AUTHENTICATED
U.S. GOVERNMENT
INFORMATION
GPO

Title 42—Public Health

(This book contains parts 1 to 399)

Part

CHAPTER I—Public Health Service, Department of Health and Human Services 2
CHAPTERS II-III [Reserved]

CHAPTER I—PUBLIC HEALTH SERVICE, DEPARTMENT OF HEALTH AND HUMAN SERVICES

EDITORIAL NOTE: Nomenclature changes to chapter I appear at 67 FR 36549, May 24, 2002.

SUBCHAPTER A—GENERAL PROVISIONS

Part		*Page*
1	[Reserved]	
2	Confidentiality of alcohol and drug abuse patient records	9
2a	Protection of identity—research subjects	28
3	Patient safety organizations and patient safety work product	33
4	National Library of Medicine	65
5	Designation of health professional(s) shortage areas	67
5a	Rural physician training grant program	85
6	Federal tort claims act coverage of certain grantees and individuals	85
7	Distribution of reference biological standards and biological preparations	87
8	Certification of opioid treatment programs	88
9	Standards of care for chimpanzees held in the federally supported sanctuary system	109

SUBCHAPTER B—PERSONNEL

21	Commissioned officers	123
22	Personnel other than commissioned officers	133
23	National Health Service Corps	134
24	Senior Biomedical Research Service	143

SUBCHAPTER C—MEDICAL CARE AND EXAMINATIONS

31	Medical care for certain personnel of the Coast Guard, National Ocean Survey, Public Health Service, and former Lighthouse Service	147

Part		Page
32	Medical care for persons with Hansen's disease and other persons in emergencies	152
34	Medical examination of aliens	153
35	Hospital and station management	160
37	Specifications for medical examinations of underground coal miners	169
38	Disaster assistance for crisis counseling and training	181
	SUBCHAPTER D—GRANTS	
50	Policies of general applicability	186
51	Requirements applicable to the protection and advocacy for individuals with mental illness program	199
51a	Project grants for maternal and child health	211
51b	Project grants for preventive health services	214
51c	Grants for community health services	221
51d	Mental health and substance abuse emergency response procedures	236
51e–51g	[Reserved]	
52	Grants for research projects	241
52a	National Institutes of Health center grants	245
52b	National Institutes of Health construction grants	250
52c	Minority Biomedical Research Support Program	259
52d	National Cancer Institute Clinical Cancer Education Program	261
52e	National Heart, Lung, and Blood Institute grants for prevention and control projects	264
52h	Scientific peer review of research grant applications and research and development contract projects	267
53	Grants, loans and loan guarantees for construction and modernization of hospitals and medical facilities	273
54	Charitable Choice regulations applicable to States receiving Substance Abuse Prevention and Treatment block grants and/or Projects for Assistance in Transition from Homelessness grants	281
54a	Charitable Choice regulations applicable to States, local governments and religious organizations receiving discretionary funding under Title V of the Public Health Service Act, 42 U.S.C. 290aa, et seq., for substance abuse prevention and treatment services	284
55a	Program grants for Black Lung clinics	289
56	Grants for migrant health services	291

Part		Page
57	Grants for construction of teaching facilities, educational improvements, scholarships and student loans	311
58	Grants for training of public health and allied health personnel	353
59	Grants for family planning services	353
59a	National Library of Medicine grants	362
60	Health Education Assistance Loan Program	366
	SUBCHAPTER E—FELLOWSHIPS, INTERNSHIPS, TRAINING	
61	Fellowships	398
62	National Health Service Corps Scholarship and Loan Repayment Programs	403
63	Traineeships	421
63a	National Institutes of Health training grants	424
64	National Library of Medicine training grants	428
64a	Obligated service for mental health traineeships	430
65	National Institute of Environmental Health Sciences hazardous waste worker training	434
65a	National Institute of Environmental Health Sciences hazardous substances basic research and training grants	437
66	National Research Service Awards	441
67	Agency for Health Care Policy and Research grants and contracts	448
68a	National Institutes of Health (NIH) Clinical Research Loan Repayment Program for Individuals from Disadvantaged Backgrounds (CR-LRP)	458
68c	National Institute of Child Health and Human Development Contraception and Infertility Research Loan Repayment Program	463
	SUBCHAPTER F—QUARANTINE, INSPECTION, LICENSING	
70	Interstate quarantine	469
71	Foreign quarantine	471
72	[Reserved]	
73	Select agents and toxins	482
75	Standards for the accreditation of educational programs for and the credentialing of radiologic personnel	497
	SUBCHAPTER G—OCCUPATIONAL SAFETY AND HEALTH RESEARCH AND RELATED ACTIVITIES	
80	Administrative functions, practices, and procedures	511

Part		Page
81	Guidelines for determining probability of causation under the energy employees occupational illness compensation program act of 2000.	512
82	Methods for conducting dose reconstruction under the Energy Employees Occupational Illness Compensation Program Act of 2000	519
83	Procedures for designating classes of employees as members of the special exposure cohort under the Energy Employees Occupational Illness Compensation Program Act of 2000	530
84	Approval of respiratory protective devices	542
85	Requests for health hazard evaluations	606
85a	Occupational safety and health investigations of places of employment	611
86	Grants for education programs in occupational safety and health	616
87	National Institute for Occupational Safety and Health Research and demonstration grants	624

SUBCHAPTER H—HEALTH ASSESSMENTS AND HEALTH EFFECTS STUDIES OF HAZARDOUS SUBSTANCES RELEASES AND FACILITIES

90	Administrative functions, practices, and procedures	627
93	Public health service policies on research misconduct	631

SUBCHAPTER I [RESERVED]

SUBCHAPTER J—VACCINES

100	Vaccine injury compensation	660
102	Smallpox compensation program	665
110	[Reserved]	

SUBCHAPTER K—HEALTH RESOURCES DEVELOPMENT

121	Organ Procurement and Transplantation Network	693
124	Medical facility construction and modernization	704
125–129	[Reserved]	

SUBCHAPTER L—COMPASSIONATE PAYMENTS

130	Ricky Ray Hemophilia Relief Fund Program	740
131–135	[Reserved]	

SUBCHAPTER M—INDIAN HEALTH SERVICE, DEPARTMENT OF HEALTH AND HUMAN SERVICES

136	Indian health	773
136a	Indian health	807
137	Tribal self-governance	815

Public Health Service, HHS

Part *Page*
138–199 [Reserved]

SUBCHAPTER A—GENERAL PROVISIONS

PART 1 [RESERVED]

PART 2—CONFIDENTIALITY OF ALCOHOL AND DRUG ABUSE PATIENT RECORDS

Subpart A—Introduction

Sec.
2.1 Statutory authority for confidentiality of drug abuse patient records.
2.2 Statutory authority for confidentiality of alcohol abuse patient records.
2.3 Purpose and effect.
2.4 Criminal penalty for violation.
2.5 Reports of violations.

Subpart B—General Provisions

2.11 Definitions.
2.12 Applicability.
2.13 Confidentiality restrictions.
2.14 Minor patients.
2.15 Incompetent and deceased patients.
2.16 Security for written records.
2.17 Undercover agents and informants.
2.18 Restrictions on the use of identification cards.
2.19 Disposition of records by discontinued programs.
2.20 Relationship to State laws.
2.21 Relationship to Federal statutes protecting research subjects against compulsory disclosure of their identity.
2.22 Notice to patients of Federal confidentiality requirements.
2.23 Patient access and restrictions on use.

Subpart C—Disclosures With Patient's Consent

2.31 Form of written consent.
2.32 Prohibition on redisclosure.
2.33 Disclosures permitted with written consent.
2.34 Disclosures to prevent multiple enrollments in detoxification and maintenance treatment programs.
2.35 Disclosures to elements of the criminal justice system which have referred patients.

Subpart D—Disclosures Without Patient Consent

2.51 Medical emergencies.
2.52 Research activities.
2.53 Audit and evaluation activities.

Subpart E—Court Orders Authorizing Disclosure and Use

2.61 Legal effect of order.
2.62 Order not applicable to records disclosed without consent to researchers, auditors and evaluators.
2.63 Confidential communications.
2.64 Procedures and criteria for orders authorizing disclosures for noncriminal purposes.
2.65 Procedures and criteria for orders authorizing disclosure and use of records to criminally investigate or prosecute patients.
2.66 Procedures and criteria for orders authorizing disclosure and use of records to investigate or prosecute a program or the person holding the records.
2.67 Orders authorizing the use of undercover agents and informants to criminally investigate employees or agents of a program.

AUTHORITY: Sec. 408 of Pub. L. 92–255, 86 Stat. 79, as amended by sec. 303 (a), (b) of Pub L. 93–282, 83 Stat. 137, 138; sec. 4(c)(5)(A) of Pub. L. 94–237, 90 Stat. 244; sec. 111(c)(3) of Pub. L. 94–581, 90 Stat. 2852; sec. 509 of Pub. L. 96–88, 93 Stat. 695; sec. 973(d) of Pub. L. 97–35, 95 Stat. 598; and transferred to sec. 527 of the Public Health Service Act by sec. 2(b)(16)(B) of Pub. L. 98–24, 97 Stat. 182 and as amended by sec. 106 of Pub. L. 99–401, 100 Stat. 907 (42 U.S.C. 290ee–3) and sec. 333 of Pub. L. 91–616, 84 Stat. 1853, as amended by sec. 122(a) of Pub. L. 93–282, 88 Stat. 131; and sec. 111(c)(4) of Pub. L. 94–581, 90 Stat. 2852 and transferred to sec. 523 of the Public Health Service Act by sec. 2(b)(13) of Pub. L. 98–24, 97 Stat. 181 and as amended by sec. 106 of Pub. L. 99–401, 100 Stat. 907 (42 U.S.C. 290dd–3), as amended by sec. 131 of Pub. L. 102–321, 106 Stat. 368, (42 U.S.C. 290dd–2).

SOURCE: 52 FR 21809, June 9, 1987, unless otherwise noted.

Subpart A—Introduction

§ 2.1 Statutory authority for confidentiality of drug abuse patient records.

The restrictions of these regulations upon the disclosure and use of drug abuse patient records were initially authorized by section 408 of the Drug Abuse Prevention, Treatment, and Rehabilitation Act (21 U.S.C. 1175). That section as amended was transferred by Pub. L. 98–24 to section 527 of the Public Health Service Act which is codified

at 42 U.S.C. 290ee–3. The amended statutory authority is set forth below:

§ 290ee–3. CONFIDENTIALITY OF PATIENT RECORDS.

(a) *Disclosure authorization*

Records of the identity, diagnosis, prognosis, or treatment of any patient which are maintained in connection with the performance of any drug abuse prevention function conducted, regulated, or directly or indirectly assisted by any department or agency of the United States shall, except as provided in subsection (e) of this section, be confidential and be disclosed only for the purposes and under the circumstances expressly authorized under subsection (b) of this section.

(b) *Purposes and circumstances of disclosure affecting consenting patient and patient regardless of consent*

(1) The content of any record referred to in subsection (a) of this section may be disclosed in accordance with the prior written consent of the patient with respect to whom such record is maintained, but only to such extent, under such circumstances, and for such purposes as may be allowed under regulations prescribed pursuant to subsection (g) of this section.

(2) Whether or not the patient, with respect to whom any given record referred to in subsection (a) of this section is maintained, gives his written consent, the content of such record may be disclosed as follows:

(A) To medical personnel to the extent necessary to meet a bona fide medical emergency.

(B) To qualified personnel for the purpose of conducting scientific research, management audits, financial audits, or program evaluation, but such personnel may not identify, directly or indirectly, any individual patient in any report of such research, audit, or evaluation, or otherwise disclose patient identities in any manner.

(C) If authorized by an appropriate order of a court of competent jurisdiction granted after application showing good cause therefor. In assessing good cause the court shall weigh the public interest and the need for disclosure against the injury to the patient, to the physician-patient relationship, and to the treatment services. Upon the granting of such order, the court, in determining the extent to which any disclosure of all or any part of any record is necessary, shall impose appropriate safeguards against unauthorized disclosure.

(c) *Prohibition against use of record in making criminal charges or investigation of patient*

Except as authorized by a court order granted under subsection (b)(2)(C) of this section, no record referred to in subsection (a) of this section may be used to initiate or substantiate any criminal charges against a patient or to conduct any investigation of a patient.

(d) *Continuing prohibition against disclosure irrespective of status as patient*

The prohibitions of this section continue to apply to records concerning any individual who has been a patient, irrespective of whether or when he ceases to be a patient.

(e) *Armed Forces and Veterans' Administration; interchange of records; report of suspected child abuse and neglect to State or local authorities*

The prohibitions of this section do not apply to any interchange of records—

(1) within the Armed Forces or witrhin those components of the Veterans' Administration furnishing health care to veterans, or

(2) between such components and the Armed Forces.

The prohibitions of this section do not apply to the reporting under State law of incidents of suspected child abuse and neglect to the appropriate State or local authorities.

(f) *Penalty for first and subsequent offenses*

Any person who violates any provision of this section or any regulation issued pursuant to this section shall be fined not more than $500 in the case of a first offense, and not nore than $5,000 in the case of each subsequent offense.

(g) *Regulations; interagency consultations; definitions, safeguards, and procedures, including procedures and criteria for issuance and scope of orders*

Except as provided in subsection (h) of this section, the Secretary, after consultation with the Administrator of Veterans' Affairs and the heads of other Federal departments and agencies substantially affected thereby, shall prescribe regulations to carry out the purposes of this section. These regulations may contain such definitions, and may provide for such safeguards and procedures, including procedures and criteria for the issuance and scope of orders under subsection (b)(2)(C) of this section, as in the judgment of the Secretary are necessary or proper to effectuate the purposes of this section, to prevent circumvention or evasion thereof, or to facilitate compliance therewith.

(Subsection (h) was superseded by section 111(c)(3) of Pub. L. 94–581. The responsibility of the Administrator of Veterans' Affairs to write regulations to provide for confidentiality of drug abuse patient records under Title 38 was moved from 21 U.S.C. 1175 to 38 U.S.C. 4134.)

§ 2.2 Statutory authority for confidentiality of alcohol abuse patient records.

The restrictions of these regulations upon the disclosure and use of alcohol

abuse patient records were initially authorized by section 333 of the Comprehensive Alcohol Abuse and Alcoholism Prevention, Treatment, and Rehabilitation Act of 1970 (42 U.S.C. 4582). The section as amended was transferred by Pub. L. 98–24 to section 523 of the Public Health Service Act which is codified at 42 U.S.C. 290dd–3. The amended statutory authority is set forth below:

§290dd–3. CONFIDENTIALITY OF PATIENT RECORDS

(a) *Disclosure authorization*

Records of the identity, diagnosis, prognosis, or treatment of any patient which are maintained in connection with the performance of any program or activity relating to alcoholism or alcohol abuse education, training, treatment, rehabilitation, or research, which is conducted, regulated, or directly or indirectly assisted by any department or agency of the United States shall, except as provided in subsection (e) of this section, be confidential and be disclosed only for the purposes and under the circumstances expressly authorized under subsection (b) of this section.

(b) *Purposes and circumstances of disclosure affecting consenting patient and patient regardless of consent*

(1) The content of any record referred to in subsection (a) of this section may be disclosed in accordance with the prior written consent of the patient with respect to whom such record is maintained, but only to such extent, under such circumstances, and for such purposes as may be allowed under regulations prescribed pursuant to subsection (g) of this section.

(2) Whether or not the patient, with respect to whom any given record referred to in subsection (a) of this section is maintained, gives his written consent, the content of such record may be disclosed as follows:

(A) To medical personnel to the extent necessary to meet a bona fide medical emergency.

(B) To qualified personnel for the purpose of conducting scientific research, management audits, financial audits, or program evaluation, but such personnel may not identify, directly or indirectly, any individual patient in any report of such research, audit, or evaluation, or otherwise disclose patient identities in any manner.

(C) If authorized by an appropriate order of a court of competent jurisdiction granted after application showing good cause therefor. In assessing good cause the court shall weigh the public interest and the need for disclosure against the injury to the patient, to the physician-patient relationship, and to the treatment services. Upon the granting of such order, the court, in determining the extent to which any disclosure of all or any part of any record is necessary, shall impose appropriate safeguards against unauthorized disclosure.

(c) *Prohibition against use of record in making criminal charges or investigation of patient*

Except as authorized by a court order granted under subsection (b)(2)(C) of this section, no record referred to in subsection (a) of this section may be used to initiate or substantiate any criminal charges against a patient or to conduct any investigation of a patient.

(d) *Continuing prohibition against disclosure irrespective of status as patient*

The prohibitions of this section continue to apply to records concerning any individual who has been a patient, irrespective of whether or when he ceases to be a patient.

(e) *Armed Forces and Veterans' Administration; interchange of record of suspected child abuse and neglect to State or local authorities*

The prohibitions of this section do not apply to any interchange of records—

(1) within the Armed Forces or within those components of the Veterans' Administration furnishing health care to veterans, or

(2) between such components and the Armed Forces.

The prohibitions of this section do not apply to the reporting under State law of incidents of suspected child abuse and neglect to the appropriate State or local authorities.

(f) *Penalty for first and subsequent offenses*

Any person who violates any provision of this section or any regulation issued pursuant to this section shall be fined not more than $500 in the case of a first offense, and not more than $5,000 in the case of each subsequent offense.

(g) *Regulations of Secretary; definitions, safeguards, and procedures, including procedures and criteria for issuance and scope of orders*

Except as provided in subsection (h) of this section, the Secretary shall prescribe regulations to carry out the purposes of this section. These regulations may contain such definitions, and may provide for such safeguards and procedures, including procedures and criteria for the issuance and scope of orders under subsection(b)(2)(C) of this section, as in the judgment of the Secretary are necessary or proper to effectuate the purposes of this section, to prevent circumvention or evasion thereof, or to facilitate compliance therewith.

(Subsection (h) was superseded by section 111(c)(4) of Pub. L. 94–581. The responsibility of the Administrator of Veterans' Affairs to write regulations to provide for confidentiality of alcohol abuse patient records under Title 38 was moved from 42 U.S.C. 4582 to 38 U.S.C. 4134.)

§ 2.3 Purpose and effect.

(a) *Purpose*. Under the statutory provisions quoted in §§ 2.1 and 2.2, these regulations impose restrictions upon the disclosure and use of alcohol and drug abuse patient records which are maintained in connection with the performance of any federally assisted alcohol and drug abuse program. The regulations specify:

(1) Definitions, applicability, and general restrictions in subpart B (definitions applicable to § 2.34 only appear in that section);

(2) Disclosures which may be made with written patient consent and the form of the written consent in subpart C;

(3) Disclosures which may be made without written patient consent or an authorizing court order in subpart D; and

(4) Disclosures and uses of patient records which may be made with an authorizing court order and the procedures and criteria for the entry and scope of those orders in subpart E.

(b) *Effect*. (1) These regulations prohibit the disclosure and use of patient records unless certain circumstances exist. If any circumstances exists under which disclosure is permitted, that circumstance acts to remove the prohibition on disclosure but it does not compel disclosure. Thus, the regulations do not require disclosure under any circumstances.

(2) These regulations are not intended to direct the manner in which substantive functions such as research, treatment, and evaluation are carried out. They are intended to insure that an alcohol or drug abuse patient in a federally assisted alcohol or drug abuse program is not made more vulnerable by reason of the availability of his or her patient record than an individual who has an alcohol or drug problem and who does not seek treatment.

(3) Because there is a criminal penalty (a fine—see 42 U.S.C. 290ee–3(f), 42 U.S.C. 290dd–3(f) and 42 CFR 2.4) for violating the regulations, they are to be construed strictly in favor of the potential violator in the same manner as a criminal statute (see *M. Kraus & Brothers* v. *United States*, 327 U.S. 614, 621–22, 66 S. Ct. 705, 707–08 (1946)).

§ 2.4 Criminal penalty for violation.

Under 42 U.S.C. 290ee–3(f) and 42 U.S.C. 290dd–3(f), any person who violates any provision of those statutes or these regulations shall be fined not more than $500 in the case of a first offense, and not more than $5,000 in the case of each subsequent offense.

§ 2.5 Reports of violations.

(a) The report of any violation of these regulations may be directed to the United States Attorney for the judicial district in which the violation occurs.

(b) The report of any violation of these regulations by a methadone program may be directed to the Regional Offices of the Food and Drug Administration.

Subpart B—General Provisions

§ 2.11 Definitions.

For purposes of these regulations:

Alcohol abuse means the use of an alcoholic beverage which impairs the physical, mental, emotional, or social well-being of the user.

Drug abuse means the use of a psychoactive substance for other than medicinal purposes which impairs the physical, mental, emotional, or social well-being of the user.

Diagnosis means any reference to an individual's alcohol or drug abuse or to a condition which is identified as having been caused by that abuse which is made for the purpose of treatment or referral for treatment.

Disclose or disclosure means a communication of patient indentifying information, the affirmative verification of another person's communication of patient identifying information, or the communication of any information from the record of a patient who has been identified.

Informant means an individual:

(a) Who is a patient or employee of a program or who becomes a patient or employee of a program at the request of a law enforcement agency or official: and

(b) Who at the request of a law enforcement agency or official observes one or more patients or employees of

the program for the purpose of reporting the information obtained to the law enforcement agency or official.

Patient means any individual who has applied for or been given diagnosis or treatment for alcohol or drug abuse at a federally assisted program and includes any individual who, after arrest on a criminal charge, is identified as an alcohol or drug abuser in order to determine that individual's eligibility to participate in a program.

Patient identifying information means the name, address, social security number, fingerprints, photograph, or similar information by which the identity of a patient can be determined with reasonable accuracy and speed either directly or by reference to other publicly available information. The term does not include a number assigned to a patient by a program, if that number does not consist of, or contain numbers (such as a social security, or driver's license number) which could be used to identify a patient with reasonable accuracy and speed from sources external to the program.

Person means an individual, partnership, corporation, Federal, State or local government agency, or any other legal entity.

Program means:

(a) An individual or entity (other than a general medical care facility) who holds itself out as providing, and provides, alcohol or drug abuse diagnosis, treatment or referral for treatment; or

(b) An identified unit within a general medical facility which holds itself out as providing, and provides, alcohol or drug abuse diagnosis, treatment or referral for treatment; or

(c) Medical personnel or other staff in a general medical care facility whose primary function is the provision of alcohol or drug abuse diagnosis, treatment or referral for treatment and who are identified as such providers. (See §2.12(e)(1) for examples.)

Program director means:

(a) In the case of a program which is an individual, that individual:

(b) In the case of a program which is an organization, the individual designated as director, managing director, or otherwise vested with authority to act as chief executive of the organization.

Qualified service organization means a person which:

(a) Provides services to a program, such as data processing, bill collecting, dosage preparation, laboratory analyses, or legal, medical, accounting, or other professional services, or services to prevent or treat child abuse or neglect, including training on nutrition and child care and individual and group therapy, and

(b) Has entered into a written agreement with a program under which that person:

(1) Acknowledges that in receiving, storing, processing or otherwise dealing with any patient records from the progams, it is fully bound by these regulations; and

(2) If necessary, will resist in judicial proceedings any efforts to obtain access to patient records except as permitted by these regulations.

Records means any information, whether recorded or not, relating to a patient received or acquired by a federally assisted alcohol or drug program.

Third party payer means a person who pays, or agrees to pay, for diagnosis or treatment furnished to a patient on the basis of a contractual relationship with the patient or a member of his family or on the basis of the patient's eligibility for Federal, State, or local governmental benefits.

Treatment means the management and care of a patient suffering from alcohol or drug abuse, a condition which is identified as having been caused by that abuse, or both, in order to reduce or eliminate the adverse effects upon the patient.

Undercover agent means an officer of any Federal, State, or local law enforcement agency who enrolls in or becomes an employee of a program for the purpose of investigating a suspected violation of law or who pursues that purpose after enrolling or becoming employed for other purposes.

[52 FR 21809, June 9, 1987, as amended by 60 FR 22297, May 5, 1995]

§2.12 Applicability.

(a) *General*—(1) *Restrictions on disclosure.* The restrictions on disclosure in

these regulations apply to any information, whether or not recorded, which:

(i) Would identify a patient as an alcohol or drug abuser either directly, by reference to other publicly available information, or through verification of such an identification by another person; and

(ii) Is drug abuse information obtained by a federally assisted drug abuse program after March 20, 1972, or is alcohol abuse information obtained by a federally assisted alcohol abuse program after May 13, 1974 (or if obtained before the pertinent date, is maintained by a federally assisted alcohol or drug abuse program after that date as part of an ongoing treatment episode which extends past that date) for the purpose of treating alcohol or drug abuse, making a diagnosis for that treatment, or making a referral for that treatment.

(2) *Restriction on use.* The restriction on use of information to initiate or substantiate any criminal charges against a patient or to conduct any criminal investigation of a patient (42 U.S.C. 290ee–3(c), 42 U.S.C. 290dd–3(c)) applies to any information, whether or not recorded which is drug abuse information obtained by a federally assisted drug abuse program after March 20, 1972, or is alcohol abuse information obtained by a federally assisted alcohol abuse program after May 13, 1974 (or if obtained before the pertinent date, is maintained by a federally assisted alcohol or drug abuse program after that date as part of an ongoing treatment episode which extends past that date), for the purpose of treating alcohol or drug abuse, making a diagnosis for the treatment, or making a referral for the treatment.

(b) *Federal assistance.* An alcohol abuse or drug abuse program is considered to be federally assisted if:

(1) It is conducted in whole or in part, whether directly or by contract or otherwise by any department or agency of the United States (but see paragraphs (c)(1) and (c)(2) of this section relating to the Veterans' Administration and the Armed Forces);

(2) It is being carried out under a license, certification, registration, or other authorization granted by any department or agency of the United States including but not limited to:

(i) Certification of provider status under the Medicare program;

(ii) Authorization to conduct methadone maintenance treatment (see 21 CFR 291.505); or

(iii) Registration to dispense a substance under the Controlled Substances Act to the extent the controlled substance is used in the treatment of alcohol or drug abuse;

(3) It is supported by funds provided by any department or agency of the United States by being:

(i) A recipient of Federal financial assistance in any form, including financial assistance which does not directly pay for the alcohol or drug abuse diagnosis, treatment, or referral activities; or

(ii) Conducted by a State or local government unit which, through general or special revenue sharing or other forms of assistance, receives Federal funds which could be (but are not necessarily) spent for the alcohol or drug abuse program; or

(4) It is assisted by the Internal Revenue Service of the Department of the Treasury through the allowance of income tax deductions for contributions to the program or through the granting of tax exempt status to the program.

(c) *Exceptions*—(1) *Veterans' Administration.* These regulations do not apply to information on alcohol and drug abuse patients maintained in connection with the Veterans' Administration provisions of hospital care, nursing home care, domiciliary care, and medical services under title 38, United States Code. Those records are governed by 38 U.S.C. 4132 and regulations issued under that authority by the Administrator of Veterans' Affairs.

(2) *Armed Forces.* These regulations apply to any information described in paragraph (a) of this section which was obtained by any component of the Armed Forces during a period when the patient was subject to the Uniform Code of Military Justice except:

(i) Any interchange of that information within the Armed Forces; and

(ii) Any interchange of that information between the Armed Forces and

those components of the Veterans Administration furnishing health care to veterans.

(3) *Communication within a program or between a program and an entity having direct administrative control over that program.* The restrictions on disclosure in these regulations do not apply to communications of information between or among personnel having a need for the information in connection with their duties that arise out of the provision of diagnosis, treatment, or referral for treatment of alcohol or drug abuse if the communications are

(i) Within a program or

(ii) Between a program and an entity that has direct administrative control over the program.

(4) *Qualified Service Organizations.* The restrictions on disclosure in these regulations do not apply to communications between a program and a qualified service organization of information needed by the organization to provide services to the program.

(5) *Crimes on program premises or against program personnel.* The restrictions on disclosure and use in these regulations do not apply to communications from program personnel to law enforcement officers which—

(i) Are directly related to a patient's commission of a crime on the premises of the program or against program personnel or to a threat to commit such a crime; and

(ii) Are limited to the circumstances of the incident, including the patient status of the individual committing or threatening to commit the crime, that individual's name and address, and that individual's last known whereabouts.

(6) *Reports of suspected child abuse and neglect.* The restrictions on disclosure and use in these regulations do not apply to the reporting under State law of incidents of suspected child abuse and neglect to the appropriate State or local authorities. However, the restrictions continue to apply to the original alcohol or drug abuse patient records maintained by the program including their disclosure and use for civil or criminal proceedings which may arise out of the report of suspected child abuse and neglect.

(d) *Applicability to recipients of information*—(1) *Restriction on use of information.* The restriction on the use of any information subject to these regulations to initiate or substantiate any criminal charges against a patient or to conduct any criminal investigation of a patient applies to any person who obtains that information from a federally assisted alcohol or drug abuse program, regardless of the status of the person obtaining the information or of whether the information was obtained in accordance with these regulations. This restriction on use bars, among other things, the introduction of that information as evidence in a criminal proceeding and any other use of the information to investigate or prosecute a patient with respect to a suspected crime. Information obtained by undercover agents or informants (see §2.17) or through patient access (see §2.23) is subject to the restriction on use.

(2) *Restrictions on disclosures—Third party payers, administrative entities, and others.* The restrictions on disclosure in these regulations apply to:

(i) Third party payers with regard to records disclosed to them by federally assisted alcohol or drug abuse programs;

(ii) Entities having direct administrative control over programs with regard to information communicated to them by the program under §2.12(c)(3); and

(iii) Persons who receive patient records directly from a federally assisted alcohol or drug abuse program and who are notified of the restrictions on redisclosure of the records in accordance with §2.32 of these regulations.

(e) *Explanation of applicability*—(1) *Coverage.* These regulations cover any information (including information on referral and intake) about alcohol and drug abuse patients obtained by a program (as the terms ''patient'' and ''program'' are defined in §2.11) if the program is federally assisted in any manner described in §2.12(b). Coverage includes, but is not limited to, those treatment or rehabilitation programs, employee assistance programs, programs within general hospitals, school-based programs, and private practitioners who hold themselves out as

providing, and provide alcohol or drug abuse diagnosis, treatment, or referral for treatment. However, these regulations would not apply, for example, to emergency room personnel who refer a patient to the intensive care unit for an apparent overdose, unless the primary function of such personnel is the provision of alcohol or drug abuse diagnosis, treatment or referral and they are identified as providing such services or the emergency room has promoted itself to the community as a provider of such services.

(2) *Federal assistance to program required*. If a patient's alcohol or drug abuse diagnosis, treatment, or referral for treatment is not provided by a program which is federally conducted, regulated or supported in a manner which constitutes Federal assistance under § 2.12(b), that patient's record is not covered by these regulations. Thus, it is possible for an individual patient to benefit from Federal support and not be covered by the confidentiality regulations because the program in which the patient is enrolled is not federally assisted as defined in § 2.12(b). For example, if a Federal court placed an individual in a private for-profit program and made a payment to the program on behalf of that individual, that patient's record would not be covered by these regulations unless the program itself received Federal assistance as defined by § 2.12(b).

(3) *Information to which restrictions are applicable*. Whether a restriction is on use or disclosure affects the type of information which may be available. The restrictions on disclosure apply to any information which would identify a patient as an alcohol or drug abuser. The restriction on use of information to bring criminal charges against a patient for a crime applies to any information obtained by the program for the purpose of diagnosis, treatment, or referral for treatment of alcohol or drug abuse. (Note that restrictions on use and disclosure apply to recipients of information under § 2.12(d).)

(4) *How type of diagnosis affects coverage*. These regulations cover any record of a diagnosis identifying a patient as an alcohol or drug abuser which is prepared in connection with the treatment or referral for treatment of alcohol or drug abuse. A diagnosis prepared for the purpose of treatment or referral for treatment but which is not so used is covered by these regulations. The following are not covered by these regulations:

(i) Diagnosis which is made solely for the purpose of providing evidence for use by law enforcement authorities; or

(ii) A diagnosis of drug overdose or alcohol intoxication which clearly shows that the individual involved is not an alcohol or drug abuser (e.g., involuntary ingestion of alcohol or drugs or reaction to a prescribed dosage of one or more drugs).

[52 FR 21809, June 9, 1987; 52 FR 42061, Nov. 2, 1987, as amended at 60 FR 22297, May 5, 1995]

§ 2.13 Confidentiality restrictions.

(a) *General*. The patient records to which these regulations apply may be disclosed or used only as permitted by these regulations and may not otherwise be disclosed or used in any civil, criminal, administrative, or legislative proceedings conducted by any Federal, State, or local authority. Any disclosure made under these regulations must be limited to that information which is necessary to carry out the purpose of the disclosure.

(b) *Unconditional compliance required*. The restrictions on disclosure and use in these regulations apply whether the holder of the information believes that the person seeking the information already has it, has other means of obtaining it, is a law enforcement or other official, has obtained a subpoena, or asserts any other justification for a disclosure or use which is not permitted by these regulations.

(c) *Acknowledging the presence of patients: Responding to requests*. (1) The presence of an identified patient in a facility or component of a facility which is publicly identified as a place where only alcohol or drug abuse diagnosis, treatment, or referral is provided may be acknowledged only if the patient's written consent is obtained in accordance with subpart C of these regulations or if an authorizing court order is entered in accordance with subpart E of these regulations. The regulations permit acknowledgement of the presence of an identified patient in a facility or part of a facility if the

facility is not publicy identified as only an alcohol or drug abuse diagnosis, treatment or referral facility, and if the acknowledgement does not reveal that the patient is an alcohol or drug abuser.

(2) Any answer to a request for a disclosure of patient records which is not permissible under these regulations must be made in a way that will not affirmatively reveal that an identified individual has been, or is being diagnosed or treated for alcohol or drug abuse. An inquiring party may be given a copy of these regulations and advised that they restrict the disclosure of alcohol or drug abuse patient records, but may not be told affirmatively that the regulations restrict the disclosure of the records of an identified patient. The regulations do not restrict a disclosure that an identified individual is not and never has been a patient.

§ 2.14 Minor patients.

(a) *Definition of minor.* As used in these regulations the term ''minor'' means a person who has not attained the age of majority specified in the applicable State law, or if no age of majority is specified in the applicable State law, the age of eighteen years.

(b) *State law not requiring parental consent to treatment.* If a minor patient acting alone has the legal capacity under the applicable State law to apply for and obtain alcohol or drug abuse treatment, any written consent for disclosure authorized under subpart C of these regulations may be given only by the minor patient. This restriction includes, but is not limited to, any disclosure of patient identifying information to the parent or guardian of a minor patient for the purpose of obtaining financial reimbursement. These regulations do not prohibit a program from refusing to provide treatment until the minor patient consents to the disclosure necessary to obtain reimbursement, but refusal to provide treatment may be prohibited under a State or local law requiring the program to furnish the service irrespective of ability to pay.

(c) *State law requiring parental consent to treatment.* (1) Where State law requires consent of a parent, guardian, or other person for a minor to obtain alcohol or drug abuse treatment, any written consent for disclosure authorized under subpart C of these regulations must be given by both the minor and his or her parent, guardian, or other person authorized under State law to act in the minor's behalf.

(2) Where State law requires parental consent to treatment the fact of a minor's application for treatment may be communicated to the minor's parent, guardian, or other person authorized under State law to act in the minor's behalf only if:

(i) The minor has given written consent to the disclosure in accordance with subpart C of these regulations or

(ii) The minor lacks the capacity to make a rational choice regarding such consent as judged by the program director under paragraph (d) of this section.

(d) *Minor applicant for services lacks capacity for rational choice.* Facts relevant to reducing a threat to the life or physical well being of the applicant or any other individual may be disclosed to the parent, guardian, or other person authorized under State law to act in the minor's behalf if the program director judges that:

(1) A minor applicant for services lacks capacity because of extreme youth or mental or physical condition to make a rational decision on whether to consent to a disclosure under subpart C of these regulations to his or her parent, guardian, or other person authorized under State law to act in the minor's behalf, and

(2) The applicant's situation poses a substantial threat to the life or physical well being of the applicant or any other individual which may be reduced by communicating relevant facts to the minor's parent, guardian, or other person authorized under State law to act in the minor's behalf.

§ 2.15 Incompetent and deceased patients.

(a) *Incompetent patients other than minors*—(1) *Adjudication of incompetence.* In the case of a patient who has been adjudicated as lacking the capacity, for any reason other than insufficient age, to manage his or her own affairs, any consent which is required under these regulations may be given by the

guardian or other person authorized under State law to act in the patient's behalf.

(2) *No adjudication of incompetency.* For any period for which the program director determines that a patient, other than a minor or one who has been adjudicated incompetent, suffers from a medical condition that prevents knowing or effective action on his or her own behalf, the program director may exercise the right of the patient to consent to a disclosure under subpart C of these regulations for the sole purpose of obtaining payment for services from a third party payer.

(b) *Deceased patients*—(1) *Vital statistics.* These regulations do not restrict the disclosure of patient identifying information relating to the cause of death of a patient under laws requiring the collection of death or other vital statistics or permitting inquiry into the cause of death.

(2) *Consent by personal representative.* Any other disclosure of information identifying a deceased patient as an alcohol or drug abuser is subject to these regulations. If a written consent to the disclosure is required, that consent may be given by an executor, administrator, or other personal representative appointed under applicable State law. If there is no such appointment the consent may be given by the patient's spouse or, if none, by any responsible member of the patient's family.

§ 2.16 Security for written records.

(a) Written records which are subject to these regulations must be maintained in a secure room, locked file cabinet, safe or other similar container when not in use; and

(b) Each program shall adopt in writing procedures which regulate and control access to and use of written records which are subject to these regulations.

§ 2.17 Undercover agents and informants.

(a) *Restrictions on placement.* Except as specifically authorized by a court order granted under § 2.67 of these regulations, no program may knowingly employ, or enroll as a patient, any undercover agent or informant.

(b) *Restriction on use of information.* No information obtained by an undercover agent or informant, whether or not that undercover agent or informant is placed in a program pursuant to an authorizing court order, may be used to criminally investigate or prosecute any patient.

[52 FR 21809, June 9, 1987; 52 FR 42061, Nov. 2, 1987]

§ 2.18 Restrictions on the use of identification cards.

No person may require any patient to carry on his or her person while away from the program premises any card or other object which would identify the patient as an alcohol or drug abuser. This section does not prohibit a person from requiring patients to use or carry cards or other identification objects on the premises of a program.

§ 2.19 Disposition of records by discontinued programs.

(a) *General.* If a program discontinues operations or is taken over or acquired by another program, it must purge patient identifying information from its records or destroy the records unless—

(1) The patient who is the subject of the records gives written consent (meeting the requirements of § 2.31) to a transfer of the records to the acquiring program or to any other program designated in the consent (the manner of obtaining this consent must minimize the likelihood of a disclosure of patient identifying information to a third party); or

(2) There is a legal requirement that the records be kept for a period specified by law which does not expire until after the discontinuation or acquisition of the program.

(b) *Procedure where retention period required by law.* If paragraph (a)(2) of this section applies, the records must be:

(1) Sealed in envelopes or other containers labeled as follows: ''Records of [insert name of program] required to be maintained under [insert citation to statute, regulation, court order or other legal authority requiring that records be kept] until a date not later than [insert appropriate date]''; and

(2) Held under the restrictions of these regulations by a responsible person who must, as soon as practicable

after the end of the retention period specified on the label, destroy the records.

§ 2.20 Relationship to State laws.

The statutes authorizing these regulations (42 U.S.C. 290ee–3 and 42 U.S.C. 290dd–3) do not preempt the field of law which they cover to the exclusion of all State laws in that field. If a disclosure permitted under these regulations is prohibited under State law, neither these regulations nor the authorizing statutes may be construed to authorize any violation of that State law. However, no State law may either authorize or compel any disclosure prohibited by these regulations.

§ 2.21 Relationship to Federal statutes protecting research subjects against compulsory disclosure of their identity.

(a) *Research privilege description*. There may be concurrent coverage of patient identifying information by these regulations and by administrative action taken under: Section 303(a) of the Public Health Service Act (42 U.S.C. 242a(a) and the implementing regulations at 42 CFR part 2a); or section 502(c) of the Controlled Substances Act (21 U.S.C. 872(c) and the implementing regulations at 21 CFR 1316.21). These ''research privilege'' statutes confer on the Secretary of Health and Human Services and on the Attorney General, respectively, the power to authorize researchers conducting certain types of research to withhold from all persons not connected with the research the names and other identifying information concerning individuals who are the subjects of the research.

(b) *Effect of concurrent coverage*. These regulations restrict the disclosure and use of information about patients, while administrative action taken under the research privilege statutes and implementing regulations protects a person engaged in applicable research from being compelled to disclose any identifying characteristics of the individuals who are the subjects of that research. The issuance under subpart E of these regulations of a court order authorizing a disclosure of information about a patient does not affect an exercise of authority under these research privilege statutes. However, the research privilage granted under 21 CFR 291.505(g) to treatment programs using methadone for maintenance treatment does not protect from compulsory disclosure any imformation which is permitted to be disclosed under those regulations. Thus, if a court order entered in accordance with subpart E of these regulations authorizes a methadone maintenance treatment program to disclose certain information about its patients, that program may not invoke the research privilege under 21 CFR 291.505(g) as a defense to a subpoena for that information.

§ 2.22 Notice to patients of Federal confidentiality requirements.

(a) *Notice required*. At the time of admission or as soon threreafter as the patient is capable of rational communication, each program shall:

(1) Communicate to the patient that Federal law and regulations protect the confidentiality of alcohol and drug abuse patient records; and

(2) Give to the patient a summary in writing of the Federal law and regulations.

(b) *Required elements of written summary*. The written summary of the Federal law and regulations must include:

(1) A general description of the limited circumstances under which a program may acknowledge that an individual is present at a facility or disclose outside the program information identifying a patient as an alcohol or drug abuser.

(2) A statement that violation of the Federal law and regulations by a program is a crime and that suspected violations may be reported to appropriate authorities in accordance with these regulations.

(3) A statement that information related to a patient's commission of a crime on the premises of the program or against personnel of the program is not protected.

(4) A statement that reports of suspected child abuse and neglect made under State law to appropriate State or local authorities are not protected.

(5) A citation to the Federal law and regulations.

(c) *Program options*. The program may devise its own notice or may use the

sample notice in paragraph (d) to comply with the requirement to provide the patient with a summary in writing of the Federal law and regulations. In addition, the program may include in the written summary information concerning State law and any program policy not inconsistent with State and Federal law on the subject of confidentiality of alcohol and drug abuse patient records.

(d) *Sample notice.*

CONFIDENTIALITY OF ALCOHOL AND DRUG ABUSE PATIENT RECORDS

The confidentiality of alcohol and drug abuse patient records maintained by this program is protected by Federal law and regulations. Generally, the program may not say to a person outside the program that a patient attends the program, or disclose any information identifying a patient as an alcohol or drug abuser *Unless:*

(1) The patient consents in writing:

(2) The disclosure is allowed by a court order; or

(3) The disclosure is made to medical personnel in a medical emergency or to qualified personnel for research, audit, or program evaluation.

Violation of the Federal law and regulations by a program is a crime. Suspected violations may be reported to appropriate authorities in accordance with Federal regulations.

Federal law and regulations do not protect any information about a crime committed by a patient either at the program or against any person who works for the program or about any threat to commit such a crime.

Federal laws and regulations do not protect any information about suspected child abuse or neglect from being reported under State law to appropriate State or local authorities.

(See 42 U.S.C. 290dd–3 and 42 U.S.C. 290ee–3 for Federal laws and 42 CFR part 2 for Federal regulations.)

(Approved by the Office of Management and Budget under control number 0930–0099)

§ 2.23 Patient access and restrictions on use.

(a) *Patient access not prohibited.* These regulations do not prohibit a program from giving a patient access to his or her own records, including the opportunity to inspect and copy any records that the program maintains about the patient. The program is not required to obtain a patient's written consent or other authorization under these regulations in order to provide such access to the patient.

(b) *Restriction on use of information.* Information obtained by patient access to his or her patient record is subject to the restriction on use of his information to initiate or substantiate any criminal charges against the patient or to conduct any criminal investigation of the patient as provided for under § 2.12(d)(1).

Subpart C—Disclosures With Patient's Consent

§ 2.31 Form of written consent.

(a) *Required elements.* A written consent to a disclosure under these regulations must include:

(1) The specific name or general designation of the program or person permitted to make the disclosure.

(2) The name or title of the individual or the name of the organization to which disclosure is to be made.

(3) The name of the patient.

(4) The purpose of the disclosure.

(5) How much and what kind of information is to be disclosed.

(6) The signature of the patient and, when required for a patient who is a minor, the signature of a person authorized to give consent under § 2.14; or, when required for a patient who is incompetent or deceased, the signature of a person authorized to sign under § 2.15 in lieu of the patient.

(7) The date on which the consent is signed.

(8) A statement that the consent is subject to revocation at any time except to the extent that the program or person which is to make the disclosure has already acted in reliance on it. Acting in reliance includes the provision of treatment services in reliance on a valid consent to disclose information to a third party payer.

(9) The date, event, or condition upon which the consent will expire if not revoked before. This date, event, or condition must insure that the consent will last no longer than reasonably necessary to serve the purpose for which it is given.

(b) *Sample consent form.* The following form complies with paragraph (a) of this section, but other elements may be added.

1. I (name of patient) □ Request □ Authorize:
2. (name or general designation of program which is to make the disclosure)

3. To disclose: (kind and amount of information to be disclosed)

4. To: (name or title of the person or organization to which disclosure is to be made)

5. For (purpose of the disclosure)

6. Date (on which this consent is signed)

7. Signature of patient

8. Signature of parent or guardian (where required)

9. Signature of person authorized to sign in lieu of the patient (where required)

10. This consent is subject to revocation at any time except to the extent that the program which is to make the disclosure has already taken action in reliance on it. If not previously revoked, this consent will terminate upon: (specific date, event, or condition)

(c) *Expired, deficient, or false consent.* A disclosure may not be made on the basis of a consent which:

(1) Has expired;

(2) On its face substantially fails to conform to any of the requirements set forth in paragraph (a) of this section;

(3) Is known to have been revoked; or

(4) Is known, or through a reasonable effort could be known, by the person holding the records to be materially false.

(Approved by the Office of Management and Budget under control number 0930–0099)

§ 2.32 Prohibition on redisclosure.

Notice to accompany disclosure. Each disclosure made with the patient's written consent must be accompanied by the following written statement:

This information has been disclosed to you from records protected by Federal confidentiality rules (42 CFR part 2). The Federal rules prohibit you from making any further disclosure of this information unless further disclosure is expressly permitted by the written consent of the person to whom it pertains or as otherwise permitted by 42 CFR part 2. A general authorization for the release of medical or other information is NOT sufficient for this purpose. The Federal rules restrict any use of the information to criminally investigate or prosecute any alcohol or drug abuse patient.

[52 FR 21809, June 9, 1987; 52 FR 41997, Nov. 2, 1987]

§ 2.33 Disclosures permitted with written consent.

If a patient consents to a disclosure of his or her records under § 2.31, a program may disclose those records in accordance with that consent to any individual or organization named in the consent, except that disclosures to central registries and in connection with criminal justice referrals must meet the requirements of §§ 2.34 and 2.35, respectively.

§ 2.34 Disclosures to prevent multiple enrollments in detoxification and maintenance treatment programs.

(a) *Definitions.* For purposes of this section:

Central registry means an organization which obtains from two or more member progams patient identifying information about individuals applying for maintenance treatment or detoxification treatment for the purpose of avoiding an individual's concurrent enrollment in more than one program.

Detoxification treatment means the dispensing of a narcotic drug in decreasing doses to an individual in order to reduce or eliminate adverse physiological or psychological effects incident to withdrawal from the sustained use of a narcotic drug.

Maintenance treatment means the dispensing of a narcotic drug in the treatment of an individual for dependence upon heroin or other morphine-like drugs.

Member program means a detoxification treatment or maintenance treatment program which reports patient identifying information to a central registry and which is in the same State as that central registry or is not more than 125 miles from any border of the State in which the central registry is located.

(b) *Restrictions on disclosure.* A program may disclose patient records to a central registry or to any detoxification or maintenance treatment program not more than 200 miles away for the purpose of preventing the multiple enrollment of a patient only if:

(1) The disclosure is made when:

(i) The patient is accepted for treatment;

(ii) The type or dosage of the drug is changed; or

(iii) The treatment is interrupted, resumed or terminated.

(2) The disclosure is limited to:

(i) Patient identifying information;

(ii) Type and dosage of the drug; and

(iii) Relevant dates.

(3) The disclosure is made with the patient's written consent meeting the requirements of § 2.31, except that:

(i) The consent must list the name and address of each central registry and each known detoxification or maintenance treatment program to which a disclosure will be made; and

(ii) The consent may authorize a disclosure to any detoxification or maintenance treatment program established within 200 miles of the program after the consent is given without naming any such program.

(c) *Use of information limited to prevention of multiple enrollments.* A central registry and any detoxification or maintenance treatment program to which information is disclosed to prevent multiple enrollments may not redisclose or use patient identifying information for any purpose other than the prevention of multiple enrollments unless authorized by a court order under subpart E of these regulations.

(d) *Permitted disclosure by a central registry to prevent a multiple enrollment.* When a member program asks a central registry if an identified patient is enrolled in another member program and the registry determines that the patient is so enrolled, the registry may disclose—

(1) The name, address, and telephone number of the member program(s) in which the patient is already enrolled to the inquiring member program; and

(2) The name, address, and telephone number of the inquiring member program to the member program(s) in which the patient is already enrolled. The member programs may communicate as necessary to verify that no error has been made and to prevent or eliminate any multiple enrollment.

(e) *Permitted disclosure by a detoxification or maintenance treatment program to prevent a multiple enrollment.* A detoxification or maintenance treatment program which has received a disclosure under this section and has determined that the patient is already enrolled may communicate as necessary with the program making the disclosure to verify that no error has been made and to prevent or eliminate any multiple enrollment.

§ 2.35 Disclosures to elements of the criminal justice system which have referred patients.

(a) A program may disclose information about a patient to those persons within the criminal justice system which have made participation in the program a condition of the disposition of any criminal proceedings against the patient or of the patient's parole or other release from custody if:

(1) The disclosure is made only to those individuals within the criminal justice system who have a need for the information in connection with their duty to monitor the patient's progress (e.g., a prosecuting attorney who is withholding charges against the patient, a court granting pretrial or posttrial release, probation or parole officers responsible for supervision of the patient); and

(2) The patient has signed a written consent meeting the requirements of § 2.31 (except paragraph (a)(8) which is inconsistent with the revocation provisions of paragraph (c) of this section) and the requirements of paragraphs (b) and (c) of this section.

(b) *Duration of consent.* The written consent must state the period during which it remains in effect. This period must be reasonable, taking into account:

(1) The anticipated length of the treatment;

(2) The type of criminal proceeding involved, the need for the information in connection with the final disposition of that proceeding, and when the final disposition will occur; and

(3) Such other factors as the program, the patient, and the person(s) who will receive the disclosure consider pertinent.

(c) *Revocation of consent.* The written consent must state that it is revocable upon the passage of a specified amount of time or the occurrence of a specified,

ascertainable event. The time or occurrence upon which consent becomes revocable may be no later than the final disposition of the conditional release or other action in connection with which consent was given.

(d) *Restrictions on redisclosure and use.* A person who receives patient information under this section may redisclose and use it only to carry out that person's official duties with regard to the patient's conditional release or other action in connection with which the consent was given.

Subpart D—Disclosures Without Patient Consent

§ 2.51 Medical emergencies.

(a) *General Rule.* Under the procedures required by paragraph (c) of this section, patient identifying information may be disclosed to medical personnel who have a need for information about a patient for the purpose of treating a condition which poses an immediate threat to the health of any individual and which requires immediate medical intervention.

(b) *Special Rule.* Patient identifying information may be disclosed to medical personnel of the Food and Drug Administration (FDA) who assert a reason to believe that the health of any individual may be threatened by an error in the manufacture, labeling, or sale of a product under FDA jurisdiction, and that the information will be used for the exclusive purpose of notifying patients or their physicians of potential dangers.

(c) *Procedures.* Immediately following disclosure, the program shall document the disclosure in the patient's records, setting forth in writing:

(1) The name of the medical personnel to whom disclosure was made and their affiliation with any health care facility;

(2) The name of the individual making the disclosure;

(3) The date and time of the disclosure; and

(4) The nature of the emergency (or error, if the report was to FDA).

(Approved by the Office of Management and Budget under control number 0930–0099)

§ 2.52 Research activities.

(a) Patient identifying information may be disclosed for the purpose of conducting scientific research if the program director makes a determination that the recipient of the patient identifying information:

(1) Is qualified to conduct the research;

(2) Has a research protocol under which the patient identifying information:

(i) Will be maintained in accordance with the security requirements of § 2.16 of these regulations (or more stringent requirements); and

(ii) Will not be redisclosed except as permitted under paragraph (b) of this section; and

(3) Has provided a satisfactory written statement that a group of three or more individuals who are independent of the research project has reviewed the protocol and determined that:

(i) The rights and welfare of patients will be adequately protected; and

(ii) The risks in disclosing patient identifying information are outweighed by the potential benefits of the research.

(b) A person conducting research may disclose patient identifying information obtained under paragraph (a) of this section only back to the program from which that information was obtained and may not identify any individual patient in any report of that research or otherwise disclose patient identities.

[52 FR 21809, June 9, 1987, as amended at 52 FR 41997, Nov. 2, 1987]

§ 2.53 Audit and evaluation activities.

(a) *Records not copied or removed.* If patient records are not copied or removed, patient identifying information may be disclosed in the course of a review of records on program premises to any person who agrees in writing to comply with the limitations on redisclosure and use in paragraph (d) of this section and who:

(1) Performs the audit or evaluation activity on behalf of:

(i) Any Federal, State, or local governmental agency which provides financial assistance to the program or is

authorized by law to regulate its activities; or

(ii) Any private person which provides financial assistance to the program, which is a third party payer covering patients in the program, or which is a quality improvement organization performing a utilization or quality control review; or

(2) Is determined by the program director to be qualified to conduct the audit or evaluation activities.

(b) *Copying or removal of records.* Records containing patient identifying information may be copied or removed from program premises by any person who:

(1) Agrees in writing to:

(i) Maintain the patient identifying information in accordance with the security requirements provided in § 2.16 of these regulations (or more stringent requirements);

(ii) Destroy all the patient identifying information upon completion of the audit or evaluation; and

(iii) Comply with the limitations on disclosure and use in paragraph (d) of this section; and

(2) Performs the audit or evaluation activity on behalf of:

(i) Any Federal, State, or local governmental agency which provides financial assistance to the program or is authorized by law to regulate its activities; or

(ii) Any private person which provides financial assistance to the program, which is a third part payer covering patients in the program, or which is a quality improvement organization performing a utilization or quality control review.

(c) *Medicare or Medicaid audit or evaluation.* (1) For purposes of Medicare or Medicaid audit or evaluation under this section, audit or evaluation includes a civil or administrative investigation of the program by any Federal, State, or local agency responsible for oversight of the Medicare or Medicaid program and includes administrative enforcement, against the program by the agency, of any remedy authorized by law to be imposed as a result of the findings of the investigation.

(2) Consistent with the definition of program in § 2.11, program includes an employee of, or provider of medical services under, the program when the employee or provider is the subject of a civil investigation or administrative remedy, as those terms are used in paragraph (c)(1) of this section.

(3) If a disclosure to a person is authorized under this section for a Medicare or Medicaid audit or evaluation, including a civil investigation or administrative remedy, as those terms are used in paragraph (c)(1) of this section, then a quality improvement organization which obtains the information under paragraph (a) or (b) may disclose the information to that person but only for purposes of Medicare or Medicaid audit or evaluation.

(4) The provisions of this paragraph do not authorize the agency, the program, or any other person to disclose or use patient identifying information obtained during the audit or evaluation for any purposes other than those necessary to complete the Medicare or Medicaid audit or evaluation activity as specified in this paragraph.

(d) *Limitations on disclosure and use.* Except as provided in paragraph (c) of this section, patient identifying information disclosed under this section may be disclosed only back to the program from which it was obtained and used only to carry out an audit or evaluation purpose or to investigate or prosecute criminal or other activities, as authorized by a court order entered under § 2.66 of these regulations.

Subpart E—Court Orders Authorizing Disclosure and Use

§ 2.61 Legal effect of order.

(a) *Effect.* An order of a court of competent jurisdiction entered under this subpart is a unique kind of court order. Its only purpose is to authorize a disclosure or use of patient information which would otherwise be prohibited by 42 U.S.C. 290ee–3, 42 U.S.C. 290dd–3 and these regulations. Such an order does not compel disclosure. A subpoena or a similar legal mandate must be issued in order to compel disclosure. This mandate may be entered at the same time as and accompany an authorizing court order entered under these regulations.

(b) *Examples.* (1) A person holding records subject to these regulations receives a subpoena for those records: a response to the subpoena is not permitted under the regulations unless an authorizing court order is entered. The person may not disclose the records in response to the subpoena unless a court of competent jurisdiction enters an authorizing order under these regulations.

(2) An authorizing court order is entered under these regulations, but the person authorized does not want to make the disclosure. If there is no subpoena or other compulsory process or a subpoena for the records has expired or been quashed, that person may refuse to make the disclosure. Upon the entry of a valid subpoena or other compulsory process the person authorized to disclose must disclose, unless there is a valid legal defense to the process other than the confidentiality restrictions of these regulations.

[52 FR 21809, June 9, 1987; 52 FR 42061, Nov. 2, 1987]

§ 2.62 Order not applicable to records disclosed without consent to researchers, auditors and evaluators.

A court order under these regulations may not authorize qualified personnel, who have received patient identifying information without consent for the purpose of conducting research, audit or evaluation, to disclose that information or use it to conduct any criminal investigation or prosecution of a patient. However, a court order under § 2.66 may authorize disclosure and use of records to investigate or prosecute qualified personnel holding the records.

§ 2.63 Confidential communications.

(a) A court order under these regulations may authorize disclosure of confidential communications made by a patient to a program in the course of diagnosis, treatment, or referral for treatment only if:

(1) The disclosure is necessary to protect against an existing threat to life or of serious bodily injury, including circumstances which constitute suspected child abuse and neglect and verbal threats against third parties;

(2) The disclosure is necessary in connection with investigation or prosecution of an extremely serious crime, such as one which directly threatens loss of life or serious bodily injury, including homicide, rape, kidnapping, armed robbery, assault with a deadly weapon, or child abuse and neglect; or

(3) The disclosure is in connection with litigation or an administrative proceeding in which the patient offers testimony or other evidence pertaining to the content of the confidential communications.

(b) [Reserved]

§ 2.64 Procedures and criteria for orders authorizing disclosures for noncriminal purposes.

(a) *Application.* An order authorizing the disclosure of patient records for purposes other than criminal investigation or prosecution may be applied for by any person having a legally recognized interest in the disclosure which is sought. The application may be filed separately or as part of a pending civil action in which it appears that the patient records are needed to provide evidence. An application must use a fictitious name, such as John Doe, to refer to any patient and may not contain or otherwise disclose any patient identifying information unless the patient is the applicant or has given a written consent (meeting the requirements of these regulations) to disclosure or the court has ordered the record of the proceeding sealed from public scrunity.

(b) *Notice.* The patient and the person holding the records from whom disclosure is sought must be given:

(1) Adequate notice in a manner which will not disclose patient identifying information to other persons; and

(2) An opportunity to file a written response to the application, or to appear in person, for the limited purpose of providing evidence on the statutory and regulatory criteria for the issuance of the court order.

(c) *Review of evidence: Conduct of hearing.* Any oral argument, review of evidence, or hearing on the application must be held in the judge's chambers or in some manner which ensures that patient identifying information is not disclosed to anyone other than a party to the proceeding, the patient, or the person holding the record, unless the patient requests an open hearing in a

manner which meets the written consent requirements of these regulations. The proceeding may include an examination by the judge of the patient records referred to in the application.

(d) *Criteria for entry of order.* An order under this section may be entered only if the court determines that good cause exists. To make this determination the court must find that:

(1) Other ways of obtaining the information are not available or would not be effective; and

(2) The public interest and need for the disclosure outweigh the potential injury to the patient, the physician-patient relationship and the treatment services.

(e) *Content of order.* An order authorizing a disclosure must:

(1) Limit disclosure to those parts of the patient's record which are essential to fulfill the objective of the order;

(2) Limit disclosure to those persons whose need for information is the basis for the order; and

(3) Include such other measures as are necessary to limit disclosure for the protection of the patient, the physician-patient relationship and the treatment services; for example, sealing from public scrutiny the record of any proceeding for which disclosure of a patient's record has been ordered.

§ 2.65 Procedures and criteria for orders authorizing disclosure and use of records to criminally investigate or prosecute patients.

(a) *Application.* An order authorizing the disclosure or use of patient records to criminally investigate or prosecute a patient may be applied for by the person holding the records or by any person conducting investigative or prosecutorial activities with respect to the enforcement of criminal laws. The application may be filed separately, as part of an application for a subpoena or other compulsory process, or in a pending criminal action. An application must use a fictitious name such as John Doe, to refer to any patient and may not contain or otherwise disclose patient identifying information unless the court has ordered the record of the proceeding sealed from public scrutiny.

(b) *Notice and hearing.* Unless an order under § 2.66 is sought with an order under this section, the person holding the records must be given:

(1) Adequate notice (in a manner which will not disclose patient identifying information to third parties) of an application by a person performing a law enforcement function;

(2) An opportunity to appear and be heard for the limited purpose of providing evidence on the statutory and regulatory criteria for the issuance of the court order; and

(3) An opportunity to be represented by counsel independent of counsel for an applicant who is a person performing a law enforcement function.

(c) *Review of evidence: Conduct of hearings.* Any oral argument, review of evidence, or hearing on the application shall be held in the judge's chambers or in some other manner which ensures that patient identifying information is not disclosed to anyone other than a party to the proceedings, the patient, or the person holding the records. The proceeding may include an examination by the judge of the patient records referred to in the application.

(d) *Criteria.* A court may authorize the disclosure and use of patient records for the purpose of conducting a criminal investigation or prosecution of a patient only if the court finds that all of the following criteria are met:

(1) The crime involved is extremely serious, such as one which causes or directly threatens loss of life or serious bodily injury including homicide, rape, kidnapping, armed robbery, assault with a deadly weapon, and child abuse and neglect.

(2) There is a reasonable likelihood that the records will disclose information of substantial value in the investigation or prosecution.

(3) Other ways of obtaining the information are not available or would not be effective.

(4) The potential injury to the patient, to the physician-patient relationship and to the ability of the program to provide services to other patients is outweighed by the public interest and the need for the disclosure.

(5) If the applicant is a person performing a law enforcement function that:

(i) The person holding the records has been afforded the opportunity to be

represented by independent counsel; and

(ii) Any person holding the records which is an entity within Federal, State, or local government has in fact been represented by counsel independent of the applicant.

(e) *Content of order.* Any order authorizing a disclosure or use of patient records under this section must:

(1) Limit disclosure and use to those parts of the patient's record which are essential to fulfill the objective of the order;

(2) Limit disclosure to those law enforcement and prosecutorial officials who are responsible for, or are conducting, the investigation or prosecution, and limit their use of the records to investigation and prosecution of extremely serious crime or suspected crime specified in the application; and

(3) Include such other measures as are necessary to limit disclosure and use to the fulfillment of only that public interest and need found by the court.

[52 FR 21809, June 9, 1987; 52 FR 42061, Nov. 2, 1987]

§ 2.66 Procedures and criteria for orders authorizing disclosure and use of records to investigate or prosecute a program or the person holding the records.

(a) *Application.* (1) An order authorizing the disclosure or use of patient records to criminally or administratively investigate or prosecute a program or the person holding the records (or employees or agents of that program or person) may be applied for by any administrative, regulatory, supervisory, investigative, law enforcement, or prosecutorial agency having jurisdiction over the program's or person's activities.

(2) The application may be filed separately or as part of a pending civil or criminal action against a program or the person holding the records (or agents or employees of the program or person) in which it appears that the patient records are needed to provide material evidence. The application must use a fictitious name, such as John Doe, to refer to any patient and may not contain or otherwise disclose any patient identifying information unless the court has ordered the record of the proceeding sealed from public scrutiny or the patient has given a written consent (meeting the requirements of § 2.31 of these regulations) to that disclosure.

(b) *Notice not required.* An application under this section may, in the discretion of the court, be granted without notice. Although no express notice is required to the program, to the person holding the records, or to any patient whose records are to be disclosed, upon implementation of an order so granted any of the above persons must be afforded an opportunity to seek revocation or amendment of that order, limited to the presentation of evidence on the statutory and regulatory criteria for the issuance of the court order.

(c) *Requirements for order.* An order under this section must be entered in accordance with, and comply with the requirements of, paragraphs (d) and (e) of § 2.64 of these regulations.

(d) *Limitations on disclosure and use of patient identifying information:* (1) An order entered under this section must require the deletion of patient identifying information from any documents made available to the public.

(2) No information obtained under this section may be used to conduct any investigation or prosecution of a patient, or be used as the basis for an application for an order under § 2.65 of these regulations.

§ 2.67 Orders authorizing the use of undercover agents and informants to criminally investigate employees or agents of a program.

(a) *Application.* A court order authorizing the placement of an undercover agent or informant in a program as an employee or patient may be applied for by any law enforcement or prosecutorial agency which has reason to believe that employees or agents of the program are engaged in criminal misconduct.

(b) *Notice.* The program director must be given adequate notice of the application and an opportunity to appear and be heard (for the limited purpose of providing evidence on the statutory and regulatory criteria for the issuance of the court order), unless the application asserts a belief that:

(1) The program director is involved in the criminal activities to be investigated by the undercover agent or informant; or

(2) The program director will intentionally or unintentionally disclose the proposed placement of an undercover agent or informant to the employees or agents who are suspected of criminal activities.

(c) *Criteria.* An order under this section may be entered only if the court determines that good cause exists. To make this determination the court must find:

(1) There is reason to believe that an employee or agent of the program is engaged in criminal activity;

(2) Other ways of obtaining evidence of this criminal activity are not available or would not be effective; and

(3) The public interest and need for the placement of an undercover agent or informant in the program outweigh the potential injury to patients of the program, physician-patient relationships and the treatment services.

(d) *Content of order.* An order authorizing the placement of an undercover agent or informant in a program must:

(1) Specifically authorize the placement of an undercover agent or an informant;

(2) Limit the total period of the placement to six months;

(3) Prohibit the undercover agent or informant from disclosing any patient identifying information obtained from the placement except as necessary to criminally investigate or prosecute employees or agents of the program; and

(4) Include any other measures which are appropriate to limit any potential disruption of the program by the placement and any potential for a real or apparent breach of patient confidentiality; for example, sealing from public scrutiny the record of any proceeding for which disclosure of a patient's record has been ordered.

(e) *Limitation on use of information.* No information obtained by an undercover agent or informant placed under this section may be used to criminally investigate or prosecute any patient or as the basis for an application for an order under § 2.65 of these regulations.

PART 2a—PROTECTION OF IDENTITY—RESEARCH SUBJECTS

Sec.
2a.1 Applicability.
2a.2 Definitions.
2a.3 Application; coordination.
2a.4 Contents of application; in general.
2a.5 Contents of application; research projects in which drugs will be administered.
2a.6 Issuance of Confidentiality Certificates; single project limitation.
2a.7 Effect of Confidentiality Certificate.
2a.8 Termination.

AUTHORITY: Sec. 3(a), Pub. L. 91–513 as amended by sec. 122(b), Pub. L. 93–282; 84 Stat. 1241 (42 U.S.C. 242a(a)), as amended by 88 Stat. 132.

SOURCE: 44 FR 20384, Apr. 4, 1979, unless otherwise noted.

§ 2a.1 Applicability.

(a) Section 303(a) of the Public Health Service Act (42 U.S.C. 242a(a)) provides that ''[t]he Secretary [of Health and Human Services] may authorize persons engaged in research on mental health, including research on the use and effect of alcohol and other psychoactive drugs, to protect the privacy of individuals who are the subject of such research by withholding from all persons not connected with the conduct of such research the names or other identifying characteristics of such individuals. Persons so authorized to protect the privacy of such individuals may not be compelled in any Federal, State, or local civil, criminal, administrative, legislative, or other proceedings to identify such individuals.'' The regulations in this part establish procedures under which any person engaged in research on mental health including research on the use and effect of alcohol and other psychoactive drugs (whether or not the research is federally funded) may, subject to the exceptions set forth in paragraph (b) of this section, apply for such an authorization of confidentiality.

(b) These regulations do not apply to:

(1) Authorizations of confidentiality for research requiring an Investigational New Drug exemption under section 505(i) of the Federal Food, Drug, and Cosmetic Act (21 U.S.C. 355(i)) or to approved new drugs, such as methadone, requiring continuation of long-

term studies, records, and reports. Attention is called to 21 CFR 291.505(g) relating to authorizations of confidentiality for patient records maintained by methadone treatment programs.

(2) Authorizations of confidentiality for research which are related to law enforcement activities or otherwise within the purview of the Attorney General's authority to issue authorizations of confidentiality pursuant to section 502(c) of the Controlled Substances Act (21 U.S.C. 872(c)) and 21 CFR 1316.21.

(c) The Secretary's regulations on confidentiality of alcohol and drug abuse patient records (42 CFR part 2) and the regulations of this part may, in some instances, concurrently cover the same transaction. As explained in 42 CFR 2.24 and 2.24–1, 42 CFR part 2 restricts voluntary disclosures of information from applicable patient records while a Confidentiality Certificate issued pursuant to the regulations of this part protects a person engaged in applicable research from being compelled to disclose identifying characteristics of individuals who are the subject of such research.

§2a.2 Definitions.

(a) *Secretary* means the Secretary of Health and Human Services and any other officer or employee of the Department of Health and Human Services to whom the authority involved has been delegated.

(b) *Person* means any individual, corporation, government, or governmental subdivision or agency, business trust, partnership, association, or other legal entity.

(c) *Research* means systematic study directed toward new or fuller knowledge and understanding of the subject studied. The term includes, but is not limited to, behavioral science studies, surveys, evaluations, and clinical investigations.

(d) *Drug* has the meaning given that term by section 201(g)(1) of the Federal Food, Drug, and Cosmetic Act (21 U.S.C. 321(g)(1)).

(e) *Controlled drug* means a drug which is included in schedule I, II, III, IV, or V of part B of the Controlled Substances Act (21 U.S.C. 811–812).

(f) *Administer* refers to the direct application of a drug to the body of a human research subject, whether such application be by injection, inhalation, ingestion, or any other means, by (1) a qualified person engaged in research (or, in his or her presence, by his or her authorized agent), or (2) a research subject in accordance with instructions of a qualified person engaged in research, whether or not in the presence of a qualified person engaged in research.

(g) *Identifying characteristics* refers to the name, address, any identifying number, fingerprints, voiceprints, photographs or any other item or combination of data about a research subject which could reasonably lead directly or indirectly by reference to other information to identification of that research subject.

(h) *Psychoactive drug* means, in addition to alcohol, any drug which has as its principal action an effect on thought, mood, or behavior.

§2a.3 Application; coordination.

(a) Any person engaged in (or who intends to engage in) the research to which this part applies, who desires authorization to withhold the names and other identifying characteristics of individuals who are the subject of such research from any person or authority not connected with the conduct of such research may apply to the Office of the Director, National Institute on Drug Abuse, the Office of the Director, National Institute of Mental Health, or the Office of the Director, National Institute on Alcohol Abuse and Alcoholism, 5600 Fishers Lane, Rockville, Maryland 20857 for an authorization of confidentiality.

(b) If there is uncertainty with regard to which Institute is appropriate or if the research project falls within the purview of more than one Institute, an application need be submitted only to one Institute. Persons who are uncertain with regard to the applicability of these regulations to a particular type of research may apply for an authorization of confidentiality under the regulations of this part to one of the Institutes. Requests which are within the scope of the authorities described

in § 2a.1(b) will be forwarded to the appropriate agency for consideration and the person will be advised accordingly.

(c) An application may accompany, precede, or follow the sumission of a request for DHHS grant or contract assistance, though it is not necessary to request DHHS grant or contract assistance in order to apply for a Confidentiality Certificate. If a person has previously submitted any information required in this part in connection with a DHHS grant or contract, he or she may substitute a copy of information thus submitted, if the information is current and accurate. If a person requests a Confidentiality Certificate at the same time he or she submits an application for DHHS grant or contract assistance, the application for a Confidentiality Certificate may refer to the pertinent section(s) of the DHHS grant or contract application which provide(s) the information required to be submitted under this part. (See §§ 2a.4 and 2a.5.)

(d) A separate application is required for each research project for which an authorization of confidentiality is requested.

§ 2a.4 Contents of application; in general.

In addition to any other pertinent information which the Secretary may require, each application for an authorization of confidentiality for a research project shall contain:

(a) The name and address of the individual primarily responsible for the conduct of the research and the sponsor or institution with which he or she is affiliated, if any. Any application from a person affiliated with an institution will be considered only if it contains or is accompanied by documentation of institutional approval. This documentation may consist of a written statement signed by a responsible official of the institution or of a copy of or reference to a valid certification submitted in accordance with 45 CFR part 46.

(b) The location of the research project and a description of the facilities available for conducting the research, including the name and address of any hospital, institution, or clinical laboratory facility to be utilized in connection with the research.

(c) The names, addresses, and summaries of the scientific or other appropriate training and experience of all personnel having major responsibilities in the research project and the training and experience requirements for major positions not yet filled.

(d) An outline of the research protocol for the project including a clear and concise statement of the purpose and rationale of the research project and the general research methods to be used.

(e) The date on which research will begin or has begun and the estimated date for completion of the project.

(f) A specific request, signed by the individual primarily responsible for the conduct of the research, for authority to withhold the names and other identifying characteristics of the research subjects and the reasons supporting such request.

(g) An assurance (1) From persons making application for a Confidentiality Certificate for a research project for which DHHS grant or contract support is received or sought that they will comply with all the requirements of 45 CFR part 46, ''Protection of Human Subjects,'' or

(2) From all other persons making application that they will comply with the informed consent requirements of 45 CFR 46.103(c) and document legally effective informed consent in a manner consistent with the principles stated in 45 CFR 46.110, if it is determined by the Secretary, on the basis of information submitted by the person making application, that subjects will be placed at risk. If a modification of paragraphs (a) or (b) of 45 CFR 46.110 is to be used, as permitted under paragraph (c) of that section, the applicant will describe the proposed modification and submit it for approval by the Secretary.

(h) An assurance that if an authorization of confidentiality is given it will not be represented as an endorsement of the research project by the Secretary or used to coerce individuals to participate in the research project.

(i) An assurance that any person who is authorized by the Secretary to protect the privacy of research subjects

will use that authority to refuse to disclose identifying characteristics of research subjects in any Federal, State, or local civil, criminal, administrative, legislative, or other proceedings to compel disclosure of the identifying characteristics of research subjects.

(j) An assurance that all research subjects who participate in the project during the period the Confidentiality Certificate is in effect will be informed that:

(1) A Confidentiality Certificate has been issued;

(2) The persons authorized by the Confidentiality Certificate to protect the identity of research subjects may not be compelled to identify research subjects in any civil, criminal, administrative, legislative, or other proceedings whether Federal, State, or local;

(3) If any of the following conditions exist the Confidentiality Certificate does not authorize any person to which it applies to refuse to reveal identifying information concerning research subjects:

(i) The subject consents in writing to disclosure of identifying information,

(ii) Release is required by the Federal Food, Drug, and Cosmetic Act (21 U.S.C. 301) or regulations promulgated thereunder (title 21, Code of Federal Regulations), or

(iii) Authorized personnel of DHHS request identifying information for audit or program evaluation of a research project funded by DHHS or for investigation of DHHS grantees or contractors and their employees or agents carrying out such a project. (See §2a.7(b));

(4) The Confidentiality Certificate does not govern the voluntary disclosure of identifying characteristics of research subjects;

(5) The Confidentiality Certificate does not represent an endorsement of the research project by the Secretary.

(k) An assurance that all research subjects who enter the project after the termination of the Confidentiality Certificate will be informed that the authorization of confidentiality has ended and that the persons authorized to protect the identity of research subjects by the Confidentiality Certificate may not rely on the Certificate to refuse to disclose identifying characteristics of research subjects who were not participants in the project during the period the Certificate was in effect. (See §2a.8(c)).

§2a.5 Contents of application; research projects in which drugs will be administered.

(a) In addition to the information required by §2a.4 and any other pertinent information which the Secretary may require, each application for an authorization of confidentiality for a research project which involves the administering of a drug shall contain:

(1) Identification of the drugs to be administered in the research project and a description of the methods for such administration, which shall include a statement of the dosages to be administered to the research subjects;

(2) Evidence that individuals who administer drugs are authorized to do so under applicable Federal and State law; and

(3) In the case of a controlled drug, a copy of the Drug Enforcement Administration Certificate of Registration (BND Form 223) under which the research project will be conducted.

(b) An application for an authorization of confidentiality with respect to a research project which involves the administering of a controlled drug may include a request for exemption of persons engaged in the research from State or Federal prosecution for possession, distribution, and dispensing of controlled drugs as authorized under section 502(d) of the Controlled Substances Act (21 U.S.C. 872(d)) and 21 CFR 1316.22. If the request is in such form, and is supported by such information, as is required by 21 CFR 1316.22, the Secretary will forward it, together with his or her recommendation that such request be approved or disapproved, for the consideration of the Administrator of the Drug Enforcement Administration.

§2a.6 Issuance of Confidentiality Certificates; single project limitation.

(a) In reviewing the information provided in the application for a Confidentiality Certificate, the Secretary will take into account:

(1) The scientific or other appropriate training and experience of all personnel having major responsibilities in the research project;

(2) Whether the project constitutes bona fide ''research'' which is within the scope of the regulations of this part; and

(3) Such other factors as he or she may consider necessary and appropriate. All applications for Confidentiality Certificates shall be evaluated by the Secretary through such officers and employees of the Department and such experts or consultants engaged for this purpose as he or she determines to be appropriate.

(b) After consideration and evaluation of an application for an authorization of confidentiality, the Secretary will either issue a Confidentiality Certificate or a letter denying a Confidentiality Certificate, which will set forth the reasons for such denial, or will request additional information from the person making application. The Confidentiality Certificate will include:

(1) The name and address of the person making application;

(2) The name and address of the individual primarily responsible for conducting the research, if such individual is not the person making application;

(3) The location of the research project;

(4) A brief description of the research project;

(5) A statement that the Certificate does not represent an endorsement of the research project by the Secretary;

(6) The Drug Enforcement Administration registration number for the project, if any; and

(7) The date or event upon which the Confidentiality Certificate becomes effective, which shall not be before the later of either the commencement of the research project or the date of issuance of the Certificate, and the date or event upon which the Certificate will expire.

(c) A Confidentiality Certificate is not transferable and is effective only with respect to the names and other identifying characteristics of those individuals who are the subjects of the single research project specified in the Confidentiality Certificate. The recipient of a Confidentiality Certificate shall, within 15 days of any completion or discontinuance of the research project which occurs prior to the expiration date set forth in the Certificate, provide written notification to the Director of the Institute to which application was made. If the recipient determines that the research project will not be completed by the expiration date set forth in the Confidentiality Certificate he or she may submit a written request for an extension of the expiration date which shall include a justification for such extension and a revised estimate of the date for completion of the project. Upon approval of such a request, the Secretary will issue an amended Confidentiality Certificate.

(d) The protection afforded by a Confidentiality Certificate does not extend to significant changes in the research project as it is described in the application for such Certificate (e.g., changes in the personnel having major responsibilities in the research project, major changes in the scope or direction of the research protocol, or changes in the drugs to be administered and the persons who will administer them). The recipient of a Confidentiality Certificate shall notify the Director of the Institute to which application was made of any proposal for such a significant change by submitting an amended application for a Confidentiality Certificate in the same form and manner as an original application. On the basis of such application and other pertinent information the Secretary will either:

(1) Approve the amended application and issue an amended Confidentiality Certificate together with a Notice of Cancellation terminating original the Confidentiality Certificate in accordance with § 2a.8; or

(2) Disapprove the amended application and notify the applicant in writing that adoption of the proposed significant changes will result in the issuance of a Notice of Cancellation terminating the original Confidentiality Certificate in accordance with § 2a.8.

§ 2a.7 Effect of Confidentiality Certificate.

(a) A Confidentiality Certificate authorizes the withholding of the names and other identifying characteristics of

individuals who participate as subjects in the research project specified in the Certificate while the Certificate is in effect. The authorization applies to all persons who, in the performance of their duties in connection with the research project, have access to information which would identify the subjects of the research. Persons so authorized may not, at any time, be compelled in any Federal, State, or local civil, criminal, administrative, legislative, or other proceedings to identify the research subjects encompassed by the Certificate, except in those circumstances specified in paragraph (b) of this section.

(b) A Confidentiality Certificate granted under this part does not authorize any person to refuse to reveal the name or other identifying characteristics of any research subject in the following circumstances:

(1) The subject (or, if he or she is legally incompetent, his or her guardian) consents, in writing, to the disclosure of such information,

(2) Authorized personnel of DHHS request such information for audit or program evaluation of a research project funded by DHHS or for investigation of DHHS grantees or contractors and their employees or agents carrying out such a project. (See 45 CFR 5.71 for confidentiality standards imposed on such DHHS personnel), or

(3) Release of such information is required by the Federal Food, Drug, and Cosmetic Act (21 U.S.C. 301) or the regulations promulgated thereunder (title 21, Code of Federal Regulations).

(c) Neither a Confidentiality Certificate nor the regulations of this part govern the voluntary disclosure of identifying characteristics of research subjects.

§ 2a.8 Termination.

(a) A Confidentiality Certificate is in effect from the date of its issuance until the effective date of its termination. The effective date of termination shall be the earlier of:

(1) The expiration date set forth in the Confidentiality Certificate; or

(2) Ten days from the date of mailing a Notice of Cancellation to the applicant, pursuant to a determination by the Secretary that the research project has been completed or discontinued or that retention of the Confidentiality Certificate is otherwise no longer necessary or desirable.

(b) A Notice of Cancellation shall include: an identification of the Confidentiality Certificate to which it applies; the effective date of its termination; and the grounds for cancellation. Upon receipt of a Notice of Cancellation the applicant shall return the Confidentiality Certificate to the Secretary.

(c) Any termination of a Confidentiality Certificate pursuant to this section is operative only with respect to the names and other identifying characteristics of individuals who begin their participation as research subjects after the effective date of such termination. (See § 2a.4(k) requiring researchers to notify subjects who enter the project after the termination of the Confidentiality Certificate of termination of the Certificate). The protection afforded by a Confidentiality Certificate is permanent with respect to subjects who participated in research during any time the authorization was in effect.

PART 3—PATIENT SAFETY ORGANIZATIONS AND PATIENT SAFETY WORK PRODUCT

Subpart A—General Provisions

Sec.
3.10 Purpose.
3.20 Definitions.

Subpart B—PSO Requirements and Agency Procedures

3.102 Process and requirements for initial and continued listing of PSOs.
3.104 Secretarial actions.
3.106 Security requirements.
3.108 Correction of deficiencies, revocation, and voluntary relinquishment.
3.110 Assessment of PSO compliance.
3.112 Submissions and forms.

Subpart C—Confidentiality and Privilege Protections of Patient Safety Work Product

3.204 Privilege of patient safety work product.
3.206 Confidentiality of patient safety work product.
3.208 Continued protection of patient safety work product.

3.210 Required disclosure of patient safety work product to the Secretary.
3.212 Nonidentification of patient safety work product.

Subpart D—Enforcement Program

3.304 Principles for achieving compliance.
3.306 Complaints to the Secretary.
3.308 Compliance reviews.
3.310 Responsibilities of respondents.
3.312 Secretarial action regarding complaints and compliance reviews.
3.314 Investigational subpoenas and inquiries.
3.402 Basis for a civil money penalty.
3.404 Amount of a civil money penalty.
3.408 Factors considered in determining the amount of a civil money penalty.
3.414 Limitations.
3.416 Authority to settle.
3.418 Exclusivity of penalty.
3.420 Notice of proposed determination.
3.422 Failure to request a hearing.
3.424 Collection of penalty.
3.426 Notification of the public and other agencies.
3.504 Hearings before an ALJ.
3.506 Rights of the parties.
3.508 Authority of the ALJ.
3.510 Ex parte contacts.
3.512 Prehearing conferences.
3.514 Authority to settle.
3.516 Discovery.
3.518 Exchange of witness lists, witness statements, and exhibits.
3.520 Subpoenas for attendance at hearing.
3.522 Fees.
3.524 Form, filing, and service of papers.
3.526 Computation of time.
3.528 Motions.
3.530 Sanctions.
3.532 Collateral estoppel.
3.534 The hearing.
3.538 Witnesses.
3.540 Evidence.
3.542 The record.
3.544 Post hearing briefs.
3.546 ALJ's decision.
3.548 Appeal of the ALJ's decision.
3.550 Stay of the Secretary's decision.
3.552 Harmless error.

AUTHORITY: 42 U.S.C. 216, 299b–21 through 299b–26; 42 U.S.C. 299c–6.

SOURCE: 73 FR 70796, Nov. 21, 2008, unless otherwise noted.

Subpart A—General Provisions

§ 3.10 Purpose.

The purpose of this part is to implement the Patient Safety and Quality Improvement Act of 2005 (Pub. L. 109–41), which amended Title IX of the Public Health Service Act (42 U.S.C. 299 *et seq.*) by adding sections 921 through 926, 42 U.S.C. 299b–21 through 299b–26.

§ 3.20 Definitions.

As used in this part, the terms listed alphabetically below have the meanings set forth as follows:

Affiliated provider means, with respect to a provider, a legally separate provider that is the parent organization of the provider, is under common ownership, management, or control with the provider, or is owned, managed, or controlled by the provider.

AHRQ stands for the Agency for Healthcare Research and Quality in HHS.

ALJ stands for an Administrative Law Judge of HHS.

Board means the members of the HHS Departmental Appeals Board, in the Office of the Secretary, which issues decisions in panels of three.

Bona fide contract means:

(1) A written contract between a provider and a PSO that is executed in good faith by officials authorized to execute such contract; or

(2) A written agreement (such as a memorandum of understanding or equivalent recording of mutual commitments) between a Federal, State, local, or Tribal provider and a Federal, State, local, or Tribal PSO that is executed in good faith by officials authorized to execute such agreement.

Complainant means a person who files a complaint with the Secretary pursuant to § 3.306.

Component organization means an entity that:

(1) Is a unit or division of a legal entity (including a corporation, partnership, or a Federal, State, local or Tribal agency or organization); or

(2) Is owned, managed, or controlled by one or more legally separate parent organizations.

Component PSO means a PSO listed by the Secretary that is a component organization.

Confidentiality provisions means for purposes of subparts C and D, any requirement or prohibition concerning confidentiality established by sections 921 and 922(b)–(d), (g) and (i) of the Public Health Service Act, 42 U.S.C. 299b–21, 299b–22(b)–(d), (g) and (i) and the

provisions, at §§3.206 and 3.208, that implement the statutory prohibition on disclosure of identifiable patient safety work product.

Disclosure means the release, transfer, provision of access to, or divulging in any other manner of patient safety work product by:

(1) An entity or natural person holding the patient safety work product to another legally separate entity or natural person, other than a workforce member of, or a health care provider holding privileges with, the entity holding the patient safety work product; or

(2) A component PSO to another entity or natural person outside the component PSO and within the legal entity of which the component PSO is a part.

Entity means any organization or organizational unit, regardless of whether the organization is public, private, for-profit, or not-for-profit.

Group health plan means an employee welfare benefit plan (as defined in section 3(1) of the Employee Retirement Income Security Act of 1974 (ERISA)) to the extent that the plan provides medical care (as defined in paragraph (2) of section 2791(a) of the Public Health Service Act, including items and services paid for as medical care) to employees or their dependents (as defined under the terms of the plan) directly or through insurance, reimbursement, or otherwise.

*Health insurance issue*r means an insurance company, insurance service, or insurance organization (including a health maintenance organization, as defined in 42 U.S.C. 300gg–91(b)(3)) which is licensed to engage in the business of insurance in a State and which is subject to State law which regulates insurance (within the meaning of 29 U.S.C. 1144(b)(2)). This term does not include a group health plan.

Health maintenance organization means:

(1) A Federally qualified health maintenance organization (HMO) (as defined in 42 U.S.C. 300e(a));

(2) An organization recognized under State law as a health maintenance organization; or

(3) A similar organization regulated under State law for solvency in the same manner and to the same extent as such a health maintenance organization.

HHS stands for the United States Department of Health and Human Services.

HIPAA Privacy Rule means the regulations promulgated under section 264(c) of the Health Insurance Portability and Accountability Act of 1996 (HIPAA), at 45 CFR part 160 and subparts A and E of part 164.

Identifiable patient safety work product means patient safety work product that:

(1) Is presented in a form and manner that allows the identification of any provider that is a subject of the work product, or any providers that participate in, or are responsible for, activities that are a subject of the work product;

(2) Constitutes individually identifiable health information as that term is defined in the HIPAA Privacy Rule at 45 CFR 160.103; or

(3) Is presented in a form and manner that allows the identification of an individual who in good faith reported information directly to a PSO or to a provider with the intention of having the information reported to a PSO (''reporter'').

Nonidentifiable patient safety work product means patient safety work product that is not identifiable patient safety work product in accordance with the nonidentification standards set forth at §3.212.

OCR stands for the Office for Civil Rights in HHS.

Parent organization means an organization that: owns a controlling interest or a majority interest in a component organization; has the authority to control or manage agenda setting, project management, or day-to-day operations; or the authority to review and override decisions of a component organization. The component organization may be a provider.

Patient Safety Act means the Patient Safety and Quality Improvement Act of 2005 (Pub. L. 109–41), which amended Title IX of the Public Health Service Act (42 U.S.C. 299 *et seq.*) by inserting a new Part C, sections 921 through 926, which are codified at 42 U.S.C. 299b–21 through 299b–26.

Patient safety activities means the following activities carried out by or on behalf of a PSO or a provider:

(1) Efforts to improve patient safety and the quality of health care delivery;

(2) The collection and analysis of patient safety work product;

(3) The development and dissemination of information with respect to improving patient safety, such as recommendations, protocols, or information regarding best practices;

(4) The utilization of patient safety work product for the purposes of encouraging a culture of safety and of providing feedback and assistance to effectively minimize patient risk;

(5) The maintenance of procedures to preserve confidentiality with respect to patient safety work product;

(6) The provision of appropriate security measures with respect to patient safety work product;

(7) The utilization of qualified staff; and

(8) Activities related to the operation of a patient safety evaluation system and to the provision of feedback to participants in a patient safety evaluation system.

Patient safety evaluation system means the collection, management, or analysis of information for reporting to or by a PSO.

Patient safety organization (PSO) means a private or public entity or component thereof that is listed as a PSO by the Secretary in accordance with subpart B. A health insurance issuer or a component organization of a health insurance issuer may not be a PSO. See also the exclusions in § 3.102 of this part.

Patient safety work product:

(1) Except as provided in paragraph (2) of this definition, patient safety work product means any data, reports, records, memoranda, analyses (such as root cause analyses), or written or oral statements (or copies of any of this material)

(i) Which could improve patient safety, health care quality, or health care outcomes; and

(A) Which are assembled or developed by a provider for reporting to a PSO and are reported to a PSO, which includes information that is documented as within a patient safety evaluation system for reporting to a PSO, and such documentation includes the date the information entered the patient safety evaluation system; or

(B) Are developed by a PSO for the conduct of patient safety activities; or

(ii) Which identify or constitute the deliberations or analysis of, or identify the fact of reporting pursuant to, a patient safety evaluation system.

(2)(i) Patient safety work product does not include a patient's medical record, billing and discharge information, or any other original patient or provider information; nor does it include information that is collected, maintained, or developed separately, or exists separately, from a patient safety evaluation system. Such separate information or a copy thereof reported to a PSO shall not by reason of its reporting be considered patient safety work product.

(ii) Patient safety work product assembled or developed by a provider for reporting to a PSO may be removed from a patient safety evaluation system and no longer considered patient safety work product if:

(A) The information has not yet been reported to a PSO; and

(B) The provider documents the act and date of removal of such information from the patient safety evaluation system.

(iii) Nothing in this part shall be construed to limit information that is not patient safety work product from being:

(A) Discovered or admitted in a criminal, civil or administrative proceeding;

(B) Reported to a Federal, State, local or Tribal governmental agency for public health or health oversight purposes; or

(C) Maintained as part of a provider's recordkeeping obligation under Federal, State, local or Tribal law.

Person means a natural person, trust or estate, partnership, corporation, professional association or corporation, or other entity, public or private.

Provider means:

(1) An individual or entity licensed or otherwise authorized under State law to provide health care services, including—

(i) A hospital, nursing facility, comprehensive outpatient rehabilitation facility, home health agency, hospice program, renal dialysis facility, ambulatory surgical center, pharmacy, physician or health care practitioner's office (includes a group practice), long term care facility, behavior health residential treatment facility, clinical laboratory, or health center; or

(ii) A physician, physician assistant, registered nurse, nurse practitioner, clinical nurse specialist, certified registered nurse anesthetist, certified nurse midwife, psychologist, certified social worker, registered dietitian or nutrition professional, physical or occupational therapist, pharmacist, or other individual health care practitioner;

(2) Agencies, organizations, and individuals within Federal, State, local, or Tribal governments that deliver health care, organizations engaged as contractors by the Federal, State, local, or Tribal governments to deliver health care, and individual health care practitioners employed or engaged as contractors by the Federal State, local, or Tribal governments to deliver health care; or

(3) A parent organization of one or more entities described in paragraph (1)(i) of this definition or a Federal, State, local, or Tribal government unit that manages or controls one or more entities described in paragraphs (1)(i) or (2) of this definition.

Research has the same meaning as the term is defined in the HIPAA Privacy Rule at 45 CFR 164.501.

Respondent means a provider, PSO, or responsible person who is the subject of a complaint or a compliance review.

Responsible person means a person, other than a provider or a PSO, who has possession or custody of identifiable patient safety work product and is subject to the confidentiality provisions.

Workforce means employees, volunteers, trainees, contractors, or other persons whose conduct, in the performance of work for a provider, PSO or responsible person, is under the direct control of such provider, PSO or responsible person, whether or not they are paid by the provider, PSO or responsible person.

Subpart B—PSO Requirements and Agency Procedures

§3.102 Process and requirements for initial and continued listing of PSOs.

(a) *Eligibility and process for initial and continued listing*—(1) *Submission of certification*. Any entity, except as specified in paragraph (a)(2) of this section, may request from the Secretary an initial or continued listing as a PSO by submitting a completed certification form that meets the requirements of this section, in accordance with §3.112. An individual with authority to make commitments on behalf of the entity seeking listing will be required to submit contact information for the entity and:

(i) Attest that the entity is not subject to any exclusion in paragraph (a)(2) of this section;

(ii) Provide certifications that the entity meets each requirement for PSOs in paragraph (b) of this section;

(iii) If the entity is a component of another organization, provide the additional certifications that the entity meets the requirements of paragraph (c)(1)(i) of this section;

(iv) If the entity is a component of an excluded entity described in paragraph (a)(2)(ii), provide the additional certifications and information required by paragraph (c)(1)(ii) of this section;

(v) Attest that the entity has disclosed if the Secretary has ever delisted this entity (under its current name or any other) or refused to list the entity or whether any of its officials or senior managers held comparable positions of responsibility in an entity that was denied listing or delisted and, if any of these circumstances apply, submit with its certifications and related disclosures, the name of the entity or entities that the Secretary declined to list or delisted;

(vi) Attest that the PSO will promptly notify the Secretary during its period of listing if it can no longer comply with any of its attestations and the applicable requirements in §§3.102(b) and 3.102(c) or if there have been any changes in the accuracy of the information submitted for listing, along with the pertinent changes; and

(vii) Provide other information that the Secretary determines to be necessary to make the requested listing determination.

(2) *Exclusion of certain entities.* The following types of entities may not seek listing as a PSO:

(i) A health insurance issuer; a unit or division of a health insurance issuer; or an entity that is owned, managed, or controlled by a health insurance issuer;

(ii)(A) An entity that accredits or licenses health care providers;

(B) An entity that oversees or enforces statutory or regulatory requirements governing the delivery of health care services;

(C) An agent of an entity that oversees or enforces statutory or regulatory requirements governing the delivery of health care services; or

(D) An entity that operates a Federal, state, local or Tribal patient safety reporting system to which health care providers (other than members of the entity's workforce or health care providers holding privileges with the entity) are required to report information by law or regulation.

(iii) A component of an entity listed in paragraph (a)(2)(ii) may seek listing as a component PSO subject to the requirements and restrictions of paragraph (c)(1)(ii) of this section.

(3) *Submission of certification for continued listing.* To facilitate a timely Secretarial determination regarding acceptance of its certification for continued listing, a PSO must submit the required certification no later than 75 days before the expiration of a PSO's three-year period of listing.

(b) *Fifteen general PSO certification requirements.* The certifications submitted to the Secretary in accordance with paragraph (a)(1)(ii) of this section must conform to the following 15 requirements:

(1) *Required certification regarding eight patient safety activities*—(i) *Initial listing.* An entity seeking initial listing as a PSO must certify that it has written policies and procedures in place to perform each of the eight patient safety activities, defined in § 3.20. With respect to paragraphs (5) and (6) in the definition of patient safety activities regarding confidentiality and security, the policies and procedures must include and provide for:

(A) Compliance with the confidentiality provisions of subpart C of this part and with appropriate security measures as required by § 3.106 of this subpart.

(B) Notification of each provider that submitted patient safety work product or data as described in § 3.108(b)(2) to the entity if the submitted work product or data was subject to an unauthorized disclosure or its security was breached.

(ii) *Continued Listing.* A PSO seeking continued listing must certify that it is performing, and will continue to perform, each of the patient safety activities defined in § 3.20, and is and will continue to comply with the requirements of paragraphs (b)(1)(i)(A) and (B) of this section.

(2) *Required certification regarding seven PSO criteria*—(i) *Initial Listing.* In its initial certification submission, an entity must also certify that, if listed as a PSO, it will comply with the seven requirements in paragraphs (b)(2)(i)(A) through (G) of this section.

(A) The mission and primary activity of the PSO must be to conduct activities that are to improve patient safety and the quality of health care delivery.

(B) The PSO must have appropriately qualified workforce members, including licensed or certified medical professionals.

(C) The PSO, within the 24-month period that begins on the date of its initial listing as a PSO, and within each sequential 24-month period thereafter, must have 2 bona fide contracts, each of a reasonable period of time, each with a different provider for the purpose of receiving and reviewing patient safety work product.

(D) The PSO is not a health insurance issuer, and is not a component of a health insurance issuer.

(E) The PSO must make disclosures to the Secretary as required under § 3.102(d), in accordance with § 3.112 of this subpart.

(F) To the extent practical and appropriate, the PSO must collect patient safety work product from providers in a standardized manner that permits valid comparisons of similar cases among similar providers.

(G) The PSO must utilize patient safety work product for the purpose of providing direct feedback and assistance to providers to effectively minimize patient risk.

(ii) *Continued Listing.* A PSO seeking continued listing must certify that it is complying with, and will continue to comply with, the requirements of paragraphs (b)(2)(i)(A) through (G) of this section.

(iii) *Compliance with the criterion for collecting patient safety work product in a standardized manner to the extent practical and appropriate.* With respect to paragraph (b)(2)(i)(F) of this section, the Secretary will assess compliance by a PSO in the following manner.

(A) A PSO seeking continued listing must:

(*1*) Certify that the PSO is using the Secretary's published guidance for common formats and definitions in its collection of patient safety work product (option (I));

(*2*) Certify that the PSO is using an alternative system of formats and definitions that permits valid comparisons of similar cases among similar providers (option (II)); or

(*3*) Provide a clear explanation for why it is not practical or appropriate for the PSO to comply with options (I) or (II) at this time.

(B) The Secretary will consider a PSO to be in compliance if the entity complies with option (I), satisfactorily demonstrates that option (II) permits valid comparisons of similar cases among similar providers, or satisfactorily demonstrates that it is not practical or appropriate for the PSO to comply with options (I) or (II) at this time.

(c) *Additional certifications required of component organizations*—(1) *Requirements when seeking listing*—(i) *Requirements that all component organizations must meet.* In addition to meeting the 15 general PSO certification requirements of paragraph (b) of this section, an entity seeking initial listing that is a component of another organization must certify that it will comply with the requirements of paragraph (c)(2) of this section. A component PSO seeking continued listing must certify that it is complying with, and will continue to comply with, the requirements of this same paragraph (c)(2). At initial and continued listing, a component entity must attach to its certifications for listing contact information for its parent organization(s).

(ii) *Additional requirements and limitations applicable to components of entities that are excluded from listing.* In addition to the requirements under paragraph (c)(1)(i) of this section, a component of an organization excluded from listing under paragraph (a)(2)(ii) of this section must submit the additional certifications and specified information for initial and continued listing and comply with paragraph (c)(4) of this section.

(2) *Required component certifications*—(i) *Separation of patient safety work product.* A component PSO must maintain patient safety work product separately from the rest of the parent organization(s) of which it is a part, and establish appropriate security measures to maintain the confidentiality of patient safety work product. The information system in which the component PSO maintains patient safety work product must not permit unauthorized access by one or more individuals in, or by units of, the rest of the parent organization(s) of which it is a part.

(ii) *Nondisclosure of patient safety work product.* A component PSO must require that members of its workforce and any other contractor staff not make unauthorized disclosures of patient safety work product to the rest of the parent organization(s) of which it is a part.

(iii) *No conflict of interest.* The pursuit of the mission of a component PSO must not create a conflict of interest with the rest of the parent organization(s) of which it is a part.

(3) *Written agreements for assisting a component PSO in the conduct of patient safety activities.* Notwithstanding the requirements of paragraph (c)(2) of this section, a component PSO may provide access to identifiable patient safety work product to one or more individuals in, or to one or more units of, the rest of the parent organization(s) of which it is a part, if the component PSO enters into a written agreement with such individuals or units which requires that:

(i) The component PSO will only provide access to identifiable patient safety work product to enable such individuals or units to assist the component PSO in its conduct of patient safety activities, and

(ii) Such individuals or units that receive access to identifiable patient safety work product pursuant to such written agreement will only use or disclose such information as specified by the component PSO to assist the component PSO in its conduct of patient safety activities, will take appropriate security measures to prevent unauthorized disclosures and will comply with the other certifications the component has made pursuant to paragraph (c)(2) of this section regarding unauthorized disclosures and conducting the mission of the PSO without creating conflicts of interest.

(4) *Required attestations, information and operational limitations for components of entities excluded from listing.* A component organization of an entity that is subject to the restrictions of paragraph (a)(2)(ii) of this section must:

(i) Submit the following information with its certifications for listing:

(A) A statement describing its parent organization's role, and the scope of the parent organization's authority, with respect to any of the following that apply: Accreditation or licensure of health care providers, oversight or enforcement of statutory or regulatory requirements governing the delivery of health care services, serving as an agent of such a regulatory oversight or enforcement authority, or administering a public mandatory patient safety reporting system;

(B) An attestation that the parent organization has no policies or procedures that would require or induce providers to report patient safety work product to their component organization once listed as a PSO and that the component PSO will notify the Secretary within 5 calendar days of the date on which the component organization has knowledge of the adoption by the parent organization of such policies or procedures, and an acknowledgment that the adoption of such policies or procedures by the parent organization during the component PSO's period of listing will result in the Secretary initiating an expedited revocation process in accordance with § 3.108(e); and

(C) An attestation that the component organization will prominently post notification on its Web site and publish in any promotional materials for dissemination to providers, a summary of the information that is required by paragraph (c)(4)(i)(A) of this section.

(ii) Comply with the following requirements during its period of listing:

(A) The component organization may not share staff with its parent organization(s).

(B) The component organization may enter into a written agreement pursuant to paragraph (c)(3) but such agreements are limited to units or individuals of the parent organization(s) whose responsibilities do not involve the activities specified in the restrictions in paragraph (a)(2)(ii) of this section.

(d) *Required notifications.* Upon listing, PSOs must meet the following notification requirements:

(1) *Notification regarding PSO compliance with the minimum contract requirement.* No later than 45 calendar days prior to the last day of the pertinent 24-month assessment period, specified in paragraph (b)(2)(iii)(C) of this section, the Secretary must receive from a PSO a certification that states whether it has met the requirement of that paragraph regarding two bona fide contracts, submitted in accordance with § 3.112 of this subpart.

(2) *Notification regarding a PSO's relationships with its contracting providers*—(i) *Requirement.* A PSO must file a disclosure statement regarding a provider with which it has a contract that provides the confidentiality and privilege protections of the Patient Safety Act (hereinafter referred to as a Patient Safety Act contract) if the PSO has any other relationships with this provider that are described in paragraphs (d)(2)(i)(A) through (D) of this section. The PSO must disclose all such relationships. A disclosure statement is not required if all of its other relationships with the provider are limited to Patient Safety Act contracts.

(A) The provider and PSO have current contractual relationships, other

than those arising from any Patient Safety Act contracts, including formal contracts or agreements that impose obligations on the PSO.

(B) The provider and PSO have current financial relationships other than those arising from any Patient Safety Act contracts. A financial relationship may include any direct or indirect ownership or investment relationship between the PSO and the contracting provider, shared or common financial interests or direct or indirect compensation arrangements whether in cash or in-kind.

(C) The PSO and provider have current reporting relationships other than those arising from any Patient Safety Act contracts, by which the provider has access to information regarding the work and operation of the PSO that is not available to other contracting providers.

(D) Taking into account all relationships that the PSO has with the provider, the PSO is not independently managed or controlled, or the PSO does not operate independently from, the contracting provider.

(ii) *Content*. A PSO must submit to the Secretary the required attestation form for disclosures with the information specified below in accordance with §3.112 and this section. The substantive information that must be included with each submission has two required parts:

(A) *The Required Disclosures*. The first part of the substantive information must provide a succinct list of obligations between the PSO and the contracting provider apart from their Patient Safety Act contract(s) that create, or contain, any of the types of relationships that must be disclosed based upon the requirements of paragraphs (d)(2)(i)(A) through (D) of this section. Each reportable obligation or discrete set of obligations that the PSO has with this contracting provider should be listed only once; noting the specific aspects of the obligation(s) that reflect contractual or financial relationships, involve access to information that is not available to other providers, or affect the independence of PSO operations, management, or control.

(B) *An Explanatory Narrative*. The second required part of the substantive information must provide a brief explanatory narrative succinctly describing: The policies and procedures that the PSO has in place to ensure adherence to objectivity and professionally recognized analytic standards in the assessments it undertakes; and any other policies or procedures, or agreements with this provider, that the PSO has in place to ensure that it can fairly and accurately perform patient safety activities.

(iii) *Deadlines for submission*. The Secretary must receive a disclosure statement within 45 days of the date on which a PSO enters a contract with a provider if the circumstances described in any of the paragraphs (d)(2)(i)(A) through (D) of this section are met on the date the contract is entered. During the contract period, if these circumstances subsequently arise, the Secretary must receive a disclosure statement from the PSO within 45 days of the date that any disclosure requirement in paragraph (d)(2)(i) of this section first applies.

§3.104 Secretarial actions.

(a) *Actions in response to certification submissions for initial and continued listing as a PSO*. (1) In response to an initial or continued certification submission by an entity, pursuant to the requirements of §3.102 of this subpart, the Secretary may—

(i) Accept the certification submission and list the entity as a PSO, or maintain the listing of a PSO, if the Secretary determines that the entity meets the applicable requirements of the Patient Safety Act and this subpart;

(ii) Deny acceptance of a certification submission and, in the case of a currently listed PSO, remove the entity from the list if the entity does not meet the applicable requirements of the Patient Safety Act and this subpart; or

(iii) Condition the listing of an entity or the continued listing of a PSO, following a determination made pursuant to paragraph (c) of this section or a determination after review of the pertinent history of an entity that has been

delisted or refused listing and its officials and senior managers.

(2) *Basis for determination.* In making a determination regarding listing, the Secretary will consider the certification submission; any prior actions by the Secretary regarding the entity or PSO including delisting; any history of or current non-compliance by the entity or the PSO or its officials or senior managers with statutory or regulatory requirements or requests from the Secretary; the relationships of the entity or PSO with providers; and any findings made by the Secretary in accordance with paragraph (c) of this section.

(3) *Notification.* The Secretary will notify in writing each entity of action taken on its certification submission for initial or continued listing. The Secretary will provide reasons when an entity's certification is conditionally accepted and the entity is conditionally listed, when an entity's certification is not accepted and the entity is not listed, or when acceptance of its certification is revoked and the entity is delisted.

(b) *Actions regarding PSO compliance with the minimum contract requirement.* After the date on which the Secretary, under § 3.102(d)(1) of this subpart, must receive notification regarding compliance of a PSO with the minimum contract requirement—

(1) If the PSO has met the minimum contract requirement, the Secretary will acknowledge in writing receipt of the notification and add information to the list established pursuant to paragraph (d) of this section stating that the PSO has certified that it has met the requirement.

(2) If the PSO states that it has not yet met the minimum contract requirement by the date specified in § 3.102(d)(1), or if notice is not received by that date, the Secretary will issue to the PSO a notice of a preliminary finding of deficiency as specified in § 3.108(a)(2) and establish a period for correction that extends until midnight of the last day of the PSO's applicable 24-month period of assessment. Thereafter, if the requirement has not been met, the Secretary will provide the PSO a written notice of proposed revocation and delisting in accordance with § 3.108(a)(3).

(c) *Actions regarding required disclosures by PSOs of relationships with contracting providers.* The Secretary will review and make findings regarding each disclosure statement submitted by a PSO, pursuant to § 3.102(d)(2), regarding its relationships with contracting provider(s), determine whether such findings warrant action regarding the listing of the PSO in accordance with paragraph (c)(2) of this section, and make the findings public.

(1) *Basis of findings regarding PSO disclosure statements.* In reviewing disclosure statements, submitted pursuant to § 3.102(d)(2) of this subpart, the Secretary will consider the disclosed relationship(s) between the PSO and the contracting provider and the statements and material submitted by the PSO describing the policies and procedures that the PSO has in place to determine whether the PSO can fairly and accurately perform the required patient safety activities.

(2) *Determination by the Secretary.* Based on the Secretary's review and findings, he may choose to take any of the following actions:

(i) For an entity seeking an initial or continued listing, the Secretary may list or continue the listing of an entity without conditions, list the entity subject to conditions, or deny the entity's certification for initial or continued listing; or

(ii) For a listed PSO, the Secretary may determine that the entity will remain listed without conditions, continue the entity's listing subject to conditions, or remove the entity from the list of PSOs.

(3) *Release of disclosure statements and Secretarial findings.* (i) Subject to paragraph (c)(3)(ii) of this section, the Secretary will make disclosure statements available to the public along with related findings that are made available in accordance with paragraph (c) of this section.

(ii) The Secretary may withhold information that is exempt from public disclosure under the Freedom of Information Act, e.g., trade secrets or confidential commercial information that are subject to the restrictions of 18 U.S.C. 1905.

(d) *Maintaining a list of PSOs.* The Secretary will compile and maintain a

publicly available list of entities whose certifications as PSOs have been accepted. The list will include contact information for each entity, a copy of all certification forms and disclosure statements submitted by each entity in accordance with paragraph (c)(3)(ii) of this section, the effective date of the PSO's listing, and information on whether a PSO has certified that it has met the two contract requirement. The list also will include a copy of the Secretary's findings regarding each disclosure statement submitted by an entity, information describing any related conditions that have been placed by the Secretary on the listing of an entity as a PSO, and other information that this Subpart states may be made public. AHRQ may maintain a PSO website (or a comparable future form of public notice) and may post the list on this website.

(e) *Three-year period of listing.* (1) The three-year period of listing of a PSO will automatically expire at midnight of the last day of this period, unless the listing had been revoked or relinquished earlier in accordance with §3.108 of this subpart, or if, prior to this automatic expiration, the PSO seeks a new three-year listing, in accordance with §3.102, and the Secretary accepts the PSO's certification for a new three-year listing, in accordance with §3.104(a).

(2) The Secretary plans to send a written notice of imminent expiration to a PSO at least 60 calendar days prior to the date on which its three-year period of listing expires if the Secretary has not yet received a certification for continued listing. The Secretary plans to indicate, on the AHRQ PSO website, the PSOs from whom certifications for continued listing have not been timely received.

(f) *Effective dates of Secretarial actions.* Unless otherwise stated, the effective date of each action by the Secretary pursuant to this subpart will be specified in the written notice of such action that is sent to the entity. When the Secretary sends a notice that addresses acceptance or revocation of an entity's certifications or voluntary relinquishment by an entity of its status as a PSO, the notice will specify the effective date and time of listing or delisting.

§3.106 Security requirements.

(a) *Application.* A PSO must secure patient safety work product in conformance with the security requirements of paragraph (b) of this section. These requirements must be met at all times and at any location at which the PSO, its workforce members, or its contractors receive, access, or handle patient safety work product. Handling patient safety work product includes its processing, development, use, maintenance, storage, removal, disclosure, transmission and destruction.

(b) *Security framework.* A PSO must have written policies and procedures that address each of the considerations specified in this subsection. In addressing the framework that follows, the PSO may develop appropriate and scalable security standards, policies, and procedures that are suitable for the size and complexity of its organization.

(1) *Security management.* A PSO must address:

(i) Maintenance and effective implementation of written policies and procedures that conform to the requirements of this section to protect the confidentiality, integrity, and availability of the patient safety work product that is received, accessed, or handled; and to monitor and improve the effectiveness of such policies and procedures, and

(ii) Training of the PSO workforce and PSO contractors who receive, access, or handle patient safety work product regarding the requirements of the Patient Safety Act, this Part, and the PSO's policies and procedures regarding the confidentiality and security of patient safety work product.

(2) *Distinguishing patient safety work product.* A PSO must address:

(i) Maintenance of the security of patient safety work product, whether in electronic or other media, through either physical separation from non-patient safety work product, or if co-located with non-patient safety work product, by making patient safety work product distinguishable so that the appropriate form and level of security can be applied and maintained;

(ii) Protection of the media, whether in electronic, paper, or other media or format, that contain patient safety work product, limiting access to authorized users, and sanitizing and destroying such media before their disposal or release for reuse; and

(iii) Physical and environmental protection, to control and limit physical and virtual access to places and equipment where patient safety work product is received, accessed, or handled.

(3) *Security control and monitoring.* A PSO must address:

(i) Identification of those authorized to receive, access, or handle patient safety work product and an audit capacity to detect unlawful, unauthorized, or inappropriate receipt, access, or handling of patient safety work product, and

(ii) Methods to prevent unauthorized receipt, access, or handling of patient safety work product.

(4) *Security assessment.* A PSO must address:

(i) Periodic assessments of security risks and controls to establish if its controls are effective, to correct any deficiency identified, and to reduce or eliminate any vulnerabilities.

(ii) System and communications protection, to monitor, control, and protect PSO receipt, access, or handling of patient safety work product with particular attention to the transmission of patient safety work product to and from providers, other PSOs, contractors or any other responsible persons.

§ 3.108 Correction of deficiencies, revocation, and voluntary relinquishment.

(a) *Process for correction of a deficiency and revocation*—(1) *Circumstances leading to revocation.* The Secretary may revoke his acceptance of an entity's certification (''revocation'') and delist the entity as a PSO if he determines—

(i) The PSO is not fulfilling the certifications made to the Secretary as required by § 3.102;

(ii) The PSO has not met the two contract requirement, as required by § 3.102(d)(1);

(iii) Based on a PSO's disclosures made pursuant to § 3.102(d)(2) , that the entity cannot fairly and accurately perform the patient safety activities of a PSO with a public finding to that effect; or

(iv) The PSO is not in compliance with any other provision of the Patient Safety Act or this part.

(2) *Notice of preliminary finding of deficiency and establishment of an opportunity for correction of a deficiency.* (i) Except as provided by paragraph (e) of this section, if the Secretary determines that a PSO is not in compliance with its obligations under the Patient Safety Act or this subpart, the Secretary must send a PSO written notice of the preliminary finding of deficiency. The notice must state the actions or inactions that encompass the deficiency finding, outline the evidence that the deficiency exists, specify the possible and/or required corrective actions that must be taken, and establish a date by which the deficiency must be corrected. The Secretary may specify in the notice the form of documentation required to demonstrate that the deficiency has been corrected.

(ii) The notice of a preliminary finding of deficiency is presumed received five days after it is sent, absent evidence of the actual receipt date. If a PSO does not submit evidence to the Secretary within 14 calendar days of actual or constructive receipt of such notice, whichever is longer, which demonstrates that the preliminary finding is factually incorrect, the preliminary finding will be the basis for a finding of deficiency.

(3) *Determination of correction of a deficiency.* (i) Unless the Secretary specifies another date, the Secretary must receive documentation to demonstrate that the PSO has corrected any deficiency cited in the preliminary finding of deficiency no later than five calendar days following the last day of the correction period that is specified by the Secretary in such notice.

(ii) In making a determination regarding the correction of any deficiency, the Secretary will consider the documentation submitted by the PSO, any assessments under § 3.110, recommendations of program staff, and any other information available regarding the PSO that the Secretary deems appropriate and relevant to the PSO's implementation of the terms of its certification.

(iii) After completing his review, the Secretary may make one of the following determinations:

(A) The action(s) taken by the PSO have corrected any deficiency, in which case the Secretary will withdraw the notice of deficiency and so notify the PSO;

(B) The PSO has acted in good faith to correct the deficiency, but the Secretary finds an additional period of time is necessary to achieve full compliance and/or the required corrective action specified in the notice of a preliminary finding of deficiency needs to be modified in light of the experience of the PSO in attempting to implement the corrective action, in which case the Secretary will extend the period for correction and/or modify the specific corrective action required; or

(C) The PSO has not completed the corrective action because it has not acted with reasonable diligence or speed to ensure that the corrective action was completed within the allotted time, in which case the Secretary will issue to the PSO a notice of proposed revocation and delisting.

(iv) When the Secretary issues a written notice of proposed revocation and delisting, the notice will specify the deficiencies that have not been timely corrected and will detail the manner in which the PSO may exercise its opportunity to be heard in writing to respond to the deficiencies specified in the notice.

(4) *Opportunity to be heard in writing following a notice of proposed revocation and delisting.* The Secretary will afford a PSO an opportunity to be heard in writing, as specified in paragraph (a)(4)(i) of this section, to provide a substantive response to the deficiency finding(s) set forth in the notice of proposed revocation and delisting.

(i) The notice of proposed revocation and delisting is presumed received five days after it is sent, absent evidence of actual receipt. The Secretary will provide a PSO with a period of time, beginning with the date of receipt of the notice of proposed revocation and delisting of which there is evidence, or the presumed date of receipt if there is no evidence of earlier receipt, and ending at midnight 30 calendar days thereafter, during which the PSO may submit a substantive response to the deficiency findings in writing.

(ii) The Secretary will provide to the PSO any rules of procedure governing the form or transmission of the written response to the notice of proposed revocation and delisting. Such rules may also be posted on the AHRQ PSO Web site or published in the FEDERAL REGISTER.

(iii) If a PSO does not submit a written response to the deficiency finding(s) within 30 calendar days of receipt of the notice of proposed revocation and delisting, the notice of proposed revocation becomes final as a matter of law and the basis for Secretarial action under paragraph (b)(1) of this section.

(5) *The Secretary's decision regarding revocation.* The Secretary will review the entire administrative record pertaining to a notice of proposed revocation and delisting and any written materials submitted by the PSO under paragraph (a)(4) of this section. The Secretary may affirm, reverse, or modify the notice of proposed revocation and delisting and will make a determination with respect to the continued listing of the PSO.

(b) *Revocation of the Secretary's acceptance of a PSO's certifications*—(1) *Establishing the date and time of revocation and delisting.* When the Secretary concludes, in accordance with a decision made under paragraphs (a)(5), (e)(3)(iii) or (e)(3)(iv)(C) of this section, that revocation of the acceptance of a PSO's certification is warranted for its failure to comply with requirements of the Patient Safety Act or of this Part, the Secretary will establish the effective time and date for such prompt revocation and removal of the entity from the list of PSOs, so notify the PSO in writing, and provide the relevant public notice required by §3.108(d) of this subpart.

(2) *Required notification of providers and status of data.* (i) Upon being notified of the Secretary's action pursuant to paragraph (b)(1) of this section, the former PSO will take all reasonable actions to notify each provider, whose patient safety work product it collected

or analyzed, of the Secretary's action(s) and the following statutory information: Confidentiality and privilege protections that applied to patient safety work product while the former PSO was listed continue to apply after the entity is removed from listing. Data submitted by providers to the former PSO for 30 calendar days following the date and time on which the entity was removed from the list of PSOs pursuant to paragraph (b)(1) of this section will have the same status as data submitted while the entity was still listed.

(ii) Within 15 days of being notified of the Secretary's action pursuant to paragraph (b)(1) of this section, the former PSO shall submit to the Secretary confirmation that it has taken the actions in paragraph (b)(2)(i) of this section.

(3) *Disposition of patient safety work product and data.* Within 90 days following the effective date of revocation and delisting pursuant to paragraph (b)(1) of this section, the former PSO will take one or more of the following measures in regard to patient safety work product and data described in paragraph (b)(2)(i) of this section:

(i) Transfer such patient safety work product or data, with the approval of the source from which it was received, to a PSO that has agreed to receive such patient safety work product or data;

(ii) Return such work product or data to the source from which it was submitted; or

(iii) If returning such patient safety work product or data to its source is not practicable, destroy such patient safety work product or data.

(c) *Voluntary relinquishment*—(1) *Circumstances constituting voluntary relinquishment.* A PSO will be considered to have voluntarily relinquished its status as a PSO if the Secretary accepts a notification from a PSO that it wishes to relinquish voluntarily its listing as a PSO.

(2) *Notification of voluntary relinquishment.* A PSO's notification of voluntary relinquishment to the Secretary must include the following:

(i) An attestation that all reasonable efforts have been made, or will have been made by a PSO within 15 calendar days of this statement, to notify the sources from which it received patient safety work product of the PSO's intention to cease PSO operations and activities, to relinquish voluntarily its status as a PSO, to request that these other entities cease reporting or submitting any further information to the PSO as soon as possible, and inform them that any information reported after the effective date and time of delisting that the Secretary sets pursuant to paragraph (c)(3) of this section will not be protected as patient safety work product under the Patient Safety Act.

(ii) An attestation that the entity has established a plan, or within 15 calendar days of this statement, will have made all reasonable efforts to establish a plan, in consultation with the sources from which it received patient safety work product, that provides for the disposition of the patient safety work product held by the PSO consistent with, to the extent practicable, the statutory options for disposition of patient safety work product as set out in paragraph (b)(3) of this section; and

(iii) Appropriate contact information for further communications from the Secretary.

(3) *Response to notification of voluntary relinquishment.* (i) After a PSO provides the notification required by paragraph (c)(2) of this section, the Secretary will respond in writing to the entity indicating whether the proposed voluntary relinquishment of its PSO status is accepted. If the voluntary relinquishment is accepted, the Secretary's response will indicate an effective date and time for the entity's removal from the list of PSOs and will provide public notice of the voluntary relinquishment and the effective date and time of the delisting, in accordance with §3.108(d) of this subpart.

(ii) If the Secretary receives a notification of voluntary relinquishment during or immediately after revocation proceedings for cause under paragraphs (a)(4) and (a)(5) of this section, the Secretary, as a matter of discretion, may accept voluntary relinquishment in accordance with the preceding paragraph or decide not to accept the entity's proposed voluntary relinquishment and proceed with the revocation for cause

and delisting pursuant to paragraph (b)(1) of this section.

(4) *Non-applicability of certain procedures and requirements.* (i) A decision by the Secretary to accept a request by a PSO to relinquish voluntarily its status as a PSO pursuant to paragraph (c)(2) of this section does not constitute a determination of a deficiency in PSO compliance with the Patient Safety Act or with this Subpart.

(ii) The procedures and requirements of §3.108(a) of this subpart regarding deficiencies including the opportunity to correct deficiencies and to be heard in writing, and the procedures and requirements of §3.108(b) are not applicable to determinations of the Secretary made pursuant to this subsection.

(d) *Public notice of delisting regarding removal from listing.* If the Secretary removes an entity from the list of PSOs following revocation of acceptance of the entity's certification pursuant to §3.108(b)(1), voluntary relinquishment pursuant to §3.108(c)(3), or expiration of an entity's period of listing pursuant to §3.104(e)(1), the Secretary will promptly publish in the FEDERAL REGISTER and on the AHRQ PSO website, or in a comparable future form of public notice, a notice of the actions taken and the effective dates.

(e) *Expedited revocation and delisting*—(1) *Basis for expedited revocation.* Notwithstanding any other provision of this section, the Secretary may use the expedited revocation process described in paragraph (e)(3) of this section if he determines—

(i) The PSO is not in compliance with this part because it is or is about to become an entity described in §3.102(a)(2).

(ii) The parent organization of the PSO is an entity described in §3.102(a)(2) and requires or induces health care providers to report patient safety work product to its component PSO; or

(iii) The circumstances for revocation in paragraph (a)(1) of this section exist, and the Secretary has determined that there would be serious adverse consequences if the PSO were to remain listed.

(2) Applicable provisions. If the Secretary uses the expedited revocation process described in paragraph (e)(3) of this section, the procedures in paragraphs (a)(2) through (5) of this section shall not apply and paragraph (a)(1) and paragraphs (b) and (d) of this section shall apply.

(3) *Expedited revocation process.* (i) The Secretary must send the PSO a written notice of deficiency that:

(A) Identifies the evidence that the circumstances for revocation and delisting under paragraph (a)(1) of this section exist, and any corrective action that the PSO must take if the Secretary determines that corrective action may resolve the matter so that the entity would not be delisted; and

(B) Provides an opportunity for the PSO to respond in writing to correct the facts or the legal bases for delisting found in the notice, and to offer any other grounds for its not being delisted.

(ii) The notice of deficiency will be presumed to be received five days after it is sent, absent evidence of the actual receipt date.

(iii) If the PSO does not submit a written response to the Secretary within 14 calendar days of actual or constructive receipt of such notice, whichever is longer, the Secretary may revoke his acceptance of the PSO's certifications and remove the entity from the list of PSOs.

(iv) If the PSO responds in writing within the required 14-day time period, the Secretary may take any of the following actions:

(A) Withdraw the notice of deficiency;

(B) Provide the PSO with more time to resolve the matter to the Secretary's satisfaction; or

(C) Revoke his acceptance of the PSO's certifications and remove the entity from the list of PSOs.

§3.110 Assessment of PSO compliance.

The Secretary may request information or conduct announced or unannounced reviews of, or site visits to, PSOs, to assess or verify PSO compliance with the requirements of this subpart and for these purposes will be allowed to inspect the physical or virtual sites maintained or controlled by the PSO. The Secretary will be allowed to inspect and/or be given or sent copies of any PSO records deemed necessary

and requested by the Secretary to implement the provisions of this subpart. Such PSO records may include patient safety work product in accordance with § 3.206(d) of this part.

§ 3.112 Submissions and forms.

(a) Forms referred to in this subpart may be obtained on the PSO Web site (*http://www.pso.ahrq.gov*) maintained for the Secretary by AHRQ or a successor agency or on successor publication technology or by requesting them in writing by e-mail at *pso@ahrq.hhs.gov*, or by mail from the Agency for Healthcare Research and Quality, CQuIPS, PSO Liaison, 540 Gaither Road, Rockville, MD 20850. A form (including any required attachments) must be submitted in accordance with the accompanying instructions.

(b) Information submitted to AHRQ in writing, but not required to be on or attached to a form, and requests for information from AHRQ, may be submitted by mail or other delivery to the Agency for Healthcare Research and Quality, CQuIPS, PSO Liaison, 540 Gaither Road, Rockville, MD 20850, by facsimile at (301) 427–1341, or by e-mail at *pso@ahrq.hhs.gov*.

(c) If a submission to the Secretary is incomplete or additional information is needed to allow a determination to be made under this subpart, the submitter will be notified if any additional information is required.

Subpart C—Confidentiality and Privilege Protections of Patient Safety Work Product

§ 3.204 Privilege of patient safety work product.

(a) *Privilege*. Notwithstanding any other provision of Federal, State, local, or Tribal law and subject to paragraph (b) of this section and § 3.208 of this subpart, patient safety work product shall be privileged and shall not be:

(1) Subject to a Federal, State, local, or Tribal civil, criminal, or administrative subpoena or order, including in a Federal, State, local, or Tribal civil or administrative disciplinary proceeding against a provider;

(2) Subject to discovery in connection with a Federal, State, local, or Tribal civil, criminal, or administrative proceeding, including in a Federal, State, local, or Tribal civil or administrative disciplinary proceeding against a provider;

(3) Subject to disclosure pursuant to section 552 of Title 5, United States Code (commonly known as the Freedom of Information Act) or any other similar Federal, State, local, or Tribal law;

(4) Admitted as evidence in any Federal, State, local, or Tribal governmental civil proceeding, criminal proceeding, administrative rulemaking proceeding, or administrative adjudicatory proceeding, including any such proceeding against a provider; or

(5) Admitted in a professional disciplinary proceeding of a professional disciplinary body established or specifically authorized under State law.

(b) *Exceptions to privilege*. Privilege shall not apply to (and shall not be construed to prohibit) one or more of the following disclosures:

(1) Disclosure of relevant patient safety work product for use in a criminal proceeding, subject to the conditions at § 3.206(b)(1) of this subpart.

(2) Disclosure to the extent required to permit equitable relief subject to the conditions at § 3.206(b)(2) of this subpart.

(3) Disclosure pursuant to provider authorizations subject to the conditions at § 3.206(b)(3) of this subpart.

(4) Disclosure of non-identifiable patient safety work product subject to the conditions at § 3.206(b)(5) of this subpart.

(c) *Implementation and enforcement by the Secretary*. Privilege shall not apply to (and shall not be construed to prohibit) disclosures of relevant patient safety work product to or by the Secretary if such patient safety work product is needed to investigate or determine compliance, or to seek or impose civil money penalties, with respect to this part or the HIPAA Privacy Rule, or to make or support decisions with respect to listing of a PSO.

§ 3.206 Confidentiality of patient safety work product.

(a) *Confidentiality*. Subject to paragraphs (b) through (e) of this section,

and §§ 3.208 and 3.210 of this subpart, patient safety work product shall be confidential and shall not be disclosed.

(b) *Exceptions to confidentiality*. The confidentiality provisions shall not apply to (and shall not be construed to prohibit) one or more of the following disclosures:

(1) *Disclosure in criminal proceedings*. Disclosure of relevant patient safety work product for use in a criminal proceeding, but only after a court makes an in-camera determination that:

(i) Such patient safety work product contains evidence of a criminal act;

(ii) Such patient safety work product is material to the proceeding; and

(iii) Such patient safety work product is not reasonably available from any other source.

(2) *Disclosure to permit equitable relief for reporters*. Disclosure of patient safety work product to the extent required to permit equitable relief under section 922 (f)(4)(A) of the Public Health Service Act, provided the court or administrative tribunal has issued a protective order to protect the confidentiality of the patient safety work product in the course of the proceeding.

(3) *Disclosure authorized by identified providers*. (i) Disclosure of identifiable patient safety work product consistent with a valid authorization if such authorization is obtained from each provider identified in such work product prior to disclosure. A valid authorization must:

(A) Be in writing and signed by the provider from whom authorization is sought; and

(B) Contain sufficient detail to fairly inform the provider of the nature and scope of the disclosures being authorized;

(ii) A valid authorization must be retained by the disclosing entity for six years from the date of the last disclosure made in reliance on the authorization and made available to the Secretary upon request.

(4) *Disclosure for patient safety activities*—(i) *Disclosure between a provider and a PSO*. Disclosure of patient safety work product for patient safety activities by a provider to a PSO or by a PSO to that disclosing provider.

(ii) *Disclosure to a contractor of a provider or a PSO*. A provider or a PSO may disclose patient safety work product for patient safety activities to an entity with which it has contracted to undertake patient safety activities on its behalf. A contractor receiving patient safety work product for patient safety activities may not further disclose patient safety work product, except to the provider or PSO with which it is contracted.

(iii) *Disclosure among affiliated providers*. Disclosure of patient safety work product for patient safety activities by a provider to an affiliated provider.

(iv) *Disclosure to another PSO or provider*. Disclosure of patient safety work product for patient safety activities by a PSO to another PSO or to another provider that has reported to the PSO, or, except as otherwise permitted in paragraph (b)(4)(iii) of this section, by a provider to another provider, provided:

(A) The following direct identifiers of any providers and of affiliated organizations, corporate parents, subsidiaries, practice partners, employers, members of the workforce, or household members of such providers are removed:

(*1*) Names;

(*2*) Postal address information, other than town or city, State and zip code;

(*3*) Telephone numbers;

(*4*) Fax numbers;

(*5*) Electronic mail addresses;

(*6*) Social security numbers or taxpayer identification numbers;

(*7*) Provider or practitioner credentialing or DEA numbers;

(*8*) National provider identification number;

(*9*) Certificate/license numbers;

(*10*) Web Universal Resource Locators (URLs);

(*11*) Internet Protocol (IP) address numbers;

(*12*) Biometric identifiers, including finger and voice prints; and

(*13*) Full face photographic images and any comparable images; and

(B) With respect to any individually identifiable health information in such patient safety work product, the direct identifiers listed at 45 CFR 164.514(e)(2) have been removed.

(5) *Disclosure of nonidentifiable patient safety work product.* Disclosure of nonidentifiable patient safety work product when patient safety work product meets the standard for nonidentification in accordance with § 3.212 of this subpart.

(6) *Disclosure for research.* (i) Disclosure of patient safety work product to persons carrying out research, evaluation or demonstration projects authorized, funded, certified, or otherwise sanctioned by rule or other means by the Secretary, for the purpose of conducting research.

(ii) If the patient safety work product disclosed pursuant to paragraph (b)(6)(i) of this section is by a HIPAA covered entity as defined at 45 CFR 160.103 and contains protected health information as defined by the HIPAA Privacy Rule at 45 CFR 160.103, such patient safety work product may only be disclosed under this exception in the same manner as would be permitted under the HIPAA Privacy Rule.

(7) *Disclosure to the Food and Drug Administration (FDA) and entities required to report to FDA.* (i) Disclosure by a provider of patient safety work product concerning an FDA-regulated product or activity to the FDA, an entity required to report to the FDA concerning the quality, safety, or effectiveness of an FDA-regulated product or activity, or a contractor acting on behalf of FDA or such entity for these purposes.

(ii) Any person permitted to receive patient safety work product pursuant to paragraph (b)(7)(i) of this section may only further disclose such patient safety work product for the purpose of evaluating the quality, safety, or effectiveness of that product or activity to another such person or the disclosing provider.

(8) *Voluntary disclosure to an accrediting body.* (i) Voluntary disclosure by a provider of patient safety work product to an accrediting body that accredits that provider, provided, with respect to any identified provider other than the provider making the disclosure:

(A) The provider agrees to the disclosure; or

(B) The identifiers at § 3.206(b)(4)(iv)(A) are removed.

(ii) An accrediting body may not further disclose patient safety work product it receives pursuant to paragraph (b)(8)(i) of this section.

(iii) An accrediting body may not take an accrediting action against a provider based on a good faith participation of the provider in the collection, development, reporting, or maintenance of patient safety work product in accordance with this Part. An accrediting body may not require a provider to reveal its communications with any PSO.

(9) *Disclosure for business operations.* (i) Disclosure of patient safety work product by a provider or a PSO for business operations to attorneys, accountants, and other professionals. Such contractors may not further disclose patient safety work product, except to the entity from which they received the information.

(ii) Disclosure of patient safety work product for such other business operations that the Secretary may prescribe by regulation as consistent with the goals of this part.

(10) *Disclosure to law enforcement.* (i) Disclosure of patient safety work product to an appropriate law enforcement authority relating to an event that either constitutes the commission of a crime, or for which the disclosing person reasonably believes constitutes the commission of a crime, provided that the disclosing person believes, reasonably under the circumstances, that the patient safety work product that is disclosed is necessary for criminal law enforcement purposes.

(ii) Law enforcement personnel receiving patient safety work product pursuant to paragraph (b)(10)(i) of this section only may disclose that patient safety work product to other law enforcement authorities as needed for law enforcement activities related to the event that gave rise to the disclosure under paragraph (b)(10)(i) of this section.

(c) *Safe harbor.* A provider or responsible person, but not a PSO, is not considered to have violated the requirements of this subpart if a member of its workforce discloses patient safety work product, provided that the disclosure does not include materials, including oral statements, that:

(1) Assess the quality of care of an identifiable provider; or

(2) Describe or pertain to one or more actions or failures to act by an identifiable provider.

(d) *Implementation and enforcement by the Secretary*. The confidentiality provisions shall not apply to (and shall not be construed to prohibit) disclosures of relevant patient safety work product to or by the Secretary if such patient safety work product is needed to investigate or determine compliance or to seek or impose civil money penalties, with respect to this part or the HIPAA Privacy Rule, or to make or support decisions with respect to listing of a PSO.

(e) *No limitation on authority to limit or delegate disclosure or use*. Nothing in subpart C of this part shall be construed to limit the authority of any person to enter into a contract requiring greater confidentiality or delegating authority to make a disclosure or use in accordance with this subpart.

§3.208 Continued protection of patient safety work product.

(a) Except as provided in paragraph (b) of this section, patient safety work product disclosed in accordance with this subpart, or disclosed impermissibly, shall continue to be privileged and confidential.

(b)(1) Patient safety work product disclosed for use in a criminal proceeding pursuant to section 922(c)(1)(A) of the Public Health Service Act, 42 U.S.C. 299b–22(c)(1)(A), and/or pursuant to §3.206(b)(1) of this subpart continues to be privileged, but is no longer confidential.

(2) Non-identifiable patient safety work product that is disclosed is no longer privileged or confidential and not subject to the regulations under this part.

(3) Paragraph (b) of this section applies only to the specific patient safety work product disclosed.

§3.210 Required disclosure of patient safety work product to the Secretary.

Notwithstanding any other provision in this part, providers, PSOs, and responsible persons must disclose patient safety work product upon request by the Secretary when the Secretary determines such patient safety work product is needed to investigate or determine compliance or to seek or impose civil money penalties, with respect to this part or the HIPAA Privacy Rule, or to make or support decisions with respect to listing of a PSO.

§3.212 Nonidentification of patient safety work product.

(a) Patient safety work product is nonidentifiable with respect to a particular identified provider or a particular identified reporter if:

(1) A person with appropriate knowledge of and experience with generally accepted statistical and scientific principles and methods for rendering information not individually identifiable:

(i) Applying such principles and methods, determines that the risk is very small that the information could be used, alone or in combination with other reasonably available information, by an anticipated recipient to identify an identified provider or reporter; and

(ii) Documents the methods and results of the analysis that justify such determination; or

(2)(i) The following identifiers of such provider or reporter and of affiliated organizations, corporate parents, subsidiaries, practice partners, employers, members of the workforce, or household members of such providers or reporters are removed:

(A) The direct identifiers listed at §3.206(b)(4)(iv)(A)(*1*) through (*13*) of this subpart;

(B) Geographic subdivisions smaller than a State, including street address, city, county, precinct, zip code and equivalent geocodes, except for the initial three digits of a zip code if, according to the current publicly available data from the Bureau of the Census, the geographic unit formed by combining all zip codes with the same three initial digits contains more than 20,000 people;

(C) All elements of dates (except year) for dates directly related to a patient safety incident or event; and

(D) Any other unique identifying number, characteristic, or code except as permitted for re-identification; and

(ii) The provider, PSO or responsible person making the disclosure does not

have actual knowledge that the information could be used, alone or in combination with other information that is reasonably available to the intended recipient, to identify the particular provider or reporter.

(3) *Re-identification*. A provider, PSO, or responsible person may assign a code or other means of record identification to allow information made nonidentifiable under this section to be re-identified by such provider, PSO, or responsible person, provided that:

(i) The code or other means of record identification is not derived from or related to information about the provider or reporter and is not otherwise capable of being translated so as to identify the provider or reporter; and

(ii) The provider, PSO, or responsible person does not use or disclose the code or other means of record identification for any other purpose, and does not disclose the mechanism for re-identification.

(b) Patient safety work product is non-identifiable with respect to a particular patient only if the individually identifiable health information regarding that patient is de-identified in accordance with the HIPAA Privacy Rule standard and implementation specifications for the de-identification at 45 CFR 164.514(a) through (c).

Subpart D—Enforcement Program

§ 3.304 Principles for achieving compliance.

(a) *Cooperation*. The Secretary will, to the extent practicable, seek the cooperation of providers, PSOs, and responsible persons in obtaining compliance with the applicable confidentiality provisions.

(b) *Assistance*. The Secretary may provide technical assistance to providers, PSOs, and responsible persons to help them comply voluntarily with the applicable confidentiality provisions.

§ 3.306 Complaints to the Secretary.

(a) *Right to file a complaint*. A person who believes that patient safety work product has been disclosed in violation of the confidentiality provisions may file a complaint with the Secretary.

(b) *Requirements for filing complaints*. Complaints under this section must meet the following requirements:

(1) A complaint must be filed in writing, either on paper or electronically.

(2) A complaint must name the person that is the subject of the complaint and describe the act(s) believed to be in violation of the applicable confidentiality provision(s).

(3) A complaint must be filed within 180 days of when the complainant knew or should have known that the act complained of occurred, unless this time limit is waived by the Secretary for good cause shown.

(4) The Secretary may prescribe additional procedures for the filing of complaints, as well as the place and manner of filing, by notice in the FEDERAL REGISTER.

(c) *Investigation*. The Secretary may investigate complaints filed under this section. Such investigation may include a review of the pertinent policies, procedures, or practices of the respondent and of the circumstances regarding any alleged violation. At the time of initial written communication with the respondent about the complaint, the Secretary will describe the act(s) that are the basis of the complaint.

§ 3.308 Compliance reviews.

The Secretary may conduct compliance reviews to determine whether a respondent is complying with the applicable confidentiality provisions.

§ 3.310 Responsibilities of respondents.

(a) *Provide records and compliance reports*. A respondent must keep such records and submit such compliance reports, in such time and manner and containing such information, as the Secretary may determine to be necessary to enable the Secretary to ascertain whether the respondent has complied or is complying with the applicable confidentiality provisions.

(b) *Cooperate with complaint investigations and compliance reviews*. A respondent must cooperate with the Secretary, if the Secretary undertakes an investigation or compliance review of the policies, procedures, or practices of the respondent to determine whether it is complying with the applicable confidentiality provisions.

(c) *Permit access to information.* (1) A respondent must permit access by the Secretary during normal business hours to its facilities, books, records, accounts, and other sources of information, including patient safety work product, that are pertinent to ascertaining compliance with the applicable confidentiality provisions. If the Secretary determines that exigent circumstances exist, such as when documents may be hidden or destroyed, a respondent must permit access by the Secretary at any time and without notice.

(2) If any information required of a respondent under this section is in the exclusive possession of any other agency, institution, or person, and the other agency, institution, or person fails or refuses to furnish the information, the respondent must so certify and set forth what efforts it has made to obtain the information.

§3.312 Secretarial action regarding complaints and compliance reviews.

(a) *Resolution when noncompliance is indicated.* (1) If an investigation of a complaint pursuant to §3.306 of this subpart or a compliance review pursuant to §3.308 of this subpart indicates noncompliance, the Secretary may attempt to reach a resolution of the matter satisfactory to the Secretary by informal means. Informal means may include demonstrated compliance or a completed corrective action plan or other agreement.

(2) If the matter is resolved by informal means, the Secretary will so inform the respondent and, if the matter arose from a complaint, the complainant, in writing.

(3) If the matter is not resolved by informal means, the Secretary will—

(i) So inform the respondent and provide the respondent an opportunity to submit written evidence of any mitigating factors. The respondent must submit any evidence to the Secretary within 30 days (computed in the same manner as prescribed under §3.526 of this subpart) of receipt of such notification; and

(ii) If, following action pursuant to paragraph (a)(3)(i) of this section, the Secretary decides that a civil money penalty should be imposed, inform the respondent of such finding in a notice of proposed determination in accordance with §3.420 of this subpart.

(b) *Resolution when no violation is found.* If, after an investigation pursuant to §3.306 of this subpart or a compliance review pursuant to §3.308 of this subpart, the Secretary determines that further action is not warranted, the Secretary will so inform the respondent and, if the matter arose from a complaint, the complainant, in writing.

(c) *Uses and disclosures of information obtained.* (1) Identifiable patient safety work product obtained by the Secretary in connection with an investigation or compliance review under this subpart will not be disclosed by the Secretary, except in accordance with §3.206(d) of this subpart, or if otherwise permitted by this part or the Patient Safety Act.

(2) Except as provided for in paragraph (c)(1) of this section, information, including testimony and other evidence, obtained by the Secretary in connection with an investigation or compliance review under this subpart may be used by HHS in any of its activities and may be used or offered into evidence in any administrative or judicial proceeding.

§3.314 Investigational subpoenas and inquiries.

(a) The Secretary may issue subpoenas in accordance with 42 U.S.C. 405(d) and (e), and 1320a–7a(j), to require the attendance and testimony of witnesses and the production of any other evidence including patient safety work product during an investigation or compliance review pursuant to this part.

(1) A subpoena issued under this paragraph must—

(i) State the name of the person (including the entity, if applicable) to whom the subpoena is addressed;

(ii) State the statutory authority for the subpoena;

(iii) Indicate the date, time, and place that the testimony will take place;

(iv) Include a reasonably specific description of any documents or items required to be produced; and

(v) If the subpoena is addressed to an entity, describe with reasonable particularity the subject matter on which testimony is required. In that event, the entity must designate one or more natural persons who will testify on its behalf, and must state as to each such person that person's name and address and the matters on which he or she will testify. The designated person must testify as to matters known or reasonably available to the entity.

(2) A subpoena under this section must be served by—

(i) Delivering a copy to the natural person named in the subpoena or to the entity named in the subpoena at its last principal place of business; or

(ii) Registered or certified mail addressed to the natural person at his or her last known dwelling place or to the entity at its last known principal place of business.

(3) A verified return by the natural person serving the subpoena setting forth the manner of service or, in the case of service by registered or certified mail, the signed return post office receipt, constitutes proof of service.

(4) Witnesses are entitled to the same fees and mileage as witnesses in the district courts of the United States (28 U.S.C. 1821 and 1825). Fees need not be paid at the time the subpoena is served.

(5) A subpoena under this section is enforceable through the district court of the United States for the district where the subpoenaed natural person resides or is found or where the entity transacts business.

(b) Investigational inquiries are nonpublic investigational proceedings conducted by the Secretary.

(1) Testimony at investigational inquiries will be taken under oath or affirmation.

(2) Attendance of non-witnesses is discretionary with the Secretary, except that a witness is entitled to be accompanied, represented, and advised by an attorney.

(3) Representatives of the Secretary are entitled to attend and ask questions.

(4) A witness will have the opportunity to clarify his or her answers on the record following questioning by the Secretary.

(5) Any claim of privilege must be asserted by the witness on the record.

(6) Objections must be asserted on the record. Errors of any kind that might be corrected if promptly presented will be deemed to be waived unless reasonable objection is made at the investigational inquiry. Except where the objection is on the grounds of privilege, the question will be answered on the record, subject to objection.

(7) If a witness refuses to answer any question not privileged or to produce requested documents or items, or engages in conduct likely to delay or obstruct the investigational inquiry, the Secretary may seek enforcement of the subpoena under paragraph (a)(5) of this section.

(8) The proceedings will be recorded and transcribed. The witness is entitled to a copy of the transcript, upon payment of prescribed costs, except that, for good cause, the witness may be limited to inspection of the official transcript of his or her testimony.

(9)(i) The transcript will be submitted to the witness for signature.

(A) Where the witness will be provided a copy of the transcript, the transcript will be submitted to the witness for signature. The witness may submit to the Secretary written proposed corrections to the transcript, with such corrections attached to the transcript. If the witness does not return a signed copy of the transcript or proposed corrections within 30 days (computed in the same manner as prescribed under § 3.526 of this part) of its being submitted to him or her for signature, the witness will be deemed to have agreed that the transcript is true and accurate.

(B) Where, as provided in paragraph (b)(8) of this section, the witness is limited to inspecting the transcript, the witness will have the opportunity at the time of inspection to propose corrections to the transcript, with corrections attached to the transcript. The witness will also have the opportunity to sign the transcript. If the witness does not sign the transcript or offer corrections within 30 days (computed in the same manner as prescribed

under §3.526 of this part) of receipt of notice of the opportunity to inspect the transcript, the witness will be deemed to have agreed that the transcript is true and accurate.

(ii) The Secretary's proposed corrections to the record of transcript will be attached to the transcript.

§3.402 Basis for a civil money penalty.

(a) *General rule.* A person who discloses identifiable patient safety work product in knowing or reckless violation of the confidentiality provisions shall be subject to a civil money penalty for each act constituting such violation.

(b) *Violation attributed to a principal.* A principal is independently liable, in accordance with the federal common law of agency, for a civil money penalty based on the act of the principal's agent, including a workforce member, acting within the scope of the agency if such act could give rise to a civil money penalty in accordance with §3.402(a) of this subpart.

§3.404 Amount of a civil money penalty.

(a) The amount of a civil money penalty will be determined in accordance with paragraph (b) of this section and §3.408 of this subpart.

(b) The Secretary may impose a civil money penalty in the amount of not more than $11,000.

[73 FR 70796, Nov. 21, 2008, as amended at 74 FR 42779, Aug. 25, 2009]

§3.408 Factors considered in determining the amount of a civil money penalty.

In determining the amount of any civil money penalty, the Secretary may consider as aggravating or mitigating factors, as appropriate, any of the following:

(a) The nature of the violation.

(b) The circumstances, including the consequences, of the violation, including:

(1) The time period during which the violation(s) occurred; and

(2) Whether the violation caused physical or financial harm or reputational damage;

(c) The degree of culpability of the respondent, including:

(1) Whether the violation was intentional; and

(2) Whether the violation was beyond the direct control of the respondent.

(d) Any history of prior compliance with the Patient Safety Act, including violations, by the respondent, including:

(1) Whether the current violation is the same or similar to prior violation(s);

(2) Whether and to what extent the respondent has attempted to correct previous violations;

(3) How the respondent has responded to technical assistance from the Secretary provided in the context of a compliance effort; and

(4) How the respondent has responded to prior complaints.

(e) The financial condition of the respondent, including:

(1) Whether the respondent had financial difficulties that affected its ability to comply;

(2) Whether the imposition of a civil money penalty would jeopardize the ability of the respondent to continue to provide health care or patient safety activities; and

(3) The size of the respondent.

(f) Such other matters as justice may require.

§3.414 Limitations.

No action under this subpart may be entertained unless commenced by the Secretary, in accordance with §3.420 of this subpart, within 6 years from the date of the occurrence of the violation.

§3.416 Authority to settle.

Nothing in this subpart limits the authority of the Secretary to settle any issue or case or to compromise any penalty.

§3.418 Exclusivity of penalty.

(a) Except as otherwise provided by paragraph (b) of this section, a penalty imposed under this part is in addition to any other penalty prescribed by law.

(b) Civil money penalties shall not be imposed both under this part and under the HIPAA Privacy Rule (45 CFR parts 160 and 164).

§ 3.420 Notice of proposed determination.

(a) If a penalty is proposed in accordance with this part, the Secretary must deliver, or send by certified mail with return receipt requested, to the respondent, written notice of the Secretary's intent to impose a penalty. This notice of proposed determination must include:

(1) Reference to the statutory basis for the penalty;

(2) A description of the findings of fact regarding the violations with respect to which the penalty is proposed;

(3) The reason(s) why the violation(s) subject(s) the respondent to a penalty;

(4) The amount of the proposed penalty;

(5) Any factors described in § 3.408 of this subpart that were considered in determining the amount of the proposed penalty; and

(6) Instructions for responding to the notice, including a statement of the respondent's right to a hearing, a statement that failure to request a hearing within 60 days permits the imposition of the proposed penalty without the right to a hearing under § 3.504 of this subpart or a right of appeal under § 3.548 of this subpart, and the address to which the hearing request must be sent.

(b) The respondent may request a hearing before an ALJ on the proposed penalty by filing a request in accordance with § 3.504 of this subpart.

§ 3.422 Failure to request a hearing.

If the respondent does not request a hearing within the time prescribed by § 3.504 of this subpart and the matter is not settled pursuant to § 3.416 of this subpart, the Secretary may impose the proposed penalty or any lesser penalty permitted by sections 921 through 926 of the Public Health Service Act, 42 U.S.C. 299b–21 through 299b–26. The Secretary will notify the respondent by certified mail, return receipt requested, of any penalty that has been imposed and of the means by which the respondent may satisfy the penalty, and the penalty is final on receipt of the notice. The respondent has no right to appeal a penalty under § 3.548 of this subpart with respect to which the respondent has not timely requested a hearing.

§ 3.424 Collection of penalty.

(a) Once a determination of the Secretary to impose a penalty has become final, the penalty will be collected by the Secretary, subject to the first sentence of 42 U.S.C. 1320a–7a(f).

(b) The penalty may be recovered in a civil action brought in the United States district court for the district where the respondent resides, is found, or is located.

(c) The amount of a penalty, when finally determined, or the amount agreed upon in compromise, may be deducted from any sum then or later owing by the United States, or by a State agency, to the respondent.

(d) Matters that were raised or that could have been raised in a hearing before an ALJ, or in an appeal under 42 U.S.C. 1320a–7a(e), may not be raised as a defense in a civil action by the United States to collect a penalty under this part.

§ 3.426 Notification of the public and other agencies.

Whenever a proposed penalty becomes final, the Secretary will notify, in such manner as the Secretary deems appropriate, the public and the following organizations and entities thereof and the reason it was imposed: The appropriate State or local medical or professional organization, the appropriate State agency or agencies administering or supervising the administration of State health care programs (as defined in 42 U.S.C. 1320a–7(h)), the appropriate utilization and quality control peer review organization, and the appropriate State or local licensing agency or organization (including the agency specified in 42 U.S.C. 1395aa(a), 1396a(a)(33)).

§ 3.504 Hearings before an ALJ.

(a) A respondent may request a hearing before an ALJ. The parties to the hearing proceeding consist of—

(1) The respondent; and

(2) The officer(s) or employee(s) of HHS to whom the enforcement authority involved has been delegated.

(b) The request for a hearing must be made in writing signed by the respondent or by the respondent's attorney and sent by certified mail, return receipt requested, to the address specified in the notice of proposed determination. The request for a hearing must be mailed within 60 days after notice of the proposed determination is received by the respondent. For purposes of this section, the respondent's date of receipt of the notice of proposed determination is presumed to be 5 days after the date of the notice unless the respondent makes a reasonable showing to the contrary to the ALJ.

(c) The request for a hearing must clearly and directly admit, deny, or explain each of the findings of fact contained in the notice of proposed determination with regard to which the respondent has any knowledge. If the respondent has no knowledge of a particular finding of fact and so states, the finding shall be deemed denied. The request for a hearing must also state the circumstances or arguments that the respondent alleges constitute the grounds for any defense and the factual and legal basis for opposing the penalty.

(d) The ALJ must dismiss a hearing request where—

(1) On motion of the Secretary, the ALJ determines that the respondent's hearing request is not timely filed as required by paragraph (b) or does not meet the requirements of paragraph (c) of this section;

(2) The respondent withdraws the request for a hearing;

(3) The respondent abandons the request for a hearing; or

(4) The respondent's hearing request fails to raise any issue that may properly be addressed in a hearing.

§ 3.506 Rights of the parties.

(a) Except as otherwise limited by this subpart, each party may—

(1) Be accompanied, represented, and advised by an attorney;

(2) Participate in any conference held by the ALJ;

(3) Conduct discovery of documents as permitted by this subpart;

(4) Agree to stipulations of fact or law that will be made part of the record;

(5) Present evidence relevant to the issues at the hearing;

(6) Present and cross-examine witnesses;

(7) Present oral arguments at the hearing as permitted by the ALJ; and

(8) Submit written briefs and proposed findings of fact and conclusions of law after the hearing.

(b) A party may appear in person or by a representative. Natural persons who appear as an attorney or other representative must conform to the standards of conduct and ethics required of practitioners before the courts of the United States.

(c) Fees for any services performed on behalf of a party by an attorney are not subject to the provisions of 42 U.S.C. 406, which authorizes the Secretary to specify or limit their fees.

§ 3.508 Authority of the ALJ.

(a) The ALJ must conduct a fair and impartial hearing, avoid delay, maintain order, and ensure that a record of the proceeding is made.

(b) The ALJ may—

(1) Set and change the date, time and place of the hearing upon reasonable notice to the parties;

(2) Continue or recess the hearing in whole or in part for a reasonable period of time;

(3) Hold conferences to identify or simplify the issues, or to consider other matters that may aid in the expeditious disposition of the proceeding;

(4) Administer oaths and affirmations;

(5) Issue subpoenas requiring the attendance of witnesses at hearings and the production of documents at or in relation to hearings;

(6) Rule on motions and other procedural matters;

(7) Regulate the scope and timing of documentary discovery as permitted by this subpart;

(8) Regulate the course of the hearing and the conduct of representatives, parties, and witnesses;

(9) Examine witnesses;

(10) Receive, rule on, exclude, or limit evidence;

(11) Upon motion of a party, take official notice of facts;

(12) Conduct any conference, argument or hearing in person or, upon

agreement of the parties, by telephone; and

(13) Upon motion of a party, decide cases, in whole or in part, by summary judgment where there is no disputed issue of material fact. A summary judgment decision constitutes a hearing on the record for the purposes of this subpart.

(c) The ALJ—

(1) May not find invalid or refuse to follow Federal statutes, regulations, or Secretarial delegations of authority and must give deference to published guidance to the extent not inconsistent with statute or regulation;

(2) May not enter an order in the nature of a directed verdict;

(3) May not compel settlement negotiations; or

(4) May not enjoin any act of the Secretary.

§ 3.510 Ex parte contacts.

No party or person (except employees of the ALJ's office) may communicate in any way with the ALJ on any matter at issue in a case, unless on notice and opportunity for both parties to participate. This provision does not prohibit a party or person from inquiring about the status of a case or asking routine questions concerning administrative functions or procedures.

§ 3.512 Prehearing conferences.

(a) The ALJ must schedule at least one prehearing conference, and may schedule additional prehearing conferences as appropriate, upon reasonable notice, which may not be less than 14 business days, to the parties.

(b) The ALJ may use prehearing conferences to discuss the following—

(1) Simplification of the issues;

(2) The necessity or desirability of amendments to the pleadings, including the need for a more definite statement;

(3) Stipulations and admissions of fact or as to the contents and authenticity of documents;

(4) Whether the parties can agree to submission of the case on a stipulated record;

(5) Whether a party chooses to waive appearance at an oral hearing and to submit only documentary evidence (subject to the objection of the other party) and written argument;

(6) Limitation of the number of witnesses;

(7) Scheduling dates for the exchange of witness lists and of proposed exhibits;

(8) Discovery of documents as permitted by this subpart;

(9) The time and place for the hearing;

(10) The potential for the settlement of the case by the parties; and

(11) Other matters as may tend to encourage the fair, just and expeditious disposition of the proceedings, including the protection of confidentiality of identifiable patient safety work product that may be submitted into evidence or otherwise used in the proceeding, if appropriate.

(c) The ALJ must issue an order containing the matters agreed upon by the parties or ordered by the ALJ at a prehearing conference.

§ 3.514 Authority to settle.

The Secretary has exclusive authority to settle any issue or case without the consent of the ALJ.

§ 3.516 Discovery.

(a) A party may make a request to another party for production of documents for inspection and copying that are relevant and material to the issues before the ALJ.

(b) For the purpose of this section, the term ''documents'' includes information, reports, answers, records, accounts, papers and other data and documentary evidence. Nothing contained in this section may be interpreted to require the creation of a document, except that requested data stored in an electronic data storage system must be produced in a form accessible to the requesting party.

(c) Requests for documents, requests for admissions, written interrogatories, depositions and any forms of discovery, other than those permitted under paragraph (a) of this section, are not authorized.

(d) This section may not be construed to require the disclosure of interview reports or statements obtained by any party, or on behalf of any party, of persons who will not be called as witnesses

by that party, or analyses and summaries prepared in conjunction with the investigation or litigation of the case, or any otherwise privileged documents.

(e)(1) When a request for production of documents has been received, within 30 days the party receiving that request must either fully respond to the request, or state that the request is being objected to and the reasons for that objection. If objection is made to part of an item or category, the part must be specified. Upon receiving any objections, the party seeking production may then, within 30 days or any other time frame set by the ALJ, file a motion for an order compelling discovery. The party receiving a request for production may also file a motion for protective order any time before the date the production is due.

(2) The ALJ may grant a motion for protective order or deny a motion for an order compelling discovery if the ALJ finds that the discovery sought—

(i) Is irrelevant;

(ii) Is unduly costly or burdensome;

(iii) Will unduly delay the proceeding; or

(iv) Seeks privileged information.

(3) The ALJ may extend any of the time frames set forth in paragraph (e)(1) of this section.

(4) The burden of showing that discovery should be allowed is on the party seeking discovery.

§ 3.518 Exchange of witness lists, witness statements, and exhibits.

(a) The parties must exchange witness lists, copies of prior written statements of proposed witnesses, and copies of proposed hearing exhibits, including copies of any written statements that the party intends to offer in lieu of live testimony in accordance with § 3.538, not more than 60, and not less than 15, days before the scheduled hearing.

(b)(1) If, at any time, a party objects to the proposed admission of evidence not exchanged in accordance with paragraph (a) of this section, the ALJ must determine whether the failure to comply with paragraph (a) of this section should result in the exclusion of that evidence.

(2) Unless the ALJ finds that extraordinary circumstances justified the failure timely to exchange the information listed under paragraph (a) of this section, the ALJ must exclude from the party's case-in-chief—

(i) The testimony of any witness whose name does not appear on the witness list; and

(ii) Any exhibit not provided to the opposing party as specified in paragraph (a) of this section.

(3) If the ALJ finds that extraordinary circumstances existed, the ALJ must then determine whether the admission of that evidence would cause substantial prejudice to the objecting party.

(i) If the ALJ finds that there is no substantial prejudice, the evidence may be admitted.

(ii) If the ALJ finds that there is substantial prejudice, the ALJ may exclude the evidence, or, if he or she does not exclude the evidence, must postpone the hearing for such time as is necessary for the objecting party to prepare and respond to the evidence, unless the objecting party waives postponement.

(c) Unless the other party objects within a reasonable period of time before the hearing, documents exchanged in accordance with paragraph (a) of this section will be deemed to be authentic for the purpose of admissibility at the hearing.

§ 3.520 Subpoenas for attendance at hearing.

(a) A party wishing to procure the appearance and testimony of any person at the hearing may make a motion requesting the ALJ to issue a subpoena if the appearance and testimony are reasonably necessary for the presentation of a party's case.

(b) A subpoena requiring the attendance of a person in accordance with paragraph (a) of this section may also require the person (whether or not the person is a party) to produce relevant and material evidence at or before the hearing.

(c) When a subpoena is served by a respondent on a particular employee or official or particular office of HHS, the Secretary may comply by designating

any knowledgeable HHS representative to appear and testify.

(d) A party seeking a subpoena must file a written motion not less than 30 days before the date fixed for the hearing, unless otherwise allowed by the ALJ for good cause shown. That motion must—

(1) Specify any evidence to be produced;

(2) Designate the witnesses; and

(3) Describe the address and location with sufficient particularity to permit those witnesses to be found.

(e) The subpoena must specify the time and place at which the witness is to appear and any evidence the witness is to produce.

(f) Within 15 days after the written motion requesting issuance of a subpoena is served, any party may file an opposition or other response.

(g) If the motion requesting issuance of a subpoena is granted, the party seeking the subpoena must serve it by delivery to the person named, or by certified mail addressed to that person at the person's last dwelling place or principal place of business.

(h) The person to whom the subpoena is directed may file with the ALJ a motion to quash the subpoena within 10 days after service.

(i) The exclusive remedy for contumacy by, or refusal to obey a subpoena duly served upon, any person is specified in 42 U.S.C. 405(e).

§ 3.522 Fees.

The party requesting a subpoena must pay the cost of the fees and mileage of any witness subpoenaed in the amounts that would be payable to a witness in a proceeding in United States District Court. A check for witness fees and mileage must accompany the subpoena when served, except that, when a subpoena is issued on behalf of the Secretary, a check for witness fees and mileage need not accompany the subpoena.

§ 3.524 Form, filing, and service of papers.

(a) *Forms.* (1) Unless the ALJ directs the parties to do otherwise, documents filed with the ALJ must include an original and two copies.

(2) Every pleading and paper filed in the proceeding must contain a caption setting forth the title of the action, the case number, and a designation of the paper, such as motion to quash subpoena.

(3) Every pleading and paper must be signed by and must contain the address and telephone number of the party or the person on whose behalf the paper was filed, or his or her representative.

(4) Papers are considered filed when they are mailed.

(b) *Service.* A party filing a document with the ALJ or the Board must, at the time of filing, serve a copy of the document on the other party. Service upon any party of any document must be made by delivering a copy, or placing a copy of the document in the United States mail, postage prepaid and addressed, or with a private delivery service, to the party's last known address. When a party is represented by an attorney, service must be made upon the attorney in lieu of the party.

(c) *Proof of service.* A certificate of the natural person serving the document by personal delivery or by mail, setting forth the manner of service, constitutes proof of service.

§ 3.526 Computation of time.

(a) In computing any period of time under this subpart or in an order issued thereunder, the time begins with the day following the act, event or default, and includes the last day of the period unless it is a Saturday, Sunday, or legal holiday observed by the Federal Government, in which event it includes the next business day.

(b) When the period of time allowed is less than 7 days, intermediate Saturdays, Sundays, and legal holidays observed by the Federal Government must be excluded from the computation.

(c) Where a document has been served or issued by placing it in the mail, an additional 5 days must be added to the time permitted for any response. This paragraph does not apply to requests for hearing under § 3.504.

§ 3.528 Motions.

(a) An application to the ALJ for an order or ruling must be by motion. Motions must state the relief sought, the

authority relied upon and the facts alleged, and must be filed with the ALJ and served on all other parties.

(b) Except for motions made during a prehearing conference or at the hearing, all motions must be in writing. The ALJ may require that oral motions be reduced to writing.

(c) Within 10 days after a written motion is served, or such other time as may be fixed by the ALJ, any party may file a response to the motion.

(d) The ALJ may not grant a written motion before the time for filing responses has expired, except upon consent of the parties or following a hearing on the motion, but may overrule or deny the motion without awaiting a response.

(e) The ALJ must make a reasonable effort to dispose of all outstanding motions before the beginning of the hearing.

§ 3.530 Sanctions.

The ALJ may sanction a person, including any party or attorney, for failing to comply with an order or procedure, for failing to defend an action or for other misconduct that interferes with the speedy, orderly or fair conduct of the hearing. The sanctions must reasonably relate to the severity and nature of the failure or misconduct. The sanctions may include—

(a) In the case of refusal to provide or permit discovery under the terms of this part, drawing negative factual inferences or treating the refusal as an admission by deeming the matter, or certain facts, to be established;

(b) Prohibiting a party from introducing certain evidence or otherwise supporting a particular claim or defense;

(c) Striking pleadings, in whole or in part;

(d) Staying the proceedings;

(e) Dismissal of the action;

(f) Entering a decision by default;

(g) Ordering the party or attorney to pay the attorney's fees and other costs caused by the failure or misconduct; and

(h) Refusing to consider any motion or other action that is not filed in a timely manner.

§ 3.532 Collateral estoppel.

When a final determination that the respondent violated a confidentiality provision has been rendered in any proceeding in which the respondent was a party and had an opportunity to be heard, the respondent is bound by that determination in any proceeding under this part.

§ 3.534 The hearing.

(a) The ALJ must conduct a hearing on the record in order to determine whether the respondent should be found liable under this part.

(b)(1) The respondent has the burden of going forward and the burden of persuasion with respect to any challenge to the amount of a proposed penalty pursuant to §§ 3.404 and 3.408, including any factors raised as mitigating factors.

(2) The Secretary has the burden of going forward and the burden of persuasion with respect to all other issues, including issues of liability and the existence of any factors considered as aggravating factors in determining the amount of the proposed penalty.

(3) The burden of persuasion will be judged by a preponderance of the evidence.

(c) The hearing must be open to the public unless otherwise ordered by the ALJ for good cause shown, which may be that identifiable patient safety work product has been introduced into evidence or is expected to be introduced into evidence.

(d)(1) Subject to the 15-day rule under § 3.518(a) and the admissibility of evidence under § 3.540, either party may introduce, during its case in chief, items or information that arose or became known after the date of the issuance of the notice of proposed determination or the request for hearing, as applicable. Such items and information may not be admitted into evidence, if introduced—

(i) By the Secretary, unless they are material and relevant to the acts or omissions with respect to which the penalty is proposed in the notice of proposed determination pursuant to § 3.420 of this part, including circumstances that may increase penalties; or

(ii) By the respondent, unless they are material and relevant to an admission, denial or explanation of a finding of fact in the notice of proposed determination under § 3.420 of this part, or to a specific circumstance or argument expressly stated in the request for hearing under § 3.504, including circumstances that may reduce penalties.

(2) After both parties have presented their cases, evidence may be admitted in rebuttal even if not previously exchanged in accordance with § 3.518.

§ 3.538 Witnesses.

(a) Except as provided in paragraph (b) of this section, testimony at the hearing must be given orally by witnesses under oath or affirmation.

(b) At the discretion of the ALJ, testimony of witnesses other than the testimony of expert witnesses may be admitted in the form of a written statement. The ALJ may, at his or her discretion, admit prior sworn testimony of experts that has been subject to adverse examination, such as a deposition or trial testimony. Any such written statement must be provided to the other party, along with the last known address of the witness, in a manner that allows sufficient time for the other party to subpoena the witness for cross-examination at the hearing. Prior written statements of witnesses proposed to testify at the hearing must be exchanged as provided in § 3.518.

(c) The ALJ must exercise reasonable control over the mode and order of interrogating witnesses and presenting evidence so as to:

(1) Make the interrogation and presentation effective for the ascertainment of the truth;

(2) Avoid repetition or needless consumption of time; and

(3) Protect witnesses from harassment or undue embarrassment.

(d) The ALJ must permit the parties to conduct cross-examination of witnesses as may be required for a full and true disclosure of the facts.

(e) The ALJ may order witnesses excluded so that they cannot hear the testimony of other witnesses, except that the ALJ may not order to be excluded—

(1) A party who is a natural person;

(2) In the case of a party that is not a natural person, the officer or employee of the party appearing for the entity pro se or designated as the party's representative; or

(3) A natural person whose presence is shown by a party to be essential to the presentation of its case, including a person engaged in assisting the attorney for the Secretary.

§ 3.540 Evidence.

(a) The ALJ must determine the admissibility of evidence.

(b) Except as provided in this subpart, the ALJ is not bound by the Federal Rules of Evidence. However, the ALJ may apply the Federal Rules of Evidence where appropriate, for example, to exclude unreliable evidence.

(c) The ALJ must exclude irrelevant or immaterial evidence.

(d) Although relevant, evidence may be excluded if its probative value is substantially outweighed by the danger of unfair prejudice, confusion of the issues, or by considerations of undue delay or needless presentation of cumulative evidence.

(e) Although relevant, evidence must be excluded if it is privileged under Federal law.

(f) Evidence concerning offers of compromise or settlement is inadmissible to the extent provided in Rule 408 of the Federal Rules of Evidence.

(g) Evidence of crimes, wrongs, or acts other than those at issue in the instant case is admissible in order to show motive, opportunity, intent, knowledge, preparation, identity, lack of mistake, or existence of a scheme. This evidence is admissible regardless of whether the crimes, wrongs, or acts occurred during the statute of limitations period applicable to the acts or omissions that constitute the basis for liability in the case and regardless of whether they were referenced in the Secretary's notice of proposed determination under § 3.420.

(h) The ALJ must permit the parties to introduce rebuttal witnesses and evidence.

(i) All documents and other evidence offered or taken for the record must be open to examination by both parties, unless otherwise ordered by the ALJ for good cause shown.

§ 3.542 The record.

(a) The hearing must be recorded and transcribed. Transcripts may be obtained following the hearing from the ALJ. A party that requests a transcript of hearing proceedings must pay the cost of preparing the transcript unless, for good cause shown by the party, the payment is waived by the ALJ or the Board, as appropriate.

(b) The transcript of the testimony, exhibits, and other evidence admitted at the hearing, and all papers and requests filed in the proceeding constitute the record for decision by the ALJ and the Secretary.

(c) The record may be inspected and copied (upon payment of a reasonable fee) by any person, unless otherwise ordered by the ALJ for good cause shown, which may include the presence in the record of identifiable patient safety work product.

(d) For good cause, which may include the presence in the record of identifiable patient safety work product, the ALJ may order appropriate redactions made to the record.

§ 3.544 Post hearing briefs.

The ALJ may require the parties to file post-hearing briefs. In any event, any party may file a post-hearing brief. The ALJ must fix the time for filing the briefs. The time for filing may not exceed 60 days from the date the parties receive the transcript of the hearing or, if applicable, the stipulated record. The briefs may be accompanied by proposed findings of fact and conclusions of law. The ALJ may permit the parties to file reply briefs.

§ 3.546 ALJ's decision.

(a) The ALJ must issue a decision, based only on the record, which must contain findings of fact and conclusions of law.

(b) The ALJ may affirm, increase, or reduce the penalties imposed by the Secretary.

(c) The ALJ must issue the decision to both parties within 60 days after the time for submission of post-hearing briefs and reply briefs, if permitted, has expired. If the ALJ fails to meet the deadline contained in this paragraph, he or she must notify the parties of the reason for the delay and set a new deadline.

(d) Unless the decision of the ALJ is timely appealed as provided for in § 3.548, the decision of the ALJ will be final and binding on the parties 60 days from the date of service of the ALJ's decision.

§ 3.548 Appeal of the ALJ's decision.

(a) Any party may appeal the decision of the ALJ to the Board by filing a notice of appeal with the Board within 30 days of the date of service of the ALJ decision. The Board may extend the initial 30 day period for a period of time not to exceed 30 days if a party files with the Board a request for an extension within the initial 30 day period and shows good cause.

(b) If a party files a timely notice of appeal with the Board, the ALJ must forward the record of the proceeding to the Board.

(c) A notice of appeal must be accompanied by a written brief specifying exceptions to the initial decision and reasons supporting the exceptions. Any party may file a brief in opposition to the exceptions, which may raise any relevant issue not addressed in the exceptions, within 30 days of receiving the notice of appeal and the accompanying brief. The Board may permit the parties to file reply briefs.

(d) There is no right to appear personally before the Board or to appeal to the Board any interlocutory ruling by the ALJ.

(e) The Board may not consider any issue not raised in the parties' briefs, nor any issue in the briefs that could have been raised before the ALJ but was not.

(f) If any party demonstrates to the satisfaction of the Board that additional evidence not presented at such hearing is relevant and material and that there were reasonable grounds for the failure to adduce such evidence at the hearing, the Board may remand the matter to the ALJ for consideration of such additional evidence.

(g) The Board may decline to review the case, or may affirm, increase, reduce, reverse or remand any penalty determined by the ALJ.

(h) The standard of review on a disputed issue of fact is whether the initial decision of the ALJ is supported by substantial evidence on the whole record. The standard of review on a disputed issue of law is whether the decision is erroneous.

(i) Within 60 days after the time for submission of briefs and reply briefs, if permitted, has expired, the Board must serve on each party to the appeal a copy of the Board's decision and a statement describing the right of any respondent who is penalized to seek judicial review.

(j)(1) The Board's decision under paragraph (i) of this section, including a decision to decline review of the initial decision, becomes the final decision of the Secretary 60 days after the date of service of the Board's decision, except with respect to a decision to remand to the ALJ or if reconsideration is requested under this paragraph.

(2) The Board will reconsider its decision only if it determines that the decision contains a clear error of fact or error of law. New evidence will not be a basis for reconsideration unless the party demonstrates that the evidence is newly discovered and was not previously available.

(3) A party may file a motion for reconsideration with the Board before the date the decision becomes final under paragraph (j)(1) of this section. A motion for reconsideration must be accompanied by a written brief specifying any alleged error of fact or law and, if the party is relying on additional evidence, explaining why the evidence was not previously available. Any party may file a brief in opposition within 15 days of receiving the motion for reconsideration and the accompanying brief unless this time limit is extended by the Board for good cause shown. Reply briefs are not permitted.

(4) The Board must rule on the motion for reconsideration not later than 30 days from the date the opposition brief is due. If the Board denies the motion, the decision issued under paragraph (i) of this section becomes the final decision of the Secretary on the date of service of the ruling. If the Board grants the motion, the Board will issue a reconsidered decision, after such procedures as the Board determines necessary to address the effect of any error. The Board's decision on reconsideration becomes the final decision of the Secretary on the date of service of the decision, except with respect to a decision to remand to the ALJ.

(5) If service of a ruling or decision issued under this section is by mail, the date of service will be deemed to be 5 days from the date of mailing.

(k)(1) A respondent's petition for judicial review must be filed within 60 days of the date on which the decision of the Board becomes the final decision of the Secretary under paragraph (j) of this section.

(2) In compliance with 28 U.S.C. 2112(a), a copy of any petition for judicial review filed in any U.S. Court of Appeals challenging the final decision of the Secretary must be sent by certified mail, return receipt requested, to the General Counsel of HHS. The petition copy must be a copy showing that it has been time-stamped by the clerk of the court when the original was filed with the court.

(3) If the General Counsel of HHS received two or more petitions within 10 days after the final decision of the Secretary, the General Counsel will notify the U.S. Judicial Panel on Multidistrict Litigation of any petitions that were received within the 10 day period.

§ 3.550 Stay of the Secretary's decision.

(a) Pending judicial review, the respondent may file a request for stay of the effective date of any penalty with the ALJ. The request must be accompanied by a copy of the notice of appeal filed with the Federal court. The filing of the request automatically stays the effective date of the penalty until such time as the ALJ rules upon the request.

(b) The ALJ may not grant a respondent's request for stay of any penalty unless the respondent posts a bond or provides other adequate security.

(c) The ALJ must rule upon a respondent's request for stay within 10 days of receipt.

§ 3.552 Harmless error.

No error in either the admission or the exclusion of evidence, and no error or defect in any ruling or order or in

any act done or omitted by the ALJ or by any of the parties is ground for vacating, modifying or otherwise disturbing an otherwise appropriate ruling or order or act, unless refusal to take such action appears to the ALJ or the Board inconsistent with substantial justice. The ALJ and the Board at every stage of the proceeding must disregard any error or defect in the proceeding that does not affect the substantial rights of the parties.

PART 4—NATIONAL LIBRARY OF MEDICINE

Sec.
4.1 Programs to which these regulations apply.
4.2 Definitions.
4.3 Purpose of the Library.
4.4 Use of Library facilities.
4.5 Use of materials from the collections.
4.6 Reference, bibliographic, reproduction, and consultation services.
4.7 Fees.
4.8 Publication of the Library and information about the Library.

AUTHORITY: 42 U.S.C. 216, 286.

SOURCE: 56 FR 29188, June 26, 1991, unless otherwise noted.

§4.1 Programs to which these regulations apply.

(a) The regulations of this part govern access to the National Library of Medicine's facilities and library collections and the availability of its bibliographic, reproduction, reference, and related services. These functions are performed by the Library directly for the benefit of the general public and health-sciences professionals as required by sections 465(b) (3)–(6) of the Act (42 U.S.C. 286(b) (3)–(6)).

(b) The regulations of this part do not apply to:

(1) The Library's internal functions relating to the acquisition and preservation of materials and the organization of these materials as required by sections 465(b) (1) and (2) of the Act (42 U.S.C. 286(b) (1) and (2)).

(2) The availability of ''records'' under the Freedom of Information Act or the Privacy Act of 1974 (5 U.S.C. 552, 552a). These matters are covered in 45 CFR parts 5 and 5b.

(3) Federal assistance for medical libraries and other purposes which are authorized by sections 469–477 of the Act (42 U.S.C. 286b to 286b–8). (See parts 59a, 61 and 64 of this chapter.)

(4) The availability of facilities, collections, and related services of Regional Medical Libraries established or maintained under the authority in section 475 of the Act (42 U.S.C. 286b–6). (See part 59a, subpart B of this chapter.)

§4.2 Definitions.

As used in this part:

Act means the Public Health Service Act, as amended (42 U.S.C. 201 *et seq.*).

Collections means all books, periodicals, prints, audiovisual materials, films, videotapes, recordings, manuscripts, and other resource materials of the library. It does not include data processing tapes or programs used solely for internal processing activities to generate reference materials, nor does it include ''records'' of the Library as defined in 45 CFR 5.5. Records of the Library are available in accordance with the regulations under the Freedom of Information Act and Privacy Act of 1974. (See 45 CFR parts 5 and 5b.)

Director means the Director of the National Library of Medicine or the Director's delegate.

Health-sciences professional means any person engaged in: (1) The administration of health activities; (2) the provision of health services; or (3) research, teaching, or education concerned with the advancement of medicine or other sciences related to health or improvement of the public health.

Historical collection means: (1) Materials in the collections published or printed prior to 1914; (2) manuscripts and prints; (3) the archival film collection; and (4) other materials of the collections which, because of age, or unique or unusual value, require special handling, storage, or protection for their preservation, as determined by the Director.

Library means the National Library of Medicine, established by section 465 of the Act (42 U.S.C. 286).

Regional Medical Library means a medical library established or maintained as a regional medical library under section 475 of the Act (42 U.S.C. 286b–6).

§ 4.3 Purpose of the Library.

The purpose of the Library is to assist the advancement of medical and related sciences and aid the dissemination and exchange of scientific and other information important to the progress of medicine and the public health. The Library acquires and maintains library materials pertinent to medicine, including audiovisual materials; compiles, publishes, and disseminates catalogs, indices, and bibliographies of these materials, as appropriate; makes available materials, through loan or otherwise; provides reference and other assistance to research; and engages in other activities in furtherance of this purpose.

§ 4.4 Use of Library facilities.

(a) *General.* The Library facilities are available to any person seeking to make use of the collections. The Director may prescribe reasonable rules to assure the most effective use of facilities by health-sciences professionals and to protect the collections from misuse or damage. These rules must be consistent with the regulations in this part and applicable Department regulations and policies on nondiscrimination.

(b) *Reading rooms.* Public reading rooms are available for obtaining and reading materials from the collections. The Director may prescribe reasonable rules designed to provide adequate reading space and orderly conditions and procedures.

(c) *Study rooms.* Upon request a limited number of study rooms may be made available to individuals requiring extensive use of Library materials. Requests for study rooms shall be addressed in writing to the Director. The Director shall give priority, in the following order, for study room use to:

(1) Persons engaged in ''special scientific projects'' under section 473 of the Act (42 U.S.C. 286b–4),

(2) Health-sciences professionals, and

(3) The general public.

§ 4.5 Use of materials from the collections.

(a) *Unrestricted materials.* Except as otherwise provided in this section, materials from the collections are generally available to any interested person only in facilities provided by the Library for this purpose. The Director may prescribe additional reasonable rules to assure the most effective use of the Library's resources by health-sciences professionals and to protect the collections from misuse or damage. The rules must be consistent with the regulations in this part and applicable Department regulations and policies on nondiscrimination. Materials in the collections are available upon each request which assures, to the Director's satisfaction, that the materials will be safeguarded from misuse, damage, loss, or misappropriation, and will be returned promptly after use or upon request of the Library.

(b) *Restricted materials*—(1) *Historical collection.* Materials from the historical collection are available only as the Director may permit to assure their maximum preservation and protection. Copies of these materials may be made available in the form of microfilm and other copies, for which reasonable fees may be charged.

(2) *Gifts.* Materials in the collections are available only in accordance with any limitations imposed as a condition of the acquisition of those materials, whether the acquisition was by gift or purchase.

(c) *Loans*—(1) *General.* Requests for loans of materials must assure the Library that (i) the materials will be safeguarded from misuse, damage, loss, or misappropriation and (ii) the materials will be returned promptly after use or upon request of the Library. The Library may provide copies in lieu of original materials, which need not be returned unless otherwise stated at the time of the loan.

(2) *Loans of audiovisual materials.* Audiovisual materials are available for loan under the same general terms as printed materials.

(3) *Loans to other libraries.* Upon request materials or copies are available for use through libraries of public or private agencies or institutions. The requesting library must assure that it has first exhausted its own collection resources, those of other local libraries in the geographic area, and those of the Regional Medical Library network (including Regional and Resource Libraries) before making a request for a loan.

(4) *Loans to health-sciences professionals.* The Director may make loans of materials directly to health-sciences professionals. An individual wishing a loan of library materials must assure to the satisfaction of the Director that the individual is geographically isolated, in terms of distance or available transportation, from medical literature resources likely to contain the desired material.

(Approved by the Office of Management and Budget under control number 0925–0276)

§ 4.6 Reference, bibliographic, reproduction, and consultation services.

(a) *General.* To the extent resources permit, the Library will make available, upon request, reference, bibliographic, reproduction, and consultation services. Priority will be given to requests from health-sciences professionals for services not reasonably available through local or regional libraries.

(b) *Specialized bibliographic services.* The Director may provide bibliographies on individually selected medical or scientific topics upon request where it is consistent with the Library's purpose. The Director may publish and make available for general distribution by the Library, bibliographic searches determined to be of general interest. The Library may also produce and distribute a limited number of bibliographies on topics of general interest to public or nonprofit health-related professional societies, research organizations, and other group users. These bibliographies may be produced on a regularly recurring or intermittent basis under contract between the Library and public or nonprofit agencies, when determined in each case by the Director to be necessary to assure more effective distribution of the bibliographic information.

(c) *Information retrieval system computer tapes.* To the extent Library resources permit and in order to further the Library's purpose, the Director may make available upon request by agencies, organizations, and institutions copies of all or part of the Library's magnetic tapes.

§ 4.7 Fees.

The Director may charge reasonable fees for any service provided by the Library under this part, in accordance with a schedule available at the Library upon request, which are designed to recover all or a portion of the cost to the Library of providing the service.

§ 4.8 Publication of the Library and information about the Library.

Lists of bibliographies, Library publications sold by the Government Printing Office, necessary application forms, and other information concerning the organization, operation, functions, and services of the Library, are available from the National Library of Medicine, Bethesda, Maryland 20894.

PART 5—DESIGNATION OF HEALTH PROFESSIONAL(S) SHORTAGE AREAS

Sec.

5.1 Purpose.
5.2 Definitions.
5.3 Procedures for designation of health professional(s) shortage areas.
5.4 Notification and publication of designations and withdrawals.
APPENDIX A TO PART 5—CRITERIA FOR DESIGNATION OF AREAS HAVING SHORTAGES OF PRIMARY MEDICAL CARE PROFESSIONAL(S)
APPENDIX B TO PART 5—CRITERIA FOR DESIGNATION OF AREAS HAVING SHORTAGES OF DENTAL PROFESSIONAL(S)
APPENDIX C TO PART 5—CRITERIA FOR DESIGNATION OF AREAS HAVING SHORTAGES OF MENTAL HEALTH PROFESSIONALS
APPENDIX D TO PART 5—CRITERIA FOR DESIGNATION OF AREAS HAVING SHORTAGES OF VISION CARE PROFESSIONAL(S)
APPENDIX E TO PART 5—CRITERIA FOR DESIGNATION OF AREAS HAVING SHORTAGES OF PODIATRIC PROFESSIONAL(S)
APPENDIX F TO PART 5—CRITERIA FOR DESIGNATION OF AREAS HAVING SHORTAGES OF PHARMACY PROFESSIONAL(S)
APPENDIX G TO PART 5—CRITERIA FOR DESIGNATION OF AREAS HAVING SHORTAGES OF VETERINARY PROFESSIONAL(S)

AUTHORITY: Sec. 215 of the Public Health Service Act, 58 Stat. 690 (42 U.S.C. 216); sec. 332 of the Public Health Service Act, 90 Stat. 2270–2272 (42 U.S.C. 254e).

SOURCE: 45 FR 76000, Nov. 17, 1980, unless otherwise noted.

§ 5.1 Purpose.

These regulations establish criteria and procedures for the designation of geographic areas, population groups, medical facilities, and other public facilities, in the States, as health professional(s) shortage areas.

§ 5.2 Definitions.

Act means the Public Health Service Act, as amended.

Health professional(s) shortage area means any of the following which the Secretary determines has a shortage of health professional(s): (1) An urban or rural area (which need not conform to the geographic boundaries of a political subdivision and which is a rational area for the delivery of health services); (2) a population group; or (3) a public or nonprofit private medical facility.

Health service area means a health service area whose boundaries have been designated by the Secretary, under section 1511 of the Act, for purposes of health planning activities.

Health systems agency or *HSA* means the health systems agency designated, under section 1515 of the Act, to carry out health planning activities for a specific health service area.

Medical facility means a facility for the delivery of health services and includes: (1) A community health center, public health center, outpatient medical facility, or community mental health center; (2) a hospital, State mental hospital, facility for long-term care, or rehabilitation facility; (3) a migrant health center or an Indian Health service facility; (4) a facility for delivery of health services to inmates in a U.S. penal or correctional institution (under section 323 of the Act) or a State correctional institution; (5) a Public Health Service medical facility (used in connection with the delivery of health services under section 320, 321, 322, 324, 325, or 326 of the Act); or (6) any other Federal medical facility.

Metropolitan area means an area which has been designated by the Office of Management and Budget as a standard metropolitan statistical area (SMSA). All other areas are ''non-metropolitan areas.''

Poverty level means the povery level as defined by the Bureau of the Census, using the poverty index adopted by a Federal Interagency Committee in 1969, and updated each year to reflect changes in the Consumer Price Index.

Secretary means the Secretary of Health and Human Services and any other officer or employee of the Department to whom the authority involved has been delegated.

State includes, in addition to the several States, the District of Columbia, the Commonwealth of Puerto Rico, the Northern Mariana Islands, the Virgin Islands, Guam, American Samoa, and the Trust Territory of the Pacific Islands.

State health planning and development agency or *SHPDA* means a State health planning and development agency designated under section 1521 of the Act.

§ 5.3 Procedures for designation of health professional(s) shortage areas.

(a) Using data available to the Department from national, State, and local sources and based upon the criteria in the appendices to this part, the Department will annually prepare listings (by State and health service area) of currently designated health professional(s) shortage areas and potentially designatable areas, together with appropriate related data available to the Department. Relevant portions of this material will then be forwarded to each health systems agency, State health planning and development agency, and Governor, who will be asked to review the listings for their State, correct any errors of which they are aware, and offer their recommendations, if any, within 90 days, as to which geographic areas, population groups, and facilities in areas under their jurisdiction should be designated. An information copy of these listings will also be made available, upon request, to interested parties for their use in providing comments or recommendations to the Secretary and/or to the appropriate HSA, SHPDA, or Governor.

(b) In addition, any agency or individual may request the Secretary to designate (or withdraw the designation of) a particular geographic area, population group, or facility as a health

professional(s) shortage area. Each request will be forwarded by the Secretary to the appropriate HSA, SHPDA, and Governor, who will be asked to review it and offer their recommendations, if any, within 30 days. An information copy will also be made available to other interested parties, upon request, for their use in providing comments or recommendations to the Secretary and/or to the appropriate HSA, SHPDA, or Governor.

(c) In each case where the designation of a public facility (including a Federal medical facility) is under consideration, the Secretary will give written notice of the proposed designation to the chief administrative officer of the facility, who will be asked to review it and offer their recommendations, if any, within 30 days.

(d) After review of the available information and consideration of the comments and recommendations submitted, the Secretary will designate health professional(s) shortage areas and withdraw the designation of any areas which have been determined no longer to have a shortage of health professional(s).

§ 5.4 Notification and publication of designations and withdrawals.

(a) The Secretary will give written notice of the designation (or withdrawal of designation) of a health professional(s) shortage area, not later than 60 days from the date of the designation (or withdrawal of designation), to:

(1) The Governor of each State in which the area, population group, medical facility, or other public facility so designated is in whole or in part located;

(2) Each HSA for a health service area which includes all or any part of the area, population group, medical facility, or other public facility so designated;

(3) The SHPDA for each State in which the area, population group, medical facility, or other public facility so designated is in whole or in part located; and

(4) Appropriate public or nonprofit private entities which are located in or which have a demonstrated interest in the area so designated.

(b) The Secretary will periodically publish updated lists of designated health professional(s) shortage areas in the FEDERAL REGISTER, by type of professional(s) shortage. An updated list of areas for each type of professional(s) shortage will be published at least once annually.

(c) The effective date of the designation of an area shall be the date of the notification letter to the individual or agency which requested the designation, or the date of publication in the FEDERAL REGISTER, whichever comes first.

(d) Once an area is listed in the FEDERAL REGISTER as a designated health professional(s) shortage area, the effective date of any later withdrawal of the area's designation shall be the date when notification of the withdrawal, or an updated list of designated areas which does not include it, is published in the FEDERAL REGISTER.

APPENDIX A TO PART 5—CRITERIA FOR DESIGNATION OF AREAS HAVING SHORTAGES OF PRIMARY MEDICAL CARE PROFESSIONAL(S)

Part I—Geographic Areas

A. *Federal and State Correctional Institutions.*

1. *Criteria.*

Medium to maximum security Federal and State correctional institutions and youth detention facilities will be designated as having a shortage of primary medical care professional(s) if both the following criteria are met:

(a) The institution has at least 250 inmates.

(b) The ratio of the number of internees per year to the number of FTE primary care physicians serving the institution is at least 1,000:1.

Here the number of internees is defined as follows:

(i) If the number of new inmates per year and the average length-of-stay are not specified, or if the information provided does not indicate that intake medical examinations are routinely performed upon entry, then—Number of internees=average number of inmates.

(ii) If the average length-of-stay is specified as one year or more, and intake medical examinations are routinely performed upon entry, then—Number of internees=average number of inmates+(0.3)×number of new inmates per year.

(iii) If the average length-of-stay is specified as less than one year, and intake examinations are routinely performed upon entry, then—Number of internees=average number of inmates+(0.2)×(1+ALOS/2)×number of new inmates per year where ALOS=average length-of-stay (in fraction of year). (The number of FTE primary care physicians is computed as in part I, section B, paragraph 3 above.)

2. Determination of Degree of Shortage.

Designated correctional institutions will be assigned to degree-of-shortage groups based on the number of inmates and/or the ratio (R) of internees to primary care physicians, as follows:

Group 1—Institutions with 500 or more inmates and no physicians.

Group 2—Other institutions with no physicians and institutions with R greater than (or equal to) 2,000:1.

Group 3—Institutions with R greater than (or equal to) 1,000:1 but less than 2,000:1.

B. *Methodology*.

In determining whether an area meets the criteria established by paragraph A of this part, the following methodology will be used:

1. *Rational Areas for the Delivery of Primary Medical Care Services*.

(a) The following areas will be considered rational areas for the delivery of primary medical care services:

(i) A county, or a group of contiguous counties whose population centers are within 30 minutes travel time of each other.

(ii) A portion of a county, or an area made up of portions of more than one county, whose population, because of topography, market or transportation patterns, distinctive population characteristics or other factors, has limited access to contiguous area resources, as measured generally by a travel time greater than 30 minutes to such resources.

(iii) Established neighborhoods and communities within metropolitan areas which display a strong self-identity (as indicated by a homogeneous socioeconomic or demographic structure and/or a tradition of interaction or interdependency), have limited interaction with contiguous areas, and which, in general, have a minimum population of 20,000.

(b) The following distances will be used as guidelines in determining distances corresponding to 30 minutes travel time:

(i) Under normal conditions with primary roads available: 20 miles.

(ii) In mountainous terrain or in areas with only secondary roads available: 15 miles.

(iii) In flat terrain or in areas connected by interstate highways: 25 miles.

Within inner portions of metropolitan areas, information on the public transportation system will be used to determine the distance corresponding to 30 minutes travel time.

2. *Population Count*.

The population count used will be the total permanent resident civilian population of the area, excluding inmates of institutions, with the following adjustments, where appropriate:

(a) Adjustments to the population for the differing health service requirements of various age-sex population groups will be computed using the table below of visit rates for 12 age-sex population cohorts. The total expected visit rate will first be obtained by multiplying each of the 12 visit rates in the table by the size of the area population within that particular age-sex cohort and adding the resultant 12 visit figures together. This total expected visit rate will then be divided by the U.S. average per capita visit rate of 5.1, to obtain the adjusted population for the area.

Sex	Age groups					
	Under 5	5–14	15–24	25–44	45–64	65 and over
Male	7.3	3.6	3.3	3.6	4.7	6.4
Female ..	6.4	3.2	5.5	6.4	6.5	6.8

(b) The effect of transient populations on the need of an area for primary care professional(s) will be taken into account as follows:

(i) Seasonal residents, *i.e.*, those who maintain a residence in the area but inhabit it for only 2 to 8 months per year, may be included but must be weighted in proportion to the fraction of the year they are present in the area.

(ii) Other tourists (non-resident) may be included in an area's population but only with a weight of 0.25, using the following formula: Effective tourist contribution to population=0.25×(fraction of year tourists are present in area)×(average daily number of tourists during portion of year that tourists are present).

(iii) Migratory workers and their families may be included in an area's population, using the following formula: Effective migrant contribution to population=(fraction of year migrants are present in area)×(average daily number of migrants during portion of year that migrants are present).

3. *Counting of Primary Care Practitioners*.

(a) All non-Federal doctors of medicine (M.D.) and doctors of osteopathy (D.O.) providing direct patient care who practice principally in one of the four primary care specialities—general or family practice, general internal medicine, pediatrics, and obstetrics

and gynecology—will be counted. Those physicians engaged solely in administration, research, and teaching will be excluded. Adjustments for the following factors will be made in computing the number of full-time-equivalent (FTE) primary care physicians:

(i) Interns and residents will be counted as 0.1 full-time equivalent (FTE) physicians.

(ii) Graduates of foreign medical schools who are not citizens or lawful permanent residents of the United States will be excluded from physician counts.

(iii) Those graduates of foreign medical schools who are citizens or lawful permanent residents of the United States, but do not have unrestricted licenses to practice medicine, will be counted as 0.5 FTE physicians.

(b) Practitioners who are semi-retired, who operate a reduced practice due to infirmity or other limiting conditions, or who provide patient care services to the residents of the area only on a part-time basis will be discounted through the use of full-time equivalency figures. A 40-hour work week will be used as the standard for determining full-time equivalents in these cases. For practitioners working less than a 40-hour week, every four (4) hours (or ½ day) spent providing patient care, in either ambulatory or inpatient settings, will be counted as 0.1 FTE (with numbers obtained for FTE's rounded to the nearest 0.1 FTE), and each physician providing patient care 40 or more hours a week will be counted as 1.0 FTE physician. (For cases where data are available only for the number of hours providing patient care in office settings, equivalencies will be provided in guidelines.)

(c) In some cases, physicians located within an area may not be accessible to the population of the area under consideration. Allowances for physicians with restricted practices can be made, on a case-by-case basis. However, where only a portion of the population of the area cannot access existing primary care resources in the area, a population group designation may be more appropriate (see part II of this appendix).

(d) Hospital staff physicians involved exclusively in inpatient care will be excluded. The number of full-time equivalent physicians practicing in organized outpatient departments and primary care clinics will be included, but those in emergency rooms will be excluded.

(e) Physicians who are suspended under provisions of the Medicare-Medicaid Anti-Fraud and Abuse Act for a period of eighteen months or more will be excluded.

4. *Determination of Unusually High Needs for Primary Medical Care Services.*

An area will be considered as having unusually high needs for primary health care services if at least one of the following criteria is met:

(a) The area has more than 100 births per year per 1,000 women aged 15–44.

(b) The area has more than 20 infant deaths per 1,000 live births.

(c) More than 20% of the population (or of all households) have incomes below the poverty level.

5. *Determination of Insufficient Capacity of Existing Primary Care Providers.*

An area's existing primary care providers will be considered to have insufficient capacity if at least two of the following criteria are met:

(a) More than 8,000 office or outpatient visits per year per FTE primary care physician serving the area.

(b) Unusually long waits for appointments for routine medical services (*i.e.*, more than 7 days for established patients and 14 days for new patients).

(c) Excessive average waiting time at primary care providers (longer than one hour where patients have appointments or two hours where patients are treated on a first-come, first-served basis).

(d) Evidence of excessive use of emergency room facilities for routine primary care.

(e) A substantial proportion (2/3 or more) of the area's physicians do not accept new patients.

(f) Abnormally low utilization of health services, as indicated by an average of 2.0 or less office visits per year on the part of the area's population.

6. *Contiguous Area Considerations.*

Primary care professional(s) in areas contiguous to an area being considered for designation will be considered excessively distant, overutilized or inaccessible to the population of the area under consideration if one of the following conditions prevails in each contiguous area:

(a) Primary care professional(s) in the contiguous area are more than 30 minutes travel time from the population center(s) of the area being considered for designation (measured in accordance with paragraph B.1(b) of this part).

(b) The contiguous area population-to-full-time-equivalent primary care physician ratio is in excess of 2000:1, indicating that practitioners in the contiguous area cannot be expected to help alleviate the shortage situation in the area being considered for designation.

(c) Primary care professional(s) in the contiguous area are inaccessible to the population of the area under consideration because of specified access barriers, such as:

(i) Significant differences between the demographic (or socio-economic) characteristics of the area under consideration and those of the contiguous area, indicating that the population of the area under consideration may be effectively isolated from nearby resources. This isolation could be indicated, for example, by an unusually high proportion of non-English-speaking persons.

(ii) A lack of economic access to contiguous area resources, as indicated particularly where a very high proportion of the population of the area under consideration is poor (*i.e.*, where more than 20 percent of the population or the households have incomes below the poverty level), and Medicaid-covered or public primary care services are not available in the contiguous area.

C. *Determination of Degree of Shortage.*

Designated areas will be assigned to degree-of-shortage groups, based on the ratio (R) of population to number of full-time equivalent primary care physicians and the presence or absence of unusually high needs for primary health care services, according to the following table:

	High needs not indicated	High needs indicated
Group 1	No physicians	No physicians; or R≥5,000
Group 2	R≥5,000	5,000>R≥4,000
Group 3	5,000>R≥4,000	4,000>R≥3,500
Group 4	4,000>R≥3,500	3,500>R≥3,000

D. *Determination of size of primary care physician shortage.* Size of Shortage (in number of FTE primary care physicians needed) will be computed using the following formulas:

(1) For areas without unusually high need or insufficient capacity:

Primary care physician shortage=area population/3,500 − number of FTE primary care physicians

(2) For areas with unusually high need or insufficient capacity:

Primary care physician shortage=area population/3,000 − number of FTE primary care physicians

Part II—Population Groups

A. *Criteria.*

1. In general, specific population groups within particular geographic areas will be designated as having a shortage of primary medical care professional(s) if the following three criteria are met:

(a) The area in which they reside is rational for the delivery of primary medical care services, as defined in paragraph B.1 of part I of this appendix.

(b) Access barriers prevent the population group from use of the area's primary medical care providers. Such barriers may be economic, linguistic, cultural, or architectural, or could involve refusal of some providers to accept certain types of patients or to accept Medicaid reimbursement.

(c) The ratio of the number of persons in the population group to the number of primary care physicians practicing in the area and serving the population group is at least 3,000 : 1.

2. Indians and Alaska Natives will be considered for designation as having shortages of primary care professional(s) as follows:

(a) Groups of members of Indian tribes (as defined in section 4(d) of Pub. L. 94–437, the Indian Health Care Improvement Act of 1976) are automatically designated.

(b) Other groups of Indians or Alaska Natives (as defined in section 4(c) of Pub. L. 94–437) will be designated if the general criteria in paragraph A are met.

B. *Determination of Degree of Shortage.*

Each designated population group will be assigned to a degree-of-shortage group, based on the ratio (R) of the group's population to the number of primary care physicians serving it, as follows:

Group 1—No physicians or R>5,000.
Group 2—5,000>R≥4,000.
Group 3—4,000>R≥3,500.
Group 4—3,500>R≥3,000.

Population groups which have received ''automatic'' designation will be assigned to degree-of-shortage group 4 if no information on the ratio of the number of persons in the group to the number of FTE primary care physicians serving them is provided.

C. *Determination of size of primary care physician shortage.* Size of shortage (in number of primary care physicians needed) will be computed as follows:

Primary care physician shortage=number of persons in population group/3,000 − number of FTE primary care physicians

Part III—Facilities

A. *Federal and State Correctional Institutions.*

1. *Criteria.*

Medium to maximum security Federal and State correctional institutions and youth detention facilities will be designated as having a shortage of primary medical care professional(s) if both the following criteria are met:

(a) The institution has at least 250 inmates.

(b) The ratio of the number of internees per year to the number of FTE primary care physicians serving the institution is at least 1,000:1. (Here the number of internees is the number of inmates present at the beginning of the year plus the number of new inmates entering the institution during the year, including those who left before the end of the year; the number of FTE primary care physicians is computed as in part I, section B, paragraph 3 above.)

2. *Determination of Degree of Shortage.*

Designated correctional institutions will be assigned to degree-of-shortage groups based on the number of inmates and/or the ratio (R) of internees to primary care physicians, as follows:

Group 1—Institutions with 500 or more inmates and no physicians.
Group 2—Other institutions with no physicians and institutions with R≥2,000.

Group 3—Institutions with 2,000>R≥1,000.

B. *Public or Non-Profit Medical Facilities.*

1. *Criteria.*

Public or non-profit private medical facilities will be designated as having a shortage of primary medical care professional(s) if:

(a) the facility is providing primary medical care services to an area or population group designated as having a primary care professional(s) shortage; and

(b) the facility has insufficient capacity to meet the primary care needs of that area or population group.

2. *Methodology*

In determining whether public or nonprofit private medical facilities meet the criteria established by paragraph B.1 of this Part, the following methodology will be used:

(a) *Provision of Services to a Designated Area or Population Group.*

A facility will be considered to be providing services to a designated area or population group if either:

(i) A majority of the facility's primary care services are being provided to residents of designated primary care professional(s) shortage areas or to population groups designated as having a shortage of primary care professional(s); or

(ii) The population within a designated primary care shortage area or population group has reasonable access to primary care services provided at the facility. Reasonable access will be assumed if the area within which the population resides lies within 30 minutes travel time of the facility and non-physical barriers (relating to demographic and socioeconomic characteristics of the population) do not prevent the population from receiving care at the facility.

Migrant health centers (as defined in section 319(a)(1) of the Act) which are located in areas with designated migrant population groups and Indian Health Service facilities are assumed to be meeting this requirement.

(b) *Insufficient capacity to meet primary care needs.*

A facility will be considered to have insufficient capacity to meet the primary care needs of the area or population it serves if at least two of the following conditions exist at the facility:

(i) There are more than 8,000 outpatient visits per year per FTE primary care physician on the staff of the facility. (Here the number of FTE primary care physicians is computed as in Part I, Section B, paragraph 3 above.)

(ii) There is excessive usage of emergency room facilities for routine primary care.

(iii) Waiting time for appointments is more than 7 days for established patients or more than 14 days for new patients, for routine health services.

(iv) Waiting time at the facility is longer than 1 hour where patients have appointments or 2 hours where patients are treated on a first-come, first-served basis.

3. *Determination of Degree of Shortage.*

Each designated medical facility will be assigned to the same degree-of-shortage group as the designated area or population group which it serves.

[45 FR 76000, Nov. 17, 1980, as amended at 54 FR 8737, Mar. 2, 1989; 57 FR 2480, Jan. 22, 1992]

APPENDIX B TO PART 5—CRITERIA FOR DESIGNATION OF AREAS HAVING SHORTAGES OF DENTAL PROFESSIONAL(S)

Part I—Geographic Areas

A. *Federal and State Correctional Institutions.*

1. *Criteria*

Medium to maximum security Federal and State correctional institutions and youth detention facilities will be designated as having a shortage of dental professional(s) if both the following criteria are met:

(a) The institution has at least 250 inmates.

(b) The ratio of the number of internees per year to the number of FTE dentists serving the institution is at least 1,500:1.

Here the number of internees is defined as follows:

(i) If the number of new inmates per year and the average length-of-stay are not specified, or if the information provided does not indicate that intake dental examinations are routinely performed by dentists upon entry, then—Number of internees=average number of inmates.

(ii) If the average length-of-stay is specified as one year or more, and intake dental examinations are routinely performed upon entry, then—Number of internees=average number of inmates+number of new inmates per year.

(iii) If the average length-of-stay is specified as less than one year, and intake dental examinations are routinely performed upon entry, then—Number of internees=average number of inmates+⅓×(1+2×ALOS)×number of new inmates per year where ALOS=average length-of-stay (in fraction of year).

(The number of FTE dentists is computed as in part I, section B, paragraph 3 above.)

2. Determination of Degree of Shortage.

Designated correctional institutions will be assigned to degree-of-shortage groups based on the number of inmates and/or the ratio (R) of internees to dentists, as follows:

Group 1—Institutions with 500 or more inmates and no dentists.

Group 2—Other institutions with no dentists and institutions with R greater than (or equal to) 3,000:1.

Group 3—Institutions with R greater than (or equal to) 1,500:1 but less than 3,000:1.

B. *Methodology*.

In determining whether an area meets the criteria established by paragraph A of this part, the following methodology will be used:

1. *Rational Area for the Delivery of Dental Services*.

(a) The following areas will be considered rational areas for the delivery of dental health services:

(i) A county, or a group of several contiguous counties whose population centers are within 40 minutes travel time of each other.

(ii) A portion of a county (or an area made up of portions of more than one county) whose population, because of topography, market or transportation patterns, distinctive population characteristics, or other factors, has limited access to contiguous area resources, as measured generally by a travel time of greater than 40 minutes to such resources.

(iii) Established neighborhoods and communities within metropolitan areas which display a strong self-identity (as indicated by a homogenous socioeconomic or demographic structure and/or a traditional of interaction or intradependency), have limited interaction with contiguous areas, and which, in general, have a minimum population of 20,000.

(b) The following distances will be used as guidelines in determining distances corresponding to 40 minutes travel time:

(i) Under normal conditions with primary roads available: 25 miles.

(ii) In mountainous terrain or in areas with only secondary roads available: 20 miles.

(iii) In flat terrain or in areas connected by interstate highways: 30 miles.

Within inner portions of metropolitan areas, information on the public transportation system will be used to determine the distance corresponding to 40 minutes travel time.

2. *Population Count*.

The population count use will be the total permanent resident civilian population of the area, excluding inmates of institutions, with the following adjustments:

(a) Seasonal residents, *i.e.*, those who maintain a residence in the area but inhabit it for only 2 to 8 months per year, may be included but must be weighted in proportion to the fraction of the year they are present in the area.

(b) Migratory workers and their families may be included in an area's population using the following formula: Effective migrant contribution to population=(fraction of year migrants are present in area)×(average daily number of migrants during portion of year that migrants are present).

3. *Counting of Dental Practitioners*.

(a) All non-Federal dentists providing patient care will be counted, except in those areas where it is shown that specialists (those dentists not in general practice or pedodontics) are serving a larger area and are not addressing the general dental care needs of the area under consideration.

(b) Full-time equivalent (FTE) figures will be used to reflect productivity differences among dental practices based on the age of the dentists, the number of auxiliaries employed, and the number of hours worked per week. In general, the number of FTE dentists will be computed using weights obtained from the matrix in Table 1, which is based on the productivity of dentists at various ages, with different numbers of auxiliaries, as compared with the average productivity of all dentists. For the purposes of these determinations, an auxiliary is defined as any non-dentist staff employed by the dentist to assist in operation of the practice.

TABLE 1—EQUIVALENCY WEIGHTS, BY AGE AND NUMBER OF AUXILIARIES

	<55	55–59	60–64	65+
No auxiliaries	0.8	0.7	0.6	0.5
One auxiliary	1.0	0.9	0.8	0.7
Two auxiliaries	1.2	1.0	1.0	0.8
Three auxiliaries	1.4	1.2	1.0	1.0
Four or more auxiliaries	1.5	1.5	1.3	1.2

If information on the number of auxiliaries employed by the dentist is not available, Table 2 will be used to compute the number of full-time equivalent dentists.

TABLE 2—EQUIVALENCY WEIGHTS, BY AGE

	55	55–59	60–64	65+
Equivalency weights	1.2	0.9	0.8	0.6

The number of FTE dentists within a particular age group (or age/auxiliary group) will be obtained by multiplying the number of dentists within that group by its corresponding equivalency weight. The total supply of FTE dentists within an area is then computed as the sum of those dentists within each age (or age/auxiliary) group.

(c) The equivalency weights specified in tables 1 and 2 assume that dentists within a particular group are working full-time (40 hours per week). Where appropriate data are available, adjusted equivalency figures for dentists who are semi-retired, who operate a reduced practice due to infirmity or other limiting conditions, or who are available to the population of an area only on a part-time basis will be used to reflect the reduced availability of these dentists. In computing these equivalency figures, every 4 hours (or ½ day) spent in the dental practice will be counted as 0.1 FTE except that each dentist working more than 40 hours a week will be

counted as 1.0. The count obtained for a particular age group of dentists will then be multiplied by the appropriate equivalency weight from table 1 or 2 to obtain a full-time equivalent figure for dentists within that particular age or age/auxiliary category.

4. *Determination of Unusually High Needs for Dental Services.*

An area will be considered as having unusually high needs for dental services if at least one of the following criteria is met:

(a) More than 20% of the population (or of all households) has incomes below the poverty level.

(b) The majority of the area's population does not have a fluoridated water supply.

5. *Determination of Insufficient Capacity of Existing Dental Care Providers.*

An area's existing dental care providers will be considered to have insufficient capacity if at least two of the following criteria are met:

(a) More than 5,000 visits per year per FTE dentist serving the area.

(b) Unusually long waits for appointments for routine dental services (*i.e.*, more than 6 weeks).

(c) A substantial proportion (⅔ or more) of the area's dentists do not accept new patients.

6. *Contiguous Area Considerations.*

Dental professional(s) in areas contiguous to an area being considered for designation will be considered excessively distant, overutilized or inaccessible to the population of the area under consideration if one of the following conditions prevails in each contiguous area:

(a) Dental professional(s) in the contiguous area are more than 40 minutes travel time from the center of the area being considered for designation (measured in accordance with Paragraph B.1.(b) of this part).

(b) Contiguous area population-to-(FTE) dentist ratios are in excess of 3,000:1, indicating that resources in contiguous areas cannot be expected to help alleviate the shortage situation in the area being considered for designation.

(c) Dental professional(s) in the contiguous area are inaccessible to the population of the area under consideration because of specified access barriers, such as:

(i) Significant differences between the demographic (or socioeconomic) characteristics of the area under consideration and those of the contiguous area, indicating that the population of the area under consideration may be effectively isolated from nearby resources. Such isolation could be indicated, for example, by an unusually high proportion of non-English-speaking persons.

(ii) A lack of economic access to contiguous area resources, particularly where a very high proportion of the population of the area under consideration is poor (i.e., where more than 20 percent of the population or of the households have incomes below the poverty level) and Medicaid-covered or public dental services are not available in the contiguous area.

C. *Determination of Degree of Shortage.*

The degree of shortage of a given geographic area, designated as having a shortage of dental professional(s), will be determined using the following procedure:

Designated areas will be assigned to degree-of-shortage groups, based on the ratio (R) of population to number of full-time-equivalent dentists and the presence or absence of unusually high needs for dental services, or insufficient capacity of existing dental care providers according to the following table:

	High needs or insufficient capacity not indicated	High needs or insufficient capacity indicated
Group 1	No dentists	No dentists or R≥8,000.
Group 2	R≥8,000	8,000>R≥6,000.
Group 3	8,000>R≥6,000	6,000>R≥5,000.
Group 4	6,000>R≥5,000	5,000>R≥4,000.

D. *Determination of size of dental shortage.* Size of Dental Shortage (in number of FTE dental practitioners needed) will be computed using the following formulas:

(1) For areas without unusually high need: Dental shortage=area population/5,000 – number of FTE dental practitioners

(2) For areas with unusually high need: Dental shortage=area population/4,000 – number of FTE dental practitioners

Part II—Population Groups

A. *Criteria.*

1. In general, specified population groups within particular geographic areas will be designated as having a shortage of dental care professional(s) if the following three criteria are met:

a. The area in which they reside is rational for the delivery of dental care services, as defined in paragraph B.1 of part I of this appendix.

b. Access barriers prevent the population group from use of the area's dental providers.

c. The ratio (R) of the number of persons in the population group to the number of dentists practicing in the area and serving the population group is at least 4,000:1.

2. Indians and Alaska Natives will be considered for designation as having shortages of dental professional(s) as follows:

(a) Groups of members of Indian tribes (as defined in section 4(d) of Pub. L. 94–437, the Indian Health Care Improvement Act of 1976) are automatically designated.

(b) Other groups of Indians or Alaska Natives (as defined in section 4(c) of Pub. L. 94–437) will be designated if the general criteria in paragraph 1 are met.

B. *Determination of Degree of Shortage.*

Each designated population group will be assigned to a degree-of-shortage group as follows:

Group 1—No dentists or R≥8,000.
Group 2—8,000>R≥6,000.
Group 3—6,000>R≥5,000.
Group 4—5,000>R≥4,000.

Population groups which have received ''automatic'' designation will be assigned to degree-of-shortage group 4 unless information on the ratio of the number of persons in the group to the number of FTE dentists serving them is provided.

C. *Determination of size of dental shortage.* Size of dental shortage will be computed as follows:

Dental shortage=number of persons in population group/4,000 − number of FTE dental practitioners

Part III—Facilities

A. *Federal and State Correctional Institutions.*

1. *Criteria.*

Medium to maximum security Federal and State correctional institutions and youth detention facilities will be designated as having a shortage of dental professional(s) if both the following criteria are met:

(a) The institution has at least 250 inmates.

(b) The ratio of the number of internees per year to the number of FTE dentists serving the institution is at least 1,500:1. (Here the number of internees is the number of inmates present at the beginning of the year plus the number of new inmates entering the institution during the year, including those who left before the end of the year; the number of FTE dentists is computed as in part I, section B, paragraph 3 above.)

2. *Determination of Degree-of-Shortage.*

Designated correctional institutions will be assigned to degree-of-shortage groups as follows, based on number of inmates and/or the ratio (R) of internees to dentists:

Group 1—Institutions with 500 or more inmates and no dentists.
Group 2—Other institutions with no dentists and institutions with R > 3,000.
Group 3—Institutions with 3,000 > R > 1,500.

B. *Public or Non-Profit Private Dental Facilities.*

1. *Criteria.*

Public or nonprofit private facilties providing general dental care services will be designated as having a shortage of dental professional(s) if both of the following criteria are met:

(a) The facility is providing general dental care services to an area or population group designated as having a dental professional(s) shortage; and

(b) The facility has insufficent capacity to meet the dental care needs of that area or population group.

2. *Methodology.*

In determining whether public or nonprofit private facilities meet the criteria established by paragraph B.1. of this part, the following methodology will be used:

(a) *Provision of Services to a Designated Area or Population Group.*

A facility will be considered to be providing services to an area or population group if either:

(i) A majority of the facility's dental care services are being provided to residents of designated dental professional(s) shortage areas or to population groups designated as having a shortage of dental professional(s); or

(ii) The population within a designated dental shortage area or population group has reasonable access to dental services provided at the facility. Reasonable access will be assumed if the population lies within 40 minutes travel time of the facility and non-physical barriers (relating to demographic and socioeconomic characteristics of the population) do not prevent the population from receiving care at the facility.

Migrant health centers (as defined in section 319(a)(1) of the Act) which are located in areas with designated migrant population groups and Indian Health Service facilities are assumed to be meeting this requirement.

(b) *Insufficient Capacity To Meet Dental Care Needs.*

A facility will be considered to have insufficient capacity to meet the dental care needs of a designated area or population group if either of the following conditions exists at the facility.

(i) There are more than 5,000 outpatient visits per year per FTE dentist on the staff of the facility. (Here the number of FTE dentists is computed as in part I, section B, paragraph 3 above.)

(ii) Waiting time for appointments is more than 6 weeks for routine dental services.

3. *Determination of Degree of Shortage.*

Each designated dental facility will be assigned to the same degree-of-shortage group as the designated area or population group which it serves.

[45 FR 76000, Nov. 17, 1980, as amended at 54 FR 8738, Mar. 2, 1989; 57 FR 2480, Jan. 22, 1992]

APPENDIX C TO PART 5—CRITERIA FOR DESIGNATION OF AREAS HAVING SHORTAGES OF MENTAL HEALTH PROFESSIONALS

Part I—Geographic Areas

A. *Criteria.* A geographic area will be designated as having a shortage of mental health professionals if the following four criteria are met:

1. The area is a rational area for the delivery of mental health services.

2. One of the following conditions prevails within the area:

(a) The area has—

(i) A population-to-core-mental-health-professional ratio greater than or equal to 6,000:1 and a population-to-psychiatrist ratio greater than or equal to 20,000:1, or

(ii) A population-to-core-professional ratio greater than or equal to 9,000:1, or

(iii) A population-to-psychiatrist ratio greater than or equal to 30,000:1;

(b) The area has unusually high needs for mental health services, and has—

(i) A population-to-core-mental-health-professional ratio greater than or equal to 4,500:1 and

A population-to-psychiatrist ratio greater than or equal to 15,000:1, or

(ii) A population-to-core-professional ratio greater than or equal to 6,000:1, or

(iii) A population-to-psychiatrist ratio greater than or equal to 20,000:1;

3. Mental health professionals in contiguous areas are overutilized, excessively distant or inaccessible to residents of the area under consideration.

B. *Methodology*.

In determining whether an area meets the criteria established by paragraph A of this part, the following methodology will be used:

1. *Rational Areas for the Delivery of Mental Health Services*.

(a) The following areas will be considered rational areas for the delivery of mental health services:

(i) An established mental health catchment area, as designated in the State Mental Health Plan under the general criteria set forth in section 238 of the Community Mental Health Centers Act.

(ii) A portion of an established mental health catchment area whose population, because of topography, market and/or transportation patterns or other factors, has limited access to mental health resources in the rest of the catchment area, as measured generally by a travel time of greater than 40 minutes to these resources.

(iii) A county or metropolitan area which contains more than one mental health catchment area, where data are unavailable by individual catchment area.

(b) The following distances will be used as guidelines in determining distances corresponding to 40 minutes travel time:

(i) Under normal conditions with primary roads available: 25 miles.

(ii) In mountainous terrain or in areas with only secondary roads available: 20 miles.

(iii) In flat terrain or in areas connected by interstate highways: 30 miles.

Within inner portions of metropolitan areas, information on the public transportation system will be used to determine the distance corresponding to 40 minutes travel time.

2. *Population Count*.

The population count used will be the total permanent resident civilian population of the area, excluding inmates of institutions.

3. *Counting of mental health professionals*. (a) All non-Federal core mental health professionals (as defined below) providing mental health patient care (direct or other, including consultation and supervision) in ambulatory or other short-term care settings to residents of the area will be counted. Data on each type of core professional should be presented separately, in terms of the number of full-time-equivalent (FTE) practitioners of each type represented.

(b) Definitions:

(i) *Core mental health professionals* or *core professionals* includes those psychiatrists, clinical psychologists, clinical social workers, psychiatric nurse specialists, and marriage and family therapists who meet the definitions below.

(ii) *Psychiatrist* means a doctor of medicine (M.D.) or doctor of osteopathy (D.O.) who

(A) Is certified as a psychiatrist or child psychiatrist by the American Medical Specialities Board of Psychiatry and Neurology or by the American Osteopathic Board of Neurology and Psychiatry, or, if not certified, is ''broad-eligible'' (i.e., has successfully completed an accredited program of graduate medical or osteopathic education in psychiatry or child psychiatry); and

(B) Practices patient care psychiatry or child psychiatry, and is licensed to do so, if required by the State of practice.

(iii) *Clinical psychologist* means an individual (normally with a doctorate in psychology) who is practicing as a clinical or counseling psychologist and is licensed or certified to do so by the State of practice; or, if licensure or certification is not required in the State of practice, an individual with a doctorate in psychology and two years of supervised clinical or counseling experience. (School psychologists are not included.)

(iv) *Clinical social worker* means an individual who—

(A) Is certified as a clinical social worker by the American Board of Examiners in Clinical Social Work, or is listed on the National Association of Social Workers' Clinical Register, or has a master's degree in social work and two years of supervised clinical experience; and

(B) Is licensed to practice as a social worker, if required by the State of practice.

(v) *Psychiatric nurse specialist* means a registered nurse (R.N.) who—

(A) Is certified by the American Nurses Association as a psychiatric and mental health clinical nurse specialist, or has a master's degree in nursing with a specialization in psychiatric/mental health and two years of supervised clinical experience; and

(B) Is licensed to practice as a psychiatric or mental health nurse specialist, if required by the State of practice.

(vi) *Marriage and family therapist* means an individual (normally with a master's or doctoral degree in marital and family therapy and at least two years of supervised clinical experience) who is practicing as a marital and family therapist and is licensed or certified to do so by the State of practice; or, if licensure or certification is not required by the State of practice, is eligible for clinical membership in the American Association for Marriage and Family Therapy.

(c) Practitioners who provide patient care to the population of an area only on a part-time basis (whether because they maintain another office elsewhere, spend some of their time providing services in a facility, are semi-retired, or operate a reduced practice for other reasons), will be counted on a partial basis through the use of full-time-equivalency calculations based on a 40-hour week. Every 4 hours (or ½ day) spent providing patient care services in ambulatory or inpatient settings will be counted as 0.1 FTE, and each practitioner providing patient care for 40 or more hours per week as 1.0 FTE. Hours spent on research, teaching, vocational or educational counseling, and social services unrelated to mental health will be excluded; if a practitioner is located wholly or partially outside the service area, only those services actually provided within the area are to be counted.

(d) In some cases, practitioners located within an area may not be accessible to the general population of the area under consideration. Practitioners working in restricted facilities will be included on an FTE basis based on time spent outside the facility. Examples of restricted facilities include correctional institutions, youth detention facilities, residential treatment centers for emotionally disturbed or mentally retarded children, school systems, and inpatient units of State or county mental hospitals.

(e) In cases where there are mental health facilities or institutions providing both inpatient and outpatient services, only those FTEs providing mental health services in outpatient units or other short-term care units will be counted.

(f) Adjustments for the following factors will also be made in computing the number of FTE providers:

(i) Practitioners in residency programs will be counted as 0.5 FTE.

(ii) Graduates of foreign schools who are not citizens or lawful permanent residents of the United States will be excluded from counts.

(iii) Those graduates of foreign schools who are citizens or lawful permanent residents of the United States, and practice in certain settings, but do not have unrestricted licenses to practice, will be counted on a full-time-equivalency basis up to a maximum of 0.5 FTE.

(g) Practitioners suspended for a period of 18 months or more under provisions of the Medicare-Medicaid Anti-Fraud and Abuse Act will not be counted.

4. *Determination of unusually high needs for mental health services.* An area will be considered to have unusually high needs for mental health services if one of the following criteria is met:

(a) 20 percent of the population (or of all households) in the area have incomes below the poverty level.

(b) The youth ratio, defined as the ratio of the number of children under 18 to the number of adults of ages 18 to 64, exceeds 0.6.

(c) The elderly ratio, defined as the ratio of the number of persons aged 65 and over to the number of adults of ages 18 to 64, exceeds 0.25.

(d) A high prevalence of alcoholism in the population, as indicated by prevalence data showing the area's alcoholism rates to be in the worst quartile of the nation, region, or State.

(e) A high degree of substance abuse in the area, as indicated by prevalence data showing the area's substance abuse to be in the worst quartile of the nation, region, or State.

5. *Contiguous area considerations.* Mental health professionals in areas contiguous to an area being considered for designation will be considered excessively distant, overutilized or inaccessible to the population of the area under consideration if one of the following conditions prevails in each contiguous area:

(a) Core mental health professionals in the contiguous area are more than 40 minutes travel time from the closest population center of the area being considered for designation (measured in accordance with paragraph B.1(b) of this part).

(b) The population-to-core-mental-health-professional ratio in the contiguous area is in excess of 3,000:1 and the population-to-psychiatrist ratio there is in excess of 10,000:1, indicating that core mental health professionals in the contiguous areas are overutilized and cannot be expected to help alleviate the shortage situation in the area for which designation is being considered. (If data on core mental health professionals other than psychiatrists are not available for the contiguous area, a population-to-psychiatrist ratio there in excess of 20,000:1 may be used to demonstrate overutilization.)

(c) Mental health professionals in contiguous areas are inaccessible to the population of the requested area due to geographic, cultural, language or other barriers or because of residency restrictions of programs or facilities providing such professionals.

C. *Determination of degree of shortage.* Designated areas will be assigned to degree-of-

shortage groups according to the following table, depending on the ratio (R_C) of population to number of FTE core-mental-health-service providers (FTE_C); the ratio (R_P) of population to number of FTE psychiatrists (FTE_P); and the presence or absence of high needs:

High Needs Not Indicated

Group 1—FTE_C=0 and FTE_P=0
Group 2—R_C gte * 6,000:1 and FTE_P=0
Group 3—R_C gte 6,000:1 and R_P gte 20,000
Group 4(a)—For psychiatrist placements only: All other areas with FTE_P=0 or R_P gte 30,000
Group 4(b)—For other mental health practitioner placements: All other areas with R_C gte 9,000:1.

* Note: ''gte'' means ''greater than or equal to''.

High Needs Indicated

Group 1—FTE_C=0 and FTE_P=0
Group 2—R_C gte 4,500:1 and FTE_P=0
Group 3—R_C gte 4,500:1 and R_P gte 15,000
Group 4(a)—For psychiatrist placements only: All other areas with FTE_P=0 or R_P gte 20,000
Group 4(b)—For other mental health practitioner placements: All other areas with R_C gte 6,000:1.

D. *Determination of Size of Shortage*. Size of Shortage (in number of FTE professionals needed) will be computed using the following formulas:

(1) For areas without unusually high need:

Core professional shortage=area population/6,000 − number of FTE core professionals
Psychiatrist shortage=area population/20,000 − number of FTE psychiatrists

(2) For areas with unusually high need:

Core professional shortage=area population/4,500 − number of FTE core professionals
Psychiatrist shortage=area population/15,000 − number of FTE psychiatrists

Part II—Population Groups

A. *Criteria*. Population groups within particular rational mental health service areas will be designated as having a mental health professional shortage if the following criteria are met:

1. Access barriers prevent the population group from using those core mental health professionals which are present in the area; and

2. One of the following conditions prevails:

(a) The ratio of the number of persons in the population group to the number of FTE core mental health professionals serving the population group is greater than or equal to 4,500:1 and the ratio of the number of persons in the population group to the number of FTE psychiatrists serving the population group is greater than or equal to 15,000:1; or,

(b) The ratio of the number of persons in the population group to the number of FTE core mental health professionals serving the population group is greater than or equal to 6,000:1; or,

(c) The ratio of the number of persons in the population group to the number of FTE psychiatrists serving the population group is greater than or equal to 20,000:1.

B. *Determination of degree of shortage*. Designated population groups will be assigned to the same degree-of-shortage groups defined in part I.C of this appendix for areas with unusually high needs for mental health services, using the computed ratio (R_C) of the number of persons in the population group to the number of FTE core mental health service providers (FTE_C) serving the population group, and the ration (R_P) of the number of persons in the population group to the number of FTE psychiatrists (FTE_P) serving the population group.

C. *Determination of size of shortage*. Size of shortage will be computed as follows:

Core professional shortage=number of persons in population group/4,500 − number of FTE core professionals
Psychiatrist shortage=number of persons in population group/15,000 − number of FTE psychiatrists

Part III—Facilities

A. *Federal and State Correctional Institutions*

1. *Criteria*.

Medium to maximum security Federal and State correctional institutions for adults or youth, and youth detention facilities, will be designated as having a shortage of psychiatric professional(s) if both of the following criteria are met:

(a) The institution has more than 250 inmates, and

(b) The ratio of the number of internees per year to the number of FTE psychiatrists serving the institution is at least 2,000:1. (Here the number of internees is the number of inmates or residents present at the beginning of the year, plus the number of new inmates or residents entering the institution during the year, including those who left before the end of the year; the number of FTE psychiatrists is computed as in part I, section B, paragraph 3 above.)

2. *Determination of Degree of Shortage*.

Correctional facilities and youth detention facilities will be assigned to degree-of-shortage groups, based on the number of inmates and/or the ratio (R) of internees to FTE psychiatrists, as follows:

Group 1—Facilities with 500 or more inmates or residents and no psychiatrist.

Group 2—Other facilities with no psychiatrists and facilities with 500 or more inmates or residents and R>3,000.

Group 3—All other facilities.

B. *State and County Mental Hospitals*.

1. *Criteria.*

A State or county hospital will be designated as having a shortage of psychiatric professional(s) if both of the following criteria are met:

(a) The mental hospital has an average daily inpatient census of at least 100; and

(b) The number of workload units per FTE psychiatrists available at the hospital exceeds 300, where workload units are calculated using the following formula:

Total workload units = average daily inpatient census + 2 × (number of inpatient admissions per year) + 0.5 × (number of admissions to day care and outpatient services per year).

2. *Determination of Degree of Shortage.*

State or county mental hospitals will be assigned to degree-of-shortage groups, based on the ratio (R) of workload units to number of FTE psychiatrists, as follows:

Group 1—No psychiatrists, or R>1,800.

Group 2—1,800>R>1,200.

Group 3—1,200>R>600.

Group 4—600>R>300.

C. *Community Mental Health Centers and Other Public or Nonprofit Private Facilities.*

1. *Criteria.*

A community mental health center (CMHC), authorized by Pub. L. 94–63, or other public or nonprofit private facility providing mental health services to an area or population group, may be designated as having a shortage of psychiatric professional(s) if the facility is providing (or is responsible for providing) mental health services to an area or population group designated as having a mental health professional(s), and the facility has insufficient capacity to meet the psychiatric needs of the area or population group.

2. *Methodology.*

In determining whether CMHCs or other public or nonprofit private facilities meet the criteria established in paragraph C.1 of this Part, the following methodology will be used.

(a) *Provision of Services to a Designated Area or Population Group.*

The facility will be considered to be providing services to a designated area or population group if either:

(i) A majority of the facility's mental health services are being provided to residents of designated mental health professional(s) shortage areas or to population groups designated as having a shortage of mental health professional(s); or

(ii) The population within a designated psychiatric shortage area or population group has reasonable access to mental health services provided at the facility. Such reasonable access will be assumed if the population lies within 40 minutes travel time of the facility and nonphysical barriers (relating to demographic and socioeconomic characteristics of the population) do not prevent the population from receiving care at the facility.

(b) *Responsibility for Provision of Services.*

This condition will be considered to be met if the facility, by Federal or State statute, administrative action, or contractual agreement, has been given responsibility for providing and/or coordinating mental health services for the area or population group, consistent with applicable State plans.

(c) *Insufficient capacity to meet mental health service needs.* A facility will be considered to have insufficient capacity to meet the mental health service needs of the area or population it serves if:

(i) There are more than 1,000 patient visits per year per FTE core mental health professional on staff of the facility, or

(ii) There are more than 3,000 patient visits per year per FTE psychiatrist on staff of the facility, or

(iii) No psychiatrists are on the staff and this facility is the only facility providing (or responsible for providing) mental health services to the designated area or population.

3. *Determination of Degree-of-Shortage.*

Each designated facility will be assigned to the same degree-of-shortage group as the designated area or population group which it serves.

[45 FR 76000, Nov. 17, 1980, as amended at 54 FR 8738, Mar. 2, 1989; 57 FR 2477, Jan. 22, 1992]

APPENDIX D TO PART 5—CRITERIA FOR DESIGNATION OF AREAS HAVING SHORTAGES OF VISION CARE PROFESSIONAL(S)

Part I—Geographic Areas

A. *Criteria.*

A geographic area will be designated as having a shortage of vision care professional(s) if the following three criteria are met:

1. The area is a rational area for the delivery of vision care services.

2. The estimated number of optometric visits supplied by vision care professional(s) in the area is less than the estimated requirements of the area's population for these visits, and the computed shortage is at least 1,500 optometric visits.

3. Vision care professional(s) in contiguous areas are excessively distant, overutilized, or inaccessible to the population of the area under consideration.

B. *Methodology.*

In determining whether an area meets the criteria established by paragraph A of this part, the following methodology will be used:

1. *Rational Areas for the Delivery of Vision Care Services.*

(a) The following areas will be considered rational areas for the delivery of vision care services:

(i) A county, or a group of contiguous counties whose population centers are within 40 minutes travel time of each other;

(ii) A portion of a county (or an area made up of portions of more than one county) whose population, because of topography, market or transportation patterns, or other factors, has limited access to contiguous area resources, as measured generally by a travel time of greater than 40 minutes to these resources.

(b) The following distances will be used as guidelines in determining distances corresponding to 40 minutes travel time:

(i) Under normal conditions with primary roads available: 25 miles.

(ii) In mountainous terrain or in areas with only secondary roads available: 20 miles.

(iii) In flat terrain or in areas connected by interstate highways: 30 miles.

Within inner portions of metropolitan areas, information on the public transportation system will be used to determine the distance corresponding to 40 minutes travel time.

2. *Determination of Estimated Requirement for Optometric Visits.*

The number of optometric visits required by an area's population will be estimated by multiplying each of the following visit rates by the size of the population within that particular age group and then adding the figures obtained together.

Age	Annual number of optometric visits required per person, by age					
	Under 20	20–29	30–39	40–49	50–59	60 and over
Number of visits	0.11	0.20	0.24	0.35	0.41	0.48

For geographic areas where the age distribution of the population is not known, it will be assumed that the percentage distribution, by age groups, for the area is the same as the distribution for the county of which it is a part.

(3) *Determination of Estimated Supply of Optometric Visits.*

The estimated supply of optometric services will be determined by use of the following formula:

Optometric visits supplied = 3,000 × (number of optometrists under 65)
Optometric visits supplied + 2,000 × (number of optometrists 65 and over)
Optometric visits supplied + 1,500 × (number of ophthamologists)

(4) *Determination of Size of Shortage.*

Size of shortage (in number of optometric visits) will be computed as follows:

Optometric visit shortage = visits required − visits supplied

(5) *Contiguous Area Considerations.*

Vision care professional(s) in area contiguous to an area being considered for designation will be considered execessively distant, overutilized or inaccessible to the population of the area if one of the following conditions prevails in each contiguous area:

(a) Vision care professional(s) in the contiguous area are more than 40 minutes travel time from the center of the area being considered for designation (measured in accordance with paragraph B.1(b) of this part).

(b) The estimated requirement for vision care services in the contiguous area exceeds the estimated supply of such services there, based on the requirements and supply calculations previously described.

(c) Vision care professional(s) in the contiguous area are inaccessible to the population of the area because of specified access barriers (such as economic or cultural barriers).

C. *Determination of Degree-of-Shortage.*

Designated areas (and population groups) will be assigned to degree-of-shortage groups, based on the ratio of optometric visits supplied to optometric visits required for the area (or group), as follows:

Group 1—Areas (or groups) with no optometric visits being supplied (i.e., with no optometrists or ophthalmologists).

Group 2—Areas (or groups) where the ratio of optometric visits supplied to optometric visits required is less than 0.5.

Group 3—Areas (or groups) where the ratio of optometric visits supplied to optometric visits required is between 0.5 and 1.0.

Part II—Population Groups

A. *Criteria.*

Population groups within particular geographic areas will be designated if both the following criteria are met:

(1) Members of the population group do not have access to vision care resources within the area (or in contiguous areas) because of non-physical access barriers (such as economic or cultural barriers).

(2) The estimated number of optometric visits supplied to the population group (as determined under paragraph B.3 of part I of this Appendix) is less than the estimated number of visits required by that group (as determined under paragraph B.2 of part I of this Appendix), and the computed shortage is at least 1,500 optometric visits.

B. *Determination of Degree of Shortage.*

The degree of shortage of a given population group will be determined in the same way as described for areas in paragraph C of part I of this appendix.

APPENDIX E TO PART 5—CRITERIA FOR DESIGNATION OF AREAS HAVING SHORTAGES OF PODIATRIC PROFESSIONAL(S)

Part I—Geographic Areas

A. *Criteria.*

A geographic area will be designated as having a shortage of podiatric professional(s) if the following three criteria are met:

1. The area is a rational area for the delivery of podiatric services.

2. The area's ratio of population to foot care practitioners is at least 28,000:1, and the computed podiatrist shortage to meet this ratio is at least 0.5.

3. Podiatric professional(s) in contiguous areas are overutilized, excessively distant, or inaccessible to the population of the area under consideration.

B. *Methodology.*

In determining whether an area meets the criteria established by paragraph A of this Part, the following methodology will be used:

1. *Rational Areas for the Delivery of Podiatric Services.*

(a) The following areas will be considered rational areas for the delivery of podiatric services:

(i) A county or a group of contiguous counties whose population centers are within 40 minutes travel time of each other.

(ii) A portion of a county, or an area made up of portions of more than one county, whose population, because of topography, market and/or transportation patterns or other factors, has limited access to contiguous area resources, as measured generally by a travel time of greater than 40 minutes from its population center to these resources.

(b) The following distances will be used as guidelines in determining distances corresponding to 40 minutes travel time:

(i) Under normal conditions with primary roads available: 25 miles.

(ii) In mountainous terrain or in areas with only secondary roads available: 20 miles.

(iii) In flat terrain or in areas connected by interstate highways: 30 miles.

Within inner portions of metropolitan areas, information on the public transportation system will be used to determine the area corresponding to 40 minutes travel time.

2. *Population Count.*

The population count used will be the total permanent resident civilian population of the area, excluding inmates of institutions, adjusted by the following formula to take into account the differing utilization rates of podiatric services by different age groups within the population:

Adjusted population=total population × (1 + 2.2 × (percent of population 65 and over) − 0.44 × (percent of population under 17)).

3. *Counting of Foot Care Practitioners.*

(a) All podiatrists providing patient care will be counted. However, in order to take into account productivity differences in podiatric practices associated with the age of the podiatrists, the following formula will be utilized:

Number of FTE podiatrists = 1.0 × (podiatrists under age 55)
+ .8 × (podiatrists age 55 and over)

(b) In order to take into account the fact that orthopedic surgeons and general and family practitioners devote a percentage of their time to foot care, the total available foot care practitioners will be computed as follows:

Number of foot care practitioners = number of FTE podiatrists
+ .15 × (number of orthopedic surgeons)
+ .02 × (number of general and family practioners).

4. *Determination of Size of Shortage.*

Size of shortage (in number of FTE podiatrists) will be computed as follows:

Podiatrist shortage = adjusted population/28,000 − number of FTE foot care practitioners.

5. *Contiguous Area Considerations.*

Podiatric professional(s) in areas contiguous to an area being considered for designation will be considered excessively distant, overutilized or inaccessible to the population of the area under consideration if one of the following conditions prevails in each contiguous area:

(a) Podiatric professional(s) in the contiguous area are more than 40 minutes travel time from the center of the area being considered for designation.

(b) The population-to-foot care practitioner ratio in the contiguous areas is in excess of 20,000:1, indicating that contiguous area podiatric professional(s) cannot be expected to help alleviate the shortage situation in the area for which designation is requested.

(c) Podiatric professional(s) in the contiguous area are inaccessible to the population of the area under consideration because of specified access barriers (such as economic or cultural barriers).

C. *Determination of Degree of Shortage.*

Designated areas will be assigned to groups, based on the ratio (R) of adjusted population to number of foot care practitioners, as follows:

Group 1 Areas with no foot care practitioners, and areas with R > 50,000 and no podiatrists.
Group 2 Other areas with R > 50,000.
Group 3 Areas with 50,000 > R > 28,000.

APPENDIX F TO PART 5—CRITERIA FOR DESIGNATION OF AREAS HAVING SHORTAGES OF PHARMACY PROFESSIONAL(S)

Part I—Geographic Areas

A. *Criteria.*

A geographic area will be designated as having a shortage of pharmacy professional(s) if the following three criteria are met:

1. The area is a rational area for the delivery of pharmacy services.

2. The number of pharmacists serving the area is less than the estimated requirement for pharmacists in the area, and the computed pharmacist shortage is at least 0.5.

3. Pharmacists in contiguous areas are overutilized or excessively distant from the population of the area under consideration.

B. *Methodology.*

In determining whether an area meets the criteria established by paragraph A of this Part, the following methodology will be used:

1. *Rational Areas for the Delivery of Pharmacy Services.*

(a) The following areas will be considered rational areas for the delivery of pharmacy services:

(i) A county, or a group of contiguous counties whose population centers are within 30 minutes travel time of each other; and

(ii) A portion of a county, or an area made up of portions of more than one county, whose population, because of topography, market or transportation patterns or other factors, has limited access to contiguous area resources, as measured generally by a travel time of greater than 30 minutes to these resources.

(b) The following distances will be used as guidelines in determining distances corresponding to 30 minutes travel time:

(i) Under normal conditions with primary roads available: 20 miles.

(ii) In mountainous terrain or in areas with only secondary roads available: 15 miles.

(iii) In flat terrain or in areas connected by interstate highways: 25 miles.

Within inner portions of metropolitan areas, information on the public transportation system will be used to determine the area corresponding to 30 minutes travel time.

2. *Counting of Pharmacists.*

All active pharmacists within the area will be counted, except those engaged in teaching, administration, or pharmaceutical research.

3. *Determination of Estimated Requirement for Pharmacists.*

(a) *Basic estimate.* The basic estimated requirement for pharmacists will be calculated as follows:

Basic pharmacist requirement = .15 × (resident civilian population/1,000) + .035 × (total number of physicians engaged in patient care in the area).

(b) *Adjusted estimate.* For areas with less than 20,000 persons, the following adjustment is made to the basic estimate to compensate for the lower expected productivity of small practices.

Estimated pharmacist requirement = (2 − population/20,000) × basic pharmacist requirement.

4. *Size of Shortage Computation.*

The size of the shortage will be computed as follows:

Pharmacist shortage = estimated pharmacist requirement − number of pharmacists available.

5. *Contiguous Area Considerations.*

Pharmacists in areas contiguous to an area being considered for designation will be considered excessively distant or overutilized if either:

(a) Pharmacy professional(s) in contiguous areas are more than 30 minutes travel time from the center of the area under consideration, or

(b) The number of pharmacists in each contiguous area is less than or equal to the estimated requirement for pharmacists for that contiguous area (as computed above).

C. *Determination of Degree-of-Shortage.*

Designated areas will be assigned to degree-of-shortage groups, based on the proportion of the estimated requirement for pharmacists which is currently available in the area, as follows:

Group 1—Areas with no pharmacists.

Group 2—Areas where the ratio of available pharmacists to pharmacists required is less than 0.5.

Group 3—Areas where the ratio of available pharmacists to pharmacists required is between 0.5 and 1.0.

APPENDIX G TO PART 5—CRITERIA FOR DESIGNATION OF AREAS HAVING SHORTAGES OF VETERINARY PROFESSIONAL(S)

Part I—Geographic Areas

A. *Criteria for Food Animal Veterinary Shortage.*

A geographic area will be designated as having a shortage of food animal veterinary professional(s) if the following three criteria are met:

1. The area is a rational area for the delivery of veterinary services.

2. The ratio of veterinary livestock units to food animal veterinarians in the area is at least 10,000 : 1, and the computed food animal veterinarian shortage to meet this ratio is at least 0.5.

3. Food animal veterinarians in contiguous areas are overutilized or excessively distant from the population of the area under consideration.

B. *Criteria for Companion Animal Veterinary Shortage.*

A geographic area will be designated as having a shortage of companion animal veterinary professional(s) if the following three criteria are met:

1. The area is a rational area for the delivery of veterinary services.

2. The ratio of resident civilian population to number of companion animal veterinarians in the area is at least 30,000 : 1 and the computed companion animal veterinary shortage to meet this ratio is at least 0.5.

3. Companion animal veterinarians in contiguous areas are overutilized or excessively distant from the population of the area under consideration.

C. *Methodology.*

In determining whether an area meets the criteria established by paragraphs A and B of this part, the following methodology will be used:

1. *Rational Areas for the Delivery of Veterinary Services.*

(a) The following areas will be considered rational areas for the delivery of veterinary services:

(i) A county, or a group of contiguous counties whose population centers are within 40 minutes travel time of each other.

(ii) A portion of a county (or an area made up of portions of more than one county) which, because of topography, market and/or transportation patterns or other factors, has limited access to contiguous area resources, as measured generally by a travel time of greater than 40 minutes to these resources.

(b) The following distances will be used as guidelines in determining distances corresponding to 40 minutes travel time:

(i) Under normal conditions with primary roads available: 25 miles.

(ii) In mountainous terrain or in areas with only secondary roads available: 20 miles.

(iii) In flat terrain or in areas connected by interstate highways: 30 miles.

2. *Determination of Number of Veterinary Livestock Units (VLU) Requiring Care.*

Since various types of food animals require varying amounts of veterinary care, each type of animal has been assigned a weight indicating the amount of veterinary care it requires relative to that required by a milk cow. Those weights are used to compute the number of ''Veterinary Livestock Units'' (VLU) for which veterinary care is required.

The VLU is computed as follows:

Veterinary Livestock Units (VLU)=(number of milk cows)
+.2×(number of other cattle and calves)
+.05×(number of hogs and pigs)
+.05×(number of sheep)
+.002×(number of poultry).

3. *Counting of Food Animal Veterinarians.*

The number of food animal veterinarians is determined by weighting the number of veterinarians within each of several practice categories according to the average fraction of practice time in that category which is devoted to food animal veterinary care, as follows:

Number of Food Animal Veterinarians=(number of veterinarians in large animal practice, exclusively)
+(number of veterinarians in bovine practice, exclusively)
+(number of veterinarians in poultry practice, exclusively)
+.75×(mixed practice veterinarians with greater than 50% of practice in large animal care)
+.5×(mixed practice veterinarians with approximately 50% of practice in large animal care)
+.25×(mixed practice veterinarians with less than 50% of practice in large animal care).

4. *Counting of Companion Animal Veterinarians* (that is, those who provide services for dogs, cats, horses, and any other animals maintained as companions to the owner rather than as food animals).

The number of full-time equivalent companion animal veterinarians is determined by weighting the number of veterinarians within each of several practice categories by the average portion of their practice which is devoted to companion animal care by the practitioners within that category, as follows:

Number of Companion Animal Veterinarians=(number of veterinarians in large animal practice, exclusively)
+(number of veterinarians in equine practice, exclusively)
+.75×(mixed practice veterinarians with greater than 50% of practice in small animal care)
+.5×(mixed practice veterinarians with approximately 50% of practice in small animal care)
+.25×(mixed practice veterinarians with less than 50% of practice in small animal care).

5. *Size of Shortage Computation.*

The size of shortage will be computed as follows:

(a) Food animal veterinarian shortage=(VLU/10,000) − (number of food animal veterinarians).

(b) Companion animal veterinarian shortage=(resident civilian pop./

30,000) – (number of companion animal veterinarians).

6. *Contiguous Area Considerations.*

Veterinary professional(s) in areas contiguous to an area being considered for designation will be considered excessively distant from the population of the area or overutilized if one of the following conditions prevails in each contiguous area:

(a) Veterinary professional(s) in the contiguous area are more than 60 minutes travel time from the center of the area being considered for designation (measured in accordance with paragraph C.1.(b) of this part).

(b) In the case of food animal veterinary professional(s), the VLU-to-food animal veterinarian ratio in the contiguous area is in excess of 5,000 : 1.

(c) In the case of companion animal veterinary professional(s), the population-to-companion animal veterinarian ratio in the contiguous area is in excess of 15,000 : 1.

C. *Determination of Degree-of-Shortage.*

Designated areas will be assigned to degree-of-shortage groups as follows:

Group 1—Areas with a food animal veterinarian shortage and no veterinarians.

Group 2—Areas (not included above) with a food animal veterinarian shortage and no food animal veterinarians.

Group 3—All other food animal veterinarian shortage areas.

Group 4—All companion animal shortage areas (not included above) having no veterinarians.

Group 5—All other companion animal shortage areas.

PART 5a—RURAL PHYSICIAN TRAINING GRANT PROGRAM

Sec.
5a.1 Statutory basis and purpose.
5a.2 Applicability.
5a.3 Definition of Underserved Rural Community.

AUTHORITY: Sec. 749B of the Public Health Service Act (42 U.S.C. 293k) as amended.

SOURCE: 75 FR 29451, May 26, 2010, unless otherwise noted.

§5a.1 Statutory basis and purpose.

This part implements section 749B(f) of the Public Health Service Act. These provisions define ''underserved rural community'' for purposes of the Rural Physician Training Grant Program.

§5a.2 Applicability.

This part applies to grants made under section 749B of the Public Health Service Act.

§5a.3 Definition of Underserved Rural Community.

Underserved Rural Community means a community:

(a) Located in:

(1) A non-Metropolitan County or Micropolitan county; or

(2) If it is within a Metropolitan county, all Census Tracts that are assigned a Rural-Urban Commuting Area (RUCAs) codes of 4–10; or

(3) Census Tracts within a Metropolitan Area with RUCA codes 2 and 3 that are larger than 400 square miles and have population density of less than 30 people per square mile; and

(b) Located in a current:

(1) Federally-designated Primary Health Care Geographic Health Professions Shortage Area, (under section 332(a)(1)(A) of the Public Health Service Act) or

(2) Federally-designated Medically Underserved Area (under section 330(b)(3) of the Public Health Service Act).

PART 6—FEDERAL TORT CLAIMS ACT COVERAGE OF CERTAIN GRANTEES AND INDIVIDUALS

Sec.
6.1 Applicability.
6.2 Definitions.
6.3 Eligible entities.
6.4 Covered individuals.
6.5 Deeming process for eligible entities.
6.6 Covered acts and omissions.

AUTHORITY: Sections 215 and 224 of the Public Health Service Act, 42 U.S.C. 216 and 233.

SOURCE: 60 FR 22532, May 8, 1995, unless otherwise noted.

§6.1 Applicability.

This part applies to entities and individuals whose acts and omissions related to the performance of medical, surgical, dental, or related functions are covered by the Federal Tort Claims Act (28 U.S.C. 1346(b) and 2671–2680) in accordance with the provisions of section 224(g) of the Public Health Service Act (42 U.S.C. 233(g)).

§6.2 Definitions.

Act means the Public Health Service Act, as amended.

Attorney General means the Attorney General of the United States and any

other officer or employee of the Department of Justice to whom the authority involved has been delegated.

Covered entity means an entity described in § 6.3 which has been deemed by the Secretary, in accordance with § 6.5, to be covered by this part.

Covered individual means an individual described in § 6.4.

Effective date as used in § 6.5 and § 6.6 refers to the date of the Secretary's determination that an entity is a covered entity.

Secretary means the Secretary of Health and Human Services (HHS) and any other officer or employee of the Department of HHS to whom the authority involved has been delegated.

Subrecipient means an entity which receives a grant or a contract from a covered entity to provide a full range of health services on behalf of the covered entity.

§ 6.3 Eligible entities.

(a) *Grantees*. Entities eligible for coverage under this part are public and nonprofit private entities receiving Federal funds under any of the following grant programs:

(1) Section 329 of the Act (relating to grants for migrant health centers);

(2) Section 330 of the Act (relating to grants for community health centers);

(3) Section 340 of the Act (relating to grants for health services for the homeless); and

(4) Section 340A of the Act (relating to grants for health services for residents of public housing).

(b) *Subrecipients*. Entities that are subrecipients of grant funds described in paragraph (a) of this section are eligible for coverage only if they provide a full range of health care services on behalf of an eligible grantee and only for those services carried out under the grant funded project.

§ 6.4 Covered individuals.

(a) Officers and employees of a covered entity are eligible for coverage under this part.

(b) Contractors of a covered entity who are physicians or other licensed or certified health care practitioners are eligible for coverage under this part if they meet the requirements of section 224(g)(5) of the Act.

(c) An individual physician or other licensed or certified health care practitioner who is an officer, employee, or contractor of a covered entity will not be covered for acts or omissions occurring after receipt by the entity employing such individual of notice of a final determination by the Attorney General that he or she is no longer covered by this part, in accordance with section 224(i) of the Act.

§ 6.5 Deeming process for eligible entities.

Eligible entities will be covered by this part only on and after the effective date of a determination by the Secretary that they meet the requirements of section 224(h) of the Act. In making such determination, the Secretary will receive such assurances and conduct such investigations as he or she deems necessary.

§ 6.6 Covered acts and omissions.

(a) Only acts and omissions occurring on and after the effective date of the Secretary's determination under § 6.5 and before the later date specified in section 224(g)(3) of the Act are covered by this part.

(b) Only claims for damage for personal injury, including death, resulting from the performance of medical, surgical, dental, or related functions are covered by this part.

(c) With respect to covered individuals, only acts and omissions within the scope of their employment (or contract for services) are covered. If a covered individual is providing services which are not on behalf of the covered entity, such as on a volunteer basis or on behalf of a third-party (except as described in paragraph (d) of this section), whether for pay or otherwise, acts and omissions which are related to such services are not covered.

(d) Only acts and omissions related to the grant-supported activity of entities are covered. Acts and omissions related to services provided to individuals who are not patients of a covered entity will be covered only if the Secretary determines that:

(1) The provision of the services to such individuals benefits patients of the entity and general populations that could be served by the entity through

community-wide intervention efforts within the communities served by such entity;

(2) The provision of the services to such individuals facilitates the provision of services to patients of the entity; or

(3) Such services are otherwise required to be provided to such individuals under an employment contract or similar arrangement between the entity and the covered individual.

(e) *Examples*. The following are examples of situations within the scope of paragraph (d) of this section:

(1) A community health center deemed to be a covered entity establishes a school-based or school-linked health program as part of its grant supported activity. Even though the students treated are not necessarily registered patients of the center, the center and its health care practitioners will be covered for services provided, if the Secretary makes the determination in paragraph (d)(1) of this section.

(2) A migrant health center requires its physicians to obtain staff privileges at a community hospital. As a condition of obtaining such privileges, and thus being able to admit the center's patients to the hospital, the physicians must agree to provide occasional coverage of the hospital's emergency room. The Secretary would be authorized to determine that this coverage is necessary to facilitate the provision of services to the grantee's patients, and that it would therefore be covered by paragraph (d)(2) of this section.

(3) A homeless health services grantee makes arrangements with local community providers for after-hours coverage of its patients. The grantee's physicians are required by their employment contracts to provide periodic cross-coverage for patients of these providers, in order to make this arrangement feasible. The Secretary may determine that the arrangement is within the scope of paragraph (d)(3) of this section.

[60 FR 22532, May. 8, 1995; 60 FR 36073, July 13, 1995]

PART 7—DISTRIBUTION OF REFERENCE BIOLOGICAL STANDARDS AND BIOLOGICAL PREPARATIONS

Sec.
7.1 Applicability.
7.2 Establishment of a user charge.
7.3 Definitions.
7.4 Schedule of charges.
7.5 Payment procedures.
7.6 Exemptions.

AUTHORITY: Sec. 215, 58 Stat. 690, as amended (42 U.S.C. 216); title V of the Independent Offices Appropriation Act of 1952 (31 U.S.C. 9701); and sec. 352 of the Public Health Service Act, as amended (42 U.S.C. 263).

SOURCE: 52 FR 11073, Apr. 7, 1987, unless otherwise noted.

§7.1 Applicability.

The provisions of this part are applicable to private entities requesting from the Centers for Disease Control (CDC) reference biological standards and biological preparations for use in their laboratories.

§7.2 Establishment of a user charge.

Except as otherwise provided in §7.6, a user charge shall be imposed to cover the cost to CDC of producing and distributing reference biological standards and biological preparations.

§7.3 Definitions.

Biological standards means a uniform and stable reference biological substance which allows measurements of relative potency to be made and described in a common currency of international and national units of activity.

Biological preparations means a reference biological substance which may be used for a purpose similar to that of a standard, but which has been established without a full collaborative study, or where a collaborative study has shown that it is not appropriate to establish the preparation as an international standard.

§7.4 Schedule of charges.

The charges imposed in §7.2 are based on the amount published in CDC's price list of available products. These charges will reflect direct costs (such as salaries and equipment), indirect costs (such as rent, telephone service,

and a proportionate share of management and administrative costs), and the costs of particular ingredients. Charges may vary over time and between different biological standards or biological preparations, depending upon the cost of ingredients and the complexity of production. An up-to-date schedule of charges is available from the Biological Products Branch, Center for Infectious Diseases, Centers for Disease Control, 1600 Clifton Road, Atlanta, Georgia 30333.

§ 7.5 Payment procedures.

The requester may obtain information on terms of payment and a fee schedule by writing the ''Centers for Disease Control,'' Financial Management Office, Buckhead Facility, Room 200, Centers for Disease Control, 1600 Clifton Road, Atlanta, Georgia 30333.

§ 7.6 Exemptions.

State and local health departments, governmental institutions (e.g., State hospitals and universities), the World Health Organization, and ministries of health of foreign governments may be exempted from paying user charges, when using biological standards or biological preparations for public health purposes.

PART 8—CERTIFICATION OF OPIOID TREATMENT PROGRAMS

Subpart A—Accreditation

Sec.

8.1 Scope.
8.2 Definitions.
8.3 Application for approval as an accreditation body.
8.4 Accreditation body responsibilities.
8.5 Periodic evaluation of accreditation bodies.
8.6 Withdrawal of approval of accreditation bodies.

Subpart B—Certification and Treatment Standards

8.11 Opioid treatment program certification.
8.12 Federal opioid treatment standards.
8.13 Revocation of accreditation and accreditation body approval.
8.14 Suspension or revocation of certification.
8.15 Forms.

Subpart C—Procedures for Review of Suspension or Proposed Revocation of OTP Certification, and of Adverse Action Regarding Withdrawal of Approval of an Accreditation Body

8.21 Applicability.
8.22 Definitions.
8.23 Limitation on issues subject to review.
8.24 Specifying who represents the parties.
8.25 Informal review and the reviewing official's response.
8.26 Preparation of the review file and written arguments.
8.27 Opportunity for oral presentation.
8.28 Expedited procedures for review of immediate suspension.
8.29 Ex parte communications.
8.30 Transmission of written communications by reviewing official and calculation of deadlines.
8.31 Authority and responsibilities of the reviewing official.
8.32 Administrative record.
8.33 Written decision.
8.34 Court review of final administrative action; exhaustion of administrative remedies.

AUTHORITY: 21 U.S.C. 823; 42 U.S.C. 257a, 290aa(d), 290dd–2, 300x–23, 300x–27(a), 300y–11.

SOURCE: 66 FR 4090, Jan. 17, 2001, unless otherwise noted.

Subpart A—Accreditation

§ 8.1 Scope.

The regulations in this part establish the procedures by which the Secretary of Health and Human Services (the Secretary) will determine whether a practitioner is qualified under section 303(g) of the Controlled Substances Act (21 U.S.C. 823(g)) to dispense opioid drugs in the treatment of opioid addiction. These regulations also establish the Secretary's standards regarding the appropriate quantities of opioid drugs that may be provided for unsupervised use by individuals undergoing such treatment (21 U.S.C. 823(g)(1)). Under these regulations, a practitioner who intends to dispense opioid drugs in the treatment of opioid addiction must first obtain from the Secretary or by delegation, from the Administrator, Substance Abuse and Mental Health Services Administration (SAMHSA), a certification that the practitioner is

qualified under the Secretary's standards and will comply with such standards. Eligibility for certification will depend upon the practitioner obtaining accreditation from an accreditation body that has been approved by SAMHSA. These regulations establish the procedures whereby an entity can apply to become an approved accreditation body. This part also establishes requirements and general standards for accreditation bodies to ensure that practitioners are consistently evaluated for compliance with the Secretary's standards for opiate addiction treatment with an opioid agonist treatment medication.

§8.2 Definitions.

The following definitions apply to this part:

Accreditation means the process of review and acceptance by an accreditation body.

Accreditation body means a body that has been approved by SAMHSA under §8.3 to accredit opioid treatment programs using opioid agonist treatment medications.

Accreditation body application means the application filed with SAMHSA for purposes of obtaining approval as an accreditation body, as described in §8.3(b).

Accreditation elements mean the elements or standards that are developed and adopted by an accreditation body and approved by SAMHSA.

Accreditation survey means an onsite review and evaluation of an opioid treatment program by an accreditation body for the purpose of determining compliance with the Federal opioid treatment standards described in §8.12.

Accredited opioid treatment program means an opioid treatment program that is the subject of a current, valid accreditation from an accreditation body approved by SAMHSA under §8.3(d).

Certification means the process by which SAMHSA determines that an opioid treatment program is qualified to provide opioid treatment under the Federal opioid treatment standards.

Certification application means the application filed by an opioid treatment program for purposes of obtaining certification from SAMHSA, as described in §8.11(b).

Certified opioid treatment program means an opioid treatment program that is the subject of a current, valid certification under §8.11.

Comprehensive maintenance treatment is maintenance treatment provided in conjunction with a comprehensive range of appropriate medical and rehabilitative services.

Detoxification treatment means the dispensing of an opioid agonist treatment medication in decreasing doses to an individual to alleviate adverse physical or psychological effects incident to withdrawal from the continuous or sustained use of an opioid drug and as a method of bringing the individual to a drug-free state within such period.

Federal opioid treatment standards means the standards established by the Secretary in §8.12 that are used to determine whether an opioid treatment program is qualified to engage in opioid treatment. The Federal opioid treatment standards established in §8.12 also include the standards established by the Secretary regarding the quantities of opioid drugs which may be provided for unsupervised use.

For-cause inspection means an inspection of an opioid treatment program by the Secretary, or by an accreditation body, that may be operating in violation of Federal opioid treatment standards, may be providing substandard treatment, or may be serving as a possible source of diverted medications.

Interim maintenance treatment means maintenance treatment provided in conjunction with appropriate medical services while a patient is awaiting transfer to a program that provides comprehensive maintenance treatment.

Long-term detoxification treatment means detoxification treatment for a period more than 30 days but not in excess of 180 days.

Maintenance treatment means the dispensing of an opioid agonist treatment medication at stable dosage levels for a period in excess of 21 days in the treatment of an individual for opioid addiction.

Medical director means a physician, licensed to practice medicine in the jurisdiction in which the opioid treatment program is located, who assumes responsibility for administering all medical services performed by the program, either by performing them directly or by delegating specific responsibility to authorized program physicians and healthcare professionals functioning under the medical director's direct supervision.

Medical and rehabilitative services means services such as medical evaluations, counseling, and rehabilitative and other social programs (e.g., vocational and educational guidance, employment placement), that are intended to help patients in opioid treatment programs become and/or remain productive members of society.

Medication unit means a facility established as part of, but geographically separate from, an opioid treatment program from which licensed private practitioners or community pharmacists dispense or administer an opioid agonist treatment medication or collect samples for drug testing or analysis.

Opiate addiction is defined as a cluster of cognitive, behavioral, and physiological symptoms in which the individual continues use of opiates despite significant opiate-induced problems. Opiate dependence is characterized by repeated self-administration that usually results in opiate tolerance, withdrawal symptoms, and compulsive drug-taking. Dependence may occur with or without the physiological symptoms of tolerance and withdrawal.

Opioid agonist treatment medication means any opioid agonist drug that is approved by the Food and Drug Administration under section 505 of the Federal Food, Drug, and Cosmetic Act (21 U.S.C. 355) for use in the treatment of opiate addiction.

Opioid drug means any drug having an addiction-forming or addiction-sustaining liability similar to morphine or being capable of conversion into a drug having such addiction-forming or addiction-sustaining liability.

Opioid treatment means the dispensing of an opioid agonist treatment medication, along with a comprehensive range of medical and rehabilitative services, when clinically necessary, to an individual to alleviate the adverse medical, psychological, or physical effects incident to opiate addiction. This term encompasses detoxification treatment, short-term detoxification treatment, long-term detoxification treatment, maintenance treatment, comprehensive maintenance treatment, and interim maintenance treatment.

Opioid treatment program or ''OTP'' means a program or practitioner engaged in opioid treatment of individuals with an opioid agonist treatment medication.

Patient means any individual who undergoes treatment in an opioid treatment program.

Program sponsor means the person named in the application for certification described in § 8.11(b) as responsible for the operation of the opioid treatment program and who assumes responsibility for all its employees, including any practitioners, agents, or other persons providing medical, rehabilitative, or counseling services at the program or any of its medication units. The program sponsor need not be a licensed physician but shall employ a licensed physician for the position of medical director.

Registered opioid treatment program means an opioid treatment program that is registered under 21 U.S.C. 823(g).

Short-term detoxification treatment means detoxification treatment for a period not in excess of 30 days.

State Authority is the agency designated by the Governor or other appropriate official designated by the Governor to exercise the responsibility and authority within the State or Territory for governing the treatment of opiate addiction with an opioid drug.

Treatment plan means a plan that outlines for each patient attainable short-term treatment goals that are mutually acceptable to the patient and the opioid treatment program and which specifies the services to be provided and the frequency and schedule for their provision.

§ 8.3 Application for approval as an accreditation body.

(a) *Eligibility*. Private nonprofit organizations or State governmental entities, or political subdivisions thereof, capable of meeting the requirements of this part may apply for approval as an accreditation body.

(b) *Application for initial approval*. Three copies of an accreditation body application form [SMA–163] shall be submitted to SAMHSA at rm. 12–105, 5600 Fishers Lane, Rockville, MD 20857, and marked ATTENTION: OTP Certification Program. SAMHSA will consider and accept the electronic submission of these materials when electronic submission systems are developed and available. Accreditation body applications shall include the following information and supporting documentation:

(1) Name, address, and telephone number of the applicant and a responsible official for the accreditation body. The application shall be signed by the responsible official;

(2) Evidence of the nonprofit status of the applicant (*i.e.*, of fulfilling Internal Revenue Service requirements as a nonprofit organization) if the applicant is not a State governmental entity or political subdivision;

(3) A set of the accreditation elements or standards and a detailed discussion showing how the proposed accreditation elements or standards will ensure that each OTP surveyed by the applicant is qualified to meet or is meeting each of the Federal opioid treatment standards set forth in § 8.12;

(4) A detailed description of the applicant's decisionmaking process, including:

(i) Procedures for initiating and performing onsite accreditation surveys of OTPs;

(ii) Procedures for assessing OTP personnel qualifications;

(iii) Copies of an application for accreditation, guidelines, instructions, and other materials the applicant will send to OTPs during the accreditation process, including a request for a complete history of prior accreditation activities and a statement that all information and data submitted in the application for accreditation is true and accurate, and that no material fact has been omitted;

(iv) Policies and procedures for notifying OTPs and SAMHSA of deficiencies and for monitoring corrections of deficiencies by OTPs;

(v) Policies and procedures for suspending or revoking an OTP's accreditation;

(vi) Policies and procedures that will ensure processing of applications for accreditation and applications for renewal of accreditation within a timeframe approved by SAMHSA; and

(vii) A description of the applicant's appeals process to allow OTPs to contest adverse accreditation decisions.

(5) Policies and procedures established by the accreditation body to avoid conflicts of interest, or the appearance of conflicts of interest, by the applicant's board members, commissioners, professional personnel, consultants, administrative personnel, and other representatives;

(6) A description of the education, experience, and training requirements for the applicant's professional staff, accreditation survey team membership, and the identification of at least one licensed physician on the applicant's staff;

(7) A description of the applicant's training policies;

(8) Fee schedules, with supporting cost data;

(9) Satisfactory assurances that the body will comply with the requirements of § 8.4, including a contingency plan for investigating complaints under § 8.4(e);

(10) Policies and procedures established to protect confidential information the applicant will collect or receive in its role as an accreditation body; and

(11) Any other information SAMHSA may require.

(c) *Application for renewal of approval*. An accreditation body that intends to continue to serve as an accreditation body beyond its current term shall apply to SAMHSA for renewal, or notify SAMHSA of its intention not to apply for renewal, in accordance with the following procedures and schedule:

(1) At least 9 months before the date of expiration of an accreditation body's term of approval, the body shall inform SAMHSA in writing of its intent to seek renewal.

(2) SAMHSA will notify the applicant of the relevant information, materials, and supporting documentation required under paragraph (b) of this section that the applicant shall submit as part of the renewal procedure.

(3) At least 3 months before the date of expiration of the accreditation body's term of approval, the applicant shall furnish to SAMHSA three copies of a renewal application containing the information, materials, and supporting documentation requested by SAMHSA under paragraph (c)(2) of this section.

(4) An accreditation body that does not intend to renew its approval shall so notify SAMHSA at least 9 months before the expiration of the body's term of approval.

(d) *Rulings on applications for initial approval or renewal of approval.* (1) SAMHSA will grant an application for initial approval or an application for renewal of approval if it determines the applicant substantially meets the accreditation body requirements of this subpart.

(2) If SAMHSA determines that the applicant does not substantially meet the requirements set forth in this subpart. SAMHSA will notify the applicant of the deficiencies in the application and request that the applicant resolve such deficiencies within 90 days of receipt of the notice. If the deficiencies are resolved to the satisfaction of SAMHSA within the 90-day time period, the body will be approved as an accreditation body. If the deficiencies have not been resolved to the satisfaction of SAMHSA within the 90-day time period, the application for approval as an accreditation body will be denied.

(3) If SAMHSA does not reach a final decision on a renewal application before the expiration of an accreditation body's term of approval, the approval will be deemed extended until SAMHSA reaches a final decision, unless an accreditation body does not rectify deficiencies in the application within the specified time period, as required in paragraph (d)(2) of this section.

(e) *Relinquishment of approval.* An accreditation body that intends to relinquish its accreditation approval before expiration of the body's term of approval shall submit a letter of such intent to SAMHSA, at the address in paragraph (b) of this section, at least 9 months before relinquishing such approval.

(f) *Notification.* An accreditation body that does not apply for renewal of approval, or is denied such approval by SAMHSA, relinquishes its accreditation approval before expiration of its term of approval, or has its approval withdrawn, shall:

(1) Transfer copies of records and other related information as required by SAMHSA to a location, including another accreditation body, and according to a schedule approved by SAMHSA; and

(2) Notify, in a manner and time period approved by SAMHSA, all OTPs accredited or seeking accreditation by the body that the body will no longer have approval to provide accreditation services.

(g) *Term of approval.* An accreditation body's term of approval is for a period not to exceed 5 years.

(h) *State accreditation bodies.* State governmental entities, including political subdivisions thereof, may establish organizational units that may act as accreditation bodies, provided such units meet the requirements of this section, are approved by SAMHSA under this section, and have taken appropriate measures to prevent actual or apparent conflicts of interest, including cases in which State or Federal funds are used to support opioid treatment services.

§ 8.4 Accreditation body responsibilities.

(a) *Accreditation surveys and for cause inspections.* (1) Accreditation bodies shall conduct routine accreditation surveys for initial, renewal, and continued accreditation of each OTP at least every 3 years.

(2) Accreditation bodies must agree to conduct for-cause inspections upon the request of SAMHSA.

(3) Accreditation decisions shall be fully consistent with the policies and procedures submitted as part of the approved accreditation body application.

(b) *Response to noncompliant programs.* (1) If an accreditation body receives or discovers information that suggests

that an OTP is not meeting Federal opioid treatment standards, or if survey of the OTP by the accreditation body otherwise demonstrates one or more deficiencies in the OTP, the accreditation body shall as appropriate either require and monitor corrective action or shall suspend or revoke accreditation of the OTP, as appropriate based on the significance of the deficiencies.

(i) Accreditation bodies shall either not accredit or shall revoke the accreditation of any OTP that substantially fails to meet the Federal opioid treatment standards.

(ii) Accreditation bodies shall notify SAMHSA as soon as possible but in no case longer than 48 hours after becoming aware of any practice or condition in an OTP that may pose a serious risk to public health or safety or patient care.

(iii) If an accreditation body determines that an OTP is substantially meeting the Federal opioid treatment standards, but is not meeting one or more accreditation elements, the accreditation body shall determine the necessary corrective measures to be taken by the OTP, establish a schedule for implementation of such measures, and notify the OTP in writing that it must implement such measures within the specified schedule in order to ensure continued accreditation. The accreditation body shall verify that the necessary steps are taken by the OTP within the schedule specified and that all accreditation elements are being substantially met or will be substantially met.

(2) Nothing in this part shall prevent accreditation bodies from granting accreditation, contingent on promised programmatic or performance changes, to OTPs with less substantial violations. Such accreditation shall not exceed 12 months. OTPs that have been granted such accreditation must have their accreditation revoked if they fail to make changes to receive unconditional accreditation upon resurvey or reinspection.

(c) *Recordkeeping*. (1) Accreditation bodies shall maintain records of their accreditation activities for at least 5 years from the creation of the record. Such records must contain sufficient detail to support each accreditation decision made by the accreditation body.

(2) Accreditation bodies shall establish procedures to protect confidential information collected or received in their role as accreditation bodies that are consistent with, and that are designed to ensure compliance with, all Federal and State laws, including 42 CFR part 2.

(i) Information collected or received for the purpose of carrying out accreditation body responsibilities shall not be used for any other purpose or disclosed, other than to SAMHSA or its duly designated representatives, unless otherwise required by law or with the consent of the OTP.

(ii) Nonpublic information that SAMHSA shares with the accreditation body concerning an OTP shall not be further disclosed except with the written permission of SAMHSA.

(d) *Reporting*. (1) Accreditation bodies shall provide to SAMHSA any documents and information requested by SAMHSA within 5 days of receipt of the request.

(2) Accreditation bodies shall make a summary of the results of each accreditation survey available to SAMHSA upon request. Such summaries shall contain sufficient detail to justify the accreditation action taken.

(3) Accreditation bodies shall provide SAMHSA upon request a list of each OTP surveyed and the identity of all individuals involved in the conduct and reporting of survey results.

(4) Accreditation bodies shall submit to SAMHSA the name of each OTP for which the accreditation body accredits conditionally, denies, suspends, or revokes accreditation, and the basis for the action, within 48 hours of the action.

(5) Notwithstanding any reports made to SAMHSA under paragraphs (d)(1) through (d)(4) of this section, each accreditation body shall submit to SAMHSA semiannually, on January 15 and July 15 of each calendar year, a report consisting of a summary of the results of each accreditation survey conducted in the past year. The summary shall contain sufficient detail to justify each accreditation action taken.

(6) All reporting requirements listed in this section shall be provided to SAMHSA at the address specified in § 8.3(b).

(e) *Complaint response.* Accreditation bodies shall have policies and procedures to respond to complaints from SAMHSA, patients, facility staff, and others, within a reasonable period of time but not more than 5 days of the receipt of the complaint. Accreditation bodies shall also agree to notify SAMHSA within 48 hours of receipt of a complaint and keep SAMHSA informed of all aspects of the response to the complaint.

(f) *Modifications of accreditation elements.* Accreditation bodies shall obtain SAMHSA's authorization prior to making any substantive (*i.e.,* noneditorial) change in accreditation elements.

(g) *Conflicts of interest.* The accreditation body shall maintain and apply policies and procedures that SAMHSA has approved in accordance with § 8.3 to reduce the possibility of actual conflict of interest, or the appearance of a conflict of interest, on the part of individuals who act on behalf of the accreditation body. Individuals who participate in accreditation surveys or otherwise participate in the accreditation decision or an appeal of the accreditation decision, as well as their spouses and minor children, shall not have a financial interest in the OTP that is the subject of the accreditation survey or decision.

(h) *Accreditation teams.* (1) An accreditation body survey team shall consist of healthcare professionals with expertise in drug abuse treatment and, in particular, opioid treatment. The accreditation body shall consider factors such as the size of the OTP, the anticipated number of problems, and the OTP's accreditation history, in determining the composition of the team. At a minimum, survey teams shall consist of at least two healthcare professionals whose combined expertise includes:

(i) The dispensing and administration of drugs subject to control under the Controlled Substances Act (21 U.S.C. 801 *et seq.*);

(ii) Medical issues relating to the dosing and administration of opioid agonist treatment medications for the treatment of opioid addiction;

(iii) Psychosocial counseling of individuals undergoing opioid treatment; and

(iv) Organizational and administrative issues associated with opioid treatment programs.

(2) Members of the accreditation team must be able to recuse themselves at any time from any survey in which either they or the OTP believes there is an actual conflict of interest or the appearance of a conflict of interest.

(i) *Accreditation fees.* Fees charged to OTPs for accreditation shall be reasonable. SAMHSA generally will find fees to be reasonable if the fees are limited to recovering costs to the accreditation body, including overhead incurred. Accreditation body activities that are not related to accreditation functions are not recoverable through fees established for accreditation.

(1) The accreditation body shall make public its fee structure, including those factors, if any, contributing to variations in fees for different OTPs.

(2) At SAMHSA's request, accreditation bodies shall provide to SAMHSA financial records or other materials, in a manner specified by SAMHSA, to assist in assessing the reasonableness of accreditation body fees.

§ 8.5 Periodic evaluation of accreditation bodies.

SAMHSA will evaluate periodically the performance of accreditation bodies primarily by inspecting a selected sample of the OTPs accredited by the accrediting body and by evaluating the accreditation body's reports of surveys conducted, to determine whether the OTPs surveyed and accredited by the accreditation body are in compliance with the Federal opioid treatment standards. The evaluation will include a determination of whether there are major deficiencies in the accreditation body's performance that, if not corrected, would warrant withdrawal of the approval of the accreditation body under § 8.6.

§8.6 Withdrawal of approval of accreditation bodies.

If SAMHSA determines that an accreditation body is not in substantial compliance with this subpart, SAMHSA shall take appropriate action as follows:

(a) *Major deficiencies.* If SAMHSA determines that the accreditation body has a major deficiency, such as commission of fraud, material false statement, failure to perform a major accreditation function satisfactorily, or significant noncompliance with the requirements of this subpart, SAMHSA shall withdraw approval of that accreditation body.

(1) In the event of a major deficiency, SAMHSA shall notify the accreditation body of the agency's action and the grounds on which the approval was withdrawn.

(2) An accreditation body that has lost its approval shall notify each OTP that has been accredited or is seeking accreditation that the accreditation body's approval has been withdrawn. Such notification shall be made within a time period and in a manner approved by SAMHSA.

(b) *Minor deficiencies.* If SAMHSA determines that the accreditation body has minor deficiencies in the performance of an accreditation function, that are less serious or more limited than the types of deficiencies described in paragraph (a) of this section, SAMHSA will notify the body that it has 90 days to submit to SAMHSA a plan of corrective action. The plan must include a summary of corrective actions and a schedule for their implementation. SAMHSA may place the body on probationary status for a period of time determined by SAMHSA, or may withdraw approval of the body if corrective action is not taken.

(1) If SAMHSA places an accreditation body on probationary status, the body shall notify all OTPs that have been accredited, or that are seeking accreditation, of the accreditation body's probationary status within a time period and in a manner approved by SAMHSA.

(2) Probationary status will remain in effect until such time as the body can demonstrate to the satisfaction of SAMHSA that it has successfully implemented or is implementing the corrective action plan within the established schedule, and the corrective actions taken have substantially eliminated all identified problems.

(3) If SAMHSA determines that an accreditation body that has been placed on probationary status is not implementing corrective actions satisfactorily or within the established schedule, SAMHSA may withdraw approval of the accreditation body. The accreditation body shall notify all OTPs that have been accredited, or are seeking accreditation, of the accreditation body's loss of SAMHSA approval within a time period and in a manner approved by SAMHSA.

(c) *Reapplication.* (1) An accreditation body that has had its approval withdrawn may submit a new application for approval if the body can provide information to SAMHSA to establish that the problems that were grounds for withdrawal of approval have been resolved.

(2) If SAMHSA determines that the new application demonstrates that the body satisfactorily has addressed the causes of its previous unacceptable performance, SAMHSA may reinstate approval of the accreditation body.

(3) SAMHSA may request additional information or establish additional conditions that must be met before SAMHSA approves the reapplication.

(4) SAMHSA may refuse to accept an application from a former accreditation body whose approval was withdrawn because of fraud, material false statement, or willful disregard of public health.

(d) *Hearings.* An opportunity to challenge an adverse action taken regarding withdrawal of approval of an accreditation body shall be addressed through the relevant procedures set forth in subpart C of this part, except that the procedures in §8.28 for expedited review of an immediate suspension would not apply to an accreditation body that has been notified under paragraph (a) or (b) of this section of the withdrawal of its approval.

Subpart B—Certification and Treatment Standards

§ 8.11 Opioid treatment program certification.

(a) *General.* (1) An OTP must be the subject of a current, valid certification from SAMHSA to be considered qualified by the Secretary under section 303(g)(1) of the Controlled Substances Act (21 U.S.C. 823(g)(1)) to dispense opioid drugs in the treatment of opioid addiction. An OTP must be determined to be qualified under section 303(g)(1) of the Controlled Substances Act, and must be determined to be qualified by the Attorney General under section 303(g)(1), to be registered by the Attorney General to dispense opioid agonist treatment medications to individuals for treatment of opioid addiction.

(2) To obtain certification from SAMHSA, an OTP must meet the Federal opioid treatment standards in § 8.12, must be the subject of a current, valid accreditation by an accreditation body or other entity designated by SAMHSA, and must comply with any other conditions for certification established by SAMHSA.

(3) Certification shall be granted for a term not to exceed 3 years, except that certification may be extended during the third year if an application for accreditation is pending.

(b) *Application for certification.* Three copies of an application for certification must be submitted by the OTP to the address identified in § 8.3(b). SAMHSA will consider and accept the electronic submission of these materials when electronic submission systems are developed and available. The application for certification shall include:

(1) A description of the current accreditation status of the OTP;

(2) A description of the organizational structure of the OTP;

(3) The names of the persons responsible for the OTP;

(4) The addresses of the OTP and of each medication unit or other facility under the control of the OTP;

(5) The sources of funding for the OTP and the name and address of each governmental entity that provides such funding; and

(6) A statement that the OTP will comply with the conditions of certification set forth in paragraph (f) of this section.

(7) The application shall be signed by the program sponsor who shall certify that the information submitted in the application is truthful and accurate.

(c) *Action on application.* (1) Following SAMHSA's receipt of an application for certification of an OTP, and after consultation with the appropriate State authority regarding the qualifications of the applicant, SAMHSA may grant the application for certification, or renew an existing certification, if SAMHSA determines that the OTP has satisfied the requirements for certification or renewal of certification.

(2) SAMHSA may deny the application if SAMHSA determines that:

(i) The application for certification is deficient in any respect;

(ii) The OTP will not be operated in accordance with the Federal opioid treatment standards established under § 8.12;

(iii) The OTP will not permit an inspection or a survey to proceed, or will not permit in a timely manner access to relevant records or information; or

(iv) The OTP has made misrepresentations in obtaining accreditation or in applying for certification.

(3) Within 5 days after it reaches a final determination that an OTP meets the requirements for certification, SAMHSA will notify the Drug Enforcement Administration (DEA) that the OTP has been determined to be qualified to provide opioid treatment under section 303(g)(1) of the Controlled Substances Act.

(d) *Transitional certification.* OTPs that before May 18, 2001 were the subject of a current, valid approval by FDA under 21 CFR, part 291 (contained in the 21 CFR parts 200 to 299 edition, revised as of July 1, 2000), are deemed to be the subject of a current valid certification for purposes of paragraph (a)(11) of this section. Such ''transitional certification'' will expire on August 17, 2001 unless the OTP submits the information required by paragraph (b) of this section to SAMHSA on or before August 17, 2001. In addition to this application, OTPs must certify with a

written statement signed by the program sponsor, that they will apply for accreditation within 90 days of the date SAMHSA approves the second accreditation body. Transitional certification, in that case, will expire on May 19, 2003. SAMHSA may extend the transitional certification of an OTP for up to one additional year provided the OTP demonstrates that it has applied for accreditation, that an accreditation survey has taken place or is scheduled to take place, and that an accreditation decision is expected within a reasonable period of time (e.g., within 90 days from the date of survey). Transitional certification under this section may be suspended or revoked in accordance with §8.14.

(e) *Provisional certification.* (1) OTPs that have no current certification from SAMHSA, but have applied for accreditation with an accreditation body, are eligible to receive a provisional certification for up to 1 year. To receive a provisional certification, an OTP shall submit the information required by paragraph (b) of this section to SAMHSA along with a statement identifying the accreditation body to which the OTP has applied for accreditation, the date on which the OTP applied for accreditation, the dates of any accreditation surveys that have taken place or are expected to take place, and the expected schedule for completing the accreditation process. A provisional certification for up to 1 year will be granted, following receipt of the information described in this paragraph, unless SAMHSA determines that patient health would be adversely affected by the granting of provisional certification.

(2) An extension of provisional certification may be granted in extraordinary circumstances or otherwise to protect public health. To apply for a 90-day extension of provisional certification, an OTP shall submit to SAMHSA a statement explaining its efforts to obtain accreditation and a schedule for obtaining accreditation as expeditiously as possible.

(f) *Conditions for certification.* (1) OTPs shall comply with all pertinent State laws and regulations. Nothing in this part is intended to limit the authority of State and, as appropriate, local governmental entities to regulate the use of opioid drugs in the treatment of opioid addiction. The provisions of this section requiring compliance with requirements imposed by State law, or the submission of applications or reports required by the State authority, do not apply to OTPs operated directly by the Department of Veterans Affairs, the Indian Health Service, or any other department or agency of the United States. Federal agencies operating OTPs have agreed to cooperate voluntarily with State agencies by granting permission on an informal basis for designated State representatives to visit Federal OTPs and by furnishing a copy of Federal reports to the State authority, including the reports required under this section.

(2) OTPs shall allow, in accordance with Federal controlled substances laws and Federal confidentiality laws, inspections and surveys by duly authorized employees of SAMHSA, by accreditation bodies, by the DEA, and by authorized employees of any relevant State or Federal governmental authority.

(3) Disclosure of patient records maintained by an OTP is governed by the provisions of 42 CFR part 2, and every program must comply with that part. Records on the receipt, storage, and distribution of opioid agonist treatment medications are also subject to inspection under Federal controlled substances laws and under the Federal Food, Drug, and Cosmetic Act (21 U.S.C. 321 *et seq.*). Federally-sponsored treatment programs are subject to applicable Federal confidentiality statutes.

(4) A treatment program or medication unit or any part thereof, including any facility or any individual, shall permit a duly authorized employee of SAMHSA to have access to and to copy all records on the use of opioid drugs in accordance with the provisions of 42 CFR part 2.

(5) OTPs shall notify SAMHSA within 3 weeks of any replacement or other change in the status of the program sponsor or medical director.

(6) OTPs shall comply with all regulations enforced by the DEA under 21 CFR chapter II, and must be registered by the DEA before administering or

dispensing opioid agonist treatment medications.

(7) OTPs must operate in accordance with Federal opioid treatment standards and approved accreditation elements.

(g) *Conditions for interim maintenance treatment program approval.* (1) Before a public or nonprofit private OTP may provide interim maintenance treatment, the program must receive the approval of both SAMHSA and the chief public health officer of the State in which the OTP operates.

(2) Before SAMHSA may grant such approval, the OTP must provide SAMHSA with documentation from the chief public health officer of the State in which the OTP operates demonstrating that:

(i) Such officer does not object to the providing of interim maintenance treatment in the State;

(ii) The OTP seeking to provide such treatment is unable to place patients in a public or nonprofit private comprehensive treatment program within a reasonable geographic area within 14 days of the time patients seek admission to such programs;

(iii) The authorization of the OTP to provide interim maintenance treatment will not otherwise reduce the capacity of comprehensive maintenance treatment programs in the State to admit individuals (relative to the date on which such officer so certifies); and

(iv) The State certifies that each individual enrolled in interim maintenance treatment will be transferred to a comprehensive maintenance treatment program no later than 120 days from the date on which each individual first requested treatment, as provided in section 1923 of the Public Health Service Act (21 U.S.C. 300x-23).

(3) SAMHSA will provide notice to the OTP denying or approving the request to provide interim maintenance treatment. The OTP shall not provide such treatment until it has received such notice from SAMHSA.

(h) *Exemptions.* An OTP may, at the time of application for certification or any time thereafter, request from SAMHSA exemption from the regulatory requirements set forth under this section and § 8.12. An example of a case in which an exemption might be granted would be for a private practitioner who wishes to treat a limited number of patients in a non-metropolitan area with few physicians and no rehabilitative services geographically accessible and requests exemption from some of the staffing and service standards. The OTP shall support the rationale for the exemption with thorough documentation, to be supplied in an appendix to the initial application for certification or in a separate submission. SAMHSA will approve or deny such exemptions at the time of application, or any time thereafter, if appropriate. SAMHSA shall consult with the appropriate State authority prior to taking action on an exemption request.

(i) *Medication units, long-term care facilities and hospitals.* (1) Certified OTPs may establish medication units that are authorized to dispense opioid agonist treatment medications for observed ingestion. Before establishing a medication unit, a certified OTP must notify SAMHSA by submitting form SMA–162. The OTP must also comply with the provisions of 21 CFR part 1300 before establishing a medication unit. Medication units shall comply with all pertinent state laws and regulations.

(2) Certification as an OTP under this part will not be required for the maintenance or detoxification treatment of a patient who is admitted to a hospital or long-term care facility for the treatment of medical conditions other than opiate addiction and who requires maintenance or detoxification treatment during the period of his or her stay in that hospital or long-term care facility. The terms ''hospital'' and ''long-term care facility'' as used in this section are to have the meaning that is assigned under the law of the State in which the treatment is being provided. Nothing in this section is intended to relieve hospitals and long-term care facilities from the obligation to obtain registration from the Attorney General, as appropriate, under section 303(g) of the Controlled Substances Act.

[66 FR 4090, Jan. 17, 2001, as amended at 66 FR 15347, Mar. 19, 2001]

§ 8.12 Federal opioid treatment standards.

(a) *General.* OTPs must provide treatment in accordance with the standards in this section and must comply with these standards as a condition of certification.

(b) *Administrative and organizational structure.* An OTP's organizational structure and facilities shall be adequate to ensure quality patient care and to meet the requirements of all pertinent Federal, State, and local laws and regulations. At a minimum, each OTP shall formally designate a program sponsor and medical director. The program sponsor shall agree on behalf of the OTP to adhere to all requirements set forth in this part and any regulations regarding the use of opioid agonist treatment medications in the treatment of opioid addiction which may be promulgated in the future. The medical director shall assume responsibility for administering all medical services performed by the OTP. In addition, the medical director shall be responsible for ensuring that the OTP is in compliance with all applicable Federal, State, and local laws and regulations.

(c) *Continuous quality improvement.* (1) An OTP must maintain current quality assurance and quality control plans that include, among other things, annual reviews of program policies and procedures and ongoing assessment of patient outcomes.

(2) An OTP must maintain a current ''Diversion Control Plan'' or ''DCP'' as part of its quality assurance program that contains specific measures to reduce the possibility of diversion of controlled substances from legitimate treatment use and that assigns specific responsibility to the medical and administrative staff of the OTP for carrying out the diversion control measures and functions described in the DCP.

(d) *Staff credentials.* Each person engaged in the treatment of opioid addiction must have sufficient education, training, and experience, or any combination thereof, to enable that person to perform the assigned functions. All physicians, nurses, and other licensed professional care providers, including addiction counselors, must comply with the credentialing requirements of their respective professions.

(e) *Patient admission criteria*—(1) *Maintenance treatment.* An OTP shall maintain current procedures designed to ensure that patients are admitted to maintenance treatment by qualified personnel who have determined, using accepted medical criteria such as those listed in the Diagnostic and Statistical Manual for Mental Disorders (DSM-IV), that the person is currently addicted to an opioid drug, and that the person became addicted at least 1 year before admission for treatment. In addition, a program physician shall ensure that each patient voluntarily chooses maintenance treatment and that all relevant facts concerning the use of the opioid drug are clearly and adequately explained to the patient, and that each patient provides informed written consent to treatment.

(2) *Maintenance treatment for persons under age 18.* A person under 18 years of age is required to have had two documented unsuccessful attempts at short-term detoxification or drug-free treatment within a 12-month period to be eligible for maintenance treatment. No person under 18 years of age may be admitted to maintenance treatment unless a parent, legal guardian, or responsible adult designated by the relevant State authority consents in writing to such treatment.

(3) *Maintenance treatment admission exceptions.* If clinically appropriate, the program physician may waive the requirement of a 1-year history of addiction under paragraph (e)(1) of this section, for patients released from penal institutions (within 6 months after release), for pregnant patients (program physician must certify pregnancy), and for previously treated patients (up to 2 years after discharge).

(4) *Detoxification treatment.* An OTP shall maintain current procedures that are designed to ensure that patients are admitted to short- or long-term detoxification treatment by qualified personnel, such as a program physician, who determines that such treatment is appropriate for the specific patient by applying established diagnostic criteria. Patients with two or more unsuccessful detoxification episodes within a 12-month period must be

assessed by the OTP physician for other forms of treatment. A program shall not admit a patient for more than two detoxification treatment episodes in one year.

(f) *Required services.*(1) *General.* OTPs shall provide adequate medical, counseling, vocational, educational, and other assessment and treatment services. These services must be available at the primary facility, except where the program sponsor has entered into a formal, documented agreement with a private or public agency, organization, practitioner, or institution to provide these services to patients enrolled in the OTP. The program sponsor, in any event, must be able to document that these services are fully and reasonably available to patients.

(2) *Initial medical examination services.* OTPs shall require each patient to undergo a complete, fully documented physical evaluation by a program physician or a primary care physician, or an authorized healthcare professional under the supervision of a program physician, before admission to the OTP. The full medical examination, including the results of serology and other tests, must be completed within 14 days following admission.

(3) *Special services for pregnant patients.* OTPs must maintain current policies and procedures that reflect the special needs of patients who are pregnant. Prenatal care and other gender specific services or pregnant patients must be provided either by the OTP or by referral to appropriate healthcare providers.

(4) *Initial and periodic assessment services.* Each patient accepted for treatment at an OTP shall be assessed initially and periodically by qualified personnel to determine the most appropriate combination of services and treatment. The initial assessment must include preparation of a treatment plan that includes the patient's short-term goals and the tasks the patient must perform to complete the short-term goals; the patient's requirements for education, vocational rehabilitation, and employment; and the medical, psychosocial, economic, legal, or other supportive services that a patient needs. The treatment plan also must identify the frequency with which these services are to be provided. The plan must be reviewed and updated to reflect that patient's personal history, his or her current needs for medical, social, and psychological services, and his or her current needs for education, vocational rehabilitation, and employment services.

(5) *Counseling services.* (i) OTPs must provide adequate substance abuse counseling to each patient as clinically necessary. This counseling shall be provided by a program counselor, qualified by education, training, or experience to assess the psychological and sociological background of patients, to contribute to the appropriate treatment plan for the patient and to monitor patient progress.

(ii) OTPs must provide counseling on preventing exposure to, and the transmission of, human immunodeficiency virus (HIV) disease for each patient admitted or readmitted to maintenance or detoxification treatment.

(iii) OTPs must provide directly, or through referral to adequate and reasonably accessible community resources, vocational rehabilitation, education, and employment services for patients who either request such services or who have been determined by the program staff to be in need of such services.

(6) *Drug abuse testing services.* OTPs must provide adequate testing or analysis for drugs of abuse, including at least eight random drug abuse tests per year, per patient in maintenance treatment, in accordance with generally accepted clinical practice. For patients in short-term detoxification treatment, the OTP shall perform at least one initial drug abuse test. For patients receiving long-term detoxification treatment, the program shall perform initial and monthly random tests on each patient.

(g) *Recordkeeping and patient confidentiality.* (1) OTPs shall establish and maintain a recordkeeping system that is adequate to document and monitor patient care. This system is required to comply with all Federal and State reporting requirements relevant to opioid drugs approved for use in treatment of opioid addiction. All records are required to be kept confidential in

accordance with all applicable Federal and State requirements.

(2) OTPs shall include, as an essential part of the recordkeeping system, documentation in each patient's record that the OTP made a good faith effort to review whether or not the patient is enrolled any other OTP. A patient enrolled in an OTP shall not be permitted to obtain treatment in any other OTP except in exceptional circumstances. If the medical director or program physician of the OTP in which the patient is enrolled determines that such exceptional circumstances exist, the patient may be granted permission to seek treatment at another OTP, provided the justification for finding exceptional circumstances is noted in the patient's record both at the OTP in which the patient is enrolled and at the OTP that will provide the treatment.

(h) *Medication administration, dispensing, and use.* (1) OTPs must ensure that opioid agonist treatment medications are administered or dispensed only by a practitioner licensed under the appropriate State law and registered under the appropriate State and Federal laws to administer or dispense opioid drugs, or by an agent of such a practitioner, supervised by and under the order of the licensed practitioner. This agent is required to be a pharmacist, registered nurse, or licensed practical nurse, or any other healthcare professional authorized by Federal and State law to administer or dispense opioid drugs.

(2) OTPs shall use only those opioid agonist treatment medications that are approved by the Food and Drug Administration under section 505 of the Federal Food, Drug, and Cosmetic Act (21 U.S.C. 355) for use in the treatment of opioid addiction. In addition, OTPs who are fully compliant with the protocol of an investigational use of a drug and other conditions set forth in the application may administer a drug that has been authorized by the Food and Drug Administration under an investigational new drug application under section 505(i) of the Federal Food, Drug, and Cosmetic Act for investigational use in the treatment of opioid addiction. Currently the following opioid agonist treatment medications will be considered to be approved by the Food and Drug Administration for use in the treatment of opioid addiction:

(i) Methadone;

(ii) Levomethadyl acetate (LAAM); and

(iii) Buprenorphine and buprenorphine combination products that have been approved for use in the treatment of opioid addiction.

(3) OTPs shall maintain current procedures that are adequate to ensure that the following dosage form and initial dosing requirements are met:

(i) Methadone shall be administered or dispensed only in oral form and shall be formulated in such a way as to reduce its potential for parenteral abuse.

(ii) For each new patient enrolled in a program, the initial dose of methadone shall not exceed 30 milligrams and the total dose for the first day shall not exceed 40 milligrams, unless the program physician documents in the patient's record that 40 milligrams did not suppress opiate abstinence symptoms.

(4) OTPs shall maintain current procedures adequate to ensure that each opioid agonist treatment medication used by the program is administered and dispensed in accordance with its approved product labeling. Dosing and administration decisions shall be made by a program physician familiar with the most up-to-date product labeling. These procedures must ensure that any significant deviations from the approved labeling, including deviations with regard to dose, frequency, or the conditions of use described in the approved labeling, are specifically documented in the patient's record.

(i) *Unsupervised or ''take-home'' use.* To limit the potential for diversion of opioid agonist treatment medications to the illicit market, opioid agonist treatment medications dispensed to patients for unsupervised use shall be subject to the following requirements.

(1) Any patient in comprehensive maintenance treatment may receive a single take-home dose for a day that the clinic is closed for business, including Sundays and State and Federal holidays.

(2) Treatment program decisions on dispensing opioid treatment medications to patients for unsupervised use

beyond that set forth in paragraph (i)(1) of this section, shall be determined by the medical director. In determining which patients may be permitted unsupervised use, the medical director shall consider the following take-home criteria in determining whether a patient is responsible in handling opioid drugs for unsupervised use.

(i) Absence of recent abuse of drugs (opioid or nonnarcotic), including alcohol;

(ii) Regularity of clinic attendance;

(iii) Absence of serious behavioral problems at the clinic;

(iv) Absence of known recent criminal activity, e.g., drug dealing;

(v) Stability of the patient's home environment and social relationships;

(vi) Length of time in comprehensive maintenance treatment;

(vii) Assurance that take-home medication can be safely stored within the patient's home; and

(viii) Whether the rehabilitative benefit the patient derived from decreasing the frequency of clinic attendance outweighs the potential risks of diversion.

(3) Such determinations and the basis for such determinations consistent with the criteria outlined in paragraph (i)(2) of this section shall be documented in the patient's medical record. If it is determined that a patient is responsible in handling opioid drugs, the following restrictions apply:

(i) During the first 90 days of treatment, the take-home supply (beyond that of paragraph (i)(1) of this section) is limited to a single dose each week and the patient shall ingest all other doses under appropriate supervision as provided for under the regulations in this subpart.

(ii) In the second 90 days of treatment, the take-home supply (beyond that of paragraph (i)(1) of this section) is two doses per week.

(iii) In the third 90 days of treatment, the take-home supply (beyond that of paragraph (i)(1) of this section) is three doses per week.

(iv) In the remaining months of the first year, a patient may be given a maximum 6-day supply of take-home medication.

(v) After 1 year of continuous treatment, a patient may be given a maximum 2-week supply of take-home medication.

(vi) After 2 years of continuous treatment, a patient may be given a maximum one-month supply of take-home medication, but must make monthly visits.

(4) No medications shall be dispensed to patients in short-term detoxification treatment or interim maintenance treatment for unsupervised or take-home use.

(5) OTPs must maintain current procedures adequate to identify the theft or diversion of take-home medications, including labeling containers with the OTP's name, address, and telephone number. Programs also must ensure that take-home supplies are packaged in a manner that is designed to reduce the risk of accidental ingestion, including child-proof containers (see Poison Prevention Packaging Act, Public Law 91–601 (15 U.S.C. 1471 *et seq.*)).

(j) *Interim maintenance treatment.* (1) The program sponsor of a public or nonprofit private OTP may place an individual, who is eligible for admission to comprehensive maintenance treatment, in interim maintenance treatment if the individual cannot be placed in a public or nonprofit private comprehensive program within a reasonable geographic area and within 14 days of the individual's application for admission to comprehensive maintenance treatment. An initial and at least two other urine screens shall be taken from interim patients during the maximum of 120 days permitted for such treatment. A program shall establish and follow reasonable criteria for establishing priorities for transferring patients from interim maintenance to comprehensive maintenance treatment. These transfer criteria shall be in writing and shall include, at a minimum, a preference for pregnant women in admitting patients to interim maintenance and in transferring patients from interim maintenance to comprehensive maintenance treatment. Interim maintenance shall be provided in a manner consistent with all applicable Federal and State laws, including sections 1923, 1927(a), and 1976 of the Public Health Service Act (21 U.S.C. 300x–23, 300x–27(a), and 300y–11).

(2) The program shall notify the State health officer when a patient begins interim maintenance treatment, when a patient leaves interim maintenance treatment, and before the date of mandatory transfer to a comprehensive program, and shall document such notifications.

(3) SAMHSA may revoke the interim maintenance authorization for programs that fail to comply with the provisions of this paragraph (j). Likewise, SAMHSA will consider revoking the interim maintenance authorization of a program if the State in which the program operates is not in compliance with the provisions of §8.11(g).

(4) All requirements for comprehensive maintenance treatment apply to interim maintenance treatment with the following exceptions:

(i) The opioid agonist treatment medication is required to be administered daily under observation;

(ii) Unsupervised or ''take-home'' use is not allowed;

(iii) An initial treatment plan and periodic treatment plan evaluations are not required;

(iv) A primary counselor is not required to be assigned to the patient;

(v) Interim maintenance cannot be provided for longer than 120 days in any 12-month period; and

(vi) Rehabilitative, education, and other counseling services described in paragraphs (f)(4), (f)(5)(i), and (f)(5)(iii) of this section are not required to be provided to the patient.

[66 FR 4090, Jan. 17, 2001, as amended at 68 FR 27939, May 22, 2003]

§8.13 Revocation of accreditation and accreditation body approval.

(a) *SAMHSA action following revocation of accreditation.* If an accreditation body revokes an OTP's accreditation, SAMHSA may conduct an investigation into the reasons for the revocation. Following such investigation, SAMHSA may determine that the OTP's certification should no longer be in effect, at which time SAMHSA will initiate procedures to revoke the facility's certification in accordance with §8.14. Alternatively, SAMHSA may determine that another action or combination of actions would better serve the public health, including the establishment and implementation of a corrective plan of action that will permit the certification to continue in effect while the OTP seeks reaccreditation.

(b) *Accreditation body approval.* (1) If SAMHSA withdraws the approval of an accreditation body under §8.6, the certifications of OTPs accredited by such body shall remain in effect for a period of 1 year after the date of withdrawal of approval of the accreditation body, unless SAMHSA determines that to protect public health or safety, or because the accreditation body fraudulently accredited treatment programs, the certifications of some or all of the programs should be revoked or suspended or that a shorter time period should be established for the certifications to remain in effect. SAMHSA may extend the time in which a certification remains in effect under this paragraph on a case-by-case basis.

(2) Within 1 year from the date of withdrawal of approval of an accreditation body, or within any shorter period of time established by SAMHSA, OTPs currently accredited by the accreditation body must obtain accreditation from another accreditation body. SAMHSA may extend the time period for obtaining reaccreditation on a case-by-case basis.

§8.14 Suspension or revocation of certification.

(a) *Revocation.* Except as provided in paragraph (b) of this section, SAMHSA may revoke the certification of an OTP if SAMHSA finds, after providing the program sponsor with notice and an opportunity for a hearing in accordance with subpart C of this part, that the program sponsor, or any employee of the OTP:

(1) Has been found guilty of misrepresentation in obtaining the certification;

(2) Has failed to comply with the Federal opioid treatment standards in any respect;

(3) Has failed to comply with reasonable requests from SAMHSA or from an accreditation body for records, information, reports, or materials that are necessary to determine the continued eligibility of the OTP for certification or continued compliance with the Federal opioid treatment standards; or

(4) Has refused a reasonable request of a duly designated SAMHSA inspector, Drug Enforcement Administration (DEA) Inspector, State Inspector, or accreditation body representative for permission to inspect the program or the program's operations or its records.

(b) *Suspension*. Whenever SAMHSA has reason to believe that revocation may be required and that immediate action is necessary to protect public health or safety, SAMHSA may immediately suspend the certification of an OTP before holding a hearing under subpart C of this part. SAMHSA may immediately suspend as well as propose revocation of the certification of an OTP before holding a hearing under subpart C of this part if SAMHSA makes a finding described in paragraph (a) of this section and also determines that:

(1) The failure to comply with the Federal opioid treatment standards presents an imminent danger to the public health or safety;

(2) The refusal to permit inspection makes immediate suspension necessary; or

(3) There is reason to believe that the failure to comply with the Federal opioid treatment standards was intentional or was associated with fraud.

(c) *Written notification*. In the event that SAMHSA suspends the certification of an OTP in accordance with paragraph (b) of this section or proposes to revoke the certification of an OTP in accordance with paragraph (a) of this section, SAMHSA shall promptly provide the sponsor of the OTP with written notice of the suspension or proposed revocation by facsimile transmission, personal service, commercial overnight delivery service, or certified mail, return receipt requested. Such notice shall state the reasons for the action and shall state that the OTP may seek review of the action in accordance with the procedures in subpart C of this part.

(d)(1) If SAMHSA suspends certification in accordance with paragraph (b) of this section:

(i) SAMHSA will immediately notify DEA that the OTP's registration should be suspended under 21 U.S.C. 824(d); and

(ii) SAMHSA will provide an opportunity for a hearing under subpart C of this part.

(2) Suspension of certification under paragraph (b) of this section shall remain in effect until the agency determines that:

(i) The basis for the suspension cannot be substantiated;

(ii) Violations of required standards have been corrected to the agency's satisfaction; or

(iii) The OTP's certification shall be revoked.

§ 8.15 Forms.

(a) SMA–162—Application for Certification to Use Opioid Agonist Treatment Medications for Opioid Treatment.

(b) SMA–163—Application for Becoming an Accreditation Body under § 8.3.

Subpart C—Procedures for Review of Suspension or Proposed Revocation of OTP Certification, and of Adverse Action Regarding Withdrawal of Approval of an Accreditation Body

§ 8.21 Applicability.

The procedures in this subpart apply when:

(a) SAMHSA has notified an OTP in writing that its certification under the regulations in subpart B of this part has been suspended or that SAMHSA proposes to revoke the certification; and

(b) The OTP has, within 30 days of the date of the notification or within 3 days of the date of the notification when seeking an expedited review of a suspension, requested in writing an opportunity for a review of the suspension or proposed revocation.

(c) SAMHSA has notified an accreditation body of an adverse action taken regarding withdrawal of approval of the accreditation body under the regulations in subpart A of this part; and

(d) The accreditation body has, within 30 days of the date of the notification, requested in writing an opportunity for a review of the adverse action.

§ 8.22 Definitions.

The following definitions apply to this subpart C.

(a) *Appellant* means:

(1) The treatment program which has been notified of its suspension or proposed revocation of its certification under the regulations of this part and has requested a review of the suspension or proposed revocation, or

(2) The accreditation body which has been notified of adverse action regarding withdrawal of approval under the regulations of this subpart and has requested a review of the adverse action.

(b) *Respondent* means SAMHSA.

(c) *Reviewing official* means the person or persons designated by the Secretary who will review the suspension or proposed revocation. The reviewing official may be assisted by one or more HHS officers or employees or consultants in assessing and weighing the scientific and technical evidence and other information submitted by the appellant and respondent on the reasons for the suspension and proposed revocation.

§ 8.23 Limitation on issues subject to review.

The scope of review shall be limited to the facts relevant to any suspension, or proposed revocation, or adverse action, the necessary interpretations of the facts the regulations, in the subpart, and other relevant law.

§ 8.24 Specifying who represents the parties.

The appellant's request for review shall specify the name, address, and phone number of the appellant's representative. In its first written submission to the reviewing official, the respondent shall specify the name, address, and phone number of the respondent's representative.

§ 8.25 Informal review and the reviewing official's response.

(a) *Request for review.* Within 30 days of the date of the notice of the suspension or proposed revocation, the appellant must submit a written request to the reviewing official seeking review, unless some other time period is agreed to by the parties. A copy must also be sent to the respondent. The request for review must include a copy of the notice of suspension, proposed revocation, or adverse action, a brief statement of why the decision to suspend, propose revocation, or take an adverse action is incorrect, and the appellant's request for an oral presentation, if desired.

(b) *Acknowledgment.* Within 5 days after receiving the request for review, the reviewing official will send an acknowledgment and advise the appellant of the next steps. The reviewing official will also send a copy of the acknowledgment to the respondent.

§ 8.26 Preparation of the review file and written arguments.

The appellant and the respondent each participate in developing the file for the reviewing official and in submitting written arguments. The procedures for development of the review file and submission of written argument are:

(a) *Appellant's documents and brief.* Within 30 days after receiving the acknowledgment of the request for review, the appellant shall submit to the reviewing official the following (with a copy to the respondent):

(1) A review file containing the documents supporting appellant's argument, tabbed and organized chronologically, and accompanied by an index identifying each document. Only essential documents should be submitted to the reviewing official.

(2) A written statement, not to exceed 20 double-spaced pages, explaining why respondent's decision to suspend or propose revocation of appellant's certification or to take adverse action regarding withdrawal of approval of the accreditation body is incorrect (appellant's brief).

(b) *Respondent's documents and brief.* Within 30 days after receiving a copy of the acknowledgment of the request for review, the respondent shall submit to the reviewing official the following (with a copy to the appellant):

(1) A review file containing documents supporting respondent's decision to suspend or revoke appellant's certification, or approval as an accreditation body, tabbed and organized chronologically, and accompanied by an index identifying each document. Only

essential documents should be submitted to the reviewing official.

(2) A written statement, not exceeding 20 double-spaced pages in length, explaining the basis for suspension, proposed revocation, or adverse action (respondent's brief).

(c) *Reply briefs.* Within 10 days after receiving the opposing party's submission, or 20 days after receiving acknowledgment of the request for review, whichever is later, each party may submit a short reply not to exceed 10 double-spaced pages.

(d) *Cooperative efforts.* Whenever feasible, the parties should attempt to develop a joint review file.

(e) *Excessive documentation.* The reviewing official may take any appropriate steps to reduce excessive documentation, including the return of or refusal to consider documentation found to be irrelevant, redundant, or unnecessary.

(f) *Discovery.* The use of interrogatories, depositions, and other forms of discovery shall not be allowed.

§ 8.27 Opportunity for oral presentation.

(a) *Electing oral presentation.* If an opportunity for an oral presentation is desired, the appellant shall request it at the time it submits its written request for review to the reviewing official. The reviewing official will grant the request if the official determines that the decisionmaking process will be substantially aided by oral presentations and arguments. The reviewing official may also provide for an oral presentation at the official's own initiative or at the request of the respondent.

(b) *Presiding official.* The reviewing official or designee will be the presiding official responsible for conducting the oral presentation.

(c) *Preliminary conference.* The presiding official may hold a prehearing conference (usually a telephone conference call) to consider any of the following: Simplifying and clarifying issues; stipulations and admissions; limitations on evidence and witnesses that will be presented at the hearing; time allotted for each witness and the hearing altogether; scheduling the hearing; and any other matter that will assist in the review process. Normally, this conference will be conducted informally and off the record; however, the presiding official may, at the presiding official's discretion, produce a written document summarizing the conference or transcribe the conference, either of which will be made a part of the record.

(d) *Time and place of oral presentation.* The presiding official will attempt to schedule the oral presentation within 45 days of the date appellant's request for review is received or within 15 days of submission of the last reply brief, whichever is later. The oral presentation will be held at a time and place determined by the presiding official following consultation with the parties.

(e) *Conduct of the oral presentation*—(1) *General.* The presiding official is responsible for conducting the oral presentation. The presiding official may be assisted by one or more HHS officers or employees or consultants in conducting the oral presentation and reviewing the evidence. While the oral presentation will be kept as informal as possible, the presiding official may take all necessary steps to ensure an orderly proceeding.

(2) *Burden of proof/standard of proof.* In all cases, the respondent bears the burden of proving by a preponderance of the evidence that its decision to suspend, propose revocation, or take adverse action is appropriate. The appellant, however, has a responsibility to respond to the respondent's allegations with evidence and argument to show that the respondent is incorrect.

(3) *Admission of evidence.* The rules of evidence do not apply and the presiding official will generally admit all testimonial evidence unless it is clearly irrelevant, immaterial, or unduly repetitious. Each party may make an opening and closing statement, may present witnesses as agreed upon in the prehearing conference or otherwise, and may question the opposing party's witnesses. Since the parties have ample opportunity to prepare the review file, a party may introduce additional documentation during the oral presentation only with the permission of the presiding official. The presiding official may question witnesses directly and

take such other steps necessary to ensure an effective and efficient consideration of the evidence, including setting time limitations on direct and cross-examinations.

(4) *Motions*. The presiding official may rule on motions including, for example, motions to exclude or strike redundant or immaterial evidence, motions to dismiss the case for insufficient evidence, or motions for summary judgment. Except for those made during the hearing, all motions and opposition to motions, including argument, must be in writing and be no more than 10 double-spaced pages in length. The presiding official will set a reasonable time for the party opposing the motion to reply.

(5) *Transcripts*. The presiding official shall have the oral presentation transcribed and the transcript shall be made a part of the record. Either party may request a copy of the transcript and the requesting party shall be responsible for paying for its copy of the transcript.

(f) *Obstruction of justice or making of false statements*. Obstruction of justice or the making of false statements by a witness or any other person may be the basis for a criminal prosecution under 18 U.S.C. 1001 or 1505.

(g) *Post-hearing procedures*. At the presiding official's discretion, the presiding official may require or permit the parties to submit post-hearing briefs or proposed findings and conclusions. Each party may submit comments on any major prejudicial errors in the transcript.

§ 8.28 Expedited procedures for review of immediate suspension.

(a) *Applicability*. When the Secretary notifies a treatment program in writing that its certification has been immediately suspended, the appellant may request an expedited review of the suspension and any proposed revocation. The appellant must submit this request in writing to the reviewing official within 10 days of the date the OTP received notice of the suspension. The request for review must include a copy of the suspension and any proposed revocation, a brief statement of why the decision to suspend and propose revocation is incorrect, and the appellant's request for an oral presentation, if desired. A copy of the request for review must also be sent to the respondent.

(b) *Reviewing official's response*. As soon as practicable after the request for review is received, the reviewing official will send an acknowledgment with a copy to the respondent.

(c) *Review file and briefs*. Within 10 days of the date the request for review is received, but no later than 2 days before an oral presentation, each party shall submit to the reviewing official the following:

(1) A review file containing essential documents relevant to the review, tabbed, indexed, and organized chronologically; and

(2) A written statement, not to exceed 20 double-spaced pages, explaining the party's position concerning the suspension and any proposed revocation. No reply brief is permitted.

(d) *Oral presentation*. If an oral presentation is requested by the appellant or otherwise granted by the reviewing official in accordance with § 8.27(a), the presiding official will attempt to schedule the oral presentation within 20 to 30 days of the date of appellant's request for review at a time and place determined by the presiding official following consultation with the parties. The presiding official may hold a pre-hearing conference in accordance with § 8.27(c) and will conduct the oral presentation in accordance with the procedures of §§ 8.27(e), (f), and (g).

(e) *Written decision*. The reviewing official shall issue a written decision upholding or denying the suspension or proposed revocation and will attempt to issue the decision within 7 to 10 days of the date of the oral presentation or within 3 days of the date on which the transcript is received or the date of the last submission by either party, whichever is later. All other provisions set forth in § 8.33 apply.

(f) *Transmission of written communications*. Because of the importance of timeliness for these expedited procedures, all written communications between the parties and between either party and the reviewing official shall be sent by facsimile transmission, personal service, or commercial overnight delivery service.

§ 8.29 Ex parte communications.

Except for routine administrative and procedural matters, a party shall not communicate with the reviewing or presiding official without notice to the other party.

§ 8.30 Transmission of written communications by reviewing official and calculation of deadlines.

(a) *Timely review*. Because of the importance of a timely review, the reviewing official should normally transmit written communications to either party by facsimile transmission, personal service, or commercial overnight delivery service, or certified mail, return receipt requested, in which case the date of transmission or day following mailing will be considered the date of receipt. In the case of communications sent by regular mail, the date of receipt will be considered 3 days after the date of mailing.

(b) *Due date*. In counting days, include Saturdays, Sundays, and holidays. However, if a due date falls on a Saturday, Sunday, or Federal holiday, then the due date is the next Federal working day.

§ 8.31 Authority and responsibilities of the reviewing official.

In addition to any other authority specified in this subpart C, the reviewing official and the presiding official, with respect to those authorities involving the oral presentation, shall have the authority to issue orders; examine witnesses; take all steps necessary for the conduct of an orderly hearing; rule on requests and motions; grant extensions of time for good reasons; dismiss for failure to meet deadlines or other requirements; order the parties to submit relevant information or witnesses; remand a case for further action by the respondent; waive or modify these procedures in a specific case, usually with notice to the parties; reconsider a decision of the reviewing official where a party promptly alleges a clear error of fact or law; and to take any other action necessary to resolve disputes in accordance with the objectives of the procedures in this subpart.

§ 8.32 Administrative record.

The administrative record of review consists of the review file; other submissions by the parties; transcripts or other records of any meetings, conference calls, or oral presentation; evidence submitted at the oral presentation; and orders and other documents issued by the reviewing and presiding officials.

§ 8.33 Written decision.

(a) *Issuance of decision*. The reviewing official shall issue a written decision upholding or denying the suspension, proposed revocation, or adverse action. The decision will set forth the reasons for the decision and describe the basis for that decision in the record. Furthermore, the reviewing official may remand the matter to the respondent for such further action as the reviewing official deems appropriate.

(b) *Date of decision*. The reviewing official will attempt to issue the decision within 15 days of the date of the oral presentation, the date on which the transcript is received, or the date of the last submission by either party, whichever is later. If there is no oral presentation, the decision will normally be issued within 15 days of the date of receipt of the last reply brief. Once issued, the reviewing official will immediately communicate the decision to each party.

(c) *Public notice and communications to the Drug Enforcement Administration (DEA)*. (1) If the suspension and proposed revocation of OTP certification are upheld, the revocation of certification will become effective immediately and the public will be notified by publication of a notice in the FEDERAL REGISTER. SAMHSA will notify DEA within 5 days that the OTP's registration should be revoked.

(2) If the suspension and proposed revocation of OTP certification are denied, the revocation will not take effect and the suspension will be lifted immediately. Public notice will be given by publication in the FEDERAL REGISTER. SAMHSA will notify DEA within 5 days that the OTP's registration should be restored, if applicable.

§8.34 Court review of final administrative action; exhaustion of administrative remedies.

Before any legal action is filed in court challenging the suspension, proposed revocation, or adverse action, respondent shall exhaust administrative remedies provided under this subpart, unless otherwise provided by Federal law. The reviewing official's decision, under §8.28(e) or §8.33(a), constitutes final agency action as of the date of the decision.

PART 9—STANDARDS OF CARE FOR CHIMPANZEES HELD IN THE FEDERALLY SUPPORTED SANCTUARY SYSTEM

Sec.
9.1 Applicability and purpose.
9.2 Definitions.
9.3 Sanctuary policies and responsibilities.
9.4 Physical facility policies and design.
9.5 Chimpanzee ownership, fees, and studies.
9.6 Animal care, well-being, husbandry, veterinary care, and euthanasia.
9.7 Reproduction.
9.8 Animal records.
9.9 Facility staffing.
9.10 Occupational Health and Safety Program (OHSP) and biosafety requirements.
9.11 Animal transport.
9.12 Compliance with the Standards of Care, USDA and PHS policies and regulations.
9.13 Other federal laws, regulations, and statutes that apply to this part.

AUTHORITY: 42 U.S.C. 216, 287a–3a.

SOURCE: 73 FR 60423, Oct. 10, 2008, unless otherwise noted.

§9.1 Applicability and purpose.

(a) *General.* The standards of care set forth in this part apply to the chimpanzee sanctuaries that are contracted (or subcontracted) to the Federal Government to operate the federally supported chimpanzee sanctuary system authorized by section 481C of the Public Health Service (PHS) Act, as amended (42 U.S.C. 287a–3a).

(b) *What is the purpose of the federally supported chimpanzee sanctuary system and the authority for establishing these standards of care regulation?* The Chimpanzee Health Improvement, Maintenance, and Protection Act (Pub. L. 106–551, referred to as the ''CHIMP Act'' or ''Chimpanzee Retirement Act'') was enacted by Congress to provide for the establishment and operation of a sanctuary system to provide lifetime care for chimpanzees that have been used, or were bred or purchased for use, in research conducted or supported by the agencies of the Federal Government, and that are determined to be no longer needed for such research. The CHIMP Act also mandates that standards of care for chimpanzees in the sanctuary shall be developed to ensure the well-being of chimpanzees and the health and safety of the chimpanzees.

(c) *To what chimpanzee sanctuaries do the standards of care in this part apply?* The standards of care set forth in this part apply to only those sanctuaries that are contracted or subcontracted to the Federal Government to operate the federally supported chimpanzee sanctuary system.

§9.2 Definitions.

As used in this part:

Adequate veterinary care means a program directed by a veterinarian qualified through training and/or experience to provide professional medical care to the chimpanzees within the Sanctuary and with the appropriate authority to provide this care. The program also provides guidance to all caregivers on all matters relating to the health and well-being of the chimpanzees.

American Zoo and Aquarium Association (AZA) means the professional society composed of individuals with various backgrounds and interests that are devoted to advancing the knowledge and understanding of zoo animals and the management of zoos in the United States.

American Zoo and Aquarium Association (AZA) Accreditation Standards are those standards developed by the AZA that are used to review, evaluate, and accredit zoos or zoological gardens. These standards cover a variety of areas including facilities, policies and procedures, training, staff qualifications, medical and animal care, husbandry and well-being procedures, and conservation, along with other specific areas.

Animal Care and Use Committee means the Institutional Animal Care and Use Committee established under section 13(b) of the Animal Welfare Act of 1985

and the Health Research Extension Act of 1985. For the purpose of these Standards of Care, it shall consist of at least five (5) members including the Chairperson, a Doctor of Veterinary Medicine (D.V.M. or V.M.D.) knowledgeable in nonhuman primate care and diseases and with delegated program responsibility, a member not affiliated with the Sanctuary, a scientist, and a member of the animal protection community. The requirement that a member of the ACUC must be from an animal protection organization is unique to this part and is not required under the Animal Welfare Regulations or the Public Health Service Policy on the Humane Care and Use of Laboratory Animals. This Committee must be established if research as defined by the Animal Welfare Act Regulations and the Public Health Service Policy (research, teaching, testing, exhibition) is to be conducted at the sanctuary.

Animal protection organization means a nonprofit organization whose primary mission is protection of animals through positive advocacy and action.

Animal Resource Manager (or Animal Resource Supervisor) means the individual employee responsible for managing the nonprofessional staff providing care for the chimpanzees at the sanctuary. This individual may perform other duties as assigned by the Sanctuary Contractor.

Animal Welfare Act/Regulations means the Act of August 24, 1966 (Pub. L. 89–544, commonly known as the Laboratory Animal Welfare Act), as amended by the Act of December 24, 1970 (Pub. L. 91–579, the Animal Welfare Act of 1970), the Act of April 22, 1976 (Pub. L. 94–279, the Animal Welfare Act of 1976), and the Act of December 23, 1985 (Pub. L. 99–198, the Food Security Act of 1985), and as may be subsequently amended, and the United States Department of Agriculture (USDA) regulations implementing the Animal Welfare Act in title 9, chapter 1, subchapter A of the CFR.

Animal Welfare Assurance means the documentation from an institution assuring compliance with the PHS Policy on Humane Care and Use of Laboratory Animals. This policy is administered by the Office of Laboratory Animal Welfare (OLAW), National Institutes of Health.

Association for Assessment and Accreditation of Laboratory Animal Care, International (AAALAC) means the nonprofit organization that is recognized in the United States and abroad as being the body responsible for the accreditation of laboratory animal programs.

Behaviorist means a person hired by the sanctuary to administer or oversee the enrichment and behavioral program for the chimpanzees at the sanctuary. This individual must be qualified through training or experience.

Biosafety Officer means the individual responsible for establishing and monitoring workplace safety procedures designed to minimize or prevent injury or loss due to biohazards in accordance with policies established by the sanctuary administration.

Board of Directors (BOD) means the individuals selected by the Contractor to govern the nonprofit institution responsible for operating the federally supported chimpanzee Sanctuary system. The board members must meet the qualifications and criteria stated in the CHIMP Act.

Chair of the Board of Directors means the individual chosen by the BOD or other legally empowered entity to carry out such action, who is responsible for chairing meetings and acting on behalf of the board. This individual reports directly to the Board.

Chief Executive Officer (CEO) means the principal person responsible for overall accomplishment of the mission of the chimpanzee sanctuary.

CHIMP Act means the Chimpanzee Health Improvement, Maintenance, and Protection Act of December 20, 2000 (Pub. L. 106–551) commonly known as the ''CHIMP Act'' or ''Chimpanzee Retirement Act,'' and any future amendments.

Chimpanzee means a member of *Pan troglodytes*. It excludes the pygmy chimpanzee (*Pan paniscus* or bonobo).

Chimpanzee caregivers (caregivers) mean all sanctuary technical and husbandry staff providing long-term care and services for the chimpanzees.

Contractor/Primary Contractor/Sanctuary Contractor means the nonprofit

entity awarded a contract by the Federal Government to establish and operate the chimpanzee sanctuary system.

Euthanasia means the humane death of a chimpanzee accomplished by a method that produces rapid unconsciousness and subsequent death without evidence of pain or distress. The method must be consistent with the recommendations of the American Veterinary Medical Association Panel on Euthanasia.

Exhibition means exhibiting chimpanzees to the public for compensation. This definition excludes limited viewing for educational purposes that are not disruptive to the chimpanzees.

Facility director means the individual responsible for directing the overall activities at the Sanctuary site.

Facility Veterinarian means a person who has graduated from a veterinary school accredited by the American Veterinary Medical Association (AVMA) Council on Education, or who has a certificate issued by the AVMA's Education Commission for Foreign Veterinary Graduates; has training and/or experience in the care and management of nonhuman primates; and has direct or delegated authority for activities involving chimpanzees at the federally funded chimpanzee sanctuary.

Federal Acquisition Regulations (FAR) means the codified rules applicable to contracts, specifically those sections of the FAR (48 CFR chapter 1, part 52) that are applicable to contracts between the Federal Government and a contractor (in this case a private, nonprofit entity under contract to operate the chimpanzee sanctuary system).

Federal agency means an executive agency as such term is defined in section 105 of title 5, United States Code, and refers to the agency from which the research facility receives a Federal award for projects involving animals.

Federally owned chimpanzees mean chimpanzees that have been purchased by, bred by, or donated to a federal agency for use in biomedical/behavioral research. Chimpanzees whose ownership was subsequently transferred from Federal ownership via written transfer agreements are no longer federally owned.

Guide means *The Guide for the Care and Use of Laboratory Animals*, published by the National Academy of Sciences, Institute for Laboratory Animal Research of the National Research Council, 1996, International Standard Book Number 0–309–05377–3.

Housing facility means any land, premises, shed, barn, building, trailer, or other structure or area housing intended to house chimpanzees.

Indoor housing facility refers to any structure or enclosure (for example, cages, pens, rooms) for maintaining animals in a controlled environment that provides for normal physiological and behavioral needs.

Interstate air transport live animals (IATA) regulations means those regulations and standards covering the air transportation of nonhuman primates developed and implemented by the International Air Transportation Association.

Invasive research (studies) utilizes those procedures that cause more than momentary pain, distress, fear, discomfort, injury, or other negative modalities to a chimpanzee. Any procedure that enters or exposes a body cavity is considered to be invasive. Sanctuary chimpanzees may not be used in invasive research. This definition excludes any invasive procedure that is a part of veterinary, medical, or surgical care that is performed by or under the direction of the Sanctuary Veterinarian using acceptable veterinary practices. Some examples of invasive studies are:

(1) Experimental exposure to a substance that may be detrimental to a chimpanzee's health (e.g., infectious disease, radiation). This does not include accidental exposures to infectious diseases transmitted from cage mates or from radiation or other exposures at the time of regularly scheduled or necessary veterinary examinations and treatments;

(2) Any invasion of a body cavity;

(3) Surgery and surgical implantation of devices that are not a part of a veterinary medical treatment or colony management purposes.

(4) Behavioral studies that cause distress or discomfort, such as induction of a fear response;

(5) Testing of any drug;

(6) Purposeful manipulation of social groups or the removal from their social

group or addition of individuals in order to conduct behavioral research (for example, on aggression). Creation and refinement of social groups will be necessary when the animals arrive at the Sanctuary and this should take place only when necessary in regards to colony management and should not be driven by independently initiated research studies;

(7) Restraint unless it is in conjunction with the annual exam or clinical care; and

(8) Darting or anesthesia induction other than at annual exam or in the case of an emergency in which the chimpanzee's well-being is at stake.

National Primate Research Center (NPRC) means those centers supported by the National Center for Research Resources, National Institutes of Health, Department of Health and Human Services, as national resources for providing high-quality nonhuman primate research resources and facilities. As of June 2007, there were eight such centers.

National Research Council means the component of the National Academy of Sciences that advises the Federal Government on matters related to science, research, and research resources.

Nonfederally owned chimpanzees mean chimpanzees that have not been purchased by, bred by, or donated to the Federal Government for use in federally supported research projects. In accordance with the CHIMP Act, chimpanzees owned on the date of passage of the CHIMP Act by a National Primate Research Center may enter the sanctuary system without requiring the NPRC to pay a fee. Offspring born in the sanctuary is owned by the Sanctuary Contractor.

Noninvasive research (studies) means the use of procedures that depend upon close observation of chimpanzee behavior or on medical information collected during the course of normal veterinary care. These procedures do not require removal of the chimpanzees from their social group or environment, or require a separate anesthetic or sedation event to collect data or record observations. Some examples of noninvasive studies are:

(1) Visual observation;

(2) Behavioral studies designed to improve the establishment and maintenance of social groups. These activities may cause stress as a result of novel interactions between chimpanzees and caregivers, but they are not considered invasive as long as they are intended to maximize the well-being of the chimpanzees;

(3) Medical examinations as deemed necessary to oversee the health of the chimpanzees, in the least invasive manner possible. Collection of samples routinely obtained during a physical examination for processing during this time is also considered noninvasive since a separate event is not required;

(4) Administration and evaluation of environmental enrichment used to promote the psychological well-being of the chimpanzees; and

(5) Actions taken to provide essential medical treatment to an individual chimpanzee exhibiting symptoms of illness. This applies only to serious illness that cannot be treated while the chimpanzee remains within the colony.

Outdoor housing facility (area) means corrals, Primadomes (a prefabricated outdoor housing unit), fenced open areas, or similar structures or areas for maintaining chimpanzees with access to adequate protection from the extremes of environmental elements and harsh weather conditions.

Outdoor ranging area means an area that allows chimpanzees greater ranging space than corrals or other outdoor housing area and includes a variety of vegetation, shrubbery, grasses and trees, thereby providing for a fairly unrestricted natural setting for the chimpanzees to engage in species-appropriate activities. The area is secured by an outer perimeter barrier.

Project Officer means the individual designated by the Federal Government to represent the contracting officer and interests of the federal agency, within defined areas, in monitoring and overseeing the chimpanzee sanctuary system contract.

Sanctuary Chimpanzee Care Committee (SCCC) or similar designated committee means the group of individuals designated by the CEO of the sanctuary that reviews and monitors adherence to the policies, procedures, and regulations at the sanctuary.

Sanctuary Contractor means the nonprofit, private entities selected by NCRR/NIH to develop and operate the chimpanzee sanctuary system. This contractor is also known as the ''primary contractor'' for the sanctuary system.

Sanctuary Director means the individual who provides day-to-day direction and oversight to the employees responsible for performing the daily tasks at the facility.

Sanctuary or federally supported chimpanzee sanctuary system means the sanctuary or sanctuary system established by the Federal Government through contracting with a private, nonprofit entity, for the purpose of carrying out the provisions of the CHIMP Act of 2000. The system includes a primary Contractor and may include additional subcontractors as required. This sanctuary system is supported primarily from funds allocated by NCRR/NIH/HHS with some matching funds from the nonprofit contractor.

Secretary means the Secretary of Health and Human Services or his/her designee.

Subcontractor means a private, nonprofit entity selected by the primary contractor to provide additional sanctuary services.

Surplus chimpanzees means chimpanzees that are no longer needed in research and that were used, or were bred or purchased for use, in research conducted or supported by the Federal Government.

USDA licensed intermediate handler/carrier means any person, including a department, agency, or instrumentality of the United States or of any State or local government, who is engaged in any business in which it receives custody of animals in connection with their transportation in commerce and who is licensed by the USDA.

Zoonotic disease(s) means diseases that are transmissible from chimpanzees to humans.

§9.3 Sanctuary policies and responsibilities.

(a) *What are the policies and responsibilities governing the sanctuary system?* It will be the policies and responsibilities of the sanctuary system to:

(1) Appoint a Board of Directors (BOD) responsible for the overall governance and direction of the Sanctuary. The BOD shall designate the Chief Executive Officer (CEO), who is responsible for the management and oversight of the daily operations of the sanctuary and the performance of other delegated tasks. Subcontractors, if applicable, shall be governed by the policies that are developed by the Board of Directors of the primary contractor.

(2) Direct the BOD to:

(i) Ensure that chimpanzees accepted into the sanctuary are not discharged;

(ii) Develop guidelines for accepting chimpanzees not owned by the Federal Government into the sanctuary if the conditions are met as outlined in 42 U.S.C. 287;

(iii) Ensure that the Board of Directors of the primary contractor consists of no more than thirteen (13) individuals, and that the conditions governing the terms of the Board members are in compliance with the CHIMP Act;

(iv) Include individuals with the following expertise and experience as set forth in the CHIMP Act;

(A) At least one veterinarian who is qualified in veterinary care of nonhuman primates. These qualifications may be met through postdoctoral training, experience, or both;

(B) Individual(s) with expertise and experience in zoological science and with knowledge in behavioral primatology;

(C) Individual(s) with experience in the animal protection field;

(D) Individual(s) with experience and expertise in the field of business and management of nonprofit organizations;

(E) Individual(s) knowledgeable and experienced in accrediting programs of animal care;

(F) Individual(s) with experience and expertise in containing biohazards;

(v) Ensure that a member of the Board of Directors serves as the Chair of the Board of Directors, who may be elected or appointed by the Board from among the individuals identified in paragraphs (a) (1) (iv) (A) through (F) of this section;

(vi) Ensure that no member of the board shall have been fined for, or

signed a consent decree for, any violation of the Animal Welfare Act;

(vii) Create a safe and species-appropriate physical and social environment for the lifetime care of chimpanzees;

(viii) Comply with all applicable provisions of the animal welfare regulations and other federal, state and local laws, regulations, and policies;

(ix) Achieve accreditations from appropriate accrediting bodies within a reasonable time frame mutually agreed upon by the Contractor and NCRR;

(x) Prohibit any invasive research on the resident chimpanzees, but permit noninvasive studies (Definitions for the terms *invasive* and *non-invasive* are set forth in § 9.2 of this part.);

(xi) Prohibit exhibition of chimpanzees in the sanctuary (This policy does not prohibit educational activities that may involve limited viewing of chimpanzees in their environment and that are designed to promote an understanding of chimpanzee behavior, well-being, or importance to the ecological system that does not adversely affect the chimpanzees' routine.);

(xii) Staff the organization with people with appropriate experience; and

(xiii) Authorize the establishment of a Sanctuary Chimpanzee Care Committee (SCCC) that is appointed by and reports to the CEO or President of the company or corporationThe SCCC is responsible for overseeing the chimpanzee care program and operations to ensure the health and well-being of the chimpanzees and the occupational safety of the staff are being addressed. The Committee must consist of no fewer than five people who must include:

(A) A chair (person) knowledgeable of the needs of chimpanzees;

(B) A veterinarian with chimpanzee care experience;

(C) A behaviorist with experience in chimpanzee behavior;

(D) A member of the chimpanzee care staff; and

(E) Member or members from the community, including at least one with affiliation or employment with an animal protection organization as defined in § 9.2 of this part.

(F) The SCCC will:

(*1*) Oversee and evaluate the chimpanzee care and socialization program;

(*2*) Review and approve proposed education programs. No program should be approved that might interfere with the chimpanzees' well-being or routine activities;

(*3*) Conduct a formal review of the program on a semiannual basis and submit reports to the Sanctuary Director. The reports must be available for review by the USDA and NIH representatives during site visits;

(*4*) Establish a mechanism for receipt and review of concerns involving the care of chimpanzees and resolving such concerns;

(*5*) Review all noninvasive study proposals. The SCCC membership may require additional qualified individuals to perform the functions of an Animal Care and Use Committee (ACUC) if and when the need arises. The contractor may establish a separate ACUC. The ACUC must be established in accordance with the applicable provisions of the Animal Welfare Act regulations, the Public Health Service Policy on Humane Care and Use of Laboratory Animals, and these standards of care;

(*6*) Review all euthanasia events. Euthanasia events performed for medical or humane reasons must be based upon sound professional veterinary judgment that conforms to current veterinary medical practices and must be in the best interest of the chimpanzee. Euthanasia performed for emergency reasons without advance review by the SCCC shall be reviewed by the SCCC as soon as possible after the event to ensure compliance with established policy;

(*7*) Establish procedures to prevent any reproduction in the colony through appropriate permanent birth control, preferably by vasectomy of all sexually mature male chimpanzees in the sanctuary; and

(*8*) Develop procedures for maintaining chimpanzees that are seropositive for or harboring infectious agents or previously have been exposed to infectious agents (whether experimentally induced or naturally occurring) that will allow them to be accepted by the sanctuary and properly housed. The procedures must be submitted to NCRR/NIH for approval.

(b) *Who is responsible for developing or revising sanctuary policies?* (1) The Sanctuary Contractor is responsible for developing, revising, and implementing policies affecting the sanctuary.

(2) The federal agency (NCRR/NIH) designated by the Secretary must concur with any changes that substantially change existing policies. The Secretary, or designee, will determine if a policy change will have a substantial impact upon current policy after consultation with the Sanctuary Contractor.

§9.4 Physical facility policies and design.

(a) *What standards apply to the facility design and physical plant?* The chimpanzee sanctuary facility must be designed to provide sufficient space and variety of natural or artificial objects to accommodate natural activities of chimpanzees while restricting their movement and range to the defined area. Daily observation of chimpanzees within the enclosures is required and shall be accomplished with minimal disturbance to the chimpanzees. The facility design and physical plant should be in accordance with the recommendation of *The Guide for the Care and Use of Laboratory Animals (Guide)*, where applicable. The *Guide* is published by the National Research Council, 1996, International Standard Book Number 0–309–05377–3. The *Guide* is incorporated by reference in this section. The Director of the Federal Register approves this incorporation by reference in accordance with 5 U.S.C. 552(a) and 1 CFR part 51. You may obtain a copy of the publication from the National Academy Press, 2101 Constitution Avenue, NW., Lockbox 285, Washington, DC 20055; or you may order it electronically via the Internet at *http://www.nap.edu*; or view it online at *http://oacu.od.nih.gov/regs/guide/guidex.htm*. You may inspect a copy at NIH, NCRR, 1 Democracy Plaza, 6701 Democracy Boulevard, Bethesda, MD 20817–4874, or at the National Archives and Records Administration (NARA). For information on the availability of this material at NARA, call 202–741–6030, or go to *http://www.archives.gov/federal_register/code_of_federal_regulations/ibr_locations.html*.

(1) The facility design and physical plant consist of the following components: Indoor design features; outdoor design features; construction and construction materials; physical barriers; shelter; service support space, including storage areas for food, supplies, and equipment; personnel and administrative support space; quarantine and isolation facilities; treatment area; heating, ventilation, and air conditioning (HVAC); food preparation area; and animal waste treatment.

(2) A housing system shall include indoor and outdoor enclosures that must be kept in good repair to prevent escape and injury to the chimpanzees, promote physical comfort, facilitate sanitation and servicing, and address the psychological well-being and social needs of the chimpanzees. Chimpanzees must be able to retreat from areas where they feel threatened or agitated by close human encounters or encounters with other chimpanzees.

(3) Indoor areas shall have special areas for social introductions and medical treatment. Quarantine and isolation facilities are required for the sanctuary. These facilities must be designed to prevent the spread of undesirable agents from quarantine and isolation rooms to other parts of the facility.

(4) Outdoor areas must provide sufficient ranging space and either natural or artificial structures that chimpanzees can use for shelter or nesting areas to sleep, rest, or seek refuge from rain, direct sun, wind, and extreme temperatures.

(5) Animal waste from the Sanctuary must be properly treated to remove known hazardous agents before discharging it into the environment in accordance with currently acceptable and effective waste treatment procedures, including current industry standards and Federal laws, regulations or guidelines, as applicable.

(6) An area for treatment of and performing veterinary clinical procedures on chimpanzees must be provided at each Sanctuary site. This area must be constructed and provisioned to perform emergency procedures, including minor surgery and emergency surgical procedures, complete physical examinations,

and facilities for extended care of medical conditions as needed.

(b) *What security measures are required for the sanctuary?* The sanctuary must provide adequate security against unauthorized entry, sabotage, malicious damage, and theft of chimpanzees and property and must minimize any chance of escape by a chimpanzee. The security staff must have training and/or experience in methods and equipment designed to detect possible security breaches and the ability to respond to security events in a timely and effective manner. Perimeter containment shall be used to protect the compound housing the chimpanzees consistent with the recommendations of the *Guide* (incorporated by reference, see paragraph (a) of this section).

(c) *Is the sanctuary required to develop disaster and escaped animal contingency plans?* The sanctuary facility must prepare disaster and escaped animal contingency plans outlining simple and easy to follow plans for dealing with natural and man-made disasters and steps to be taken in case a chimpanzee escapes from the compound. The Sanctuary also must provide adequate security against unauthorized entry, sabotage, malicious damage, and theft of chimpanzees and property and must minimize any chance of escape by a chimpanzee. Primary barriers must be constructed to prevent escape of chimpanzees and secondary or perimeter barriers must prevent entry of unauthorized persons into the facility, consistent with the recommendations of the *Guide* (incorporated by reference, see paragraph (a) of this section).

§ 9.5 Chimpanzee ownership, fees, and studies.

(a) *Who owns the chimpanzees in the federally supported sanctuary?* The Federal Government retains ownership of chimpanzees owned by the Federal Government at the time they enter the sanctuary system. Non-federally owned or supported chimpanzees will be owned by the sanctuary. The chimpanzees shall continue to be maintained in the sanctuary throughout their lifetime and shall not be discharged from the sanctuary except as specifically indicated in the CHIMP Act.

(b) *Is there a charge for placing chimpanzees in the sanctuary?* No fees shall be charged by the Sanctuary Contractor for federally owned or supported chimpanzees entering the sanctuary. Chimpanzees that were owned by a NPRC when the CHIMP Act became effective are also admitted without payment of fees. Fees for maintenance of the chimpanzees alluded to above are provided for in the contract between the Federal Government and the Sanctuary Contractor.

(c) *May the sanctuary agree to accept chimpanzees that are not owned by the Federal Government?* The sanctuary may accept chimpanzees that are not owned by the Federal Government subject to the following conditions:

(1) Ownership of the chimpanzee must be transferred to the sanctuary;

(2) Fees for these chimpanzees may be levied based on a range of considerations that include most importantly, the well-being of the chimpanzee and, secondarily, factors that include (but are not limited to) the resources available to support the chimpanzee; the health, age, and social history of the chimpanzee; and other relevant factors affecting the cost of caring for the chimpanzee. While chimpanzees not owned or supported by the Federal Government may be admitted to the sanctuary, federal funds may not be used for their support unless authorized by the Secretary or an authorized designee;

(3) Available space exists in the sanctuary; and

(4) An agreement exists between the sanctuary system and the NCRR/NIH documenting that the chimpanzee may be brought into the sanctuary.

(d) *What additional conditions apply when nongovernmental owned chimpanzees transfer to the chimpanzee sanctuary?* The following additional conditions apply when nongovernmental owned chimpanzees transfer to the chimpanzee sanctuary:

(1) Chimpanzees transferred to the sanctuary sites must be permanently incapable of reproduction, for example, by vasectomy, tubal ligation, or another reliable procedure;

(2) Complete histories must accompany each chimpanzee. Any chimpanzee missing documentation for any

period of research or other use may not be transferred to the Sanctuary without the concurrent authorization of the Sanctuary Contractor's Board of Directors and the NCRR; the records may be created and retained in electronic form; and

(3) Appropriate screening of each chimpanzee must be performed to assess the likelihood of the chimpanzee being a health or safety threat to the care staff and/or other chimpanzees.

(e) *What are the criteria for acceptance and the fees for admission into the sanctuary for nongovernmental owned chimpanzees?* The chimpanzee Sanctuary Contractor, in conjunction with NCRR, must establish criteria and a fee system for acceptance of nongovernmental owned chimpanzees. Funds collected for this purpose must be accounted for and used to help defray the expenses incurred in operating the sanctuary.

(f) *Under what circumstances might a chimpanzee from the sanctuary be returned to research at a United States research facility?* In December 2007, the CHIMP Act was amended by the ''Chimp Haven is Home Act,'' which terminated the authority for the removal of chimpanzees from the sanctuary system for research purposes.

§9.6 Animal care, well-being, husbandry, veterinary care, and euthanasia.

(a) *What are the requirements for promoting the well-being of sanctuary chimpanzees?* The goal of chimpanzee housing and management in the sanctuary is to promote the chimpanzees' well-being.

(b) *What are the provisions for daily chimpanzee husbandry and care?* Adequate and proper care for chimpanzees in the sanctuary must be provided with respect to physical environment, housing and husbandry, behavioral management, and population management and control. Specific requirements include the following:

(1) Chimpanzees must have access to food, water, and bedding at all times, unless medical or behavioral conditions dictate otherwise. Husbandry procedures shall represent current policies and practices and conform to standards set by a nationally recognized accrediting association in accordance with the *Guide* (incorporated by reference, see paragraph (a) of §9.4).

(2) Indoor primary enclosures must be cleaned as often as required to maintain a clean and healthy environment, with a minimum of once daily. Outdoor enclosures must be monitored daily and cleaned on a routine basis. Outdoor ranging areas will not require a routine cleaning schedule but must be monitored for excessive accumulation of waste or other unhealthy conditions. Housing areas shall provide sufficient space for chimpanzees to perform species-typical behavior and expression. Examples of such activities include but are not limited to natural movements, climbing, swinging, resting, running, group interactions, sleeping, etc. Feeding and watering implements must be sanitized at intervals required to maintain them in a sanitary condition, in accordance with the *Guide* (incorporated by reference, see paragraph (a) of §9.4).

(3) The federally supported chimpanzee sanctuary must employ a behavioral scientist knowledgeable in primate behavior and socialization requirements. This individual shall provide primary leadership in developing, implementing, and monitoring the chimpanzee behavioral guidelines for the sanctuary. Enrichment techniques used shall be currently accepted practices. The sanctuary must provide for the expertise to plan, administer, and evaluate the effectiveness of the well-being program.

(4) Many chimpanzees can be trained through positive reinforcement to cooperate with a variety of veterinary and chimpanzee care procedures. Efforts must be made to develop or maintain this capability for chimpanzees housed in the sanctuary to the extent possible. Trainers must use currently acceptable practices that do not include physical punishment.

(c) *What are the requirements for an adequate veterinary care and animal health program?* The sanctuary staff must provide sufficient resources of personnel, equipment, supplies, and facilities to enable the provision of adequate veterinary care as set forth in the *Guide* (incorporated by reference,

see paragraph (b) of §9.4). For additional guidance see the American College of Laboratory Animal Medicine document, ''The Provision of Adequate Veterinary Care,'' available on the Internet at *http://www.aclam.org*.

(1) If the sanctuary houses chimpanzees with infectious diseases, it must have a veterinarian knowledgeable in the infectious diseases and care of chimpanzees. The Facility Veterinarian is responsible for establishing and implementing a health monitoring system specifically designed to meet the health requirements of chimpanzees in the sanctuary. Routine observation and the prevention of disease, metabolic conditions, abnormal behavior and injury must be a priority focus of the Facility Veterinarian and staff.

(2) Newly received chimpanzees must be quarantined for a period for physiological, psychological, and nutritional stabilization before their introduction to the rest of the group. The stabilization period must be lengthened appropriately if the chimpanzee has a significant medical problem or if abnormal medical findings are detected during the quarantine period. If the chimpanzee has not been given a complete physical examination within six months, an examination must be conducted during the stabilization period.

(3) The sanctuary must implement appropriate methods for disease surveillance and diagnosis of diseases, which may include the following:

(4) Tuberculin (TB) tests must be negative for two (2) consecutive tests before the chimpanzee is released from quarantine. Any chimpanzee that is suspected of harboring the TB organism, or that is diagnosed with TB will be isolated and treated until determined by the Facility Veterinarian to be of no health risk to other chimpanzees or humans. The Facility Veterinarian may recommend euthanasia in those cases that do not respond to therapy and in which the chimpanzee consequently experiences undue pain and suffering that cannot be alleviated. The procedures noted under §9.6 (d) must be observed if euthanasia is necessary.

(5) Fecal samples must be checked for parasites and parasitic ova.

(6) A complete blood count and serum chemical panel must be obtained.

(7) Additional serum for banking and/or testing shall be obtained as appropriate by the Facility Veterinarian and is considered beneficial for chimpanzee health.

(8) If the donating facility did not test for the appropriate viruses, the sanctuary must perform a viral panel and serology for the various chronic hepatitis viruses and HIV.

(9) Additional tests or procedures that are deemed beneficial to the chimpanzees' health may be required by the Facility Veterinarian.

(10) Chimpanzees are susceptible to many of the vaccine preventable diseases of human childhood. Appropriate vaccines must be considered and administered if deemed necessary, at the discretion of the Facility Veterinarian, to protect the chimpanzees in the sanctuary. Methods of disease prevention, diagnosis, and therapy must comply with those currently accepted in veterinary medical practice. Arrangements with diagnostic laboratories must be established before chimpanzees arrive at the sanctuary.

(11) The sanctuary must minimize the use of physical and chemical restraint. Chimpanzees in the sanctuary shall be trained to permit certain procedures with minimal or no restraint. Such procedures may include injections, dosing or other treatments, and cage-side health observations. However, chemical sedation sometimes may be appropriate for certain necessary medical interventions or for the safety of the chimpanzee and caregivers. If physical restraint measures are necessary, due consideration must be given to the temporary or permanent effects upon the chimpanzee and human and animal safety concerns.

(12) Methods used to relieve pain must be documented in the chimpanzee medical or surgical records. These records will be available for review by USDA and NIH representatives. The Facility Veterinarian must ensure that pain management is current and in accordance with acceptable veterinary medical practices.

(13) Chimpanzees must be cared for by qualified personnel on a daily basis, including weekends and holidays, to

safeguard their well-being. Emergency veterinary care must also be available during these times. Notification procedures must be documented in the form of operating procedures.

(d) *Under what circumstances is euthanasia permitted?* As stated in section 481C(d)(2)(I) of the Public Health Service Act, as added by section 2 of the CHIMP Act, none of the chimpanzees may be subjected to euthanasia except when it is in the best interest of the chimpanzee involved as determined by the SCCC and the Facility Veterinarian. Therefore, euthanasia for medical or humane reasons is permitted. Euthanasia may be permitted for reasons of health or quality of life of the individual chimpanzee, including for disease, in connection with trauma, complications of aging, or for other humane reasons. The sanctuary must establish a policy on euthanasia that will provide conditions that must be met before euthanasia is permitted and guidance for performing euthanasia.

(1) Methods of euthanasia will be consistent with the most recent report of the American Veterinary Medical Association Panel on Euthanasia (2002), unless more reliable data becomes available. When euthanasia is performed, the veterinarian will determine the appropriate agent, and it will be administered only by properly trained personnel under the direction of the Facility Veterinarian. The decision to perform euthanasia will be made by the veterinarian in consultation with the Facility Director or Deputy Director.

(2) The SCCC will participate in the decision in nonmedical emergencies. All euthanasia decisions must be reviewed by the SCCC, preferably prior to euthanasia. In emergencies, where euthanasia has to be performed immediately by the Facility Veterinarian, the circumstances and the decision by the Facility Veterinarian will be presented at the next scheduled or special meeting of the SCCC. The NCRR Project Officer must be notified of the euthanasia event within 72 hours by electronic or telephonic means. Euthanasia of individual chimpanzees may negatively affect the care staff and appropriate counseling and psychological support shall be considered.

§9.7 Reproduction.

Chimpanzee reproduction is prohibited in the sanctuary. Therefore, all males must be sterilized by vasectomy before acceptance into the system, or, as a temporary measure, housed apart from females until they are sterilized. Vasectomies are advisable because they are minimally invasive and because effectiveness of the vasectomy may be validated through laboratory testing for semen. Seminal collection techniques must be carefully evaluated to avoid painful stimuli. Other proven methods of birth control may be used under special conditions deemed appropriate by the Facility Veterinarian and SCCC. The Facility Veterinarian must determine the appropriate test(s) to use to validate sterility. A veterinarian experienced in performing vasectomies in chimpanzees should perform the operation. Documentation must accompany each male accepted to the sanctuary system attesting to the fact that the male has been vasectomized and laboratory tests confirm that a segment of the Vas Deferens has been removed, or that the test used is reliable and is negative for sperm. The sanctuary must have a contingency plan for handling accidental births that includes the length of time the offspring is expected to remain with the mother.

§9.8 Animal records.

(a) *What records must be maintained for chimpanzees in the sanctuary and how are they managed?* (1) Contractors and Subcontractors operating the federal chimpanzee sanctuary system must maintain appropriate records to allow for accountability and disposition of chimpanzees under their care as required by the USDA Animal Welfare Regulations (9 CFR 2.35). The records may be created and retained in electronic form.

(2) The animal records currently required by the USDA Animal Welfare Regulations are also required for these standards. Chimpanzees must be individually and permanently identifiable.

(3) Retrievable records must be maintained for a minimum of three years beyond the disposition or death of each chimpanzee in accordance with the Animal Welfare Regulations section 2.35(f) (9 CFR 2.35(f)). Original records

or a copy must be transferred if the chimpanzee moves to a different facility. The records must include standard information, including permanent individual identification, research use(s), reproductive status (past and present), a summary or copy of the medical and behavioral history, the sire's identification number (if available), the dam's identification number, birth date, sex, and date acquired by the sanctuary. The disposition date must also be noted, if applicable, including whether the chimpanzee died or was transferred to another site in the federal sanctuary system. The records may be created and retained in electronic form.

(4) The contractor and any subcontractor(s) operating the federally supported chimpanzee sanctuary must provide special, quarterly, and annual progress reports to the designated Federal officials as identified in the contract. The annual report must also contain a statement that certifies the sanctuary is in full compliance with these standards of care regulation.

(b) *What are the rules governing the disposition of necropsy records?* The CHIMP Act requires that necropsy records from chimpanzees previously used in federally funded research projects be made available on a reasonable basis to investigators engaged in biomedical or behavioral research. In order to comply with this provision, the contractor for the sanctuary system must devise a plan that will allow interested parties to contact the sanctuary and receive necropsy records when they become available. Records may be provided free of charge but requesters may be required to pay for packaging and shipping costs. The records may be created and retained in electronic form.

§ 9.9 Facility staffing.

How many personnel are required to staff the chimpanzee sanctuary and what qualifications and training must the staff possess? (a) The professional, managerial, and support staff must be sufficient to support the scope and diversity of the activities and chimpanzee population of the sanctuary. The level of staffing shall be adequate to ensure that the chimpanzees receive appropriate health care, are well cared for, and the administrative and fiscal operations are sound and in keeping with current practices required by NCRR/NIH;

(b) There must be a sufficient number of appropriately trained animal care and technical personnel to provide appropriate care to the chimpanzees at all times, including evenings, weekends, and holidays. The number of animal care staff to chimpanzee ratio shall be adjusted as experience is gained during the operation of the sanctuary. Sufficiently trained staff also must be available to maintain adequate behavioral enrichment;

(c) The Facility Director must be a person with experience in chimpanzee care and socialization techniques. In addition, the Director must have management and administrative experience;

(d) The Biosafety Officer must have experience in developing and monitoring biohazards and dealing with biosafety issues related to captive nonhuman primates. Experience in these areas dealing specifically with chimpanzees is desirable;

(e) The remaining staff, which may include part-time, full-time, or contractor Facility Veterinarian(s) and Behaviorist(s), must possess the skills, knowledge, and/or experience required to perform their duties, as elaborated within the regulation.

§ 9.10 Occupational Health and Safety Program (OHSP) and biosafety requirements.

(a) *How are employee Occupational Health and Safety Program risks and concerns addressed?* The sanctuary shall assure that an Occupational Health and Safety Program (OHSP) is developed and implemented in accordance with current veterinary medical practices and the guidelines and standards found in the *Guide* (incorporated by reference, see paragraph (a) of section 9.4);

(b) *How are biosafety concerns addressed?* The sanctuary shall institute and administer an effective biosafety program that addresses the biosafety hazards at that particular site. The

program shall include identifying biohazards, outlining practices and procedures to be followed, providing personal safety equipment or protective clothing and equipment, and establishing a description of the facility requirements for working with hazardous agents or materials. Policies and procedures must be implemented to avoid exposure to environmental and animal hazards. Biosafety must be included in the training program for all Sanctuary employees. In establishing a program, the Sanctuary must use current accepted practices and publications prepared by the CDC, NIH, and professional societies specializing in biosafety. The input and guidance of personnel trained or experienced in biosafety are essential. Complete records of both clinical and experimental agent exposure must accompany each chimpanzee sent to the sanctuary. The donating facility must also provide recent testing (for example, serology, virus culture, histology) so that the sanctuary staff is fully aware of the health condition of the arriving chimpanzee. The records may be created and retained in electronic form.

§9.11 Animal transport.

The transportation of chimpanzees by surface or air must be in accordance with the requirements set forth in the Animal Welfare Act and Regulations and the International Air Transport Association (IATA) Live Animal Regulations and guidelines, as applicable.

§9.12 Compliance with the Standards of Care, and USDA and PHS policies and regulations.

(a) *How will compliance with the standards set forth in this part be monitored and what are the consequences of noncompliance with the standards?* The federally supported chimpanzee sanctuary must comply with the standards of care set forth in this part and include a statement in the Annual Progress Report certifying compliance with these standards of care in accordance with the terms of the current contract between NCRR and the Sanctuary Contractor. A designated representative of the Secretary will monitor compliance. The responsibility to monitor compliance with the standards is delegated to NCRR/NIH/HHS. The NIH/NCRR Project Officer for this contract will conduct scheduled site visits at least one time annually (or more often if necessary) and review monthly and quarterly reports submitted to the Project and Contract Officer. Subcontractors are subjected to the same provisions. Failure to comply with the standards set forth in this part, or to correct deficiencies noted within the allowable time period, could result in termination of the contract by the Federal Government (HHS/NIH), or allow the Secretary to correct the deficiencies according to the terms and conditions outlined in the contract. The Secretary may impose additional sanctions on the contractor up to, and including, authorizing assumption or reassignment of the management of the sanctuary contract.

(b) *To what type of outside review or inspection will the federally supported sanctuary be subjected?* As noted in paragraph (a) of this section, the contractor for the sanctuary will be monitored on a regularly scheduled basis by representatives of NCRR/NIH/HHS. The NCRR representative will use facility site visits, reports, personal contact, and any other means as appropriate to ensure compliance with these standards. The contractor and subcontractors are required to obtain and maintain an Animal Welfare Assurance from NIH's Office of Laboratory Animal Welfare (OLAW) when chimpanzees are used for noninvasive studies as authorized in the CHIMP Act. In addition, the sanctuary must achieve accreditation by a nationally recognized animal program accrediting body (such as the AAALAC, the AZA, or similar recognized body) within a time frame to be determined by NCRR/NIH. The federally supported sanctuary must comply with the requirements set forth in the Animal Welfare Regulations (9 CFR parts 1 through 3).

§9.13 Other federal laws, regulations, and statutes that apply to the sanctuary.

(a) Animal Welfare Act (7 U.S.C. 2131–2159).

(b) Animal Welfare Regulations, 9 CFR, subchapter A, parts 1 and 2; part

3, subpart D—Specifications for the Humane Handling, Care, Treatment, and Transport of Nonhuman Primates.

SUBCHAPTER B—PERSONNEL

PART 21—COMMISSIONED OFFICERS

Subpart A—Definitions

Sec.
21.1 Meaning of terms.

Subpart B—Appointment

PROVISIONS APPLICABLE BOTH TO REGULAR AND RESERVE CORPS

21.21 Meaning of terms.
21.22 Submission of application and evidence of qualifications.
21.23 False statements as disqualification.
21.24 Physical examinations.
21.25 Eligibility; junior assistant grade.
21.26 Eligibility; assistant grade.
21.27 Eligibility; senior assistant grade.
21.28 Age requirements, Regular Corps, senior assistant grade and below.
21.29 Eligibility; grades above senior assistant grade.
21.30 Determination of creditable years of educational and professional training and experience.
21.31 Eligibility; all grades; academic and professional education and professional training and experience.
21.32 Boards; appointment of; powers and duties.
21.33 General service.
21.34 Certification by candidate; requirement of new physical examination.

PROVISIONS APPLICABLE ONLY TO REGULAR CORPS

21.41 Professional examinations, holding of; subjects to be included.
21.42 Examinations; junior assistant, assistant, or senior assistant grade.
21.43 Examination; full grade and above.
21.44 Clinical or other practical demonstration.
21.45 Rating values.
21.46 Merit roll.
21.47 Examination; anticipation of meeting qualifications.

PROVISIONS APPLICABLE ONLY TO RESERVE CORPS

21.51 Appointment of officers having specialized training or experience in administration and management.
21.52 Waiver of entrance qualifications for original appointment in time of war or national emergency.
21.53 Examination.
21.54 Students.
21.55 Appointment to higher grades; candidates exceptionally qualified in specialized fields.
21.56 Reappointment.
21.57 Examination for reappointment.
21.58 Physical examination for reappointment.

Subpart C—Involuntary Child and Spousal Support Allotments

21.70 Purpose.
21.71 Applicability and scope.
21.72 Definitions.
21.73 Policy.
21.74 Responsibilities.
21.75 Procedures.

Subpart A—Definitions

AUTHORITY: Sec. 215, 58 Stat. 690, as amended; 42 U.S.C. 216.

§ 21.1 Meaning of terms.

As used in this part, the term:

(a) *Act* means the Public Health Service Act, 58 Stat. 682, as now or hereafter amended.

(b) *Department* means the Department of Health and Human Services.

(c) *Secretary* means the Secretary of Health and Human Services.

(d) *Service* means the Public Health Service.

(e) *Surgeon General* means the Surgeon General of the Public Health Service.

(f) *Commissioned officer* or *officer*, unless otherwise indicated, means either an officer of the Regular Corps or an officer of the Reserve Corps.

[21 FR 9806, Dec. 12, 1956]

Subpart B—Appointment

AUTHORITY: Sec. 215, 58 Stat. 690, as amended; 42 U.S.C. 216; sec. 208, 58 Stat. 685, as amended; 42 U.S.C. 209.

SOURCE: 21 FR 9806, Dec. 12, 1956, unless otherwise noted.

PROVISIONS APPLICABLE BOTH TO REGULAR AND RESERVE CORPS

§ 21.21 Meaning of terms.

The terms *approved school*, *approved college*, *approved postgraduate school*, or

approved training course means, except as otherwise provided by law:

(a) A school, college, postgraduate school, or training course which has been accredited or approved by a professional body or bodies recognized by the Surgeon General for such purpose, or which, in the absence of such a body, meets generally accepted professional standards as determined by the Surgeon General, or

(b) In the case of a candidate who is applying for appointment as a medical officer, any non-approved medical school provided that the candidate has passed examinations given by a professional body or bodies recognized by the Surgeon General for such purpose.

[24 FR 1790, Mar. 12, 1959]

§ 21.22 Submission of application and evidence of qualifications.

(a) *Application form.* Every candidate for examination for appointment as an officer shall submit a written application on such form as may be prescribed by the Surgeon General.

(b) *Documentary evidence.* The application shall be accompanied by such documentary evidence as may be required by the Surgeon General.

§ 21.23 False statements as disqualification.

Willfully false statements shall be cause for rejection of the application or, as provided in subpart N of this part, for dismissal.

§ 21.24 Physical examinations.

Every candidate for appointment as an officer shall undergo such physical examination as the Surgeon General may direct, and no candidate who is not found to be physically qualified shall be appointed as an officer.

§ 21.25 Eligibility; junior assistant grade.

(a) *Requirements; all candidates.* Except as provided in § 21.54, and as otherwise provided in this section, every candidate for examination for appointment in the grade of junior assistant:

(1) Shall be a citizen of the United States;

(2) Shall be at least 18 years of age; and

(3) Shall have been granted an academic or professional degree from an approved school, college, or postgraduate school, and, unless the required professional training has been otherwise obtained from an approved school, college, or postgraduate school, shall have majored in the profession in which the examination is being held.

(b) [Reserved]

(c) *Special requirement; therapists.* Every candidate for examination for appointment as a therapist shall have received a certificate from an approved school of physical therapy or an approved school of occupational therapy.

[21 FR 9806, Dec. 12, 1956, as amended at 30 FR 9437, July 29, 1965]

§ 21.26 Eligibility; assistant grade.

(a) *Requirements; all candidates.* Except as otherwise provided in this section every candidate for examination for appointment in the grade of assistant:

(1) Shall meet the requirements for eligibility for examination for appointment in the grade of junior assistant;

(2) Shall be at least 21 years of age; and

(3) Shall have had at least 7 years of educational and professional training or experience subsequent to high school, except that a candidate who applies for examination for appointment in the Reserve Corps to serve as a medical or dental intern may be examined for such appointment upon the completion of 6 years of such education, training, or experience.

(b) *Additional requirements; dietitians.* Every candidate for examination for appointment as a dietitian shall have successfully completed an approved training course for dietetic interns.

§ 21.27 Eligibility; senior assistant grade.

Every candidate for examination for appointment in the grade of senior assistant shall meet the requirements for eligibility for examination for appointment in the grade of assistant and shall have completed at least 10 years of educational and professional training or experience subsequent to high school.

§ 21.28 Age requirements, Regular Corps, senior assistant grade and below.

No candidate for appointment to the Regular Corps, except in the nurse category, shall be appointed (a) after age 31 to the permanent junior assistant grade, (b) after age 34 to the permanent assistant grade, or (c) after age 37 to the permanent senior assistant grade: *Provided*, That the Surgeon General may waive these age limitations, subject to other provisions of law, in the case of any officer of the Reserve Corps who is recommended for appointment to the Regular Corps by the Chief of the Bureau to which he is assigned and who has been on continuous active duty for at least two years immediately preceding the date of such recommendation. The age limitations for candidates who have had prior active service in the Commissioned Corps of the Public Health Service shall be increased by the period of such service.

[27 FR 3886, Apr. 24, 1962]

§ 21.29 Eligibility; grades above senior assistant grade.

Every candidate for examination for appointment in grades above that of senior assistant shall meet the requirements for eligibility for examination for appointment in the grade of senior assistant. Candidates for examination for appointment in the full, senior, or director grade shall have completed at least 7, 14, or 15 additional years, respectively, of postgraduate professional training for experience. When officers of the Service are unavailable for the performance of duties requiring highly specialized training and experience in special fields related to public health, the Surgeon General may specify that a candidate for appointment to the Regular Corps with such highly specialized training and experience shall be examined for appointment in the full or senior grade upon completion of at least 5 or 12 additional years, respectively, of postgraduate professional training or experience, except that the total number of such appointments during a fiscal year shall not exceed three.

[21 FR 9806, Dec. 12, 1956. Redesignated at 25 FR 5184, June 10, 1960]

§ 21.30 Determination of creditable years of educational and professional training and experience.

The level of academic attainment, the number of calendar years and the quality of educational and professional training and experience shall be considered in determining the number of years of such training and experience with which each candidate for appointment may be credited.

[25 FR 5184, June 10, 1960]

§ 21.31 Eligibility; all grades; academic and professional education and professional training and experience.

The Surgeon General is authorized, subject to the other provisions of this subpart to adopt additional standards by which the education, training, and experience required under this subpart, and evidence thereof, shall be of such specific kind and quality, pertinent to the particular profession concerned, as in his judgment are necessary to limit the examination to qualified candidates.

[21 FR 9806, Dec. 12, 1956. Redesignated at 25 FR 5184, June 10, 1960]

§ 21.32 Boards; appointment of; powers and duties.

The Surgeon General shall from time to time appoint boards and subboards of officers to consider the qualifications of candidates for appointment as officers, and shall refer to such boards the applications of those candidates who are eligible for examination for appointment. Such boards and subboards shall consist of three or more officers, the majority of whom, so far as practicable, shall be of the same profession as the candidate. The Surgeon General shall prescribe the duties of boards and subboards in relation to the examination process not otherwise prescribed in this subpart.

[21 FR 9806, Dec. 12, 1956. Redesignated at 25 FR 5184, June 10, 1960]

§ 21.33 General service.

Officers shall be appointed only to general service and shall be subject to change of station.

[21 FR 9806, Dec. 12, 1956. Redesignated at 25 FR 5184, June 10, 1960]

§ 21.34 Certification by candidate; requirement of new physical examination.

If a candidate for appointment in the Regular Corps or an officer of the Reserve Corps on inactive service has passed a physical examination within a period of one year from the date on which it is contemplated that he will be appointed or called to active duty, he shall, prior to being appointed or called to active duty, certify that to the best of his knowledge and belief he is free from all disease or injury not noted in his record at the time of his examination and that he is willing to serve in any climate. If a candidate for appointment in the Regular Corps, or an officer of the Reserve Corps on inactive service, has not passed a physical examination within a period of one year from the date on which it is contemplated that he will be appointed or called to active duty, he may, prior to being appointed or called to active duty, be required to undergo such physical examination as the Surgeon General may direct to determine his physical qualification for appointment or call to active duty in accordance with standards prescribed for original appointment, or he may be appointed or called to active duty after executing the certificate described in this section, but shall be physically examined to determine his physical qualification for continued active service in accordance with standards prescribed for original appointment within a period of 15 days after reporting for duty at his first station.

[21 FR 9806, Dec. 12, 1956, as amended at 24 FR 1790, Mar. 12, 1959. Redesignated at 25 FR 5184, June 10, 1960]

PROVISIONS APPLICABLE ONLY TO REGULAR CORPS

§ 21.41 Professional examinations, holding of; subjects to be included.

From time to time the Surgeon General may order examinations to be held in such professions or specialties within professions and for such grades as he deems necessary for the purpose of providing merit rolls of eligible candidates for appointment in the Regular Corps and shall, if a professional examination is to be required, prescribe the subjects relating to each profession or specialty within such profession in which candidates will be examined.

[21 FR 9806, Dec. 12, 1956, as amended at 24 FR 1790, Mar. 12, 1959]

§ 21.42 Examinations; junior assistant, assistant, or senior assistant grade.

The examination for appointment to the junior assistant, assistant, or senior assistant grade in the Regular Corps shall consist of (a) a written professional examination relating to the fundamentals of the candidate's profession or specialty within his profession and their relationship to the activities of the Service, and (b) an examination as to the candidate's general fitness, which shall include an oral interview, and a review and evaluation of the candidate's academic and professional education and professional training and experience, and may include other written tests to determine the candidate's fitness for appointment as an officer. If an applicant for appointment to any of these grades is an officer of the Reserve Corps who has been on active duty for not less than one year immediately preceding his application, the Surgeon General may direct that the officer be examined as provided in § 21.43.

[21 FR 9806, Dec. 12, 1956, as amended at 24 FR 1790, Mar. 12, 1959; 25 FR 11099, Nov. 23, 1960]

§ 21.43 Examination; full grade and above.

The examination for appointment to the full, senior, or director grade in the Regular Corps shall consist of a review and evaluation of the candidate's academic and professional education and professional training and experience. The Surgeon General may, however, direct that the examination of a candidate for appointment to any such grade shall also include an oral interview, a written or oral professional examination, or both.

§ 21.44 Clinical or other practical demonstration.

In the discretion of the Surgeon General a candidate for appointment to any grade up to and including the senior assistant grade in the Regular

Corps may be required to perform successfully a clinical or other practical demonstration which, if required, shall constitute a part of the professional examination.

§21.45 Rating values.

The examination of every candidate for appointment to any grade in the Regular Corps shall be rated by a board appointed pursuant to §21.30 in accordance with such relative values for each part of the examination as are prescribed by the Surgeon General. No candidate who receives a final rating below 80 shall be appointed in the Regular Corps.

§21.46 Merit roll.

Each board appointed pursuant to §21.30 to consider the qualifications of candidates for appointment as officers shall assign a numerical rating to each candidate for appointment in the Regular Corps who passes the examination, and shall submit a report to the Surgeon General of the ratings and the relative standing of all such candidates for each grade in each profession or specialty within a profession. The Surgeon General shall submit each such report with his recommendations to the Secretary, and, if approved by the Secretary, the report shall constitute a merit roll from which the Secretary shall, in accordance with relative standing, recommend available persons to the President for nomination as commissioned officers of the Regular Corps. A board may consider any newly discovered evidence relating to the physical, professional, or personal qualifications of any candidate examined for appointment. Upon recommendation of such board after review of such evidence, the Surgeon General, with the approval of the Secretary, may correct the rating of a candidate or may qualify or disqualify a candidate. The placing of a candidate's name on a merit roll shall give no assurance of an appointment. A merit roll shall expire when a new merit roll in the same profession or specialty within a profession and grade has been established, but no merit roll shall continue in effect longer than two years after its approval by the Secretary. Every candidate who has not been nominated by the President for appointment prior to the expiration of a merit roll on which his name appears, shall, unless he requests the opportunity to be reexamined, be rated with the next group of candidates of the same profession or specialty within a profession for appointment in the same grade and shall be given the same rating he had on the expired merit roll. If two candidates who were examined at the same time receive the same numerical rating the elder candidate shall assume relative standing on the merit roll over the younger candidate. If a candidate whose name is being transferred from an expired to a new merit roll has the same numerical rating as a candidate whose name is being placed on the new merit roll for the first time, the former shall assume relative standing on the merit roll over the latter. The name of a candidate may be removed from a merit roll in the event that he refuses an appointment when offered. No candidate's eligibility for appointment shall exceed two years unless he again becomes eligible as the result of another examination.

[21 FR 9806, Dec. 12, 1956, as amended at 24 FR 1790, Mar. 12, 1959]

§21.47 Examination; anticipation of meeting qualifications.

A potential candidate for appointment in any grade in the Regular Corps may be examined within a period of nine months prior to the date upon which it is anticipated that he will qualify for appointment under this subpart. Upon successful completion of the examination, his name will be entered on a merit roll. In the event that his name, in order of relative standing among all candidates, precedes that of fully qualified candidates, his name, for purpose of appointment, shall be passed over in favor of fully qualified candidates until such time as he becomes fully qualified, but in no event shall he otherwise lose his relative standing on the merit roll, except as provided in §21.46. If the candidate fails to qualify for appointment at the time that it was anticipated that he would qualify, his name shall be removed from the merit roll.

PROVISIONS APPLICABLE ONLY TO RESERVE CORPS

§ 21.51 Appointment of officers having specialized training or experience in administration and management.

The Surgeon General may recommend for original appointment in the Reserve Corps candidates who have specialized training or experience in administration and management relating to the functions of the Service. All such candidates shall be subject to the same eligibility requirements for original appointment as are applicable to other candidates, except that such a candidate may substitute experience in administration or management for the requirement of professional training or experience.

§ 21.52 Waiver of entrance qualifications for original appointment in time of war or national emergency.

If, in time of war or national emergency proclaimed by the President, the Secretary determines that there is need for commissioned personnel to meet the needs of the Service, other than persons eligible for examination for original appointment under the eligibility requirements prescribed in this subpart, he may prescribe standards of eligibility for examination for the original appointment of officers in the Reserve Corps without regard to such eligibility requirements. Such standards shall, however, authorize the examination only of candidates with specialized experience in administration or management or candidates with training or experience in fields relating to public health. The permanent grade of an officer who becomes eligible for examination for appointment pursuant to such standards and who becomes eligible for appointment after passage of an examination shall be limited to the junior assistant or the assistant grade, except that, if upon examination a candidate is found to be exceptionally qualified for the performance of highly specialized duties with the Service pursuant to § 21.55, he may be recommended for appointment to any grade up to and including the director grade.

[21 FR 9806, Dec. 12, 1956, as amended at 24 FR 1790, Mar. 12, 1959]

§ 21.53 Examination.

The examination of candidates for original appointment as officers to any grade in the Reserve Corps shall consist of a review and evaluation of their academic and other education and their training and experience. In the discretion of the Surgeon General the examination of any such candidate may include an oral interview, a written examination, or both.

§ 21.54 Students.

A potential candidate for appointment in the Regular Corps who is pursuing a course of instruction which, upon completion, would qualify him under § 21.25 or § 21.26 for examination for appointment in the junior assistant or assistant grade may be examined for and appointed in the Reserve Corps in the junior assistant grade but shall not be called to extended active duty until the successful completion of such course of instruction, except that: (a) He may be called to active duty for purposes of training for periods not to exceed 120 days during any fiscal year, and (b) those students who have completed at least 3 years of collegiate or professional study leading to the qualifying degree for appointment may be called to active duty for the purpose of completing the requirements of § 21.25(a)(3). An appointment made under this subpart shall be terminated upon the officer's failure to continue a full-time course of study or failure to meet the requirements of § 21.25(a)(3) within 18 months after entering on active duty.

[34 FR 706, Jan. 17, 1969]

§ 21.55 Appointment to higher grades; candidates exceptionally qualified in specialized fields.

Any candidate eligible for examination for appointment in the grade of assistant pursuant to § 21.26 who, upon examination for such purpose, is found

exceptionally qualified for the performance of duties requiring highly specialized training or experience may be recommended for appointment in the Reserve Corps in any grade up to and including the director grade without regard to the additional years of postgraduate training or experience prescribed for grades above the assistant grade.

§21.56 Reappointment.

An officer of the Reserve Corps, after being examined and found qualified for reappointment, may be recommended for reappointment to the same grade in the event that his commission expires before he becomes eligible for reappointment to a higher grade, or may be recommended for reappointment to a higher grade to be effective on or after the date on which he meets the qualifications prescribed in this subpart for original appointment to such higher grade.

§21.57 Examination for reappointment.

The examination of an officer of the Reserve Corps on active duty who is being considered for reappointment in such corps shall consist of a review and evaluation of his record with the Service. The examination of an officer of the Reserve Corps on inactive duty who is being considered for reappointment in such corps shall consist of (a) a review and evaluation of his record with the Service while on active duty, if any, and (b) the record of his training or experience during the period of his inactive duty preceding such examination. In the discretion of the Surgeon General the examination for reappointment of an officer, whether on active or inactive duty, may include an oral interview.

§21.58 Physical examination for reappointment.

Every officer of the Reserve Corps being considered for reappointment shall undergo such physical examination as the Surgeon General may direct. An officer on active duty may be recommended for reappointment unless he is found to have a physical disability which is determined to render him physically unfit to perform the duties of his office under section 402 of the Career Compensation Act of 1949, as amended. An officer may be recommended for promotion only if he meets the physical qualifications for original appointment. If an officer is not available to be physically examined because of circumstances which make it impracticable for the Service to require such examination, he may, in the discretion of the Surgeon General, be reappointed without such examination, but shall be examined as soon thereafter as practicable and his physical qualification or disqualification for continued or future active service shall be determined on the same basis as if the physical examination had been given prior to reappointment.

Subpart C—Involuntary Child and Spousal Support Allotments

AUTHORITY: 37 U.S.C. 101, 15 U.S.C. 1673, 42 U.S.C. 665.

SOURCE: 49 FR 7235, Feb. 24, 1984, unless otherwise noted.

§21.70 Purpose.

Under references 37 U.S.C. 101, 15 U.S.C. 1673, and 42 U.S.C. 665, this subpart provides implementing policies governing involuntary child or child and spousal support allotments, assigns responsibilities, and prescribes procedures.

§21.71 Applicability and scope.

(a) This subpart applies to officers in the Public Health Service Commissioned Corps. The term ''Public Health Service,'' hereinafter shall be referred to as Service.

(b) Its provisions pertain to officers of the Service under a call or order to active duty for a period of six months or more.

§21.72 Definitions.

(a) *Child support*. Periodic payments for the support and maintenance of a child or children, subject to and in accordance with State or local law. This includes, but is not limited to payments to provide for health care, education, recreation, clothing, or to meet

other specific needs of such a child or children.

(b) *Spousal support*. Periodic payments for the support and maintenance of a spouse or former spouse in accordance with State or local law. It includes, but is not limited to, separate maintenance, alimony pendente lite, and maintenance. Spousal support does not include any payment for transfer of property or its value by an individual to his or her spouse or former spouse in compliance with any community property settlement, equitable distribution of property, or other division of property between spouse or former spouse.

(c) *Notice*. A court order, letter, or similar documentation issued by an authorized person, which provides notification that an officer has failed to make periodic support payments under a support order.

(d) *Support order*. Any order providing for child or child and spousal support issued by a court of competent jurisdiction or by administrative procedures established under State law that affords substantially due process and is subject to judicial review. A court of competent jurisdiction includes Indian tribal courts within any State, territory, or possession of the United States and the District of Columbia.

(e) *Authorized person*. (1) Any agent or attorney of any State having in effect a plan approved under part D of title IV of the Social Security Act (42 U.S.C. 651–665), who has the duty or authority to seek recovery of any amounts owed as child or child and spousal support (including, when authorized under a State plan, any official of a political subdivision); and (2) the court which has authority to issue an order against the officer for the support and maintenance of a child, or any agent of such court.

(f) *Active duty*. Full-time duty in the Service, including full-time training duty.

(g) *Legal officer*. Shall be an officer of the Service or employee of the Department who is a lawyer and who has substantial knowledge of the regulations, policies, and procedures relating to the implementation of section 172 of Pub. L. 97–248.

§ 21.73 Policy.

(a) It is the policy of the Department of Health and Human Services to withhold allotments from pay and allowances of commissioned officers on active duty in the Service to make involuntary allotments from pay and allowances as payment of child, or child and spousal, support payments when the officer has failed to make periodic payments under a support order in a total amount equal to the support payable for two months or longer. Failure to make such payments shall be established by notice from an authorized person to the designated official of the Department. Such notice shall specify the name and address of the payee to whom the allotment is payable. The amount of the allotment shall be the amount necessary to comply with the support order including amounts for arrearages as well as for current support. However the amount of the allotment, when added to any other amounts withheld from the officer's pay pursuant to a support order, shall not exceed the limits for involuntary allotments from pay as prescribed in section 303 (b) and (c) of the Consumer Credit Protection Act, 15 U.S.C. 1673. An allotment under this Subpart shall be adjusted or discontinued upon notice from any authorized person.

(b) Notwithstanding the above, no action shall be taken to withhold an allotment from the pay and allowances of any officer until such officer has had an opportunity to consult with a legal officer of the Department to discuss the legal and other factors involved with respect to the officer's support obligation and his or her failure to make payments. The Department shall exercise continuing good faith efforts to arrange such a consultation, but must begin to withhold allotments on the first end-of-month payday after 30 days have elapsed since notice of an opportunity to consult was sent to the officer.

§ 21.74 Responsibilities.

(a) The General Counsel, Office of the Secretary, Department of Health and Human Services, shall be the Designated Official for the Department

and shall provide guidance to the Service regarding administration of the provisions of these regulations.

(b) The Commissioned Personnel Operations Division, Office of Personnel Management, Office of Management, Office of the Assistant Secretary for Health, shall implement the provisions of these regulations.

§21.75 Procedures.

(a) *Service of notice.* (1) An authorized person shall serve on the designated official of the Department a signed notice including:

(i) Full name of the officer;

(ii) Social security number of the officer;

(iii) Duty station location of the officer, if known;

(iv) A statement that support payments are delinquent by an amount at least equal to the amount of support payable for two months;

(v) A photocopy, along with any modifications, of the underlying support order;

(vi) A statement of the amount of arrearages provided for in the court order and the amount which is to be applied each month toward liquidation of the arrearages, if applicable;

(vii) The full name and address of the payee to whom the allotment will be payable;

(viii) Any limitations on the duration of the support allotment.

(2) The service of notice shall be accomplished by certified or registered mail, return receipt requested, or by personal service, upon the appropriate designated official of the Department. The designated official shall note the date and time of receipt on the notice.

(3) Valid service is not accomplished until the notice is received in the office of the designated official.

(4) If the order of a court or duly authorized administrative agency seeks collection of arrearages, the notice must state that the support allotment qualifies for the additional 5 percent in excess of the maximum percentage limitations found in 15 U.S.C. 1673. Supporting evidence must be submitted to the Department establishing that the support order is 12 or more weeks in arrears.

(5) When the information submitted is not sufficient to identify the officer the notice shall be returned directly to the authorized person with an explanation of the deficiency. However, before returning the notice, an attempt should be made to inform the authorized person who caused the notice to be served that it will not be honored unless adequate information is supplied.

(6) Upon proper service of notice of delinquent support payments and together with all required supplementary documents and information, the Service shall identify the officer from whom moneys are due and payable. The pay of the officer shall be reduced by the amount necessary to comply with the support order and liquidate arrearages if any, if provided by order of a court or duly authorized administrative agency. The maximum amount to be alloted under the provision together with any other moneys withheld from the officer for support pursuant to a court order may not exceed:

(i) 50 percent of the officer's disposable earnings for any month when the officer asserts by affidavit or other acceptable evidence that he or she is supporting a spouse or dependent child or both, other than a party in the support order. When the officer submits evidence, copies shall be sent to the authorized person, together with notification that the officer's support claim will be honored. If the support claim is contested by the authorized person, the authorized person may refer it to the appropriate court or other authority for resolution. Pending resolution of a contested support claim, the allotment shall be made but the amount of such allotment may not exceed 50 percent of the officer's disposable earnings;

(ii) 60 percent of the officer's disposable earnings for any month when the officer fails to assert by affidavit or other acceptable evidence, that he or she is supporting a spouse or dependent child or both;

(iii) Regardless of the limitations above, an additional five percent of the officer's disposable earnings shall be withheld when it is stated in the notice that the officer is in arrears in an amount equivalent to 12 or more weeks' support.

(b) *Disposable earnings.* (1) The following moneys, as defined in the U.S. Public Health Service Commissioned Corps Personnel Manual, are subject to inclusion in computation of the officer's disposable earnings:

(i) Basic pay;

(ii) Basic allowances for quarters for officers with dependents and officers without dependents;

(iii) Basic allowance for subsistence;

(iv) Special pay for physicians, dentists, optometrists, and veterinarians;

(v) Hazardous duty pay;

(vi) Flying pay; and

(vii) Family separation allowances (only for officers assigned outside the contiguous United States).

(c) *Exclusions.* The following moneys are excluded from the computation of the officer's disposable earnings. Amounts due from or payable by the United States shall be offset by any amounts:

(1) Owed by the officer to the United States.

(2) Required by law to be deducted from the remuneration or other payment involved including but not limited to:

(i) Amounts withheld from benefits payable under title II of the Social Security Act when the withholding is required by law;

(ii) FICA.

(3) Properly withheld for Federal and State income tax purposes if the withholding of the amounts is authorized or required by law and if amounts withheld are not greater than would be the case if the individual claimed all dependents to which he or she were entitled. The withholding of additional amounts pursuant to 26 U.S.C. 3402(i) may be permitted only when the officer presents evidence of a tax obligation which supports the additional withholding.

(4) Deducted for the Servicemen's Group Life Insurance coverage.

(5) Advances of pay that may be due and payable by the officer in the future.

(d) *Officer Notification.* (1) As soon as possible, but not later than 30 calendar days after the date of receipt of notice, the Commissioned Personnel Operations Division shall send to the officer at his or her duty station, written notice:

(i) That notice has been served, including a copy of the documents submitted;

(ii) Of the maximum limitations set forth, with a request that the officer submit supporting affidavits or other documentation necessary for determining the applicable percentage limitation;

(iii) That by submitting supporting affidavits or other necessary documentation, the officer consents to the disclosure of such information to the party requesting the support allotment;

(iv) Of the amount of percentage that will be deducted if the officer fails to submit the documentation necessary to enable the designated official of the Service to respond to the legal process within the time limits set forth;

(v) That a consultation with a legal officer is authorized and will be provided by the Department. The name, address, and telephone number of the legal officer will be provided;

(vi) That the officer may waive the personal consultation with a legal officer; however if consultation is waived action will be taken to initiate the allotment by the first end-of-month payday after notification is received that the officer has waived his/her consultation;

(vii) That the allotment will be initiated without the officer having received a personal consultation with a legal officer if the legal officer provides documentation that consultation could not be arranged even though good faith attempts to do so had been made; and

(viii) Of the date that the allotment is scheduled to begin.

(2) The Commissioned Personnel Operations Division shall inform the appropriate legal officer of the need for consultation with the officer and shall provide the legal officer with a copy of the notice and other legal documentation served on the designated official.

(3) If possible, the Commissioned Personnel Operations Division shall provide the officer with the following:

(i) A consultation in person with the appropriate legal officer to discuss the legal and other factors involved with

the officer's support obligation and his/her failures to make payment;

(ii) Copies of any other documents submitted with the notice.

(4) The legal officer concerned will confirm in writing to the Commissioned Personnel Operations Division within 30 days of notice that the officer received a consultation concerning the officer's support obligation and the consequences of failure to make payments. The legal officer concerned must advise the Commissioned Personnel Operations Division of the inability to arrange such consultation and the status of continuing efforts to contact the officer.

(e) *Lack of money*. (1) When notice is served and the identified officer is found not to be entitled to any moneys due from or payable by the Department of Health and Human Services, the Commissioned Personnel Operations Division shall return the notice to the authorized person, and advise in writing that no moneys are due from or payable by the Department of Health and Human Services to the named individual.

(2) Where it appears that moneys are only temporarily exhausted or otherwise unavailable, the Commissioned Personnel Operations Division shall advise the authorized person in writing on a timely basis as to why, and for how long, the moneys will be unavailable.

(3) In instances where the officer separates from active duty, the authorized person shall be informed in writing on a timely basis that the allotment is discontinued.

(f) *Effective date of allotment*. Allotments shall be withheld beginning on the first end-of-month payday after the Commissioned Personnel Operations Division is notified that the officer has had a consultation with a legal officer, has waived his/her right to such consultation, or the legal officer has submitted documentation that a consultation with the officer could not be arranged after good faith attempts to do so were made by the legal officer. The Service shall not be required to vary its normal allotment payment cycle to comply with the notice.

(g) *Designated official*. Department of Health and Human Services, General Counsel, Room 5362 North Building, 330 Independence Avenue, SW., Washington, DC 20201.

(Approved by the Office of Management and Budget under control number 0937–0123)

PART 22—PERSONNEL OTHER THAN COMMISSIONED OFFICERS

HANSEN'S DISEASE DUTY BY PERSONNEL OTHER THAN COMMISSIONED OFFICERS

Sec.
22.1 Duty at a station of the Service devoted to the care of Hansen's disease patients; additional pay.

SPECIAL CONSULTANTS

22.3 Appointment of special consultants.
22.5 Leave without pay while on detail.

AUTHORITY: Sec. 208(e) of the Public Health Service Act, 42 U.S.C. 210(e); E.O. 11140, 29 FR 1637.

HANSEN'S DISEASE DUTY BY PERSONNEL OTHER THAN COMMISSIONED OFFICERS

§ 22.1 Duty at a station of the Service devoted to the care of Hansen's disease patients; additional pay.

(a) Non-commissioned officers and other employees of the Service shall not receive any additional compensation by reason of being assigned to any duty requiring intimate contact with persons with Hansen's disease. However, any such officer or employee who was entitled, on January 4, 1986, to receive additional pay by reason of being assigned to full-time duty, for a period of 30 days or more, at a station of the Service devoted to the care of Hansen's disease patients and who continues to be assigned to such duty, shall receive special pay as long as such assignment continues without a break.

(b) Such special pay shall, on any future date, be at an annual dollar level equal to the lower of the levels that would be paid under the following subparagraphs:

(1) 25% of the lowest level of basic pay that he or she has been receiving on any date from January 4, 1986, through that future date;

(2) The amount by which the level of an employee's basic pay plus special pay on January 4, 1986, exceeds the level of that employee's basic pay on that on that future date, except that

the special pay under this subparagraph shall not be less that 12 times the monthly special pay then paid to Commissioned Officers entitled to special pay for duty involving intimate contact with persons who have Hansen's disease. (As of October 24, 1985, that monthly rate was $110.)

(c) An officer or employee may be paid special pay for any pay period, under paragraphs (a) and (b) of this section, only to the extent that it does not cause his or her aggregate pay for that pay period to exceed the biweekly rate of basic pay for Level V of the Executive Schedule. As used in this paragraph, ''aggregate pay'' comprises basic pay, this special pay, and premiums for overtime, nightwork, irregular duty, standby status, and Sunday or holiday work.

[50 FR 43146, Oct. 24, 1985]

SPECIAL CONSULTANTS

§ 22.3 Appointment of special consultants.

(a) When the Public Health Service requires the services of consultants who cannot be obtained when needed through regular Civil Service appointment or under the compensation provisions of the Classification Act of 1949, special consultants to assist and advise in the operations of the Service may be appointed, subject to the provisions of the following paragraphs and in accordance with such instructions as may be issued from time to time by the Secretary of Health and Human Services.

(b) Appointments, pursuant to the provisions of this section, may be made by those officials of the Service to whom authority has been delegated by the Secretary or his designee.

(c) The per diem or other rates of compensation shall be fixed by the appointing officer in accordance with criteria established by the Surgeon General.

(Sec. 208(c), 58 Stat. 686, as amended; 42 U.S.C. 209(e); sec. 207(f), 58 Stat. 686 as amended by 62 Stat. 40; 42 U.S.C. 209(f))

[21 FR 9821, Dec. 12, 1956, as amended at 31 FR 12939, Oct. 5, 1966]

§ 22.5 Leave without pay while on detail.

The Secretary or his delegate may, pursuant to section 214(d) of the Public Health Service Act, 42 U.S.C. 215(d), and with the consent of the officer or employee concerned, arrange, through agreements or otherwise, for a civilian officer or employee of the Public Health Service to be placed on leave without pay for the period of a detail to a State, a subdivision thereof, or a private non-profit institution and be paid by the non-Federal organization. Such an arrangement may be for a period of not to exceed 2 years, but may be extended for additional periods of not to exceed 2 years each.

(Sec. 215, 58 Stat. 690, as amended; 42 U.S.C. 216)

[33 FR 18981, Dec. 20, 1968]

PART 23—NATIONAL HEALTH SERVICE CORPS

Subpart A—Assignment of National Health Service Corps Personnel

Sec.

23.1 To what entities does this regulation apply?
23.2 Definitions.
23.3 What entities are eligible to apply for assignment?
23.4 How must an entity apply for assignment?
23.5 What are the criteria for deciding which applications for assignment will be approved?
23.6 What are the criteria for determining the entities to which National Health Service Corps personnel will be assigned?
23.7 What must an entity agree to do before the assignment is made?
23.8 What operational requirements apply to an entity to which National Health Service Corps personnel are assigned?
23.9 What must an entity to which National Health Service Corps personnel are assigned (*i.e.*, a National Health Service Corps site) charge for the provision of health services by assigned personnel?
23.10 Under what circumstances may a National Health Service Corps site's reimbursement obligation to the Federal Government be waived?
23.11 Under what circumstances may the Secretary sell equipment or other property of the United States used by the National Health Service Corps site?
23.12 Who will supervise and control the assigned personnel?

23.13 What nondiscrimination requirements apply to National Health Service Corps sites?

Subpart B—Private Practice Special Loans for Former Corps Members

23.21 Definitions.
23.22 What is the purpose of a private practice loan?
23.23 Who is eligible to receive a private practice option loan?
23.24 In what amounts are loans made?
23.25 How will interest rates for loans be determined?
23.26 How is the loan repaid?
23.27 What happens if scheduled payments are late?
23.28 What events constitute default?
23.29 What happens in the case of a default?
23.30 May the loan be prepaid?
23.31 May loan payments be postponed or waived?
23.32 What conditions are imposed on the use of the loan funds?
23.33 What security must be given for these loans?
23.34 What other conditions are imposed?
23.35 What criteria are used in making loans?

Subpart C—Private Startup Loans

23.41 What conditions are applicable to loans under this subpart?

AUTHORITY: Secs. 333, 338E(c), and 338C(e)(1), Public Health Service Act. 90 Stat. 2272, as amended, 95 Stat. 905, 97 Stat. 1345 (42 U.S.C. 254f *et seq.*), 95 Stat. 912 (42 U.S.C. 254p(c)), 95 Stat. 910 (42 U.S.C. 254n(e)(1)).

SOURCE: 45 FR 12790, Feb. 27, 1980, unless otherwise noted.

Subpart A—Assignment of National Health Service Corps Personnel

§ 23.1 To what entities does this regulation apply?

This regulation applies to the assignment of National Health Service Corps personnel under section 333 *et seq.* of the Public Health Service Act (42 U.S.C. 254f) to provide health services in or to health manpower shortage areas as designated under section 332 of the Public Health Service Act (42 U.S.C. 254e).

§ 23.2 Definitions.

As used in this subpart:

Act means the Public Health Service Act, as amended.

Assigned National Health Service Corps personnel or *Corps personnel* means health personnel of the Regular and Reserve Corps of the Public Health Service Commissioned Corps and civilian personnel as designated by the Secretary including, but not limited to, physicians, dentists, nurses, and other health professions personnel who are assigned under section 333 of the Act and this regulation.

Health manpower shortage area means the geographic area, the population group, the public or nonprofit private medical facility or any other public facility which has been determined by the Secretary to have a shortage of health manpower under section 332 of the Act and its implementing regulation (42 CFR part 5).

National Health Service Corps site means the entity to which personnel have been assigned under section 333 of the Act and this regulation to provide health services in or to health manpower shortage area.

Nonprofit private entity means as entity which may not lawfully hold or use any part of its net earnings to the benefit of any private shareholder or individual and which does not hold or use its net earnings for that purpose.

Secretary means the Secretary of Health and Human Services and any other officer or employee of that Department to whom the authority involved has been delegated.

§ 23.3 What entities are eligible to apply for assignment?

Any public or nonprofit private entity which is located in a health manpower shortage area, or has a demonstrated interest in the shortage area, may apply for the assignment of National Health Service Corps personnel.

§ 23.4 How must an entity apply for assignment?

(a) An application for the assignment of National Health Service Corps personnel must be submitted to the Secretary by an eligibe applicant in the form and at the time prescribed by the

Secretary.[1] The application must be signed by an individual authorized to act for the applicant and to assume on behalf of the applicant the obligations imposed by law, the Act, this regulation, and any additional conditions of assignment imposed under these authorities.

(b) In addition to other pertinent information required by the Secretary, an application for the assignment of Corps personnel must include—

(1) A description of the applicant's overall organizational structure;

(2) A justification of the request for the assignment of personnel based upon the needs of the health manpower shortage area;

(3) A description of the applicant's financial plan for operating the National Health Service Corps site including a proposed budget, sources of non-Federal support obtained, and the proposed expenditures for obtaining adequate support staff, equipment and supplies;

(4) A list of the proposed fees and discounted fees to be charged for the provision of health services; and

(5) If an entity wishes to request an interest free loan (not to exceed $50,000) under section 335(c) of the Act to assist the applicant in establishing the practice of the assigned National Health Service Corps personnel, a detailed justification of the amount requested must be included.

(c) An application for assignment must include evidence that the applicant has provided a copy of the completed application for review to (1) each health systems agency designated under section 1515 of the Act for the health service area which includes all or part of the health manpower shortage area for which as assignment of National Health Service Corps personnel is sought or (2) if no health systems agency has been designated for such a health service area, to each State health planning and development agency designated under section 1521 of the Act for each State which includes all or part of the health manpower shortage area for which an assignment of National Health Service Corps personnel is sought.

(d) If an application for assignment is filed by an applicant which had previously been assigned National Health Service Corps personnel under an agreement entered into under section 329 of the Act as in effect before October 1, 1977, or under section 334 of the Act, the applicant must provide the information the Secretary considers necessary to make the determinations required by section 333(a)(1)(D) of the Act.

[45 FR 12790, Feb. 27, 1980, as amended at 51 FR 31948, Sept. 8, 1986]

§ 23.5 What are the criteria for deciding which applications for assignment will be approved?

(a) In approving or disapproving an application for assignment of Corps personnel, the Secretary will consider, among other pertinent factors:

(1) The applicant's ability and plans to meet the operational requirements in § 23.8.

(2) The administrative and managerial capability of the applicant.

(3) The soundness of the applicant's financial plan for operating the National Health Service Corps site.

(4) The extent to which community resources will be used in operating the National Health Service Corps site.

(5) Comments received from any designated health systems agency or any designated State health planning and development agency to which an application was submitted for review under § 23.4(c).

(6) Comments received from health professional societies serving the health manpower shortage area.

(b) Special consideration for the assignment of Corps personnel will be given to the entity which is located in a health manpower shortage area over an entity which is not located in a health manpower shortage area but has a demonstrated interest in it.

§ 23.6 What are the criteria for determining the entities to which National Health Service Corps personnel will be assigned?

(a) The Secretary may, upon approving an application for the assignment of personnel and after entering into an

[1] Applications and instructions may be obtained from Regional Offices of the Department of Health and Human Services at the addresses set forth at 45 CFR 5.31(b).

agreement with an applicant under § 23.7, assign National Health Service Corps personnel to provide health services in or to a health manpower shortage area.

(b) In assigning National Health Service Corps personnel to serve in a health manpower shortage area, the Secretary will seek to assign personnel who have those characteristics which will increase the probability of their remaining to serve in the health manpower shortage area upon completion of the period of assignment. In addition, the Secretary will apply a weighted-value system in which the first factor listed below is assigned the greatest weight and the second, and third factors are assigned lesser weights in descending order:

(1) The need of the health manpower shortage area as determined by criteria established under section 332(b) of the Act.

(2) The willingness of individuals, government agencies, or health entities within the health manpower shortage area to cooperate with the National Health Service Corps in providing effective health services.

(3) The comments of health professional societies serving the health manpower shortage area.

[45 FR 12790, Feb. 27, 1980, as amended at 51 FR 31948, Sept. 8, 1986]

§ 23.7 What must an entity agree to do before the assignment is made?

(a) *Requirements*. To carry out the purposes of section 334 of the Act, each National Health Service Corps site must enter into an agreement with the Secretary under which the site agrees to:

(1) Be responsible for charging for health services provided by assigned National Health Service Corps personnel;

(2) Take reasonable action for the collection of the charges for those health services;

(3) Reimburse the United States the sums required under section 334 of the Act; and

(4) Prepare and submit an annual report. The agreement will set forth the period of assignment (not to exceed 4 years), the number and type of Corps personnel to be assigned to the site, and other requirements which the Secretary determines necessary to carry out the purposes of the Act.

(b) *Termination*. An agreement entered into under this section may be terminated by either party on 30-days written notice or modified by mutual consent consistent with section 333 of the Act.

[45 FR 12790, Feb. 27, 1980, as amended at 51 FR 31948, Sept. 8, 1986]

§ 23.8 What operational requirements apply to an entity to which National Health Service Corps personnel are assigned?

Each National Health Service Corps site must:

(a) Operate a health care delivery system within a planned or existing community structure to assure:

(1) The provision of high quality comprehensive health care;

(2) To the extent feasible, full professional health care coverage for the health manpower shortage area;

(3) Continuum of care; and

(4) The availability and accessibility of secondary and tertiary health care (the two more sophisticated levels of health care beyond primary care);

(b) Establish and maintain a patient record system;

(c) Implement a system for maintaining the confidentiality of patient records;

(d) Meet the requirements of applicable fire and safety codes;

(e) Develop, to the extent feasible, linkages with other health care facilities for the provision of services which supplement or complement the services furnished by the assigned Corps personnel;

(f) Operate a quality assurance system which meets the requirements of 42 CFR 51c.303(c) for the establishment and operation of a quality assurance system in a community health center; and

(g) Establish basic data, cost accounting, and management information and reporting systems as prescribed by the Secretary.

§ 23.9 What must an entity to which National Health Service Corps personnel are assigned (*i.e.*, a National Health Service Corps site) charge for the provision of health services by assigned personnel?

(a) Except as provided in paragraph (b) of this section, individuals receiving services from assigned National Health Service Corps personnel must be charged on a fee-for-service or other basis at a rate which is computed to permit recovery of the value of the services and is approved by the Secretary.

(b) In determining whether to approve fees to be charged for health services, the Secretary will consider: The costs to the National Health Service Corps of providing the health services; the costs to the health manpower shortage area for providing the services; and the charges for similar services by other practitioners or facilities in or nearby the health manpower shortage area. However, if assigned National Health Service Corps personnel are providing services within the framework of an established health services delivery system, the Secretary may approve the fees charged under that system without regard to the foregoing factors.

(c)(1) No charge or a nominal charge will be made for health services provided by assigned National Health Service Corps personnel to individuals within the health manpower shortage area with annual incomes at or below the ''CSA Income Poverty Guidelines'' (45 CFR 1060.2). However, no individual will be denied health services based upon inability to pay for the services. Any individual who has an annual income above the ''CSA Income Poverty Guidelines,'' but whose income does not exceed 200 percent of the CSA levels, will receive health services at a nominal charge. However, charges will be made for services to the extent that payment will be made by a third party which is authorized or under legal obligation to pay the charges.

(2) The provisions of this paragraph also apply with respect to services provided by an individual who is fulfilling an NHSC scholarship obligation under section 753 or who received a special grant under section 755.

§ 23.10 Under what circumstances may a National Health Service Corps site's reimbursement obligation to the Federal Government be waived?

(a) The Secretary may waive in whole or in part the reimbursement requirements of section 334(a)(3) of the Act if he determines that:

(1) The National Health Service Corps site is financially unable to meet the reimbursement requirements or that compliance with those requirements will unreasonably limit the ability of the site to adequately support the provision of services by assigned Corps personnel. In making these determinations, the Secretary will consider—

(i) The costs necessary to adequately support the health services provided by the assigned National Health Service Corps personnel and the income and financial resources available to meet the costs;

(ii) The ability of the applicant to obtain credit from suppliers, lending institutions, private organizations and individuals;

(iii) The need of the health manpower shortage area for health services; and

(iv) The extent to which the National Health Service Corps site utilizes health professions personnel.

(2) A significant percentage of the individuals who are located in the health manpower shortage area and are receiving the health services of the assigned National Health Service Corps personnel are elderly, living in poverty, or have other characteristics which indicate an inability to pay. For purposes of this section, ''elderly'' means persons 65 years or older and the ''CSA Income Poverty Guidelines'' will be used as the standard for determining whether individuals are living in poverty. Other characteristics indicating inability to pay include, but are not to be limited to, the ratio of unemployment in the health manpower shortage area and the area's cost-of-living index.

(b) The Secretary may waive in whole or in part the reimbursement requirements of section 334(f)(1) of the Act if he or she determines that the National Health Service Corps site is a small health center (as defined by section 334(f)(5) of the Act) that needs all

or part of the amount otherwise payable to—

(1) Expand or improve its provision of health services;

(2) Increase the number of individuals served;

(3) Renovate or modernize facilities for its provision of health services;

(4) Improve the administration of its health service programs; or

(5) Establish a financial reserve to assure its ability to continue providing health services;

(c) Where the Secretary determines that a National Health Service Corps site is eligible for a waiver under paragraph (a) (1) or (2) of this section. the Secretary may waive the application of the reimbursement requirements of section 334(a)(3) of the Act and apply the reimbursement requirements of section 334(f)(1) of the Act. The Secretary may waive in whole or in part the reimbursement requirements of section 334(f)(1) for such a site if he or she determines that the National Health Service Corps site meets the requirements of paragraph (a)(1) of this section. Funds retained by a National Health Service Corps site as a result of such waiver must be used for the purposes set forth in paragraphs (b) (1) through (5) of this section.

(d) Requests for a prospective or retrospective waiver must be made at the time and in the manner and contain the documentation prescribed by the Secretary.

[45 FR 12790, Feb. 27, 1980, as amended at 51 FR 31948, Sept. 8, 1986]

§ 23.11 Under what circumstances may the Secretary sell equipment or other property of the United States used by the National Health Service Corps site?

(a) Upon expiration of the assignment of all Corps personnel to a health manpower shortage area, the Secretary may sell equipment and other property of the United States used by the assigned personnel. The equipment may be sold at the fair market value or less than the fair market value to any entity providing health services in or to a health manpower shortage area if the Secretary determines that an entity is unable to pay the fair market value. In determining whether an entity is financially unable to purchase equipment or property at fair market value, the Secretary will consider (1) the present financial resources of the entity available to purchase the equipment or property based upon its current liabilities, and (2) the entity's ability to obtain the funds necessary to purchase the equipment or property. However, the Secretary will not sell the equipment or property for less than fair market value to a profitmaking organization unless the organization gives reasonable assurance that it will use the equipment or property to provide health services in or to the health manpower shortage area.

(b) The Secretary will give priority to sales to an entity providing reasonable assurance that it will use the equipment or property for the purpose of retaining within the health manpower shortage area National Health Service Corps personnel who have completed their assignments.

§ 23.12 Who will supervise and control the assigned personnel?

Assigned National Health Service Corps personnel will at all times remain under the direct supervision and control of the Secretary. Observance of institutional rules and regulations by the assigned personnel is a mere incident of the performance of their Federal functions and does not alter their direct professional and administrative responsibility to the Secretary.

§ 23.13 What nondiscrimination requirements apply to National Health Service Corps sites?

National Health Service Corps sites are advised that in addition to complying with the terms and conditions of this regulation, the following laws and regulations are applicable—

(a) Title VI of the Civil Rights Act of 1964 (43 U.S.C. 2000d *et seq.*) and its implementing regulations, 45 CFR part 80 (prohibiting discrimination in federally assisted programs on the grounds of race, color, or national origin); and

(b) Section 504 of the Rehabilitation Act of 1973 (29 U.S.C. 794) and its implementing regulations, 45 CFR part 84 (prohibiting discrimination in federally assisted programs on the basis of handicap).

(c) The Age Discrimination Act of 1975 (42 U.S.C. 6101 *et seq.)* and its implementing regulations, 45 CFR part 91 (prohibiting nondiscrimination on the basis of age in HHS programs or activities receiving Federal financial assistance).

[45 FR 12790, Feb. 27, 1980, as amended at 49 FR 38109, Sept. 27, 1984]

Subpart B—Private Practice Special Loans for Former Corps Members

SOURCE: 51 FR 31948, Sept. 8, 1986, unless otherwise noted.

§ 23.21 Definitions.

As used in this subpart, terms have the same meanings as those given to them in subpart A, § 23.2. In addition:

National Health Service Corps scholarship recipient means an individual receiving a scholarship under the Public Health and National Health Service Corps Scholarship Training Program authorized by section 225 of the Act as in effect on September 30, 1977, and repealed on October 1, 1977, or a scholarship under the NHSC Scholarship Program authorized by section 338A of the Act, formerly section 751 of the Act.

Private full-time clinical practice means the provision of ambulatory clinical services for a minimum of 40 hours per week for at least 45 weeks a year, including the provision of hospital coverage services appropriate to meet the needs of patients treated and to assure continuity of care. The 40 hours per week must be performed in no less than 4 days per week with no more than 12 hours of work being performed in any 24-hour period.

§ 23.22 What is the purpose of a private practice loan?

The purpose of the private practice loan is to assist NHSC scholarship recipients in establishing private full-time clinical practices in designated health manpower shortage areas.

§ 23.23 Who is eligible to receive a private practice option loan?

(a) Eligibility for loans is limited to NHSC scholarship recipients who have completed at least 2 years of their service obligations at a NHSC site. NHSC scholarship recipients remain eligible for loans under this subpart for 1 year after they have completed their service obligations at a NHSC site.

(b) Scholarship recipients who are in arrears 31 days or more on a Health Professions Student Loan (42 U.S.C. 294m *et seq.*), Health Education Assistance Loan (42 U.S.C. 294, *et seq.*), Nursing Student Loan (42 U.S.C. 297a *et seq.*), or any other Federally guaranteed or direct student loan are ineligible for this loan program.

(c) NHSC scholarship recipients who have received loans under either this subpart or subpart C of this part are ineligible for loans under this subpart.

§ 23.24 In what amounts are loans made?

The Secretary may make loans either in the amount of $12,500, if the recipient agrees to practice in accordance with the loan agreement for a period of at least 1 year but less than 2 years, or $25,000, if the recipient agrees to practice in accordance with the loan agreement for a period of at least 2 years.

§ 23.25 How will interest rates for loans be determined?

Interest will be charged at the Treasury Current Value of Funds (CVF) rate in effect on April 1 immediately preceding the date on which the loan is approved and will accrue from the date the loan funds are disbursed to the borrower.

§ 23.26 How is the loan repaid?

Payments shall be made at monthly intervals, beginning 1 month from the date of the loan disbursement, in accordance with the repayment schedule established by the Secretary and set forth in the loan agreement. Only interest payments are required during the first 2 years. The repayment schedule may be extended in accordance with § 23.31(a).

§ 23.27 What happens if scheduled payments are late?

(a) Failure to make full payment of principal and/or interest when due will subject the borrower to the assessment of administrative costs and penalty

charges, in addition to the regular interest charge, in accordance with 45 CFR part 30.

(b) Failure to make full payment of principal and/or interest when due may result in the Secretary placing the borrower in default of the loan. See § 23.28(a).

§ 23.28 What events constitute default?

The following events will constitute defaults of the loan agreement:

(a) Failure to make full payment of principal and/or interest when due, and continuance of that failure for a period of sixty (60) days, or a lesser period of time if the Secretary determines that more immediate action is necessary in order to protect the interests of the Government.

(b) Failure to perform or observe any of the terms and conditions of the loan agreement and continuance of that failure for a period of sixty (60) days.

(c) The institution of bankruptcy proceedings, either voluntary or involuntary, under any State or Federal statute, which may adversely affect the borrower's ability to comply with the terms and conditions of the agreement or the promissory note.

§ 23.29 What happens in the case of a default?

(a) In the event of default, the Secretary may declare the entire amount owed (including principal, accrued interest and any applicable charges) immediately due and payable. Collection of the amount owed will be made in accordance with 45 CFR part 30.

(b) The borrower is not entitled to written notice of any default and the failure to deliver written notice of default in no way affects the Secretary's right to declare the loan in default and take any appropriate action under the loan agreement or the promissory note.

(c) The failure of the Secretary to exercise any remedy available under law or regulation shall in no event be construed as a waiver of his or her right to exercise that remedy if any subsequent or continued default or breach occurs.

§ 23.30 May the loan be prepaid?

The borrower shall have the option to prepay the balance of any part of the loan, together with accrued interest, at any time without prepayment penalty.

§ 23.31 May loan payments be postponed or waived?

(a) Whenever health, economic, or other personal problems affect the borrower's ability to make scheduled payments on the loan, the Secretary may allow the borrower an extension of time or allow the borrower to make smaller payments than were previously scheduled; however, interest will continue to accrue at the rate specified in the promissory note until the loan is repaid in full. The loan must be fully repaid within 10 years after it was made.

(b) No waiver, full or partial, of repayment of the loan will be granted; except that the obligation of a borrower to repay a loan shall be cancelled upon the death or total and permanent disability of the borrower, as determined by the Secretary.

(c) In order to make a determination under paragraph (a) or (b) of this section, the Secretary may require supporting medical, financial, or other documentation.

§ 23.32 What conditions are imposed on the use of the loan funds?

(a) The borrower must use the total amount of the loan to purchase or lease, or both, equipment and supplies, to hire authorized personnel to assist in providing health services and/or to renovate facilities for use in providing health services in his or her private practice. Equipment and supplies purchased and/or leased, personnel hired and facilities renovated shall be limited to the items requested in the loan application and approved by the Secretary.

(b) The borrower must expend the loan funds within 6 months from the date of the loan or within such other time as the Secretary may approve. Documentation of the expenditure of funds must be furnished to the Secretary upon request.

§ 23.33 What security must be given for these loans?

The Secretary may require the borrower to pledge to the Secretary a security interest in specified collateral.

§ 23.34 What other conditions are imposed?

(a) The borrower must sign a loan agreement describing the loan and practice conditions, and a promissory note agreeing to repay the loan plus interest.

(b) The borrower must agree to enter into private full-time clinical practice in a HMSA for the time period specified in the loan agreement.

(c) The borrower must accept assignment, for the time period specified in the loan agreement, under section 1842(b)(3)(B)(ii) of the Social Security Act as full payment for all services for which payment may be made under part B of title XVIII of that Act.

(d) The borrower must enter into an appropriate agreement, for the time period specified in the loan agreement, with the State agency which administers the State plan for medical assistance under title XIX of the Social Security Act to provide services to individuals entitled to medical assistance under the plan.

(e) During the time period specified in the loan agreement, the borrower must provide health services to individuals at the usual and customary rate prevailing in the HMSA in which services are provided; however, services must be provided at no charge or at a nominal charge to those persons unable to pay for these services.

(f) The borrower must keep and preserve all documents, including bills, receipts, checks, and correspondence which affect the operation of the private practice and the expenditure of loan funds for the period of the practice obligation specified in the loan agreement plus 3 years. Accounts will be maintained under one of the accounting principles identified by the Secretary in the loan agreement.

(g) The borrower must provide the Secretary and the Controller General of the United States, or their representatives, access during normal working hours to accounts, documents, and records for the purposes of audit or evaluation; and must permit the Secretary or his or her representative to inspect the private practice at reasonable times during the period of the practice obligation specified in the loan agreement plus 3 years. All information as to personal facts and circumstances about recipients of services shall be held confidential, and shall not be divulged without the individual's consent except as may be required by law or as may be necessary to provide medical service to the individual or to provide for medical or fiscal audits by the Secretary or his or her designee with appropriate safeguards for confidentiality of records.

(h) For the entire period of loan repayment, the borrower must acquire, maintain, and when requested, must provide the Secretary with copies of policies of insurance on equipment and supplies in amounts adequate to reasonably protect the borrower from risk, including public liability, fire, theft, and worker's compensation.

(i) If the Secretary retains a security interest pursuant to § 23.33, the borrower must keep and preserve all documents which affect that security interest for the period of the loan repayment and allow the Secretary or his or her designee access, during normal working hours, to those documents.

(j) The borrower must maintain the loan proceeds in a separate account from his or her other transactions and must agree to draw upon this account and expend the loan proceeds in accordance with § 23.32.

(k) The Secretary may impose other conditions which he or she deems appropriate under law or regulation to protect the Government's interests.

§ 23.35 What criteria are used in making loans?

Approval of loan applications will be based on the criteria set forth below:

(a) The need in the HMSA for the applicant's health profession as determined under section 332 of the Act;

(b) The applicant's need for the loan funds; and

(c) The comments from State or local health professional societies on the appropriateness of the applicant's intended private practice; and

(d) The applicant's credit worthiness and projected financial ability to repay the loan.

Subpart C—Private Startup Loans

§ 23.41 What conditions are applicable to loans under this subpart?

The regulations set out in subpart B of this part are fully applicable to loans awarded under section 338C(e)(1) of the Public Health Service Act, except as noted below;

(a) *Eligibility*. (1) In lieu of § 23.23(a), the following applies to loans made under this subpart:

(i) Eligibility for loans is limited to NHSC scholarship recipients who plan to enter private practice and have not begun fulfilling their scholarship service obligation or are currently fulfilling their scholarship service obligation under section 338B of the Act and have completed less than 2 years of this obligation.

(2) In lieu of § 23.23(c), the following applies to loans made under this subpart:

(i) NHSC scholarship recipients who have received loans under either this subpart or subpart B of this part are ineligible for loans under this subpart.

(b) *Loan amounts*. (1) In lieu of § 23.24, the following applies to loans made under this subpart:

(i) The Secretary may make loans in the amount of $12,500 if the recipient agrees to practice in accordance with the loan agreement for a period of at least 1 year but less than 2 years or the remaining period of the borrower's NHSC scholarship service obligation, whichever is shorter.

(ii) The Secretary may make loans in the amount of $25,000 if the recipient agrees to practice in accordance with the loan agreement for a period of at least 2 years or the remaining period of the borrower's NHSC scholarship service obligation, whichever is shorter.

(c) *Use of funds*. (1) In lieu of § 23.32(a), the following applies to loans made under this subpart:

(i) The borrower must use the total amount of the loan only to purchase or lease, or both, the equipment and supplies needed for providing health services in his or her private practice. Equipment and supplies purchased and/or leased shall be limited to the items requested in the loan application and approved by the Secretary.

[51 FR 31950, Sept. 8, 1986]

PART 24—SENIOR BIOMEDICAL RESEARCH SERVICE

Sec.
24.1 Establishment.
24.2 Allocation.
24.3 Policy Board.
24.4 Eligibility.
24.5 Peer review.
24.6 Pay and compensation.
24.7 Performance appraisal system.
24.8 Applicability of provisions of Title 5, U.S. Code.
24.9 Removal from the Service.
24.10 Reporting.

AUTHORITY: Section 228(g) of the Public Health Service Act; 5 U.S.C. 301.

SOURCE: 61 FR 6557, Feb. 21, 1996, unless otherwise noted.

§ 24.1 Establishment.

There is established in the Public Health Service (PHS) a Senior Biomedical Research Service (SBRS) consisting of members the maximum number of which is prescribed by law.

§ 24.2 Allocation.

(a) The Secretary, within the number authorized in the PHS Act, shall determine the number of SBRS slots to be allocated to each participating Operating Division.

(b) The SBRS Policy Board may advise the Secretary to make adjustments to the allocation at any time.

(c) The majority of the SBRS allocation is to be reserved for recruitment. The remaining SBRS allocation may be used for the retention of current employees.

(d) SBRS slots will be used judiciously, resulting in SBRS appointments only where other senior-level appointing authorities are not sufficient to recruit or retain scientific talent.

(e) The Secretary will ensure that SBRS slots are used in support of high priority programs authorized by Congress and which directly support the research goals and priorities of the Department.

§ 24.3 Policy Board.

The Secretary or his/her designee shall establish an SBRS Policy Board to serve in an advisory capacity, recommending SBRS allocations among the participating Operating Divisions,

reviewing the operations of the SBRS and ensuring consistent application of regulations, policies, and procedural guidelines, and recommending changes to the Secretary as necessary. Membership, to the extent possible, will include SBRS eligibles nominated by their respective Operating Divisions, will be weighted in proportion to Operating Divisions' SBRS allocations, and will include representation from the Office of the Secretary. The Secretary or his/her designee will select the board membership and the Chair.

§ 24.4 Eligibility.

To be eligible for appointment to the Service an individual must have a doctoral-level degree in biomedicine or a related field and must meet the qualification standards prescribed by the U.S. Office of Personnel Management for appointment to a position at GS–15 of the General Schedule. In addition, the individual must be outstanding in the field of biomedical research or clinical research evaluation. Appointment to the Service will be made only to individuals actively engaged in either biomedical research or clinical research evaluation.

(a) Outstanding in the field of biomedical research means an individual who is actively engaged in peer-reviewed original biomedical research and whose work in this area is considered by his or her peers to be outstanding. In order to meet the eligibility criteria, an individual must have conducted original peer-reviewed biomedical research resulting in major accomplishments reflected by a steady and current record of highly cited publications in peer-reviewed journals of high stature. In addition, the individual should be the recipient of major prizes and awards (such as visiting professorships and named lectureships) in recognition of original contributions to research.

(b) Outstanding in the field of clinical research evaluation means that an individual is actively engaged in clinical research evaluation and is considered by his or her peers to be outstanding. In order to meet the eligibility criteria, an individual, by force of his or her own technical expertise, must be in a position to shape the course of drug or device evaluation or exert a similar influence on the PHS handling of other agents that may affect the public health. The individual would normally have dealt with complex, precedent-setting evaluation issues that involved significant scientific controversy, had far reaching implications for clinical research or resulted in a widespread economic effect in the health-care delivery system. In addition, the individual should have been involved in the development of scientific or regulatory guidelines for clinical research and been the recipient of invitations to speak at or to chair major national or international meetings and symposia.

§ 24.5 Peer review.

An individual may not be considered for appointment into the SBRS unless his/her qualifications have been reviewed by a PHS peer review committee and the committee has recommended appointment to the Service.

§ 24.6 Pay and compensation.

The SBRS is an ungraded system, with a single, flexible pay range to include all members.

(a) Pay of the members of the Service shall be determined by the Secretary or his/her designee.

(b) The pay of a member of the Service shall be not less than the minimum rate payable for GS–15 of the General Schedule and shall not exceed:

(1) The rate payable for level I of the Executive Schedule unless a higher rate of pay is expressly approved on an individual basis by the President, pursuant to 5 U.S.C. 5377(d)(2), or

(2) The rate payable for level II of the Executive Schedule unless a higher rate of pay is expressly approved on an individual basis by the Secretary.

(c) While the full pay range will be used, individual pay at the higher end of the range will be used only as needed to recognize individual scientific value and as necessary to recruit or retain an exceptionally well-qualified scientist.

(d) The following factors will be used in establishing appropriate pay rates for individual members:

(1) Impact of the individual on the scientific field;

(2) Recognition of the individual by the scientific community;

(3) Originality of the individual's ideas/work products;

(4) Specific ''clinical'' or highly technical skills of the individual which are of benefit to the agency and which are in addition to requirements of the basic scientific assignment;

(5) The individual's earnings and monetary benefits;

(6) Salary surveys of similar skills in pertinent labor markets; and

(7) Other relevant factors.

(e) Annual adjustments to pay rates may be made effective on the first day of the first pay period on or after January 1 of each calendar year. The rate of such adjustments will be at the discretion of the Secretary or his/her designee, except that the minimum rate payable in the SBRS will be increased to the amount of the minimum rate of the GS–15 of the General Schedule.

(f) Other pay adjustments will be made on an individual basis by the Secretary or his/her designee.

(g) Except as provided in paragraph (h) of this section, new appointees to the Service, who are not covered by the Civil Service Retirement System, will be covered by the Federal Employees Retirement System.

(h) Upon the request of a member who performed service in the employ of an institution of higher education immediately prior to his appointment as a member of the Service, and retains the right to make contributions to the retirement system of such institution, the Department of Health and Human Services may contribute an amount not to exceed ten percent per annum of the member's basic pay to such institution's retirement system on behalf of such member. A member who participates in this program shall not be covered by any retirement system established for employees of the United States under title 5, United States Code.

§ 24.7 Performance appraisal system.

The members of the Service shall be subject to a performance appraisal system which shall be designed to encourage excellence in performance and shall provide for a periodic and systematic appraisal of the performance of the members.

§ 24.8 Applicability of provisions of Title 5, U.S. Code.

(a) Appointments to the Service shall be made without regard to the provisions of title 5, U.S. Code regarding appointments.

(b) Members of the Service shall not be covered by the following provisions of title 5, U.S. Code:

(1) Subchapter I of Chapter 35 (relating to retention preference in the event of reduction in force);

(2) Chapter 43, Performance Appraisal (and performance-based actions);

(3) Chapter 51 (relating to classification);

(4) Subchapter III of Chapter 53, The General Schedule; and

(5) Chapter 75, Adverse Actions.

(c) Other provisions of Title 5 will be applied as administratively determined by the Secretary or his/her designee.

§ 24.9 Removal from the Service.

(a) A member of the Service may be subject to disciplinary action, including removal from the Service, for substandard performance of duty as a member of the service, for misconduct, for reasons of national security or for other reasons as determined by the Secretary.

(b) A member for whom disciplinary action is proposed is entitled to:

(1) Written notice of the proposed action and the basis therefor;

(2) A reasonable opportunity to answer the notice of proposed action both orally and in writing;

(3) The right to be represented by an attorney or other representative in making such answer; and

(4) A written decision on the proposal.

(c) The decision may be made by an official with delegated authority to take such action, but in no case may the official be at a level below the head of the Operating Division where the member is assigned.

(d) A member who is separated from the Service involuntarily and without cause and who, immediately prior to his appointment to the Service, was a career appointee in the civil service or the Senior Executive Service, may be

appointed to a position in the competitive civil service at grade GS–15 of the General Schedule. Such an appointment may be made by the Secretary or his/her designee without regard to the provisions of title 5, U.S. Code regarding appointments in the civil service.

(e) A member who is separated from the Service involuntarily and without cause and who, immediately prior to appointment to the Service, was not a career appointee in the civil service or the Senior Executive Service may be appointed to a position in the excepted civil service at grade GS–15 of the General Schedule for a period not to exceed two years.

(f) There shall be no right to further review of the final decision on a disciplinary action. At his/her discretion, the Secretary may review an action taken under this section and may reduce, suspend, or overrule the action taken.

(g) A member of the Service may be removed from the Service for such other reasons as may be prescribed by the Secretary.

§ 24.10 Reporting.

For each quarter of the first year of implementation and annually thereafter, participating Operating Divisions shall maintain reports on the operation of the SBRS. At a minimum, these reports should include the number of appointees, the source of those appointees, their earnings immediately prior to appointment, and their SBRS pay at appointment.

SUBCHAPTER C—MEDICAL CARE AND EXAMINATIONS

PART 31—MEDICAL CARE FOR CERTAIN PERSONNEL OF THE COAST GUARD, NATIONAL OCEAN SURVEY, PUBLIC HEALTH SERVICE, AND FORMER LIGHTHOUSE SERVICE

DEFINITIONS

Sec.
31.1 Meaning of terms.

PROVISIONS APPLICABLE TO COAST GUARD, NATIONAL OCEAN SURVEY AND PUBLIC HEALTH SERVICE

31.2 Persons entitled to treatment.
31.3 Use of Service facilities.
31.4 Use of other than Service facilities.
31.5 Application for treatment; active duty personnel.
31.6 Personnel absent without leave.
31.7 Continuance of medical relief after loss of status.
31.8 Retired personnel; extent of treatment.
31.9 Dependent members of families; treatment.
31.10 Dependent members of families; use of Service facilities.

PROVISIONS APPLICABLE TO PERSONNEL OF FORMER LIGHTHOUSE SERVICE

31.11 Persons entitled to treatment.
31.12 Use of Service facilities.
31.13 Use of other than Service facilities.
31.14 Application for treatment; active duty personnel.
31.15 Continuance of medical relief after loss of status.
31.16 Retired personnel; extent of treatment.

SOURCE: 21 FR 9821, Dec. 12, 1956, unless otherwise noted.

DEFINITIONS

§ 31.1 Meaning of terms.

As used in this part, the term:

(a) *Act* means the Public Health Service Act, approved July 1, 1944, 58 Stat. 682, as amended.

(b) *Service* means the Public Health Service.

(c) *Surgeon General* means the Surgeon General of the Public Health Service.

(d) *Medical relief station* means a first-, second-, third-, or fourth-class station of the Service.

(e) *First-class stations* means a hospital operated by the Service.

(f) *Second-class station* means a medical relief facility, other than a hospital of the Service, under the charge of a commissioned officer.

(g) *Third-class station* means a medical relief facility, other than a hospital of the Service, under the charge of a medical officer or employee of the Service other than a commissioned officer.

(h) *Fourth-class station* means a medical relief facility designated by the Surgeon General, other than a first-, second-, or third-class station.

(i) *Designated physician* means a physician holding an appointment to act regularly for the Service for a class or classes of specified beneficiaries at a place where there is no medical relief station.

(j) *Designated dentist* means a dentist holding an appointment to perform dental service for the Service for a class or classes of specified beneficiaries.

(k) *Active duty* means active duty status as distinguished from being on inactive status or retired and includes periods of authorized leave or liberty.

(l) *Dependent members of families* in the case of male personnel means the lawful wife, the unmarried children (including stepchildren or adopted children) under 21 years of age, and the father or mother if in fact dependent upon such son for his or her chief support; and in the case of female personnel, the unmarried children (including stepchildren or adopted children) under 21 years of age if their father is dead or they are in fact dependent on such mother for their chief support, the father or mother if in fact dependent upon such daughter for his or her chief support, and the husband if in fact dependent upon such wife for his chief support: *Provided*, *however*, That in the case of members of the Women's Reserve of the Coast Guard the husbands of such members shall not be considered dependents.

(Sec. 215, 58 Stat. 690, as amended; 42 U.S.C. 216)

PROVISIONS APPLICABLE TO COAST GUARD, NATIONAL OCEAN SURVEY AND PUBLIC HEALTH SERVICE

§ 31.2 Persons entitled to treatment.

To the extent and under the circumstances prescribed in §§ 31.2 to 31.10, the following persons shall be entitled to medical, surgical, and dental treatment and hospitalization by the Service:

(a) *Coast Guard*. (1) Commissioned officers, chief warrant officers, warrant officers, cadets, and enlisted personnel of the Regular Coast Guard, including those on shore duty and those on detached duty, whether on active duty or retired;

(2) Regular members of the Coast Guard Reserve when on active duty or when retired for disability;

(3) Temporary members of the Coast Guard Reserve when on active duty or in case of physical injury incurred or sickness or disease contracted while performing active Coast Guard duty;

(4) Members of the Women's Reserve of the Coast Guard when on active duty or when retired for disability;

(5) Members of the Coast Guard Auxiliary in case of physical injury incurred or sickness or disease contracted while performing active Coast Guard duty.

(b) *National Ocean Survey*. Commissioned officers, ships' officers, and members of the crews of vessels of the National Ocean Survey, including those on shore duty and those on detached duty whether on active duty or retired.

(c) *Public Health Service*. (1) Commissioned officers of the Regular Corps of the Service, whether on active duty or retired;

(2) Commissioned officers of the Reserve Corps of the Service when on active duty or when retired for disability.

(Sec. 326, 58 Stat. 697, as amended 42 U.S.C. 253)

§ 31.3 Use of Service facilities.

Except as otherwise provided in §§ 31.3 to 31.10, the persons specified in § 31.2 shall be entitled to medical, surgical, and dental treatment and hospitalization only at medical relief stations and by designated physicians and designated dentists, and the cost of services procured elsewhere shall not be borne by the Service.

(Sec. 326, 58 Stat. 697, as amended 42 U.S.C. 253)

§ 31.4 Use of other than Service facilities.

(a) When a person specified in § 31.2 who is on active duty requires immediate medical, surgical, or dental treatment or hospitalization and the urgency of the situation does not permit treatment at a medical relief station or by a designated physician or designated dentist, an officer of the same service as the patient may arrange for treatment or hospitalization at the expense of the Service.

(b) When the circumstances are such that an officer of the same service as the patient is not available to make the necessary arrangements, the treatment or hospitalization may be obtained by or on behalf of the patient at the expense of the Service.

(c) In every case of treatment or hospitalization as defined in paragraph (b) of this section, the responsible superior officer of the patient shall be notified as promptly as possible and a full report shall be submitted by such officer to the Surgeon General through appropriate official channels. As soon as practicable, unless the interests of the patient or the Government require otherwise, treatment or hospitalization shall be continued at a medical relief station or by a designated physician or designated dentist or at another appropriate Federal medical facility.

(d) When the necessary medical relief cannot be obtained from a medical relief station or a designated physician or designated dentist, preference shall be given to other Federal medical facilities when reasonably available and when conditions permit.

(e) Vouchers on proper forms covering expenses for treatment or hospitalization under the circumstances specified in paragraphs (a) and (b) of this section shall be forwarded to the Surgeon General through appropriate official channels. Each such voucher shall be accompanied by or contain a statement of the facts necessitating the treatment or hospitalization. Unreasonable charges for emergency

treatment or hospitalization will not be allowed.

(f) Expenses for consultants or special services, or for dental treatment other than emergency measures to relieve pain, shall not be allowed except when authorized in advance by the headquarters of the Service or, in extraordinary cases, when subsequently approved by such headquarters upon receipt of report and satisfactory explanation as to the necessity and urgency therefor.

(Sec. 326, 58 Stat. 697, as amended; 42 U.S.C. 253)

§31.5 Application for treatment; active duty personnel.

(a) An applicant for medical relief who is on active duty shall furnish a certificate identifying him. Such certificate, in the case of Coast Guard personnel, shall be signed by an officer of the Coast Guard, and in the case of National Ocean Survey personnel, shall be signed by an officer of the National Ocean Survey. Commissioned officers of any of the services mentioned in §31.2 and officers in charge of units may sign their own certificates. In an emergency, the officer in charge of a medical relief station, or a designated physician or designated dentist, may accept other evidence of status satisfactory to him.

(b) A temporary member of the Coast Guard Reserve except when on active duty or a member of the Coast Guard Auxiliary shall, when applying for medical relief, furnish a statement signed by a responsible superior officer setting forth the facts and circumstances giving rise to the need for medical relief. In emergencies, such statement shall be furnished promptly after the member has received the immediately required care and treatment. Such statement shall be presumptive evidence of the facts stated, but if investigation indicates that the injury, sickness, or disease was not incurred or contracted in the manner stated, further treatment may be denied.

(Sec. 326, 58 Stat. 697, as amended; 42 U.S.C. 253)

§31.6 Personnel absent without leave.

No member of any of the services enumerated in §31.2 shall be entitled when absent without leave to medical relief except at a medical relief station or by a designated physician or designated dentist.

(Sec. 326, 58 Stat. 697, as amended; 42 U.S.C. 253)

§31.7 Continuance of medical relief after loss of status.

If a member is separated from any of the services enumerated in §31.2, except persons specified in §31.2(a) (3) and (5) who shall be entitled to treatment after separation under the conditions set forth in such paragraphs, while undergoing treatment by the Service, his treatment shall be discontinued immediately unless the physician in charge determines that the condition of the patient does not permit interruption of treatment, in which case the treatment shall be discontinued as soon as practicable and the condition of the patient permits. At that time he shall be discharged from treatment and shall not thereafter be afforded medical relief by the Service by reason of his previous service.

(Sec. 326, 58 Stat. 697, as amended; 42 U.S.C. 253)

§31.8 Retired personnel; extent of treatment.

(a) A retired member of the Coast Guard, National Ocean Survey, or Public Health Service specified in §31.2 shall be entitled to medical, surgical, and dental treatment and hospitalization at medical relief stations of the first-, second-, and third-class, upon presentation of satisfactory evidence of his status.

(b) Elective medical or surgical treatment requiring hospitalization shall be furnished only at hospitals operated by the Service.

(c) Dental treatment shall be furnished to the extent of available facilities only at medical relief stations where full-time dental officers are on duty; at other medical relief stations the dental treatment shall be limited

to emergency measures necessary to relieve pain.

(Sec. 326, 58 Stat. 697, as amended; 42 U.S.C. 253)

§ 31.9 Dependent members of families; treatment.

To the extent and under the circumstances prescribed in this part, the Service shall provide medical advice and outpatient treatment at first-, second-, and third-class medical relief stations and hospitalization at first-class stations to the dependent members of families of the following persons:

(a) *Coast Guard*. Commissioned officers, chief warrant officers, warrant officers, cadets, and enlisted personnel of the Regular Coast Guard, including those on shore duty and those on detached duty, whether on active duty or retired; and regular members of the United States Coast Guard Reserve and members of the Women's Reserve of the Coast Guard, when on active duty or when retired for disability.

(b) *National Ocean Survey*. Commissioned officers, ships' officers, and members of the crews of vessels of the United States National Ocean Survey, including those on shore duty and those on detached duty, whether on active duty or retired.

(c) *Public Health Service*. Commissioned officers of the Regular Corps of the Service, whether on active duty or retired, and commissioned officers of the Reserve Corps of the Service when on active duty or when retired for disability.

(Sec. 326, 58 Stat. 697, as amended; 42 U.S.C. 253)

§ 31.10 Dependent members of families; use of Service facilities.

(a) A dependent member of the family of any person specified in § 31.9 shall, upon presentation of satisfactory evidence of such status, be entitled to medical advice and out-patient treatment at first-, second-, and third-class medical relief stations and hospitalization at first-class stations if suitable accommodations are available therein and if the condition of the dependent is such as to require hospitalization, both as determined by the medical officer in charge.

(b) Hospitalization at first-class stations shall be at a per diem cost to the officer, enlisted person, member of a crew or other person concerned. Such cost shall be at such uniform rate as may be prescribed from time to time by the President for the hospitalization of dependents of naval and Marine Corps personnel at any naval hospital.

(c) Hospitalization at first-class stations and out-patient treatment at first-, second-, and third-class stations may include such services and supplies as, in the judgment of the medical officer in charge, are necessary for reasonable and adequate treatment.

(d) Dental treatment shall be furnished to the extent of available facilities only at medical relief stations where full-time officers are on duty.

(Sec. 326, 58 Stat. 697, as amended; 42 U.S.C. 253)

PROVISIONS APPLICABLE TO PERSONNEL OF FORMER LIGHTHOUSE SERVICE

§ 31.11 Persons entitled to treatment.

To the extent and under the circumstances prescribed in this part, the following persons shall be entitled to medical, surgical, and dental treatment and hospitalization by the Service: Lightkeepers, assistant lightkeepers, and officers and crews of vessels of the former Lighthouse Service, including any such persons who subsequent to June 30, 1939, have involuntarily been assigned to other civilian duty in the Coast Guard, who were entitled to medical relief at hospitals and other stations of the Service prior to July 1, 1944, and who are now or hereafter on active duty or who have been or may hereafter be retired under the provisions of section 6 of the act of June 20, 1918, as amended (33 U.S.C. 763).

(Sec. 610(b), 58 Stat. 714, as amended; 33 U.S.C. 763c)

§ 31.12 Use of Service facilities.

Except as otherwise provided herein, the persons specified in § 31.11 shall be entitled to medical, surgical, and dental treatment and hospitalization only at medical relief stations and by designated physicians and designated dentists, and the cost of services procured

elsewhere shall not be borne by the Service.

(Sec. 610(b), 58 Stat. 714, as amended; 33 U.S.C. 763c)

§31.13 Use of other than Service facilities.

(a) When a person specified in §31.11 who is on active duty requires immediate medical, surgical, or dental treatment or hospitalization and the urgency of the situation does not permit treatment at a medical relief station or by a designated physician or designated dentist, an officer or other appropriate supervisory official of the Coast Guard may arrange for treatment or hospitalization.

(b) In every such case of treatment or hospitalization, a full report thereof shall be submitted to the Surgeon General through Coast Guard headquarters. As soon as practicable, unless the interests of the patient or the Government require otherwise, treatment or hospitalization shall be continued at a medical relief station or by a designated physician or designated dentist or at another appropriate Federal medical facility.

(c) When the necessary medical relief cannot be obtained from a medical relief station or a designated physician or designated dentist, preference shall be given to other Federal medical facilities when reasonably available and when conditions permit.

(d) Vouchers on proper forms covering expenses for treatment or hospitalization under the circumstances specified in paragraph (a) of this section shall be forwarded to the Surgeon General through Coast Guard headquarters. Each such voucher shall be accompanied by or contain a statement of the facts necessitating the treatment or hospitalization. Unreasonable charges for emergency treatment or hospitalization will not be allowed.

(e) Expenses for consultants or special services, or for dental treatment other than emergency measures to relieve pain, shall not be allowed except when authorized in advance by the headquarters of the Service or, in extraordinary cases, when subsequently approved by such headquarters upon receipt of report and satisfactory explanation as to the necessity and urgency therefor.

(Sec. 610(b), 58 Stat. 714 as amended; 33 U.S.C. 763c)

§31.14 Application for treatment; active duty personnel.

An applicant for medical relief who is on active duty shall furnish a certificate identifying him. Such certificate shall be signed by an officer or other appropriate supervisory official of the Coast Guard. In an emergency, the officer in charge of a medical relief station, or a designated physician or designated dentist, may accept other evidence of status satisfactory to him.

(Sec. 610(b), 58 Stat. 714 as amended; 33 U.S.C. 763c)

§31.15 Continuance of medical relief after loss of status.

If a person is separated while undergoing treatment by the Service, his treatment shall be discontinued immediately unless the physician or dentist in charge determines that the condition of the patient does not permit interruption of treatment, in which case the treatment shall be discontinued as soon as practicable and the condition of the patient permits. At that time he shall be discharged from treatment and shall not thereafter be afforded medical relief by the Service by reason of his previous service.

(Sec. 610(b), 58 Stat. 714, as amended; 33 U.S.C. 763c)

§31.16 Retired personnel; extent of treatment.

(a) Any retired person specified in §31.11 shall be entitled to medical, surgical, and dental treatment and hospitalization at medical relief stations of the first, second, and third class, upon presentation of satisfactory evidence of his status.

(b) Elective medical or surgical treatment requiring hospitalization shall be furnished only at hospitals operated by the Service.

(c) Dental treatment shall be furnished to the extent of available facilities only at medical relief stations where full-time dental officers are on duty; at other medical relief stations the dental treatment shall be limited

to emergency measures necessary to relieve pain.

(Sec. 610(b), 58 Stat. 714, as amended; 33 U.S.C. 763c)

PART 32—MEDICAL CARE FOR PERSONS WITH HANSEN'S DISEASE AND OTHER PERSONS IN EMERGENCIES

DEFINITIONS

Sec.
32.1 Meaning of terms.

BENEFICIARIES

32.6 Persons eligible.

PERSONS WITH HANSEN'S DISEASE

32.86 Admissions to Service facilities.
32.87 Confirmation of diagnosis.
32.88 Examinations and treatment.
32.89 Discharge.
32.90 Notification to health authorities regarding discharged patients.
32.91 Purchase of services for Hansen's disease patients.

NONBENEFICIARIES: TEMPORARY TREATMENT IN EMERGENCY

32.111 Conditions and extent of treatment; charges.

AUTHORITY: Secs. 320, 321 and 322(b), Public Health Service Act (42 U.S.C. 247e, 248 and 249(b)).

SOURCE: 40 FR 25816, June 19, 1975, unless otherwise noted.

DEFINITIONS

§ 32.1 Meaning of terms.

All terms not defined herein shall have the same meaning as given them in the Act.

(a) *Act* means the Public Health Service Act, approved July 1, 1944, 58 Stat. 682, as amended;

(b) *Service* means the Public Health Service;

(c) *Secretary* means the Secretary of Health and Human Services and any other officer or employee of the Department of Health and Human Services to whom the authority involved may have been delegated.

(d) *Authorizing official* means Service officers or employees duly designated by the Director, Bureau of Health Care Delivery and Assistance, to authorize and provide care and treatment to beneficiaries at Service expense.

[40 FR 25816, June 19, 1975, as amended at 48 FR 10318, Mar. 11, 1983]

BENEFICIARIES

§ 32.6 Persons eligible.

(a) Under this part the following persons are entitled to care and treatment by the Service as hereinafter prescribed:

(1) Persons afflicted with Hansen's disease; and

(2) Non-beneficiaries for temporary treatment and care in cases of emergency.

(b) Separate regulations govern: (1) The medical care of certain personnel, and their dependents, of the Coast Guard, National Oceanic and Atmospheric Administration, and Public Health Service (see part 31 of this chapter);

(2) Physical and mental examination of aliens (see part 34 of this chapter); and

(3) Medical care for Native Americans (see part 36 of this chapter).

[48 FR 10318, Mar. 11, 1983]

PERSONS WITH HANSEN'S DISEASE

§ 32.86 Admissions to Service facilities.

Any person with Hansen's disease who presents himself for care or treatment or who is referred to the Service by the proper health authority of any State, Territory, or the District of Columbia shall be received into the Service hospital at Carville, Louisiana, or into any other hospital of the Service which has been designated by the Secretary as being suitable for the accommodation of persons with Hansen's disease.

§ 32.87 Confirmation of diagnosis.

At the earliest practicable date, after the arrival of a patient at the Service hospital at Carville, Louisiana, or at another hospital of the Service the medical staff shall confirm or disprove the diagnosis of Hansen's disease. If the diagnosis of Hansen's disease is confirmed, the patient shall be provided appropriate inpatient or outpatient

treatment. If the diagnosis is not confirmed, the patient shall be discharged.

[40 FR 25816, June 19, 1975; 40 FR 36774, Aug. 22, 1975]

§ 32.88 Examinations and treatment.

Patients will be provided necessary clinical examinations which may be required for the diagnosis of primary or secondary conditions, and such treatment as may be prescribed.

§ 32.89 Discharge.

Patients with Hansen's disease will be discharged when, in the opinion of the medical staff of the hospital, optimum hospital benefits have been received.

§ 32.90 Notification to health authorities regarding discharged patients.

Upon the discharge of a patient the medical officer in charge shall give notification of such discharge to the appropriate health officer of the State, Territory, or other jurisdiction in which the discharged patient is to reside. The notification shall also set forth the clinical findings and other essential facts necessary to be known by the health officer relative to such discharged patient.

§ 32.91 Purchase of services for Hansen's disease patients.

Hansen's disease patients being treated on either an inpatient or outpatient basis at a hospital or clinic facility of the Service, other than the National Center for Hansen's Disease (Carville, Louisiana), may, at the sole discretion of the Secretary and subject to available appropriations, be provided care for the treatment of Hansen's disease at the expense of the Service upon closure or transfer of such hospital or clinic pursuant to section 987 of the Omnibus Budget Reconciliation Act of 1981 (Pub. L. 97–35). Payment will only be made for care arranged for by an authorizing official of the Service as defined in § 32.1(f) of this part.

[46 FR 51918, Oct. 23, 1981]

NONBENEFICIARIES: TEMPORARY TREATMENT IN EMERGENCY

§ 32.111 Conditions and extent of treatment; charges.

(a) Persons not entitled to treatment by the Service may be provided temporary care and treatment at medical care facilities of the Service in case of emergency as an act of humanity.

(b) Persons referred to in paragraph (a) of this section who, as determined by the officer in charge of the Service facility, are able to defray the cost of their care and treatment shall be charged for such care and treatment at the following rates (which shall be deemed to constitute the entire charge in each instance): In the case of hospitalization, at the current interdepartmental reciprocal per diem rate; and, in the case of outpatient treatment, at rates established by the Secretary.

PART 34—MEDICAL EXAMINATION OF ALIENS

Sec.
34.1 Applicability.
34.2 Definitions.
34.3 Scope of examinations.
34.4 Medical notifications.
34.5 Postponement of medical examination.
34.6 Applicability of Foreign Quarantine Regulations.
34.7 Medical and other care; death.
34.8 Reexamination; convening of review boards; expert witnesses; reports.

AUTHORITY: 42 U.S.C. 252; 8 U.S.C. 1182 and 1222.

§ 34.1 Applicability.

The provisions of this part shall apply to the medical examination of:

(a) Aliens applying for a visa at an embassy or consulate of the United States;

(b) Aliens arriving in the United States;

(c) Aliens required by the INS to have a medical examination in connection with determination of their admissibility into the United States; and

(d) Aliens applying for adjustment status.

[56 FR 25001, May 31, 1991]

§ 34.2 Definitions.

As used in this part, terms shall have the following meanings:

(a) *CDC.* Centers for Disease Control, Public Health Service, U.S. Department of Health and Human Services.

(b) *Communicable disease of public health significance.* Any of the following diseases:

(1) Chancroid.

(2) Communicable diseases as listed in a Presidential Executive Order, as provided under Section 361(b) of the Public Health Service Act. The current revised list of quarantinable communicable diseases is available at *http://www.cdc.gov* and *http://www.archives.gov/federal-register*.

(3) Communicable diseases that may pose a public health emergency of international concern if it meets one or more of the factors listed in § 34.3(d) and for which the CDC Director has determined (A) a threat exists for importation into the United States, and (B) such disease may potentially affect the health of the American public. The determination will be made consistent with criteria established in Annex 2 of the revised International Health Regulations (*http://www.who.int/csr/ihr/en/*), as adopted by the Fifty-Eighth World Health Assembly in 2005, and as entered into effect in the United States in July, 2007, subject to the U.S. Government's reservation and understandings:

(i) Any of the communicable diseases for which a single case requires notification to the World Health Organization (WHO) as an event that may constitute a public health emergency of international concern, or

(ii) Any other communicable disease the occurrence of which requires notification to the WHO as an event that may constitute a public health emergency of international concern.HHS/CDC's determinations will be announced by notice in the FEDERAL REGISTER.

(4) Gonorrhea.

(5) Granuloma inguinale.

(6) Leprosy, infectious.

(7) Lymphogranuloma venereum.

(8) Syphilis, infectious stage.

(9) Tuberculosis, active.

(c) *Civil surgeon.* A physician, with not less than 4 years' professional experience, selected by the District Director of INS to conduct medical examinations of aliens in the United States who are applying for adjustment of status to permanent residence or who are required by the INS to have a medical examination.

(d) *Class A medical notification.* Medical notification of:

(1) A communicable disease of public health significance;

(2)(i) A physical or mental disorder and behavior associated with the disorder that may pose, or has posed, a threat to the property, safety, or welfare of the alien or others;

(ii) A history of a physical or mental disorder and behavior associated with the disorder, which behavior has posed a threat to the property, safety, or welfare of the alien or others and which behavior is likely to recur or lead to other harmful behavior; or

(3) Drug abuse or addiction.

(e) *Class B medical notification.* Medical notification of a physical or mental abnormality, disease, or disability serious in degree or permanent in nature amounting to a substantial departure from normal well-being.

(f) *Director.* The Director of the Centers for Disease Control.

(g) *Drug abuse.* The non-medical use of a substance listed in section 202 of the Controlled Substances Act, as amended (21 U.S.C. 802) which has not necessarily resulted in physical or psychological dependence.

(h) *Drug addiction.* The non-medical use of a substance listed in section 202 of the Controlled Substances Act, as amended (21 U.S.C. 802) which has resulted in physical or psychological dependence.

(i) *INS.* Immigration and Naturalization Service, U.S. Department of Justice.

(j) *Medical examiner.* A panel physician, civil surgeon, or other physician designated by the Director to perform medical examinations of aliens.

(k) *Medical hold document.* A document issued to the INS by a quarantine inspector of the Public Health Service at a port of entry which defers the inspection for admission until the cause of the medical hold is resolved.

(l) *Medical notification.* A document issued to a consular authority or the

INS by a medical examiner, certifying the presence or absence of:

(1) A communicable disease of public health significance;

(2)(i) A physical or mental disorder and behavior associated with the disorder that may pose, or has posed, a threat to the property, safety, or welfare of the alien or others;

(ii) A history of a physical or mental disorder and behavior associated with the disorder, which behavior has posed a threat to the property, safety, or welfare of the alien or others and which behavior is likely to recur or lead to other harmful behavior;

(3) Drug abuse or addiction; or

(4) Any other physical abnormality, disease, or disability serious in degree or permanent in nature amounting to a substantial departure from normal well-being.

(m) *Medical officer*. A physician of the Public Health Service Commissioned Corps assigned by the Director to conduct physical and mental examinations of aliens.

(n) *Mental disorder*. A currently accepted psychiatric diagnosis, as defined by the Diagnostic and Statistical Manual of Mental Disorders published by the American Psychiatric Association, or by other authoritative sources.

(o) *Panel physician*. A physician selected by a United States embassy or consulate to conduct medical examinations of aliens applying for visas.

(p) *Physical disorder*. A currently accepted medical diagnosis, as defined by the Manual of the International Classification of Diseases, Injuries, and Causes of Death published by the World Health Organization, or by other authoritative sources.

[21 FR 9829, Dec. 12, 1956, as amended at 52 FR 32543, Aug. 28, 1987; 56 FR 25001, May 31, 1991; 73 FR 58056, Oct. 6, 2008; 74 FR 56562, Nov. 2, 2009]

§ 34.3 Scope of examinations.

(a) *General*. In performing examinations, medical examiners shall consider those matters that relate to the following:

(1) A communicable disease of public health significance;

(2)(i) A physical or mental disorder and behavior associated with the disorder that may pose, or has posed, a threat to the property, safety, or welfare of the alien or others;

(ii) A history of a physical or mental disorder and behavior associated with the disorder, which behavior has posed a threat to the property, safety, or welfare of the alien or others and which behavior is likely to recur or lead to other harmful behavior;

(3) Drug abuse or addiction; and

(4) Any other physical abnormality, disease, or disability serious in degree or permanent in nature amounting to a substantial departure from normal well-being.

(b) *Scope of all medical examinations*. (1) All medical examinations will include the following:

(i) A general physical examination and medical history, evaluation for tuberculosis, and serologic testing for syphilis.

(ii) A physical examination and medical history for diseases specified in §§ 34.2(b)(1), and 34.2(b)(4) through 34.2(b)(10).

(2) The scope of the examination shall include any laboratory or additional studies that are deemed necessary, either as a result of the physical examination or pertinent information elicited from the alien's medical history, for the examining physician to reach a conclusion about the presence or absence of a physical or mental abnormality, disease, or disability.

(c) *Additional medical screening and testing for examinations performed outside the United States*. (1) HHS/CDC may require additional medical screening and testing for medical examinations performed outside the United States for diseases specified in §§ 34.2(b)(2) and 34.2(b)(3) by applying the risk-based medical and epidemiologic factors in paragraph (d)(2) of this section.

(2) Such examinations shall be conducted in a defined population in a geographic region or area outside the United States as determined by HHS/CDC.

(3) Additional medical screening and testing shall include a medical interview, physical examination, laboratory testing, radiologic exam, or other diagnostic procedure, as determined by HHS/CDC.

(4) Additional medical screening and testing will continue until HHS/CDC

determines such screening and testing is no longer warranted based on factors such as the following: Results of disease outbreak investigations and response efforts; effectiveness of containment and control measures; and the status of an applicable determination of public health emergency of international concern declared by the Director General of the WHO.

(5) HHS/CDC will directly provide medical examiners information pertaining to all applicable additional requirements for medical screening and testing, and will post these at the following Internet addresses: *http://www.cdc.gov/ncidod/dq/technica.htm* and *http://www.globalhealth.gov*.

(d) *Risk-based approach*. (1) HHS/CDC will use the medical and epidemiological factors listed in paragraph (d)(2) of this section to determine the following:

(i) Whether a disease as specified in § 34.2(b)(3)(ii) is a communicable disease of public health significance.

(ii) Which diseases in §§ 34.2(b)(2) and (b)(3) merit additional screening and testing, and the geographic area in which HHS/CDC will require this screening.

(2) Medical and epidemiological factors include the following:

(i) The seriousness of the disease's public health impact;

(ii) Whether the emergence of the disease was unusual or unexpected;

(iii) The risk of the spread of the disease in the United States;

(iv) The transmissibility and virulence of the disease;

(v) The impact of the disease at the geographic location of medical screening; and

(vi) Other specific pathogenic factors that would bear on a disease's ability to threaten the health security of the United States.

(e) *Persons subject to requirement for chest X-ray examination and serologic testing*. (1) As provided in paragraph (e)(2) of this section, a chest x-ray examination and serologic testing for syphilis shall be required as part of the examination of the following:

(i) Applicants for immigrant visas;

(ii) Students, exchange visitors, and other applicants for non-immigrant visas required by a U.S. consular authority to have a medical examination;

(iii) Applicants outside the United States who apply for refugee status;

(iv) Applicants in the United States who apply for adjustment of their status under the immigration statute and regulations.

(2) *Chest X-ray examination and serologic testing*. Except as provided in paragraph (e)(2)(iv) of this section, applicants described in paragraph (e)(1) of this section shall be required to have the following:

(i) For applicants 15 years of age and older, a chest x-ray examination;

(ii) For applicants under 15 years of age, a chest x-ray examination if the applicant has symptoms of tuberculosis, a history of tuberculosis, or evidence of possible exposure to a transmissible tuberculosis case in a household or other enclosed environment for a prolonged period;

(iii) For applicants 15 years of age and older, serologic testing for syphilis and HIV.

(iv) *Exceptions*. Serologic testing for syphilis shall not be required if the alien is under the age of 15, unless there is reason to suspect infection with syphilis. An alien, regardless of age, in the United States, who applies for adjustment of status to lawful permanent resident shall not be required to have a chest x-ray examination unless their tuberculin skin test, or an equivalent test for showing an immune response to *Mycobacterium tuberculosis* antigens, is positive. HHS/CDC may authorize exceptions to the requirement for a tuberculin skin test, an equivalent test for showing an immune response to *M. tuberculosis* antigens, or chest x-ray examination for good cause, upon application approved by the Director.

(3) *Immune response to Mycobacterium tuberculosis antigens*. (i) All aliens 2 years of age or older in the United States who apply for adjustment of status to permanent residents, under the immigration laws and regulations, or other aliens in the United States who are required by the U.S. Department of Homeland Security to have a medical examination in connection with a determination of their admissibility, shall be required to have a tuberculin skin test or an equivalent test for showing an immune response to

Mycobacterium tuberculosis antigens. Exceptions to this requirement may be authorized for good cause upon application approved by the Director. In the event of a positive tuberculin reaction, a chest X-ray examination shall be required. If the chest radiograph is consistent with tuberculosis, the alien shall be referred to the local health authority for evaluation. Evidence of this evaluation shall be provided to the civil surgeon before a medical notification may be issued.

(ii) Aliens less than 2 years old shall be required to have a tuberculin skin test, or an equivalent, appropriate test to show an immune response to *Mycobacterium tuberculosis* antigens, if there is evidence of contact with a person known to have tuberculosis or other reason to suspect tuberculosis. In the event of a positive tuberculin reaction, a chest X-ray examination shall be required. If the chest radiograph is consistent with tuberculosis, the alien shall be referred to the local health authority for evaluation. Evidence of this evaluation shall be provided to the civil surgeon before a medical notification may be issued.

(iii) Aliens outside the United States required to have a medical examination shall be required to have a tuberculin skin test, or an equivalent, appropriate test to show an immune response to *Mycobacterium tuberculosis* antigens, and, if indicated, a chest radiograph.

(iv) Aliens outside the United States required to have a medical examination shall be required to have a tuberculin skin test, or an equivalent, appropriate test to show an immune response to *Mycobacterium tuberculosis* antigens, and a chest radiograph, regardless of age, if they have symptoms of tuberculosis, a history of tuberculosis, or evidence of possible exposure to a transmissible tuberculosis case in a household or other enclosed environment for a prolonged period.

(4) *Additional testing requirements.* All applicants subject to the chest radiograph requirement, and for whom the radiograph shows an abnormality suggestive of tuberculosis disease, shall be required to undergo additional testing for tuberculosis.

(5) *How and where performed.* All chest x-ray images used in medical examinations performed under the regulations to this part shall be large enough to encompass the entire chest (approximately 14 x 17 inches; 35.6 x 32.2 cm).

(6) *Chest x-ray, laboratory, and treatment reports.* The chest radiograph reading and serologic test results for syphilis shall be included in the medical notification. When the medical examiner's conclusions are based on a study of more than one chest x-ray image, the medical notification shall include at least a summary statement of findings of the earlier images, followed by a complete reading of the last image, and dates and details of any laboratory tests and treatment for tuberculosis.

(f) *Procedure for transmitting records.* For aliens issued immigrant visas, the medical notification and chest X-ray images, if any, shall be placed in a separate envelope which shall be sealed. When more than one chest X-ray image is used as a basis for the examiner's conclusions, all images shall be included.

(g) *Failure to present records.* When a determination of admissibility is to be made at the U.S. port of entry, a medical hold document shall be issued pending completion of any necessary examination procedures. A medical hold document may be issued for aliens who:

(1) Are not in possession of a valid medical notification, if required;

(2) Have a medical notification which is incomplete;

(3) Have a medical notification which is not written in English;

(4) Are suspected to have an excludable medical condition.

(h) The Secretary of Homeland Security, after consultation with the Secretary of State and the Secretary of Health and Human Services, may in emergency circumstances permit the medical examination of refugees to be completed in the United States.

(i) All medical examinations shall be carried out in accordance with such technical instructions for physicians conducting the medical examination of

aliens as may be issued by the Director. Copies of such technical instructions are available upon request to the Director, Division of Global Migration and Quarantine, Mailstop E03, HHS/CDC, Atlanta GA 30333.

[73 FR 58056, Oct. 6, 2008, as amended at 73 FR 62211, Oct. 20, 2008; 74 FR 56562, Nov. 2, 2009]

§ 34.4 Medical notifications.

(a) Medical examiners shall issue medical notifications of their findings of the presence or absence of Class A or Class B medical conditions. The presence of such condition must have been clearly established.

(b) *Class A medical notifications.* (1) The medical examiner shall report his/her findings to the consular officer or the INS by Class A medical notification which lists the specific condition for which the alien may be excluded, if an alien is found to have:

(i) A communicable disease of public health significance;

(ii)(A) A physical or mental disorder, and behavior associated with the disorder that may pose, or has posed, a threat to the property, safety, or welfare of the alien or others; or

(B) A history of a physical or mental disorder and behavior associated with the disorder, which behavior has posed a threat to the property, safety, or welfare of the alien or others and which behavior is likely to recur or lead to other harmful behavior;

(iii) Drug abuse or addition.

Provided, however, That a Class A medical notification of a physical or mental disorder, and behavior associated with that disorder that may pose, or has posed, a threat to the property, safety, or welfare of the alien or others, shall in no case be issued with respect to an alien having only mental shortcomings due to ignorance, or suffering only from a condition attributable to remediable physical causes or of a temporary nature, caused by a toxin, medically prescribed drug, or disease.

(2) The medical notification shall state the nature and extent of the abnormality; the degree to which the alien is incapable of normal physical activity; and the extent to which the condition is remediable. The medical examiner shall indicate the likelihood, that because of the condition, the applicant will require extensive medical care or institutionalization.

(c) *Class B medical notifications.* (1) If an alien is found to have a physical or mental abnormality, disease, or disability serious in degree or permanent in nature amounting to a substantial departure from normal well-being, the medical examiner shall report his/her findings to the consular or INS officer by Class B medical notification which lists the specific conditions found by the medical examiner. Provided, however, that a Class B medical notification shall in no case be issued with respect to an alien having only mental shortcomings due to ignorance, or suffering only from a condition attributable to remediable physical causes or of a temporary nature, caused by a toxin, medically prescribed drug, or disease.

(2) The medical notification shall state the nature and extent of the abnormality, the degree to which the alien is incapable of normal physical activity, and the extent to which the condition is remediable. The medical examiner shall indicate the likelihood, that because of the condition, the applicant will require extensive medical care or institutionalization.

(d) *Other medical notifications.* If as a result of the medical examination, the medical examiner does not find a Class A or Class B condition in an alien, the medical examiner shall so indicate on the medical notification form and shall report his findings to the consular or INS officer.

[56 FR 25003, May 31, 1991]

§ 34.5 Postponement of medical examination.

Whenever, upon an examination, the medical examiner is unable to determine the physical or mental condition of an alien, completion of the medical examination shall be postponed for such observation and further examination of the alien as may be reasonably necessary to determine his/her physical or mental condition. The examination shall be postponed for aliens who have an acute infectious disease until the condition is resolved. The alien shall

be referred for medical care as necessary.

[56 FR 25003, May 31, 1991]

§ 34.6 Applicability of Foreign Quarantine Regulations.

Aliens arriving at a port of the United States shall be subject to the applicable provisions of 42 CFR part 71, Foreign Quarantine, with respect to examination and quarantine measures.

[56 FR 25003, May 31, 1991]

§ 34.7 Medical and other care; death.

(a) An alien detained by or in the custody of the INS may be provided medical, surgical, psychiatric, or dental care by the Public Health Service through interagency agreements under which the INS shall reimburse the Public Health Service. Aliens found to be in need of emergency care in the course of medical examination shall be treated to the extent deemed practical by the attending physician and if considered to be in need of further care, may be referred to the INS along with the physician's recommendations concerning such further care.

(b) In case of the death of an alien, the body shall be delivered to the consular or immigration authority concerned. If such death occurs in the United States, or in a territory or possession thereof, public burial shall be provided upon request of the INS and subject to its agreement to pay the burial expenses. Autopsies shall not be performed unless approved by the INS.

[56 FR 25003, May 31, 1991]

§ 34.8 Reexamination; convening of review boards; expert witnesses; reports.

(a) The Director shall convene a board of medical officers to reexamine an alien:

(1) Upon the request of the INS for a reexamination by such a board; or

(2) Upon an appeal to the INS by an alien who, having received a medical examination in connection with the determination of admissiblity to the United States (including examination on arrival and adjustment of status as provided in the immigration laws and regulations) has been certified for a Class A condition.

(b) For boards convened to reexamine aliens certified as:

(1) Having a communicable disease of public health significance, the board shall consist of three medical officers, at least one of whom is experienced in the diagnosis and treatment of the communicable disease for which medical notification has been made, and the decision of the majority of the board shall prevail;

(2)(i) Having a physical or mental disorder and behavior associated with the disorder that may pose, or has posed, a threat to the property, safety, or welfare of the alien or others; or

(ii) Having a history of a physical or mental disorder and behavior associated with the disorder, which behavior has posed a threat to the property, safety, or welfare of the alien or others and which behavior is likely to recur or lead to other harmful behavior; or

(iii) Being a drug abuser or addict;

(3) In circumstances covered by paragraph (b)(2) of this section, the board shall consist of three medical officers, at least one of whom shall be a board certified psychiatrist, and the decision of the majority of the board shall prevail.

(c) Reexamination shall include:

(1) Review of all records submitted by the alien, other witnesses, or the board;

(2) Use of any laboratory or additional studies which are deemed clinically necessary as a result of the physical examination or pertinent information elicited from the alien's medical history;

(3) Consideration of statements regarding the alien's physical or mental condition made by a physician after his/her examination of the alien; and

(4) An independent physical or psychiatric examination of the alien performed by the board, at the board's option.

(d) An alien who is to be reexamined shall be notified of the time and place of his/her reexamination not less than 5 days prior thereto.

(e) The alien, at his/her own cost and expense, may introduce as witnesses before the board such physicians or medical experts as the board may in its discretion permit; provided that the alien shall be permitted to introduce at

least one expert medical witness. If any witnesses offered are not permitted by the board to testify, the record of the proceedings shall show the reason for the denial of permission.

(f) Witnesses before the board shall be given a reasonable opportunity to examine the medical notification and other records involved in the reexamination and to present all relevant and material evidence orally or in writing until such time as the proceedings are declared by the board to be closed. During the course of the hearing the alien's attorney or representative shall be permitted to examine the alien and he/she, or the alien, shall be permitted to examine any witnesses offered in the alien's behalf and to cross-examine any witnesses called by the board. If the alien does not have an attorney or representative, the board shall assist the alien in the presentation of his/her case to the end that all of the material and relevant facts may be considered.

(g) The findings and conclusions of the board shall be based on its medical examination of the alien, if any, and on the evidence presented and made a part of the record of its proceedings.

(h) The board shall report its findings and conclusions to the INS, and shall also give prompt notice thereof to the alien if his/her reexamination has been based on his/her appeal. The board's report to the INS shall specifically affirm, modify, or reject the findings and conclusions of prior examining medical officers.

(i) The board shall issue its medical notification in accordance with the applicable provisions of this part if it finds that an alien it has reexamined has a Class A or Class B condition.

(j) If the board finds that an alien it has reexamined does not have a Class A or Class B condition, it shall issue its medical notification in accordance with the applicable provisions of this part.

(k) After submission of its report, the board shall not be reconvened, nor shall a new board be convened, in connection with the same application for admission or for adjustment of status, except upon the express authorization of the Director.

[56 FR 25004, May 31, 1991]

PART 35—HOSPITAL AND STATION MANAGEMENT

Subpart A—General

Sec.
35.1 Hospital and station rules.
35.2 Compliance with hospital rules.
35.3 Noncompliance; deprivation of privileges.
35.4 Noncompliance; discharge or transfer.
35.5 Entitlement to care after discharge or transfer by reason of noncompliance.
35.6 Admissions; determination of eligibility for care.
35.7 Admissions; designation of person to be notified.
35.8 Safekeeping of money and effects; withdrawals.
35.9 Disposition of money and effects left by other than deceased patients.
35.10 Destruction of effects dangerous to health.
35.11 Clinical records; confidential.
35.12 Solicitation of legal business prohibited.
35.13 Entry for negotiation of release or settlement.
35.14 Solicitation of legal business; negotiation of release or settlement; assistance prohibited.
35.15 Consent to operative procedures.
35.16 Autopsies and other post-mortem operations.
35.17 Fees and charges for copying, certification, search of records and related services.

Subpart B—Transfer of Patients

35.21 Authorization of transfer.
35.22 Attendants.

Subpart C—Disposition of Articles Produced by Patients

35.31 Retention by patients.
35.32 Board of appraisers.
35.33 Sale; prices; deposit of proceeds.
35.34 Resale.
35.35 Unsalable articles.

Subpart D—Disposal of Money and Effects of Deceased Patients

35.41 Inventory.
35.42 Notice upon death.
35.43 Delivery only upon filing claim; forms; procedure.
35.44 Delivery to legal representative; to other claimants if value is $1,000 or less.
35.45 Disposition of effects; exceptions.
35.46 Conflicting claims.
35.47 Disposition of Government checks.
35.48 Deposit of unclaimed money; sale of unclaimed effects and deposit of proceeds.

35.49 Sale of unclaimed effects; procedures.
35.50 Disposition of unsold effects.
35.51 Manner of delivery; costs, receipts.
35.52 Delivery of possession only; title unaffected.

Subpart E—Contributions for the Benefit of Patients

35.61 Applicability.
35.62 Acceptance of contributions.
35.63 Report of and accounting for contributions.
35.64 Donors.
35.65 Acceptable personal property.
35.66 Expenditure of cash contributions.

AUTHORITY: Sec. 215, 58 Stat. 690, as amended; 42 U.S.C. 216, sec. 321, 53 Stat. 695, as amended; 42 U.S.C. 248, unless otherwise noted.

SOURCE: 21 FR 9830, Dec. 12, 1956, unless otherwise noted.

Subpart A—General

§ 35.1 Hospital and station rules.

The officer in charge of a station or hospital of the Service is authorized to adopt such rules and issue such instructions, not inconsistent with the regulations in this part and other provisions of law, as he deems necessary for the efficient operation of the station or hospital and for the proper and humane care and treatment of all patients therein. All general rules governing the conduct and privileges of patients, and of members of the public while on the premises, shall be posted in prominent places.

§ 35.2 Compliance with hospital rules.

All patients and visitors in stations and hospitals of the Service are expected to comply with the rules and instructions issued under the authority of the officer in charge.

§ 35.3 Noncompliance; deprivation of privileges.

Any patient who wilfully fails or refuses to comply with rules or instructions of a hospital or station or with regulations of the Service, may, by the direction of the officer in charge, be deprived of recreational or other privileges accorded patients. Any visitor who wilfully fails or refuses to comply with any such rules, instructions, or regulations may, by direction of the officer in charge, be denied visiting privileges.

§ 35.4 Noncompliance; discharge or transfer.

(a) If the officer in charge finds, upon investigation, that a patient other than a leprosy patient, by willful and persistent failure or refusal to comply with such rules, instructions, or regulations is seriously impeding the course of his own care and treatment, or that of other patients, he may (1) discharge the patient, or (2) if the patient is not a voluntary patient, arrange for his transfer to the custody of the authority responsible for his admission to the station or hospital. No patient shall be discharged or transferred on account of noncompliance if to do so would seriously endanger his life or health, nor shall any patient be discharged if his failure to comply is due, in the opinion of the officer in charge, to a mental disease or disorder.

(b) If the discharge or transfer of a patient is likely to endanger the health of persons other than the patient or officers or employees of the station or hospital, the officer in charge shall give advance notice to appropriate State, county, or municipal authorities of the discharge or transfer.

§ 35.5 Entitlement to care after discharge or transfer by reason of noncompliance.

No person otherwise entitled to care, treatment, or hospitalization at Service facilities, or in other facilities at the expense of the Service, shall be denied such care or treatment by reason of his prior discharge or transfer from any such facility under the provisions of § 35.4.

§ 35.6 Admissions; determination of eligibility for care.

Except as may otherwise be provided for specific classes of patients by the regulations of this chapter, the officer in charge of the station or hospital to which application is made is authorized to determine the eligibility of applicants, as beneficiaries of the Service, for care and for treatment. Such determinations shall be subject to review by the chief of the division of the Service responsible for administration of the

station or hospital concerned upon referral made by the officer in charge in doubtful cases or upon appeal made by an applicant who has been denied care or treatment.

§ 35.7 Admissions; designation of person to be notified.

Every in-patient, at the time of admission to the hospital or station or as soon thereafter as practicable, shall be requested to designate a person or persons to be notified in case of emergency.

§ 35.8 Safekeeping of money and effects; withdrawals.

(a) A place for the safekeeping of money and effects of patients shall be provided at each station or hospital, and an itemized receipt therefor shall be furnished to the patient and to any other person who places money or effects therein for the benefit of the patient.

(b) Money and effects may be withdrawn only by or on behalf of the patient, by his legally appointed representative authorized to receive or dispose of his property (including the money and effects in the custody of the station or hospital), or by a person who is authorized, under the law of the State in which the station or hospital is located, to receive or dispose of the patient's money and effects. In any case in which the officer in charge has had actual notice of the appointment of a legal representative, withdrawals may be made only by such representative or in accordance with his written directions. No delivery shall be made under this paragraph unless (1) the person receiving the money or effects shall sign an itemized receipt therefor, or (2) the delivery is witnessed by two persons. The provisions of this paragraph do not prohibit withdrawals made necessary by the provisions of this part for the disposition of money and effects left by patients on death or on departure from the station or hospital, or by the provisions of § 35.10.

§ 35.9 Disposition of money and effects left by other than deceased patients.

Money and effects left on the premises by a patient shall be forwarded promptly to him. If because his whereabouts are unknown his money and effects cannot be delivered to him within 120 days after his departure, his money shall be deposited into the Treasury and credited to the account entitled ''Money and Effects of Former Patients (PHS (T) name of patient),'' and his effects shall be held for him for six months and then sold in accordance with § 35.49, and the proceeds deposited into the Treasury and credited to the above account.

§ 35.10 Destruction of effects dangerous to health.

The officer in charge shall cause to be destroyed effects brought into or received in the station or hospital area by patients which, in the judgement of such officer, are dangerous as a source of disease to the health or life of patients or personnel of the station or hospital or visitors therein and cannot otherwise be safely disposed of or rendered harmless by disinfection or other means. The destruction of effects shall be witnessed by at least one officer or employee designated for that purpose by the officer in charge, and appropriate records of the destruction shall be maintained.

§ 35.11 Clinical records; confidential.

A complete clinical record shall be maintained for each patient admitted to a station or hospital of the Service. Such records shall be confidential and shall not be disclosed except as may be provided elsewhere in regulations of the Service.

§ 35.12 Solicitation of legal business prohibited.

The solicitation, directly or indirectly, of legal business or of a retainer or agreement authorizing an attorney to render legal services, is prohibited in all stations and hospitals of the Service.

§ 35.13 Entry for negotiation of release or settlement.

(a) No person shall be permitted to enter a station or hospital of the Service for the purpose of negotiating a settlement or obtaining a general or special release or statement from any patient with reference to any illness or

personal injury for which the patient is receiving care or treatment, or for the purpose of conferring with him as an attorney or representative of an attorney with reference to such illness or injury, unless the patient has signified his willingness to have such person enter for such purpose and, in the judgment of the officer in charge, the physical or mental condition of the patient will not thereby be impaired.

(b) Any person entering a station or hospital for a purpose enumerated in paragraph (a) of this section shall register in the manner prescribed by the officer in charge, and shall furnish for the records of the station or hospital the name of each patient by whom he has been received for such a purpose.

§ 35.14 Solicitation of legal business; negotiation of release or settlement; assistance prohibited.

All employees of the Service and all persons attached in any capacity to a station or hospital, including patients, are forbidden to communicate, directly or indirectly, with any person for the purpose of aiding in the solicitation of legal business or in the negotiation of a settlement or the obtaining of a general or special release or statement from any patient with reference to any illness or personal injury for which the patient is receiving care or treatment therein. No patient is prohibited by this section from communicating on his own behalf with an attorney of his choice or with other persons.

§ 35.15 Consent to operative procedures.

Except in emergencies when the patient is physically or mentally incapable of consenting and the delay required to obtain the consent of his natural or legal guardian would seriously endanger the patient's health, no operative procedure shall be undertaken unless the patient or, in the case of a minor or incompetent, his natural or legal guardian gives his consent, nor shall any major operative procedure or the administration of a general anaesthetic be undertaken unless such consent has been obtained in writing. The consent or refusal of consent shall be made a part of the clinical record.

§ 35.16 Autopsies and other post-mortem operations.

Autopsies, or other post-mortem operations, including removal of tissue for transplanting, may be performed on the body of a deceased patient only by direction of the officer in charge and only if consented to in writing by a person authorized under the law of the State in which the station or hospital is located to permit an autopsy or such other post-mortem operation under the circumstances of the particular death involved. Restrictions or limitations imposed by the person consenting thereto on the extent of the autopsy or other post-mortem operation shall be observed. Documents embodying consent shall be made a part of the clinical record.

[25 FR 6331, July 6, 1960]

§ 35.17 Fees and charges for copying, certification, search of records and related services.

A prescribed fee, in accordance with the schedule in paragraph (c) of this section, shall be collected for each of the listed services.

(a) *Application for services.* Any person requesting (1) a copy of a clinical record, clinical abstract, or other document containing clinical information; or (2) a certification of a clinical record or document; or (3) a search of clinical records, shall make written application therefor to the Public Health Service facility having custody of the subject matter involved. Such application shall state specifically the particular record or document requested, and the purpose for which such copy or document is desired to be used. The application shall be accompanied by a deposit in an amount equal to the prescribed charge for the service rendered. Where it is not known if a clinical record or other document is in existence, the application shall be accompanied by a minimum deposit of $2.50.

(b) *Authorization for disclosure.* The furnishing of copies of PHS records containing confidential clinical information must comply with the requirements of part I, title 42, Code of Federal Regulations, governing authorization for the disclosure of such information.

(c) *Schedule of fees.*

(1) Photocopy reproduction of a clinical record or other document (through use of facility equipment):	
(a) Processing (searching, preparation of record and use of equipment), first page	$3.25
(b) Each additional page	.25
(2) Certification, per document	.25
(3) Unsuccessful searching, per hour (minimum charge 1 hour)	2.50
(4) Clinical abstracts, per request	3.00
(5) Arranging commercial duplication of a clinical record, per request	[1] 0.50
(6) If the requested material is to be transmitted by registered mail, airmail, or special delivery mail, the postal fees therefor shall be added to the other fees provided above, unless the applicant has included proper postage or stamped return envelopes for this purpose.	

[1] The private concern which duplicates records for an applicant will make a separate charge therefor and will bill the applicant directly.

(d) *Waiver of fee*. The prescribed fee may be waived, in the discretion of the medical officer in charge, under the following circumstances:

(1) When the service or document is requested by another agency of the Federal Government for use in carrying out official Government business.

(2) When a clinical record is requested for the purpose of providing continued medical care to a Service beneficiary by a non-Service physician, clinic, or hospital, in which case the record will be forwarded only to the physician, clinic, or hospital concerned.

(3) When the service or document is requested by an attorney in the prosecution of a Service beneficiary's personal injury claim against a third person, involving the concurrent assertion of a government medical care claim under 42 U.S.C. 2651–2653. In such case, the service or document requested will be furnished only upon compliance with all additional requirements for the release of records in third party recovery cases, including the proper execution of form PHS–4686, Agreement to Assign Claim Upon Request.

(4) When the service or document is requested by, and furnished to, a Member of Congress for official use.

(5) When the service or document is requested by, and furnished to, a court in lieu of the personal court appearance of an employee of the Public Health Service.

(6) When the service or document is required to be furnished free in accordance with a Federal statute or an Executive order.

(7) When the furnishing of the service or document requested without charge would be an appropriate courtesy to a foreign country or international organization.

(Sec. 501, 65 Stat. 290; 31 U.S.C. 483(a); sec. 215, 58 Stat. 690, as amended; 42 U.S.C. 216)

[32 FR 6842, May 4, 1967]

Subpart B—Transfer of Patients

§ 35.21 Authorization of transfer.

Except as otherwise provided by law or regulation with respect to certain classes of patients, the officer in charge of a station or hospital of the Service may provide, without any cost to the patient, for the transfer of the patient either from such station or hospital to another station or hospital of the Service or to any non-Service station or hospital at which the patient may be received, or from any non-Service hospital at which he is receiving care or treatment as a patient of the Service to a station or hospital of the Service.

§ 35.22 Attendants.

Patients shall be transferred by such means and accompanied by such medical, nursing, or other attendants as may be necessary to protect the health and safety of the patient and other persons likely to come into contact with him, including in the case of a prisoner such guards as may be necessary to assure his safekeeping. A female patient requiring the services of attendants shall be accompanied by at least one female attendant. Medical or nursing attendants shall be qualified to care for persons suffering from the type of disease or disorder with which the patient is afflicted and shall be provided with equipment and medicines necessary for the care of the patient.

Subpart C—Disposition of Articles Produced by Patients

§ 35.31 Retention by patients.

Subject to the rules of the station or hospital, patients may be accorded the privilege of retaining articles produced by them in the course of their curative treatment with the aid of materials furnished by the Service. Articles not

retained by patients shall be disposed of as provided in this subpart. The provisions of this subpart do not apply to the products of industrial activities established for narcotic addicts.

§ 35.32 Board of appraisers.

The officer in charge shall appoint, from the personnel of the station or hospital, a board of three persons to serve at his pleasure. The board shall provide for the sale of articles having commercial value and shall keep appropriate records of such articles and their disposition.

§ 35.33 Sale; prices; deposit of proceeds.

The board shall determine and redetermine from time to time the prices at which articles are to be sold, and in doing so shall consider the cost of materials used, reasonable handling charges, and the fair market value of the articles. The sale price shall be indicated on each article by tag or other appropriate means, and a list of articles offered for sale and their respective sale prices shall be posted from time to time in the hospital or station area. In its discretion, the board may offer such articles for purchase by other patients or by charitable organizations before offering them for purchase to the general public. No article shall be sold or resold to any officer or employee of the Service. Moneys received from the sale of articles shall be deposited into the Treasury to the credit of the appropriation from which the materials for making such articles were purchased.

§ 35.34 Resale.

No article purchased under the provisions of this subpart shall be resold in the hospital or station area at a price to exceed the sale price fixed by the board for such article.

§ 35.35 Unsalable articles.

Articles having no commercial value shall be stored, destroyed, or otherwise disposed of as the officer in charge may direct.

Subpart D—Disposal of Money and Effects of Deceased Patients

§ 35.41 Inventory.

Promptly after the death of a patient in a station or hospital of the Service, an inventory of his money and effects left therein shall be made by two or more officers or employees of the Service designated for such purpose by the officer in charge.

§ 35.42 Notice upon death.

The officer in charge shall notify in writing all persons known to him to whom delivery of the patient's money and effects might be made hereunder, and, in the case of an alien patient, a consul of the country of his apparent nationality. Each person so notified shall be requested to furnish information concerning (a) the existence or whereabouts of any persons to whom delivery of the deceased patient's money and effects may be made pursuant to these provisions, and (b) the permanent residence or home of the deceased.

§ 35.43 Delivery only upon filing claim; forms; procedure.

(a) Delivery of the money and effects of a deceased patient shall be made only to a person who has filed a claim therefor on a form prescribed by the Surgeon General.

(b) A claimant shall furnish, in addition to the information on the prescribed form, such additional information as the officer in charge may consider necessary to establish the identity of the claimant and the truth of his statements.

(c) A person filing a claim as a legal representative shall be required to present letters of administration or a certificate of a court attesting his qualification or appointment.

(d) If a claim is made after the money, or proceeds from the sale of the effects, of a deceased patient have been deposited in the Treasury, the claim shall be referred to the General Accounting Office. If the claim is for checks or evidences of indebtedness of the United States which have been trasnsmitted to the issuing agency pursuant to §§ 35.47 and 35.48, the claimant shall be referred to such agency.

§ 35.44 Delivery to legal representative; to other claimants if value is $1,000 or less.

The money and effects of the deceased patient shall in all cases be delivered to the legal representative, if any, of his estate. If the value is $1,000 or less, and the officer in charge has neither notice nor other knowledge of the appointment or qualification of a legal representative, nor reason to believe that a legal representative will be appointed or qualified, he shall deliver all the money and effects, as soon as practicable after the expiration of 10 days from the sending of notices to one of the following in the indicated order of priority:

(a) A person, if any, designated in writing by the patient to receive the same.

(b) The patient's surviving spouse.

(c) The patient's child or children in equal parts.

(d) The patient's parent or parents in equal parts.

(e) Any other person who would be entitled to receive the money and effects under the law of the patient's domicile: *Provided*, That delivery of such money and effects may be made immediately upon application by one of the persons specified above if the officer in charge has neither notice nor other knowledge that a person higher in the indicated order of priority exists.

§ 35.45 Disposition of effects; exceptions.

Irrespective of the provisions of this subpart, the officer in charge may (a) release from among the effects of the deceased patient so much of the patient's clothing as may be necessary for use in preparation of his body for burial and (b) cause to be destroyed, or otherwise disposed of, such used toilet articles of the patient as appear to have no commercial or other value.

§ 35.46 Conflicting claims.

In any case in which conflicting claims are filed or the officer in charge considers it to be in the interest of persons who may be ultimately entitled thereto, delivery may be withheld from all persons other than a duly qualified legal representative.

§ 35.47 Disposition of Government checks.

Notwithstanding any other provisions of this subpart, immediately upon completion of the inventory, checks drawn on the Treasurer of the United States shall be sent by safe means to the department, agency, or establishment of the Government of the United States issuing such checks. The transmittal shall be accompanied by a statement of the reasons therefor and of all available information which may aid the issuing unit in the disposition of the check transmitted. Notice of the disposition of any checks, with identifying information, shall be given to the person or persons, if any, to which money and effects are delivered in accordance with § 35.44.

§ 35.48 Deposit of unclaimed money; sale of unclaimed effects and deposit of proceeds.

If, within 120 days after sending of notices no claim has been filed pursuant to the provisions of § 35.43, the patient's money, consisting of all types of United States currency and coin, shall be deposited in the Treasury to the credit of the trust-fund account entitled ''Money and Effects of Deceased Patients, Public Health Service.'' If, within six months after the death of a patient, no claim has been filed pursuant to the provisions of § 35.43, his effects (including foreign currency and coin but excluding Postal Savings Certificates and other evidences of indebtedness of the United States) shall be sold at public auction or by sealed bids to the highest bidder and the proceeds deposited to the credit of the trust-fund account entitled ''Money and Effects of Deceased Patients, Public Health Service.'' Postal Savings Certificates and other evidences of indebtedness of the United States shall be transmitted to the issuing department or agency with a statement of the occasion therefor.

§ 35.49 Sale of unclaimed effects; procedures.

The following provisions shall govern the sale of effects:

(a) *Notice.* Reasonable advance notice of proposed sales shall be posted at such prominent places in the station or

hospital area as the officer in charge may designate. In addition, a notice shall be posted at the nearest post office, and notices shall be sent by mail to all known persons to whom delivery of money and effects of the patient may be made under the provisions of this subpart. The officer or employee who posts or sends notices of sales shall make an appropriate affidavit on a copy of the notice as to his action in that respect, including in his affidavit the names of persons to whom copies of the notices were mailed and the mailing dates. The copy of the notice on which the affidavit appears shall be retained in the files of the station or hospital.

(b) *Form and contents of notice.* Notice of proposed sales shall be given on a form prescribed by the Surgeon General. The notice shall include: an inventory of the effects to be offered for sale; the names of the patients from whom the effects were received; the precise date, time, and place when and where the sale will be held; a statement that the articles will be available for inspection immediately prior to sale, if sold at public auction, or on a day and during the hours appointed for the inspection of articles if sold by sealed bid; a statement that the sale is to be held pursuant to the provisions of the regulations in this part, that, if the articles are to be sold by sealed bid, the right to reject all bids is reserved, and that, if otherwise authorized, delivery will be made of effects or proceeds of sales to persons filing claims prior to the sale of effects or prior to the transmittal of proceeds to the Surgeon General.

(c) *Time and place of sales.* All sales shall be held at reasonable hours and at such places within the station or hospital area as the officer in charge may designate.

(d) *Who shall conduct sales.* All sales shall be conducted by the officer in charge or by a responsible officer or employee designated by him.

(e) *Sale and delivery.* All effects offered for sale shall be sold to the highest bidder and delivered to him immediately upon payment of the sale price in cash or by postal money order or certified check and execution of an appropriate receipt by the person to whom delivery is made.

§ 35.50 Disposition of unsold effects.

The officer in charge shall dispose of effects offered for sale but remaining unsold in such manner as he considers to be proper, but, if practicable, such effects shall be used for the benefit of other patients of the Service.

§ 35.51 Manner of delivery; costs, receipts.

(a) If a person entitled under this subpart to receive the money and effects of a patient is unable to take possession thereof at the station or hospital, they shall be sent to him at the expense of the United States in the most economical manner available. The records of the station or hospital shall show the names and addresses of persons to whom money or effects have been sent, the date of sending, the means used, an itemized list of the money or effects sent, and a statement by a witnessing officer or employee verifying the foregoing from his own observation.

(b) If not delivered personally by an authorized officer or employee of the Service, money, evidences of indebtedness, and other valuable papers and documents shall be sent by registered mail (or other safe means).

(c) Persons receiving the money and effects of a patient shall be required to execute an itemized receipt therefor.

§ 35.52 Delivery of possession only; title unaffected.

Except for delivery of effects to purchasers at sales held in accordance with § 35.49, delivery or deposit under this subpart of the money or effects, or the proceeds of a sale of the effects, of a deceased patient constitutes only a transfer of possession and is not intended to affect in any manner the title to such money, effects, or proceeds.

Subpart E—Contributions for the Benefit of Patients

AUTHORITY: Sec. 215, 58 Stat. 690, as amended, 63 Stat. 835 (42 U.S.C. 216); sec. 321, 58 Stat. 695, as amended, 62 Stat. 1017 (42 U.S.C. 248).

SOURCE: 42 FR 60742, Nov. 29, 1977, unless otherwise noted.

§ 35.61 Applicability.

This subpart sets forth the policies and procedures governing the acceptance and administration of contributions of money or property intended solely for the benefit of all patients in a ward or unit or a particular hospital or station of the Public Health Service, excluding outpatient clinics. Such contributions are distinguishable from (a) monies or other valuables belonging to specific patients which are accepted and held in custody for the convenience of the patient until such time as he or she wishes to withdraw them, and (b) gifts to the United States to support Public Health Service functions under section 501 of the Public Health Service Act or other statutory provisions, which may be accepted and administered only in accordance with such statutory provisions or other applicable laws.

§ 35.62 Acceptance of contributions.

(a) The officer in charge of a hospital or station or his delegate may accept contributions of money or personal property which are donated for the general benefit of all patients within the hospital or station (or a ward or unit thereof) without further specification or conditions as to use. Contributions tendered subject to conditions by the donor, such as expenditure or use only on behalf of certain patients or for specific purposes, may not be accepted.

(b) Contribution of money or property shall be accepted in writing.

§ 35.63 Report of and accounting for contributions.

(a) Contributions of money accepted pursuant to § 35.62 (hereinafter referred to as ''patient fund'') will be treated consistently with Federal deposit rules and as supplemented with appropriate procedures of the facility. This regulation is not intended to exclude contributions for the benefit of patients from proper accountability and control of funds and property.

(b) Contributions of property accepted pursuant to § 35.62 shall be recorded and accounted for in the same manner as other property of a similar kind maintained in the hospital or station, but with suitable identification so that it can be distinguished from government-owned property.

§ 35.64 Donors.

Authorized contributions may be accepted from patients, employees and other individuals, and agencies and organizations.

§ 35.65 Acceptable personal property.

Contributions of personal property which may be accepted pursuant to § 35.62 include, but are not limited to, recreational equipment, furniture, radios and television sets. After its useful life, any cash proceeds realized upon disposition of such property shall be deposited to the credit of the patient fund and shall be available for expenditure pursuant to § 35.66(c).

§ 35.66 Expenditure of cash contributions.

(a) Officials authorized to accept contributions shall not maintain control over the actual obligation or expenditure of such monies.

(b) Only those officers or employees specifically designated in writing by the officer in charge for such purpose may obligate and expend monies from the patient fund. The names of officials so designated shall be provided to the relevant fiscal control office.

(c) Subject to availability of sufficient funds, monies in the patient fund may be expended for materials, services or activities which contribute to the well-being or morale of patients, including but not limited to provision of reading and entertainment materials, recreation activities, and, in appropriate cases, necessary financial support (including travel expenses, meals, and lodging) of relatives, guardians, or friends of patients to enable such persons to be available for the patient's comfort and support.

(d) Officers in charge may issue such additional instructions, not inconsistent with this subpart, as may be necessary to implement its provisions.

PART 37—SPECIFICATIONS FOR MEDICAL EXAMINATIONS OF UNDERGROUND COAL MINERS

Subpart—Chest Roentgenographic Examinations

Sec.
37.1 Scope.
37.2 Definitions.
37.3 Chest roentgenograms required for miners.
37.4 Plans for chest roentgenographic examinations.
37.5 Approval of plans.
37.6 Chest roentgenographic examinations conducted by the Secretary.
37.7 Transfer of affected miner to less dusty area.
37.8 Roentgenographic examination at miner's expense.
37.20 Miner identification document.

SPECIFICATIONS FOR PERFORMING CHEST ROENTGENOGRAPHIC EXAMINATIONS

37.40 General provisions.
37.41 Chest roentgenogram specifications.
37.42 Approval of roentgenographic facilities.
37.43 Protection against radiation emitted by roentgenographic equipment.

SPECIFICATIONS FOR INTERPRETATION, CLASSIFICATION, AND SUBMISSION OF CHEST ROENTGENOGRAMS

37.50 Interpreting and classifying chest roentgenograms.
37.51 Proficiency in the use of systems for classifying the pneumoconioses.
37.52 Method of obtaining definitive interpretations.
37.53 Notification of abnormal roentgenographic findings.
37.60 Submitting required chest roentgenograms and miner identification documents.

REVIEW AND AVAILABILITY OF RECORDS

37.70 Review of interpretations.
37.80 Availablity of records.

Subpart—Autopsies

37.200 Scope.
37.201 Definitions.
37.202 Payment for autopsy.
37.203 Autopsy specifications.
37.204 Procedure for obtaining payment.

AUTHORITY: Sec. 203, 83 Stat. 763; 30 U.S.C. 843, unless otherwise noted.

SOURCE: 43 FR 33715, Aug. 1, 1978, unless otherwise noted.

Subpart—Chest Roentgenographic Examinations

§37.1 Scope.

The provisions of this subpart set forth the specifications for giving, interpreting, classifying, and submitting chest roentgenograms required by section 203 of the act to be given to underground coal miners and new miners.

§37.2 Definitions.

Any term defined in the Federal Mine Safety and Health Act of 1977 and not defined below shall have the meaning given it in the act. As used in this subpart:

(a) *Act* means the Federal Mine Safety and Health Act of 1977 (30 U.S.C. 801, *et seq.*).

(b) *ALOSH* means the Appalachian Laboratory for Occupational Safety and Health, Box 4258, Morgantown, WV 26505. Although the Division of Respiratory Disease Studies, National Institute for Occupational Safety and Health, has programmatic responsibility for the chest roentgenographic examination program, the Institute's facility in Morgantown—ALOSH—is used throughout this subpart in referring to the administration of the program.

(c) *Chest roentgenogram* means a single posteroanterior roentgenographic projection or radiograph of the chest at full inspiration recorded on roentgenographic film.

(d) *Convenient time and place* with respect to the conduct of any examination under this subpart means that the examination must be given at a reasonable hour in the locality in which the miner resides or a location that is equally accessible to the miner. For example, examinations at the mine during, immediately preceding, or immediately following work and a ''no appointment'' examination at a medical facility in a community easily accessible to the residences of a majority of the miners working at the mine, shall be considered of equivalent convenience for purposes of this paragraph.

(e) *Institute* and *NIOSH* mean the National Institute for Occupational Safety and Health Center for Disease Control, Public Health Service, Department of Health and Human Services.

(f) *ILO-U/C Classification* means the classification of radiographs of the pneumoconioses devised in 1971 by an international committee of the International Labor Office and described in ''Medical Radiography and Photography,'' volume 48, No. 3, December 1972. ''ILO Classification'' means the classification of radiographs of the pneumoconioses revised in 1980 by an international committee of the International Labor Office and described in ''Medical Radiography and Photography'' volume 57, No. 1, 1981, and in ILO publication 22 (revised 1980) from the ILO Occupational Safety and Health Series.

(g) *Miner* means any individual including any coal mine construction worker who is working in or at any underground coal mine, but does not include any surface worker who does not have direct contact with underground coal mining or with coal processing operations.

(h) *Operator* means any owner, lessee, or other person who operates, controls, or supervises an underground coal mine or any independent contractor performing services or construction at such mine.

(i) *Panel of 'B' Readers* means the U.S. Public Health Service Consultant Panel of ''B'' Readers, c/o ALOSH, P.O. Box 4258, Morgantown, WV 26505.

(j) *Preemployment physical examination* means any medical examination which includes a chest roentgenographic examination given in accordance with the specifications of this subpart to a person not previously employed by the same operator or at the same mine for which that person is being considered for employment.

(k) *Secretary* means the Secretary of Health and Human Services and any other officer or employee of the Department of Health and Human Services to whom the authority involved may be delegated.

(l) *MSHA* means the Mine Safety and Health Administration, Department of Labor.

[43 FR 33715, Aug. 1, 1978, as amended at 49 FR 7563, Mar. 1, 1984]

§ 37.3 Chest roentgenograms required for miners.

(a) *Voluntary examinations.* Every operator shall provide to each miner who is employed in or at any of its underground coal mines and who was employed in underground coal mining prior to December 30, 1969, or who has completed the required examinations under § 37.3(b) an opportunity for a chest roentgenogram in accordance with this subpart:

(1) Following August 1, 1978 ALOSH will notify the operator of each underground coal mine of a period within which the operator may provide examinations to each miner employed at its coal mine. The period shall begin no sooner than the effective date of these regulations and end no later than a date specified by ALOSH separately for each coal mine. The termination date of the period will be approximately 5 years from the date of the first examination which was made on a miner employed by the operator in its coal mine under the former regulations of this subpart adopted July 27, 1973. Within the period specified by ALOSH for each mine, the operator may select a 6-month period within which to provide examinations in accordance with a plan approved under § 37.5.

Example: ALOSH finds that between July 27, 1973, and March 31, 1975, the first roentgenogram for a miner who was employed at mine Y and who was employed in underground coal mining prior to December 30, 1969, was made on January 1, 1974. ALOSH will notify the operator of mine Y that the operator may select and designate on its plan a 6-month period within which to offer its examinations to its miners employed at mine Y. The 6-month period shall be scheduled between August 1, 1978 and January 1, 1979 (5 years after January 1, 1974).

(2) For all future voluntary examinations, ALOSH will notify the operator of each underground coal mine when sufficient time has elapsed since the end of the previous 6-month period of examinations. ALOSH will specify to the operator of each mine a period within which the operator may provide examinations to its miners employed at its coal mine. The period shall begin no sooner than 3½ years and end no later than 4½ years subsequent to the

ending date of the previous 6-month period specified for a coal mine either by the operator on an approved plan or by ALOSH if the operator did not submit an approved plan. Within the period specified by ALOSH for each mine, the operator may select a 6-month period within which to provide examinations in accordance with a plan approved under § 37.5.

Example: ALOSH finds that examinations were previously provided to miners employed at mine Y in a 6-month period from July 1, 1979, to December 31, 1979. ALOSH notifies the operator at least 3 months before July 1, 1983 (3½ years after December 31, 1979) that the operator may select and designate on its plan the next 6-month period within which to offer examinations to its miners employed at mine Y. The 6-month period shall be scheduled between July 1, 1983, and July 1, 1984 (between 3½ and 4½ years after December 31, 1979).

(3) Within either the next or future period(s) specified by ALOSH to the operator for each of its coal mines, the operator of the coal mine may select a different 6-month period for each of its mines within which to offer examinations. In the event the operator does not submit an approved plan, ALOSH will specify a 6-month period to the operator within which miners shall have the opportunity for examinations.

(b) *Mandatory examinations.* Every operator shall provide to each miner who begins working in or at a coal mine for the first time after December 30, 1969:

(1) An initial chest roentgenogram as soon as possible, but in no event later than 6 months after commencement of employment. A preemployment physical examination which was made within the 6 months prior to the date on which the miner started to work will be considered as fulfilling this requirement. An initial chest roentgenogram given to a miner according to former regulations for this subpart prior to August 1, 1978 will also be considered as fulfilling this requirement.

(2) A second chest roentgenogram, in accordance with this subpart, 3 years following the initial examination if the miner is still engaged in underground coal mining. A second roentgenogram given to a miner according to former regulations under this subpart prior to August 1, 1978 will be considered as fulfilling this requirement.

(3) A third chest roentgenogram 2 years following the second chest roentgenogram if the miner is still engaged in underground coal mining and if the second roentgenogram shows evidence of category 1, category 2, category 3 simple pneumoconioses, or complicated pneumoconioses (ILO Classification).

(c) ALOSH will notify the miner when he or she is due to receive the second or third mandatory examination under (b) of this section. Similarly, ALOSH will notify the coal mine operator when the miner is to be given a second examination. The operator will be notified concerning a miner's third examination only with the miner's written consent, and the notice to the operator shall not state the medical reason for the examination nor that it is the third examination in the series. If the miner is notified by ALOSH that the third mandatory examination is due and the operator is not so notified, availability of the roentgenographic examination under the operator's plan shall constitute the operator's compliance with the requirement to provide a third mandatory examination even if the miner refuses to take the examination.

(d) The opportunity for chest roentgenograms to be available by an operator for purposes of this subpart shall be provided in accordance with a plan which has been submitted and approved in accordance with this subpart.

(e) Any examinations conducted by the Secretary in the National Study of Coal Workers' Pneumoconiosis after January 1, 1977, but before August 1, 1978 shall satisfy the requirements of this section with respect to the specific examination given (see § 37.6(d)).

[43 FR 33715, Aug. 1, 1978; 43 FR 38830, Aug. 31, 1978, as amended at 49 FR 7563, Mar. 1, 1984]

§ 37.4 Plans for chest roentgenographic examinations.

(a) Every plan for chest roentgenographic examinations of miners shall be submitted on forms prescribed by the Secretary to ALOSH within 120 calendar days after August 1, 1978. In the case of a person who after August 1, 1978, becomes an operator of a mine for which no plan has been approved, that person shall submit a plan within 60 days after such event occurs.

A separate plan shall be submitted by the operator and by each construction contractor for each underground coal mine which has a MSHA identification number. The plan shall include:

(1) The name, address, and telephone number of the operator(s) submitting the plan;

(2) The name, MSHA identification number for respirable dust measurements, and address of the mine included in the plan;

(3) The proposed beginning and ending date of the 6-month period for voluntary examinations (see § 37.3(a)) and the estimated number of miners to be given or offered examinations during the 6-month period under the plan;

(4) The name and location of the approved X-ray facility or facilities, and the approximate date(s) and time(s) of day during which the roentgenograms will be given to miners to enable a determination of whether the examinations will be conducted at a convenient time and place;

(5) If a mobile facility is proposed, the plan shall provide that each miner be given adequate notice of the opportunity to have the examination and that no miner shall have to wait for an examination more than 1 hour before or after his or her work shift. In addition, the plan shall include:

(i) The number of change houses at the mine.

(ii) One or more alternate nonmobile approved facilities for the reexamination of miners and for the mandatory examination of miners when necessary (see § 37.3(b)), or an assurance that the mobile facility will return to the location(s) specified in the plan as frequently as necessary to provide for examinations in accordance with these regulations.

(iii) The name and location of each change house at which examinations will be given. For mines with more than one change house, the examinations shall be given at each change house or at a change house located at a convenient place for each miner.

(6) The name and address of the ''A'' or ''B'' reader who will interpret and classify the chest roentgenograms.

(7) Assurances that: (i) The operator will not solicit a physician's roentgenographic or other findings concerning any miner employed by the operator,

(ii) Instructions have been given to the person(s) giving the examinations that duplicate roentgenograms or copies of roentgenograms will not be made and that (except as may be necessary for the purpose of this subpart) the physician's roentgenographic and other findings, as well as the occupational history information obtained from a miner unless obtained prior to employment in a preemployment examination, and disclosed prior to employment, will not be disclosed in a manner which will permit identification of the employee with the information about him, and

(iii) The roentgenographic examinations will be made at no charge to the miner.

(b) Operators may provide for alternate facilities and ''A'' or ''B'' readers in plans submitted for approval.

(c) The change of operators of any mine operating under a plan approved pursuant to § 37.5 shall not affect the plan of the operator which has transferred responsibility for the mine. Every plan shall be subject to revision in accordance with paragraph (d) of this section.

(d) The operator shall advise ALOSH of any change in its plan. Each change in an approved plan is subject to the same review and approval as the originally approved plan.

(e) The operator shall promptly display in a visible location on the bulletin board at the mine its proposed plan or proposed change in plan when it is submitted to ALOSH. The proposed plan or change in plan shall remain posted in a visible location on the bulletin board until ALOSH either grants or denies approval of it at which time the approved plan or denial of approval shall be permanently posted. In the case of an operator who is a construction contractor and who does not have a bulletin board, the construction contractor must otherwise notify its employees of the examination arrangements. Upon request, the contractor must show ALOSH written evidence that its employees have been notified.

(f) Upon notification from ALOSH that sufficient time has elapsed since the previous period of examinations,

the operator will resubmit its plan for each of its coal mines to ALOSH for approval for the next period of examinations (see § 37.3(a)(2)). The plan shall include the proposed beginning and ending dates of the next period of examinations and all information required by paragraph (a) of this section.

[43 FR 33715, Aug. 1, 1978; 43 FR 38830, Aug. 31, 1978]

§ 37.5 Approval of plans.

(a) Approval of plans granted prior to August 1, 1978 is no longer effective.

(b) If, after review of any plan submitted pursuant to this subpart, the Secretary determines that the action to be taken under the plan by the operator meets the specifications of this subpart and will effectively achieve its purpose, the Secretary will approve the plan and notify the operator(s) submitting the plan of the approval. Approval may be conditioned upon such terms as the Secretary deems necessary to carry out the purpose of section 203 of the act.

(c) Where the Secretary has reason to believe that he will deny approval of a plan he will, prior to the denial, give reasonable notice in writing to the operator(s) of an opportunity to amend the plan. The notice shall specify the ground upon which approval is proposed to be denied.

(d) If a plan is denied approval, the Secretary shall advise the operator(s) in writing of the reasons for the denial.

§ 37.6 Chest roentgenographic examinations conducted by the Secretary.

(a) The Secretary will give chest roentgenograms or make arrangements with an appropriate person, agency, or institution to give the chest roentgenograms and with ''A'' or ''B'' readers to interpret the roentgenograms required under this subpart in the locality where the miner resides, at the mine, or at a medical facility easily accessible to a mining community or mining communities, under the following circumstances:

(1) Where, in the judgment of the Secretary, due to the lack of adequate medical or other necessary facilities or personnel at the mine or in the locality where the miner resides, the required roentgenographic examination cannot be given.

(2) Where the operator has not submitted an approvable plan.

(3) Where, after commencement of an operator's program pursuant to an approved plan and after notice to the operator of his failure to follow the approved plan and, after allowing 15 calendar days to bring the program into compliance, the Secretary determines and notifies the operator in writing that the operator's program still fails to comply with the approved plan.

(b) The operator of the mine shall reimburse the Secretary or other person, agency, or institution as the Secretary may direct, for the cost of conducting each examination made in accordance with this section.

(c) All examinations given or arranged by the Secretary will comply with the time requirements of § 37.3. Whenever the Secretary gives or arranges for the examinations of miners at a time, a written notice of the arrangements will be sent to the operator who shall post the notice on the mine bulletin board.

(d) Operators of mines selected by ALOSH to participate in the National Study of Coal Workers' Pneumoconiosis (an epidemiological study of respiratory diseases in coal miners) and who agree to cooperate will have all their miners afforded the opportunity to have a chest roentgenogram required hereunder at no cost to the operator. For future examinations and for mandatory examinations each participating operator shall submit an approvable plan.

§ 37.7 Transfer of affected miner to less dusty area.

(a) Any miner who, in the judgment of the Secretary based upon the interpretation of one or more of the miner's chest roentgenograms, shows category 1 (1/0, 1/1, 1/2), category 2 (2/1, 2/2, 2/3), or category 3 (3/2, 3/3, 3/4) simple pneumoconioses, or complicated pneumoconioses (ILO Classification) shall be afforded the option of transferring from his or her position to another position in an area of the mine where the concentration of respirable dust in the mine atmosphere is not more than 1.0 mg/m^3 of air, or if such level is not

attainable in the mine, to a position in the mine where the concentration of respirable dust is the lowest attainable below 2.0 mg/m^3 of air.

(b) Any transfer under this section shall be in accordance with the procedures specified in part 90 of title 30, Code of Federal Regulations.

[43 FR 33715, Aug. 1, 1978; 43 FR 38830, Aug. 31, 1978, as amended at 44 FR 23085, Apr. 18, 1979; 49 FR 7563, Mar. 1, 1984]

§ 37.8 Roentgenographic examination at miner's expense.

Any miner who wishes to obtain an examination at his or her own expense at an approved facility and to have submitted to NIOSH for him or her a complete examination may do so, provided that the examination is made no sooner than 6 months after the most recent examination of the miner submitted to ALOSH. ALOSH will provide an interpretation and report of the examinations made at the miner's expense in the same manner as if it were submitted under an operator's plan. Any change in the miner's transfer rights under the act which may result from this examination will be subject to the terms of § 37.7.

§ 37.20 Miner identification document.

As part of the roentgenographic examination, a miner identification document which includes an occupational history questionnaire shall be completed for each miner at the facility where the roentgenogram is made at the same time the chest roentgenogram required by this subpart is given.

SPECIFICATIONS FOR PERFORMING CHEST ROENTGENOGRAPHIC EXAMINATIONS

§ 37.40 General provisions.

(a) The chest roentgenographic examination shall be given at a convenient time and place.

(b) The chest roentgenographic examination consists of the chest roentgenogram, and a complete Roentgenographic Interpretation Form (Form CDC/NIOSH (M) 2.8), and miner identification document.

(c) A roentgenographic examination shall be made in a facility approved in accordance with § 37.42 by or under the supervision of a physician who regularly makes chest roentgenograms and who has demonstrated ability to make chest roentgenograms of a quality to best ascertain the presence of pneumoconiosis.

§ 37.41 Chest roentgenogram specifications.

(a) Every chest roentgenogram shall be a single posteroanterior projection at full inspiration on a film being no less than 14 by 17 inches and no greater than 16 by 17 inches. The film and cassette shall be capable of being positioned both vertically and horizontally so that the chest roentgenogram will include both apices and costophrenic angles. If a miner is too large to permit the above requirements, then the projection shall include both apices with minimum loss of the costophrenic angle.

(b) Miners shall be disrobed from the waist up at the time the roentgenogram is given. The facility shall provide a dressing area and for those miners who wish to use one, the facility shall provide a clean gown. Facilities shall be heated to a comfortable temperature.

(c) Roentgenograms shall be made only with a diagnostic X-ray machine having a rotating anode tube with a maximum of a 2 mm. source (focal spot).

(d) Except as provided in paragraph (e) of this section, roentgenograms shall be made with units having generators which comply with the following: (1) The generators of existing roentgenographic units acquired by the examining facility prior to July 27, 1973, shall have a minimum rating of 200 mA at 100 kVp.; (2) generators of units acquired subsequent to that date shall have a minimum rating of 300 mA at 125 kVp.

NOTE: A generator with a rating of 150 kVp. is recommended.

(e) Roentgenograms made with battery-powered mobile or portable equipment shall be made with units having a minimum rating of 100 mA at 110 kVp. at 500 Hz, or of 200 mA at 110 kVp. at 60 Hz.

(f) Capacitor discharge and field emission units may be used if the model of such units is approved by

ALOSH for quality, performance, and safety. ALOSH will consider such units for approval when listed by a facility seeking approval under § 37.42 of this subpart.

(g) Roentgenograms shall be given only with equipment having a beam-limiting device which does not cause large unexposed boundaries. The beam limiting device shall provide rectangular collimation and shall be of the type described in part F of the suggested State regulations for the control of radiation or (for beam limiting devices manufactured after August 1, 1974) of the type specified in 21 CFR 1020.31. The use of such a device shall be discernible from an examination of the roentgenogram.

(h) To insure high quality chest roentgenograms:

(1) The maximum exposure time shall not exceed 1/20 of a second except that with single phase units with a rating less than 300 mA at 125 kVp. and subjects with chests over 28 cm. posteroanterior, the exposure may be increased to not more than 1/10 of a second;

(2) The source or focal spot to film distance shall be at least 6 feet;

(3) Medium speed film and medium speed intensifying screens are recommended. However, any film-screen combination, the rated ''speed'' of which is at least 100 and does not exceed 300, which produces roentgenograms with spatial resolution, contrast, latitude and quantum mottle similar to those of systems designated as ''medium speed'' may be employed;

(4) Film-screen contact shall be maintained and verified at 6 month or shorter intervals;

(5) Intensifying screens shall be inspected at least once a month and cleaned when necessary by the method recommended by the manufacturer;

(6) All intensifying screens in a cassette shall be of the same type and made by the same manufacturer;

(7) When using over 90 kV., a suitable grid or other means of reducing scattered radiation shall be used;

(8) The geometry of the radiographic system shall insure that the central axis (ray) of the primary beam is perpendicular to the plane of the film surface and impinges on the center of the film;

(9) A formal quality assurance program shall be established at each facility.

(i) Radiographic processing:

(1) Either automatic or manual film processing is acceptable. A constant time-temperature technique shall be meticulously employed for manual processing.

(2) If mineral or other impurities in the processing water introduce difficulty in obtaining a high-quality roentgenogram, a suitable filter or purification system shall be used.

(j) Before the miner is advised that the examination is concluded, the roentgenogram shall be processed and inspected and accepted for quality by the physician, or if the physician is not available, acceptance may be made by the radiologic technologist. In a case of a substandard roentgenogram, another shall be immediately made. All substandard roentgenograms shall be clearly marked as rejected and promptly sent to ALOSH for disposal.

(k) An electric power supply shall be used which complies with the voltage, current, and regulation specified by the manufacturer of the machine.

(l) A densitometric test object may be required on each roentgenogram for an objective evaluation of film quality at the discretion of ALOSH.

(m) Each roentgenogram made hereunder shall be permanently and legibly marked with the name and address or ALOSH approval number of the facility at which it is made, the social security number of the miner, and the date of the roentgenogram. No other identifying markings shall be recorded on the roentgenogram.

[43 FR 33715, Aug. 1, 1978, as amended at 52 FR 7866, Mar. 13, 1987]

§ 37.42 Approval of roentgenographic facilities.

(a) Approval of roentgenographic facilities given prior to January 1, 1976, shall terminate upon August 1, 1978 unless each of the following conditions have been met:

(1) The facility must verify that it still meets the requirements set forth in the regulations for the second round of roentgenographic examinations (38

FR 20076) and it has not changed equipment since it was approved by NIOSH.

(2) From July 27, 1973, to January 1, 1976, the facility submitted to ALOSH at least 50 roentgenograms which were interpreted by one or more ''B'' readers not employed by the facility who found no more than 5 percent of all the roentgenograms unreadable.

(b) Other facilities will be eligible to participate in this program when they demonstrate their ability to make high quality diagnostic chest roentgenograms by submitting to ALOSH six or more sample chest roentgenograms made and processed at the applicant facility and which are of acceptable quality to the Panel of ''B'' readers. Applicants shall also submit a roentgenogram of a plastic step-wedge object (available on loan from ALOSH) which was made and processed at the same time with the same technique as the roentgenograms submitted and processed at the facility for which approval is sought. At least one chest roentgenogram and one test object roentgenogram shall have been made with each unit to be used hereunder. All roentgenograms shall have been made within 15 calendar days prior to submission and shall be marked to identify the facility where each roentgenogram was made, the X-ray machine used, and the date each was made. The chest roentgenograms will be returned and may be the same roentgenograms submitted pursuant to § 37.51.

NOTE: The plastic step-wedge object is described in an article by E. Dale Trout and John P. Kelley appearing in ''The American Journal of Roentgenology, Radium Therapy and Nuclear Medicine,'' Vol. 117, No. 4, April 1973.

(c) Each roentgenographic facility submitting chest roentgenograms for approval under this section shall complete and include an X-ray facility document describing each X-ray unit to be used to make chest roentgenograms under the act. The form shall include: (1) The date of the last radiation safety inspection by an appropriate licensing agency or, if no such agency exists, by a qualified expert as defined in NCRP Report No. 33 (see § 37.43); (2) the deficiencies found; (3) a statement that all the deficiencies have been corrected; and (4) the date of acquisition of the X-ray unit. To be acceptable, the radiation safety inspection shall have been made within 1 year preceding the date of application.

(d) Roentgenograms submitted with applications for approval under this section will be evaluated by the panel of ''B'' Readers or by a qualified radiological physicist or consultant. Applicants will be advised of any reasons for denial of approval.

(e) ALOSH or its representatives may make a physical inspection of the applicant's facility and any approved roentgenographic facility at any reasonable time to determine if the requirements of this subpart are being met.

(f) ALOSH may require a facility periodically to resubmit roentgenograms of a plastic step-wedge object, sample roentgenograms, or a Roentgenographic Facility Document for quality control purposes. Approvals granted hereunder may be suspended or withdrawn by notice in writing when in the opinion of ALOSH the quality of roentgenograms or information submitted under this section warrants such action. A copy of a notice withdrawing approval will be sent to each operator who has listed the facility as its facility for giving chest roentgenograms and shall be displayed on the mine bulletin board adjacent to the operator's approved plan. The approved plan will be reevaluated by ALOSH in light of this change.

[43 FR 33715, Aug. 1, 1978; 43 FR 38830, Aug. 31, 1978]

§ 37.43 Protection against radiation emitted by roentgenographic equipment.

Except as otherwise specified in § 37.41, roentgenographic equipment, its use and the facilities (including mobile facilities) in which such equipment is used, shall conform to applicable State and Federal regulations (See 21 CFR part 1000). Where no applicable regulations exist, roentgenographic equipment, its use and the facilities (including mobile facilities) in which such equipment is used shall conform to the recommendations of the National Council on Radiation Protection and Measurements in NCRP Report No. 33

''Medical X-ray and Gamma-Ray Protection for Energies up to 10 MeV—Equipment Design and Use'' (issued February 1, 1968), in NCRP Report No. 48, ''Medical Radiation Protection for Medical and Allied Health Personnel'' (issued August 1, 1976), and in NCRP Report No. 49, ''Structural Shielding Design and Evaluation for Medical Use of X-rays and Gamma Rays of up to 10 MeV'' (issued September 15, 1976). These documents are hereby incorporated by reference and made a part of this subpart. These documents are available for examination at ALOSH, 944 Chestnut Ridge Road, Morgantown, WV 26505, and at the National Institute for Occupational Safety and Health, 5600 Fishers Lane, Rockville, MD 20857. Copies of NCRP Reports Nos. 33, 48, and 49 may be purchased for $3, $4.50, and $3.50 each, respectively, from NCRP Publications, P.O. Box 30175, Washington, DC 20014.

SPECIFICATIONS FOR INTERPRETATION, CLASSIFICATION, AND SUBMISSION OF CHEST ROENTGENOGRAMS

§ 37.50 Interpreting and classifying chest roentgenograms.

(a) Chest roentgenograms shall be interpreted and classified in accordance with the ILO Classification system and recorded on a Roentgenographic Interpretation Form (Form CDC/NIOSH (M)2.8).

(b) Roentgenograms shall be interpreted and classified only by a physician who regularly reads chest roentgenograms and who has demonstrated proficiency in classifying the pneumoconioses in accordance with § 37.51.

(c) All interpreters, whenever interpreting chest roentgenograms made under the Act, shall have immediately available for reference a complete set of the ILO International Classification of Radiographs for Pneumoconioses, 1980.

NOTE: This set is available from the International Labor Office, 1750 New York Avenue, NW., Washington, DC 20006 (Phone: 202/376–2315).

(d) In all view boxes used for making interpretations:

(1) Fluorescent lamps shall be simultaneously replaced with new lamps at 6-month intervals;

(2) All the fluorescent lamps in a panel of boxes shall have identical manufacturer's ratings as to intensity and color;

(3) The glass, internal reflective surfaces, and the lamps shall be kept clean;

(4) The unit shall be so situated as to minimize front surface glare.

[43 FR 33715, Aug. 1, 1978, as amended at 49 FR 7564, Mar. 1, 1984]

§ 37.51 Proficiency in the use of systems for classifying the pneumoconioses.

(a) First or ''A'' readers:

(1) Approval as an ''A'' reader shall continue if established prior to (insert) effective date of these regulations).

(2) Physicians who desire to be ''A'' readers must demonstrate their proficiency in classifying the pneumoconioses by either:

(i) Submitting to ALOSH from the physician's files six sample chest roentgenograms which are considered properly classified by the Panel of ''B'' readers. The six roentgenograms shall consist of two without pneumoconiosis, two with simple pneumoconiosis, and two with complicated pneumoconiosis. The films will be returned to the physician. The interpretations shall be on the Roentgenographic Interpretation Form (Form CDC/NIOSH (M) 2.8) (These may be the same roentgenograms submitted pursuant to § 37.42), or;

(ii) Satisfactory completion, since June 11, 1970, of a course approved by ALOSH on the ILO or ILO-U/C Classification systems or the UICC/Cincinnati classification system. As used in this subparagraph, ''UICC/Cincinnati classification'' means the classification of the pneumoconioses devised in 1968 by a Working Committee of the International Union Against Cancer.

(b) Final or ''B'' readers:

(1) Approval as a ''B'' reader established prior to October 1, 1976, shall hereby be terminated.

(2) Proficiency in evaluating chest roentgenograms for roentgenographic

quality and in the use of the ILO Classification for interpreting chest roentgenograms for pneumoconiosis and other diseases shall be demonstrated by those physicians who desire to be ''B'' readers by taking and passing a specially designed proficiency examination given on behalf of or by ALOSH at a time and place specified by ALOSH. Each physician must bring a complete set of the ILO standard reference radiographs when taking the examination. Physicians who qualify under this provision need not be qualified under paragraph (a) of this section.

(c) Physicians who wish to participate in the program shall make application on an Interpreting Physician Certification Document (Form CDC/NIOSH (M) 2.12).

[43 FR 33715, Aug. 1, 1978, as amended at 49 FR 7564, Mar. 1, 1984]

§ 37.52 Method of obtaining definitive interpretations.

(a) All chest roentgenograms which are first interpreted by an ''A'' or ''B'' reader will be submitted by ALOSH to a ''B'' reader qualified as described in § 37.51. If there is agreement between the two interpreters as defined in paragraph (b) of this section the result shall be considered final and reported to MSHA for transmittal to the miner. When in the opinion of ALOSH substantial agreement is lacking, ALOSH shall obtain additional interpretations from the Panel of ''B'' readers. If interpretations are obtained from two or more ''B'' readers, and if two or more are in agreement then the highest major category shall be reported.

(b) Two interpreters shall be considered to be in agreement when they both find either stage A, B, or C complicated pneumoconiosis, or their findings with regard to simple pneumoconiosis are both in the same major category, or (with one exception noted below) are within one minor category (ILO Classification 12-point scale) of each other. In the last situation, the higher of the two interpretations shall be reported. The only exception to the one minor category principle is a reading sequence of 0/1, 1/0, or 1/0, 0/1. When such a sequence occurs, it shall not be considered agreement, and a third (or more) interpretation shall be obtained until a consensus involving two or more readings in the same major category is obtained.

[43 FR 33715, Aug. 1, 1978, as amended at 49 FR 7564, Mar. 1, 1984; 52 FR 7866, Mar. 13, 1987]

§ 37.53 Notification of abnormal roentgenographic findings.

(a) Findings of, or findings suggesting, enlarged heart, tuberculosis, lung cancer, or any other significant abnormal findings other than pneumoconiosis shall be communicated by the first physician to interpret and classify the roentgenogram to the designated physician of the miner indicated on the miner's identifcation document. A copy of the communication shall be submitted to ALOSH. ALOSH will notify the miner to contact his or her physician when any physician who interprets and classifies the miner's roentgenogram reports significant abnormal findings other than pneumoconiosis.

(b) In addition, when ALOSH has more than one roentgenogram of a miner in its files and the most recent examination was interpreted to show enlarged heart, tuberculosis, cancer, complicated pneumoconiosis, and any other significant abnormal findings, ALOSH will submit all of the miner's roentgenograms in its files with their respective interprtations to a ''B'' reader. The ''B'' reader will report any significant changes or progression of disease or other comments to ALOSH and ALOSH shall submit a copy of the report to the miner's designated physician.

(c) All final findings regarding pneumoconiosis will be sent to the miner by MSHA in accordance with section 203 of the act (see 30 CFR part 90). Positive findings with regard to pneumoconiosis will be reported to the miner's designated physician by ALOSH.

(d) ALOSH will make every reasonable effort to process the findings described in paragraph (c) of this section within 60 days of receipt of the information described in § 37.60 in a complete and acceptable form. The information forwarded to MSHA will be in a form intended to facilitate prompt dispatch of the findings to the miner. The results of an examination made of a miner will not be processed by ALOSH if the examination was made within 6

months of the date of a previous acceptable examination.

§ 37.60 Submitting required chest roentgenograms and miner identification documents.

(a) Each chest roentgenogram required to be made under this subpart, together with the completed roentgenographic interpretation form and the completed miner identification document, shall be sumitted together for each miner to ALOSH within 14 calendar days after the roentgenographic examination is given and become the property of ALOSH.

(b) If ALOSH deems any part submitted under paragraph (a) of this section inadequate, it will notify the operator of the deficiency. The operator shall promptly make appropriate arrangements for the necessary reexamination.

(c) Failure to comply with paragraph (a) or (b) of this section shall be cause to revoke approval of a plan or any other approval as may be appropriate. An approval which has been revoked may be reinstated at the discretion of ALOSH after it receives satisfactory assurances and evidence that all deficiencies have been corrected and that effective controls have been instituted to prevent a recurrence.

(d) Chest roentgenograms and other required documents shall be submitted only for miners. Results of preemployment physical examinations of persons who are not hired shall not be submitted.

(e) If a miner refuses to participate in all phases of the examination prescribed in this subpart, no report need be made. If a miner refuses to participate in any phase of the examination prescribed in this subpart, all the forms shall be submitted with his or her name and social security account number on each. If any of the forms cannot be completed because of the miner's refusal, it shall be marked ''Miner Refuses,'' and shall be submitted. No submission shall be made, however, without a completed miner identification document containing the miner's name, address, social security number and place of employment.

REVIEW AND AVAILABILITY OF RECORDS

§ 37.70 Review of interpretations.

(a) Any miner who believes the interpretation for pneumoconiosis reported to him or her by MSHA is in error may file a written request with ALOSH that his or her roentgenogram be reevaluated. If the interpretation was based on agreement between an ''A'' reader and a ''B'' reader, ALOSH will obtain one or more additional interpretations by ''B'' readers as necessary to obtain agreement in accord with § 37.52(b), and MSHA shall report the results to the miner together with any rights which may accrue to the miner in accordance with § 37.7. If the reported interpretation was based on agreement between two (or more) ''B'' readers, the reading will be accepted as conclusive and the miner shall be so informed by MSHA.

(b) Any operator who is directed by MSHA to transfer a miner to a less dusty atmosphere based on the most recent examination made subsequent to August 1, 1978, may file a written request with ALOSH to review its findings. The standards set forth in paragraph (a) of this section apply and the operator and miner will be notified by MSHA whether the miner is entitled to the option to transfer.

§ 37.80 Availability of records.

(a) Medical information and roentgenograms on miners will be released by ALOSH only with the written consent from the miner, or if the miner is deceased, written consent from the miner's widow, next of kin, or legal representative.

(b) To the extent authorized, roentgenograms will be made available for examination only at ALOSH.

Subpart—Autopsies

AUTHORITY: Sec. 508, 83 Stat. 803; 30 U.S.C. 957.

SOURCE: 36 FR 8870, May 14, 1971, unless otherwise noted.

§ 37.200 Scope.

The provisions of this subpart set forth the conditions under which the

Secretary will pay pathologists to obtain results of autopsies performed by them on miners.

§ 37.201 Definitions.

As used in this subpart:

(a) *Secretary* means the Secretary of Health and Human Services.

(b) *Miner* means any individual who during his life was employed in any underground coal mine.

(c) *Pathologist* means

(1) A physician certified in anatomic pathology or pathology by the American Board of Pathology or the American Osteopathic Board of Pathology,

(2) A physician who possesses qualifications which are considered ''Board of eligible'' by the American Board of Pathology or American Osteopathic Board of Pathology, or

(3) An intern, resident, or other physician in a training program in pathology who performs the autopsy under the supervision of a pathologist as defined in paragraph (c) (1) or (2) of this section.

(d) *ALFORD* means the Appalachian Laboratory for Occupational Respiratory Diseases, Public Health Service, Department of Health and Human Services, Post Office Box 4257, Morgantown, WV 26505.

§ 37.202 Payment for autopsy.

(a) The Secretary will pay up to $200 to any pathologist who, after the effective date of the regulations in this part and with legal consent:

(1) Performs an autopsy on a miner in accordance with this subpart; and

(2) Submits the findings and other materials to ALFORD in accordance with this subpart within 180 calendar days after having performed the autopsy; and

(3) Receives no other specific payment, fee, or reimbursement in connection with the autopsy from the miner's widow, his family, his estate, or any other Federal agency.

(b) The Secretary will pay to any pathologist entitled to payment under paragraph (a) of this section and additional $10 if the pathologist can obtain and submits a good quality copy or original of a chest roentgenogram (posteroanterior view) made of the subject of the autopsy within 5 years prior to his death together with a copy of any interpretation made.

[35 FR 13206, Aug. 19, 1970, as amended at 38 FR 16353, June 22, 1973]

§ 37.203 Autopsy specifications.

(a) Every autopsy for which a claim for payment is submitted pursuant to this part:

(1) Shall be performed consistent with standard autopsy procedures such as those, for example, set forth in the ''Autopsy Manual'' prepared by the Armed Forces Institute of Pathology, July 1, 1960. (Technical Manual No. 8–300. NAVMED P–5065, Air Force Manual No. 160–19.) Copies of this document may be borrowed from ALFORD.

(2) Shall include:

(i) Gross and microscopic examination of the lungs, pulmonary pleura, and tracheobronchial lymph nodes;

(ii) Weights of the heart and each lung (these and all other measurements required under this subparagraph shall be in the metric system);

(iii) Circumference of each cardiac valve when opened;

(iv) Thickness of right and left ventricles; these measurements shall be made perpendicular to the ventricular surface and shall not include trabeculations or pericardial fat. The right ventricle shall be measured at a point midway between the tricuspid valve and the apex, and the left ventricle shall be measured directly above the insertion of the anterior papillary muscle;

(v) Size, number, consistency, location, description and other relevant details of all lesions of the lungs;

(vi) Level of the diaphragm;

(vii) From each type of suspected pneumoconiotic lesion, representative microscopic slides stained with hematoxylin eosin or other appropriate stain, and one formalin fixed, paraffin-impregnated block of tissue; a minimum of three stained slides and three blocks of tissue shall be submitted. When no such lesion is recognized, similar material shall be submitted from three separate areas of the lungs selected at random; a minimum of three stained slides and three formalin fixed, paraffin-impregnated blocks of tissue shall be submitted.

(b) Needle biopsy techniques shall not be used.

§ 37.204 Procedure for obtaining payment.

Every claim for payment under this subpart shall be submitted to ALFORD and shall include:

(a) An invoice (in duplicate) on the pathologist's letterhead or billhead indicating the date of autopsy, the amount of the claim and a signed statement that the pathologist is not receiving any other specific compensation for the autopsy from the miner's widow, his surviving next-of-kin, the estate of the miner, or any other source.

(b) Completed PHS Consent, Release and History Form (See Fig. 1). This form may be completed with the assistance of the pathologist, attending physician, family physician, or any other responsible person who can provide reliable information.

(c) Report of autopsy:

(1) The information, slides, and blocks of tissue required by this subpart.

(2) Clinical abstract of terminal illness and other data that the pathologist determines is relevant.

(3) Final summary, including final anatomical diagnoses, indicating presence or absence of simple and complicated pneumoconiosis, and correlation with clinical history if indicated.

FIGURE 1

U.S. DEPARTMENT OF HEALTH AND HUMAN SERVICES

PUBLIC HEALTH SERVICE—NATIONAL COAL WORKERS' AUTOPSY STUDY

Consent, Release, and History Form Federal Coal Mine Health and Safety Act of 1969

I, _____, (Name) _____ (Relationship) of _____, (Name of deceased miner) do hereby authorize the performance of an autopsy (_____) (Limitation, if any, on autopsy) on said deceased. I understand that the report and certain tissues as necessary will be released to the United States Public Health Service and to _____ (Name of Physician securing autopsy)

I understand that any claims in regard to the deceased for which I may sign a general release of medical information will result in the release of the information from the Public Health Service. I further understand that I shall not make any payment for the autopsy.

Occupational and Medical History

1. Date of Birth of Deceased _____. (Month, Day, Year)
2. Social Security Number of Deceased _____.
3. Date and Place of Death _____, (Month, Day, Year) _____ (City, County, State).
4. Place of Last Mining Employment:
Name of Mine _____
Name of Mining Company _____
Mine Address _____
5. Last Job Title at Mine of Last Employment
(e.g., Continuous Miner Operator, motorman, foreman, etc.)
6. Job Title of Principal Mining Occupation (that job to which miner devoted the most number of years)
(e.g., Same as above)
7. Smoking History of Miner:
(a) Did he ever smoke cigarettes? Yes No _____
(b) If yes, for how many years?_____ Years.
(c) If yes, how many cigarettes per day did he smoke on the average?_____
(Number of) Cigarettes per day.
(d) Did he smoke cigarettes up until the time of his death? Yes _____ No _____
(e) If no to (d), for how long before he died had he not been smoking cigarettes?
8. Total Years in Surface and Underground Employment in Coal Mining, by State (If known) _____, (Years) _____ (State).
9. Total Years in *Underground* Coal Mining Employment, by State (If known) _____, (Years) _____ (State).

_____
(Signature)

_____
(Address)

_____
(Date)

Interviewer: _____

PART 38—DISASTER ASSISTANCE FOR CRISIS COUNSELING AND TRAINING

Sec.

38.1 Purpose; coordination.
38.2 Definitions.
38.3 Assistance; procedures, limitations.
38.4 Contracts.
38.5 Grant assistance.
38.6 Nondiscrimination.
38.7 Nonliability.
38.8 Criminal and civil penalties.
38.9 Federal audits.

AUTHORITY: Sec. 413, Pub. L. 93–288. The Disaster Relief Act of 1974, 88 Stat. 157, 42 U.S.C. 5183, EO 11795, 39 FR 25939, as amended by EO 11910, 41 FR 15681.

SOURCE: 41 FR 52052, Nov. 26, 1976, unless otherwise noted.

§ 38.1 Purpose; coordination.

(a) *Purpose.* This part establishes standards and procedures for the implementation of section 413 of Pub. L. 93–288, the Disaster Relief Act of 1974 (42 U.S.C. 5183) which authorizes the provision, either directly or through financial assistance to State or local agencies or private mental health organizations, of:

(1) Professional counseling services to victims of a major disaster in order to relieve mental health problems caused or aggravated by such a major disaster or its aftermath; and

(2) Training of disaster workers to provide or assist in providing those professional counseling services.

(b) *Coordination.* The Secretary, acting through the National Institute of Mental Health, will, as provided in 24 CFR 2205.51, carry out section 413 of the Act and this part in coordination with and under the general policy guidance of, the Administrator of the Federal Disaster Assistance Administration. Contracts and grants awarded under this part are subject to all applicable provisions of the Act and the implementing regulations promulgated by the Administrator (24 CFR part 2205).

§ 38.2 Definitions.

All terms not defined herein shall have the same meaning as given them in the Act. As used in this part:

(a) *Act* means the Disaster Relief Act of 1974 (42 U.S.C. 5121, *et seq.*).

(b) *Administrator* means the Administrator, Federal Disaster Assistance Administration (FDAA), Department of Housing and Urban Development, and any other person to whom he delegates the authority.

(c) *Contractor* means any public agency or private mental health organization which, pursuant to this part, contracts with the Secretary to provide professional mental health crisis counseling services or to provide mental health training for disaster workers.

(d) *Crisis* means the existence of any life situation resulting from a major disaster or its aftermath which so effects the emotional and mental equilibrium of a disaster victim that professional mental health counseling services should be provided to help preclude possible damaging physical or psychological effects.

(e) *Disaster workers* means mental health specialists such as psychiatrists, psychologists, psychiatric nurses, social workers, or qualified agents thereof.

(f) *Federal Coordinating Officer* means the person appointed by the Administrator to coordinate Federal assistance in a major disaster.

(g) *Governor* means the chief executive of a State.

(h) *Grantee* means any public agency or private nonprofit mental health organization which, pursuant to this part, is awarded a grant for the purpose of providing professional mental health crisis counseling services or mental health training for disaster workers.

(i) *Major disaster* means any hurricane, tornado, storm, flood, highwater, wind-driven water, tidal wave, tsunami, earthquake, volcanic eruption, landslide, mudslide, snowstorm, drought, fire, explosion, or other catastrophe in any part of the United States which, in the determination of the President, causes damage of sufficient severity and magnitude to warrant major disaster assistance under the Act above and beyond emergency services by the Federal Government, to supplement the efforts and available resources of the States, local governments, and disaster relief organizations, in alleviating the damage, loss, hardship, or suffering caused thereby.

(j) *Regional Director* means a director of a regional office of the Federal Disaster Assistance Administration (FDAA).

(k) *Secretary* means the Secretary of Health and Human Services and any other officer or employee of the Department of Health and Human Services to whom the authority involved has been delegated.

(l) *State* means any of the fifty States, the District of Columbia, Puerto Rico, the Virgin Islands, Guam, American Samoa, the Canal Zone, or

the Trust Territory of the Pacific Islands.

(m) *State Coordinating Officer* means the person appointed by the Governor to act in cooperation with the appointed Federal Coordinating Officer.

(n) *Training* means the specific instruction which may be required to enable disaster workers to provide professional mental health crisis counseling to victims of a major disaster or its aftermath.

§ 38.3 Assistance; procedures, limitations.

(a) *Application*. In order to obtain assistance under this part, the Governor or his State Coordinating Officer must, not later than 60 days following a major disaster declaration by the President, file with the appropriate Regional Director a request which includes:

(1) An estimate of the number of disaster victims who may need professional mental health crisis counseling services and of the number of disaster workers who may need training in the provision of such services;

(2) Identification of the geographical areas in which the need exists;

(3) An estimate of the period during which assistance under this part will be required and of the total funds which will be required to provide such assistance;

(4) A description of the types of mental health problems caused or aggravated by the major disaster or its aftermath; and

(5) Identification of the State and local agencies and private mental health organizations capable of providing professional mental health crisis counseling to disaster victims or training of disaster workers.

(b) *Review, approval*. The Secretary, upon notification by the Administrator of a State request for assistance under this part, will conduct a review to determine the extent to which such assistance is needed to supplement assistance programs provided by State and local governments and private organizations and, on the basis of that review, prepare and submit a recommendation and report for consideration by the Administrator. Upon approval by the Administrator and his advancement of funds for carrying out the approved assistance, the Secretary may, within the limits of the funds advanced, provide the approved services either directly or through a grant or contract.

(c) *Eligibility for services*. (1) In order to be eligible for the professional mental health crisis counseling services available under this part an individual must:

(i) Have been located within the designated major disaster area or have been a resident of such area at the time of the major disaster or its aftermath; and

(ii) Have a mental health problem which was caused or aggravated by the major disaster or its aftermath.

(2) Disaster workers who are available on short notice to provide professional mental health crisis counseling services in a major disaster area are eligible for training under this part.

(d) *Time limitation*. Contracts and grants awarded under this part will not continue beyond 180 days after the first day services are provided pursuant to such contracts and grants, except that upon the recommendation of the Secretary (1) the Regional Director may extend the 180 day period for up to 30 days or (2) the Administrator may extend the 180 day period for more than 30 days.

§ 38.4 Contracts.

(a) *Eligibility*. Public agencies and private mental health organizations which are determined by the Secretary to be capable of providing the professional mental health crisis counseling services or mental health training of disaster workers needed as a result of a major disaster are eligible for the award of a contract under this part.

(b) *Use of local agencies*. Preference will be given to the extent feasible and practicable, to those agencies and organizations which are located or do business primarily in the area affected by the major disaster.

(c) *General requirements*. Contracts under this part shall be entered into and carried out in accordance with the provisions of chapters 1 and 3 of title 41 of the Code of Federal Regulations and all other applicable laws and regulations.

(d) *Payments.* The Secretary shall from time to time make payments to the contractor of all or a portion of the contract award, either by way of reimbursement for expenses incurred or in advance for expenses to be incurred, to the extent he determines such payments are necessary to promote prompt initiation and advancement of the services to be provided under the contract. All payments not expended by the contractor within the period of the contract shall be returned to the Secretary.

(e) *Reports.* Contractors shall submit the following reports to the Secretary:

(1) Progress reports, to be submitted at the end of the first 30 days of the contract period and every 30 days therafter;

(2) A final report to be submitted within 60 days of the date upon which the contract terminates; and

(3) Such additional reports as the Secretary may prescribe including those which may be required to enable the Federal Coordinating Officer to carry out his functions.

§ 38.5 Grant assistance.

(a) *Eligibility.* Public agencies and private nonprofit mental health organizations which are determined by the Secretary to be capable of providing the professional mental health crisis counseling services or mental health training of disaster workers needed as a result of a major disaster are eligible for a grant award under this part.

(b) *Application.* The application shall contain:

(1) A proposed plan for the provision of the services for which grant assistance is requested;

(2) A proposed budget for the expenditure of the requested grant funds; and

(3) Such other pertinent information and assurances as the Secretary may require.

(c) *Grant awards.* (1) Preference will be given, to the extent feasible and practicable, to those public and private nonprofit agencies and organizations which are located or do business primarily in the area affected by the major disaster.

(2) Within the limits of the funds advanced by the Administrator, the amount of any grant award shall be determined on the basis of the Secretary's estimate of the sum necessary to carry out the grant purpose.

(3) Neither the approval of any application nor the award of any grant commits or obligates the United States in any way to make any additional, supplemental, continuation, or other award with respect to any approved application or portion of an approved application.

(d) *Other HHS regulations that apply.* Several other regulations apply to grants under this grant. These include, but are not limited to:

42 CFR part 50, subpart D—Public Health Service grant appeals procedure

45 CFR part 16—Procedures of the Departmental Grant Appeals Board

45 CFR part 74—Administration of grants

45 CFR part 75—Informal grant appeals procedures

45 CFR part 80—Nondiscrimination under programs receiving Federal assistance through the Department of Health and Human Services effectuation of Title VI of the Civil Rights Act of 1964

45 CFR part 81—Practice and procedure for hearings under part 80 of this title

45 CFR part 84—Nondiscrimination on the basis of handicap in programs and activities receiving or benefiting from Federal financial assistance

45 CFR part 86—Nondiscrimination on the basis of sex in education programs and activities receiving or benefiting from Federal financial assistance

45 CFR part 91—Nondiscrimination on the basis of age in HHS programs or activities receiving Federal financial assistance

(e) *Expenditure of grant funds.* Any funds granted pursuant to this part shall be expended solely for the purposes for which the funds were granted in accordance with the approved application and budget, the regulations of this part, the terms and the conditions of the award, and the applicable cost principles prescribed in subpart Q of 45 CFR part 74.

(f) *Reports.* In exceptional circumstances, a grantee may be required to submit special progress reports, in addition to those otherwise required, relating to the conduct and results of the approved grant.

[41 FR 52052, Nov. 26, 1976, as amended at 45 FR 57396, Aug. 28, 1980; 49 FR 38109, Sept. 27, 1984]

§ 38.6 Nondiscrimination.

Attention is called to the requirements of 24 CFR 2205.13 relating to nondiscrimination on the grounds of race. religion, sex, color, age, economic status, or national origin in the provision of disaster assistance.

§ 38.7 Nonliability.

Attention is called to section 308 of the Act (42 U.S.C. 5148) which provides that the Federal Government shall not be liable for any claim based upon the exercise or performance of or the failure to exercise or perform a discretionary function or duty on the part of a Federal agency or an employee of the Federal Government in carrying out the provisions of the Act.

§ 38.8 Criminal and civil penalties.

Attention is called to section 317 of the Act (42 U.S.C. 5157) which provides:

(a) Any individual who fraudulently or willfully misstates any fact in connection with a request for assistance under this Act shall be fined not more than $10,000 or imprisoned for not more than one year or both for each violation.

(b) Any individual who knowingly violates any order or regulation under this Act shall be subject to a civil penalty of not more than $5,000 for each violation.

(c) Whoever knowingly misapplies the proceeds of a loan or other cash benefit obtained under any section of this Act shall be subject to a fine in an amount equal to one and one half times the original principal amount of the loan or cash benefit.

§ 38.9 Federal audits.

The Secretary, the Administrator, and the Comptroller General of the United States, or their duly authorized representatives shall have access to any books, documents, papers, and records that pertain to Federal funds, equipment, and supplies received under this part for the purpose of audit and examination.

SUBCHAPTER D—GRANTS

PART 50—POLICIES OF GENERAL APPLICABILITY

Subpart A [Reserved]

Subpart B—Sterilization of Persons in Federally Assisted Family Planning Projects

Sec.
50.201 Applicability.
50.202 Definitions.
50.203 Sterilization of a mentally competent individual aged 21 or older.
50.204 Informed consent requirement.
50.205 Consent form requirements.
50.206 Sterilization of a mentally incompetent individual or of an institutionalized individual.
50.207 Sterilization by hysterectomy.
50.208 Program or project requirements.
50.209 Use of Federal financial assistance.
50.210 Review of regulation.

APPENDIX TO SUBPART B OF PART 50—REQUIRED CONSENT FORM

Subpart C—Abortions and Related Medical Services in Federally Assisted Programs of the Public Health Service

50.301 Applicability.
50.302 Definitions.
50.303 General rule.
50.304 Life of the mother would be endangered.
50.305 [Reserved]
50.306 Rape and incest.
50.307 Documentation needed by programs or projects.
50.308 Drugs and devices and termination of ectopic pregnancies.
50.309 Recordkeeping requirements.
50.310 Confidentiality.

Subpart D—Public Health Service Grant Appeals Procedure

50.401 What is the purpose of this subpart?
50.402 To what program do these regulations apply?
50.403 What is the policy basis for these procedures?
50.404 What disputes are covered by these procedures?
50.405 What is the structure of review committees?
50.406 What are the steps in the process?

Subpart E—Maximum Allowable Cost for Drugs

50.501 Applicability.
50.502 Definitions.
50.503 Policy.
50.504 Allowable cost of drugs.

Subpart F—Responsibility of Applicants for Promoting Objectivity in Research for Which PHS Funding Is Sought

50.601 Purpose.
50.602 Applicability.
50.603 Definitions.
50.604 Institutional responsibility regarding conflicting interests of investigators
50.605 Management of conflicting interests.
50.606 Remedies.
50.607 Other HHS regulations that apply.

AUTHORITY: Sec. 215, Public Health Service Act, 58 Stat. 690 (42 U.S.C. 216); Sec. 1006, Public Health Service Act, 84 Stat. 1507 (42 U.S.C. 300a–4), unless otherwise noted.

SOURCE: 43 FR 52165, Nov. 8, 1978, unless otherwise noted.

Subpart A [Reserved]

Subpart B—Sterilization of Persons in Federally Assisted Family Planning Projects

§ 50.201 Applicability.

The provisions of this subpart are applicable to programs or projects for health services which are supported in whole or in part by Federal financial assistance, whether by grant or contract, administered by the Public Health Service.

§ 50.202 Definitions.

As used in this subpart:

Arrange for means to make arrangements (other than mere referral of an individual to, or the mere making of an appointment for him or her with, another health care provider) for the performance of a medical procedure on an individual by a health care provider other than the program or project.

Hysterectomy means a medical procedure or operation for the purpose of removing the uterus.

Institutionalized individual means an individual who is (1) involuntarily confined or detained, under a civil or criminal statute, in a correctional or rehabilitative facility, including a mental hospital or other facility for

the care and treatment of mental illness, or (2) confined, under a voluntary commitment, in a mental hospital or other facility for the care and treatment of mental illness.

Mentally incompetent individual means an individual who has been declared mentally incompetent by a Federal, State, or local court of competent jurisdiction for any purpose unless he or she has been declared competent for purposes which include the ability to consent to sterilization.

Public Health Service means the Office of the Assistant Secretary for Health, Health Resources and Services Administration, National Institutes of Health, Centers for Disease Control, Alcohol, Drug Abuse and Mental Health Administration and all of their constituent agencies.

The *Secretary* means the Secretary of Health and Human Services and any other officer or employee of the Department of Health and Human Services to whom the authority involved has been delegated.

Sterilization means any medical procedure, treatment, or operation for the purpose of rendering an individual permanently incapable of reproducing.

[43 FR 52165, Nov. 8, 1978, as amended at 49 FR 38109, Sept. 27, 1984]

§ 50.203 Sterilization of a mentally competent individual aged 21 or older.

Programs or projects to which this subpart applies shall perform or arrange for the performance of sterilization of an individual only if the following requirements have been met:

(a) The individual is at least 21 years old at the time consent is obtained.

(b) The individual is not a mentally incompetent individual.

(c) The individual has voluntarily given his or her informed consent in accordance with the procedures of § 50.204 of this subpart.

(d) At least 30 days but not more than 180 days have passed between the date of informed consent and the date of the sterilization, except in the case of premature delivery or emergency abdominal surgery. An individual may consent to be sterilized at the time of premature delivery or emergency abdominal surgery, if at least 72 hours have passed after he or she gave informed consent to sterilization. In the case of premature delivery, the informed consent must have been given at least 30 days before the expected date of delivery.

§ 50.204 Informed consent requirement.

Informed consent does not exist unless a consent form is completed voluntarily and in accordance with all the requirements of this section and § 50.205 of this subpart.

(a) A person who obtains informed consent for a sterilization procedure must offer to answer any questions the individual to be sterilized may have concerning the procedure, provide a copy of the consent form, and provide orally all of the following information or advice to the individual who is to be sterilized:

(1) Advice that the individual is free to withhold or withdraw consent to the procedure any time before the sterilization without affecting his or her right to future care or treatment and without loss or withdrawal of any federally funded program benefits to which the individual might be otherwise entitled:

(2) A description of available alternative methods of family planning and birth control;

(3) Advice that the sterilization procedure is considered to be irreversible;

(4) A thorough explanation of the specific sterilization procedure to be performed;

(5) A full description of the discomforts and risks that may accompany or follow the performing of the procedure, including an explanation of the type and possible effects of any anesthetic to be used;

(6) A full description of the benefits or advantages that may be expected as a result of the sterilization; and

(7) Advice that the sterilization will not be performed for at least 30 days except under the circumstances specified in § 50.203(d) of this subpart.

(b) An interpreter must be provided to assist the individual to be sterilized if he or she does not understand the language used on the consent form or the language used by the person obtaining the consent.

(c) Suitable arrangements must be made to insure that the information specified in paragraph (a) of this section is effectively communicated to any individual to be sterilized who is blind, deaf or otherwise handicapped.

(d) A witness chosen by the individual to be sterilized may be present when consent is obtained.

(e) Informed consent may not be obtained while the individual to be sterilized is:

(1) In labor or childbirth;

(2) Seeking to obtain or obtaining an abortion; or

(3) Under the influence of alcohol or other substances that affect the individual's state of awareness.

(f) Any requirement of State and local law for obtaining consent, except one of spousal consent, must be followed.

§ 50.205 Consent form requirements.

(a) *Required consent form.* The consent form appended to this subpart or another consent form approved by the Secretary must be used.

(b) *Required signatures.* The consent form must be signed and dated by:

(1) The individual to be sterilized; and

(2) The interpreter, if one is provided; and

(3) The person who obtains the consent; and

(4) The physician who will perform the sterilization procedure.

(c) *Required certifications.* (1) The person obtaining the consent must certify by signing the consent form that:

(i) Before the individual to be sterilized signed the consent form, he or she advised the individual to be sterilized that no Federal benefits may be withdrawn because of the decision not to be sterilized,

(ii) He or she explained orally the requirements for informed consent as set forth on the consent form, and

(iii) To the best of his or her knowledge and belief, the individual to be sterilized appeared mentally competent and knowingly and voluntarily consented to be sterilized.

(2) The physician performing the sterilization must certify by signing the consent form, that:

(i) Shortly before the performance of the sterilization, he or she advised the individual to be sterilized that no Federal benefits may be withdrawn because of the decision not to be sterilized,

(ii) He or she explained orally the requirements for informed consent as set forth on the consent form, and

(iii) To the best of his or her knowledge and belief, the individual to be sterilized appeared mentally competent and knowingly and voluntarily consented to be sterilized. Except in the case of premature delivery or emergency abdominal surgery, the physician must further certify that at least 30 days have passed between the date of the individual's signature on the consent form and the date upon which the sterilization was performed. If premature delivery occurs or emergency abdominal surgery is required within the 30–day period, the physician must certify that the sterilization was performed less than 30 days but not less than 72 hours after the date of the individual's signature on the consent form because of premature delivery or emergency abdominal surgery, as applicable. In the case of premature delivery, the physician must also state the expected date of delivery. In the case of emergency abdominal surgery, the physician must describe the emergency.

(3) If an interpreter is provided, the interpreter must certify that he or she translated the information and advice presented orally, read the consent form and explained its contents and to the best of the interpreter's knowledge and belief, the individual to be sterilized understood what the interpreter told him or her.

§ 50.206 Sterilization of a mentally incompetent individual or of an institutionalized individual.

Programs or projects to which this subpart applies shall not perform or arrange for the performance of a sterilization of any mentally incompetent individual or institutionalized individual.

§ 50.207 Sterilization by hysterectomy.

(a) Programs or projects to which this subpart applies shall not perform or arrange for the performance of any

hysterectomy solely for the purpose of rendering an individual permanently incapable of reproducing or where, if there is more than one purpose to the procedure, the hysterectomy would not be performed but for the purpose of rendering the individual permanently incapable of reproducing.

(b) Except as provided in paragraph (c) of this section, programs or projects to which this subpart applies may perform or arrange for the performance of a hysterectomy not covered by paragraph (a) of this section only if:

(1) The person who secures the authorization to perform the hysterectomy has informed the individual and her representative, if any, orally and in writing, that the hysterectomy will make her permanently incapable of reproducing; and

(2) The individual or her representative, if any, has signed a written acknowledgment of receipt of that information.

(c)(1) A program or project is not required to follow the procedures of paragraph (b) of this section if either of the following circumstances exists:

(i) The individual is already sterile at the time of the hysterectomy.

(ii) The individual requires a hysterectomy because of a life-threatening emergency in which the physician determines that prior acknowledgment is not possible.

(2) If the procedures of paragraph (b) of this section are not followed because one or more of the circumstances of paragraph (c)(1) exist, the physician who performs the hysterectomy must certify in writing:

(i) That the woman was already sterile, stating the cause of that sterility; or

(ii) That the hysterectomy was performed under a life-threatening emergency situation in which he or she determined prior acknowledgment was not possible. He or she must also include a description of the nature of the emergency.

[43 FR 52165, Nov. 8, 1978, as amended at 47 FR 33701, Aug. 4, 1982]

§ 50.208 Program or project requirements.

(a) A program or project must, with respect to any sterilization procedure or hysterectomy it performs or arranges, meet all requirements of this subpart.

(b) The program or project shall maintain sufficient records and documentation to assure compliance with these regulations, and must retain such data for at least 3 years.

(c) The program or project shall submit other reports as required and when requested by the Secretary.

§ 50.209 Use of Federal financial assistance.

(a) Federal financial assistance adminstered by the Public Health Service may not be used for expenditures for sterilization procedures unless the consent form appended to this section or another form approved by the Secretary is used.

(b) A program or project shall not use Federal financial assistance for any sterilization or hysterectomy without first receiving documentation showing that the requirements of this subpart have been met. Documentation includes consent forms, and as applicable, either acknowledgments of receipt of hysterectomy information or certification of an exception for hysterectomies.

[43 FR 52165, Nov. 8, 1978, as amended at 47 FR 33701, Aug. 4, 1982]

§ 50.210 Review of regulation.

The Secretary will request public comment on the operation of the provisions of this subpart not later than 3 years after their effective date.

APPENDIX TO SUBPART B OF PART 50—REQUIRED CONSENT FORM

NOTICE: YOUR DECISION AT ANY TIME NOT TO BE STERILIZED WILL NOT RESULT IN THE WITHDRAWAL OR WITHHOLDING OF ANY BENEFITS PROVIDED BY PROGRAMS OR PROJECTS RECEIVING FEDERAL FUNDS.

CONSENT TO STERILIZATION

I have asked for and received information about sterilization from _____ (doctor or clinic). When I first asked for the information, I was told that the decision to be sterilized is completely up to me. I was told that I could decide not to be sterilized. If I decide not to be sterilized, my decision will not affect my right to future care or treatment. I will not lose any help or benefits

from programs receiving Federal funds, such as A.F.D.C. or medicaid that I am now getting or for which I may become eligible.

I UNDERSTAND THAT THE STERILIZATION MUST BE CONSIDERED PERMANENT AND NOT REVERSIBLE. I HAVE DECIDED THAT I DO NOT WANT TO BECOME PREGNANT, BEAR CHILDREN OR FATHER CHILDREN.

I was told about those temporary methods of birth control that are available and could be provided to me which will allow me to bear or father a child in the future. I have rejected these alternatives and chosen to be sterilized.

I understand that I will be sterilized by an operation known as a _____. The discomforts, risks and benefits associated with the operation have been explained to me. All my questions have been answered to my satisfaction.

I understand that the operation will not be done until at least 30 days after I sign this form. I understand that I can change my mind at any time and that my decision at any time not to be sterilized will not result in the withholding of any benefits or medical services provided by federally funded programs.

I am at least 21 years of age and was born on ____ (day), ____ (month), ____ (year).

I, _____, hereby consent of my own free will to be sterilized by _____ by a method called _____. My consent expires 180 days from the date of my signature below.

I also consent to the release of this form and other medical records about the operation to:

Representatives of the Department of Health and Human Services or

Employees of programs or projects funded by that Department but only for determining if Federal laws were observed.

I have received a copy of this form.

Signature _____

Date: _____

(Month, day, year)

You are requested to supply the following information, but it is not required:

Ethnicity and Race Designation

Ethnicity:

☐ Hispanic or Latino

☐ Not Hispanic or Latino

Race (mark one or more):

☐ American Indian or Alaska Native

☐ Asian

☐ Black or African American

☐ Native Hawaiian or Other Pacific Islander

☐ White

INTERPRETER'S STATEMENT

If an interpreter is provided to assist the individual to be sterilized:

I have translated the information and advice presented orally to the individual to be sterilized by the person obtaining this consent. I have also read him/her the consent form in _____ language and explained its contents to him/her. To the best of my knowledge and belief he/she understood this explanation.

Interpreter _____

Date _____

STATE OF PERSON OBTAINING CONSENT

Before _____ (name of individual), signed the consent form, I explained to him/her the nature of the sterilization operation _____, the fact that it is intended to be a final and irreversible procedure and the discomforts, risks and benefits associated with it.

I counseled the individual to be sterilized that alternative methods of birth control are available which are temporary. I explained that sterilization is different because it is permanent.

I informed the individual to be sterilized that his/her consent can be withdrawn at any time and that he/she will not lose any health services or any benefits provided by Federal funds.

To the best of my knowledge and belief the individual to be sterilized is at least 21 years old and appears mentally competent. He/She knowingly and voluntarily requested to be sterilized and appears to understand the nature and consequence of the procedure.

Signature of person obtaining consent _____

Date _____

Facility _____

Address _____

PHYSICIAN'S STATEMENT

Shortly before I performed a sterilization operation upon _____ (name of individual to be sterilized), on _____ (date of sterilization), _____ (operation), I explained to him/her the nature of the sterilization operation _____ (specify type of operation), the fact that it is intended to be a final and irreversible procedure and the discomforts, risks and benefits associated with it.

I counseled the individual to be sterilized that alternative methods of birth control are available which are temporary. I explained that sterilization is different because it is permanent.

I informed the individual to be sterilized that his/her consent can be withdrawn at any time and that he/she will not lose any health services or benefits provided by Federal funds.

To the best of my knowledge and belief the individual to be sterilized is at least 21 years old and appears mentally competent. He/She knowingly and voluntarily requested to be sterilized and appeared to understand the nature and consequences of the procedure.

(*Instructions for use of alternative final paragraphs:* Use the first paragraph below except in the case of premature delivery or emergency abdominal surgery where the sterilization is performed less than 30 days after the date of the individual's signature on the consent form. In those cases, the second paragraph below must be used. Cross out the paragraph which is not used.)

(1) At least 30 days have passed between the date of the individual's signature on this consent form and the date the sterilization was performed.

(2) This sterilization was performed less than 30 days but more than 72 hours after the date of the individual's signature on this consent form because of the following circumstances (check applicable box and fill in information requested):

☐ Premature delivery
Individual's expected date of delivery: _____
☐ Emergency abdominal surgery:
(Describe circumstances): _____

Physician _____
Date _____

Paperwork Reduction Act Statement

A Federal agency may not conduct or sponsor, and a person is not required to respond to, a collection of information unless it displays the currently valid OMB control number. Public reporting burden for this collection of information will vary; however, we estimate an average of one hour per response, including for reviewing instructions, gathering and maintaining the necessary data, and disclosing the information. Send any comment regarding the burden estimate or any other aspect of this collection of information to the OS Reports Clearance Officer, ASBTF/Budget Room 503 HHH Building, 200 Independence Avenue, SW., Washington, DC 20201.

Respondents should be informed that the collection of information requested on this form is authorized by 42 CFR part 50, subpart B, relating to the sterilization of persons in federally assisted public health programs. The purpose of requesting this information is to ensure that individuals requesting sterilization receive information regarding the risks, benefits and consequences, and to assure the voluntary and informed consent of all persons undergoing sterilization procedures in federally assisted public health programs. Although not required, respondents are requested to supply information on their race and ethnicity. Failure to provide the other information requested on this consent form, and to sign this consent form, may result in an inability to receive sterilization procedures funded through federally assisted public health programs.

All information as to personal facts and circumstances obtained through this form will be held confidential, and not disclosed without the individual's consent, pursuant to any applicable confidentiality regulations.

[43 FR 52165, Nov. 8, 1978, as amended at 58 FR 33343, June 17, 1993; 68 FR 12308, Mar. 14, 2003]

Subpart C—Abortions and Related Medical Services in Federally Assisted Programs of the Public Health Service

AUTHORITY: Sec. 118, Pub. L. 96–86, Oct. 12, 1979, unless otherwise noted.

SOURCE: 43 FR 4570, Feb. 2, 1978, unless otherwise noted.

§ 50.301 Applicability.

The provisions of this subpart are applicable to programs or projects for health services which are supported in whole or in part by Federal financial assistance, whether by grant or contract, appropriated to the Department of Health and Human Services and administered by the Public Health Service.

§ 50.302 Definitions.

As used in this subpart: (a) *Law enforcement agency* means an agency, or any part thereof, charged under applicable law with enforcement of the general penal statutes of the United States, or of any State or local jurisdiction.

(b) *Medical procedures performed upon a victim of rape or incest* means any medical service, including an abortion, performed for the purpose of preventing or terminating a pregnancy arising out of an incident of rape or incest.

(c) *Physician* means a doctor of medicine or osteopathy legally authorized to practice medicine and surgery by the State in which he or she practices.

(d) *Public health service* means: (1) An agency of the United States or of a State or local government, that provides health or medical services; and

(2) A *rural health clinic,* as defined under section 1(d)(aa)(2) of Pub. L. 95–

210, 91 Stat. 1485; except that any agency or facility whose principal function is the performance of abortions is specifically excluded from this definition.

§ 50.303 General rule.

Federal financial participation is not available for the performance of an abortion in programs or projects to which this subpart applies except under circumstances described in § 50.304 or § 50.306.

[43 FR 4570, Feb. 2, 1978, as amended at 44 FR 61598, Oct. 26, 1979]

§ 50.304 Life of the mother would be endangered.

Federal financial participation is available in expenditures for an abortion when a physician has found, and so certified in writing to the program or project, that on the basis of his/her professional judgment, the life of the mother would be endangered if the fetus were carried to term. The certification must contain the name and address of the patient.

(Sec. 101, Pub. L. 95–205, 91 Stat. 1461, Dec. 9, 1977)

[43 FR 13868, July 21, 1978]

§ 50.305 [Reserved]

§ 50.306 Rape and incest.

Federal financial participation is available in expenditures for medical procedures performed upon a victim of rape or incest if the program or project has received signed documentation from a law enforcement agency or public health service stating:

(a) That the person upon whom the medical procedure was performed was reported to have been the victim of an incident of rape or incest;

(b) The date on which the incident occurred;

(c) The date on which the report was made, which must have been within 60 days of the date on which the incident occurred;

(d) The name and address of the victim and the name and address of the person making the report (if different from the victim); and

(e) That the report included the signature of the person who reported the incident.

Federal financial participation is also available in expenditures for abortions for victims of rape or incest under the circumstances described in § 50.304 without regard to the requirements of the preceding sentence.

(Sec. 101, Pub. L. 95–205, 91 Stat. 1461, Dec. 9, 1977)

[43 FR 13868, July 21, 1978, as amended at 44 FR 61598, Oct. 26, 1979]

§ 50.307 Documentation needed by programs or projects.

Federal financial participation is unavailable for the performance of abortions or other medical procedures otherwise provided for under §§ 50.304 and 50.306 if the program or project has paid without first having received the certifications and documentation specified in those sections.

[43 FR 4570, Feb. 2, 1978, as amended at 44 FR 61598, Oct. 26, 1979]

§ 50.308 Drugs and devices and termination of ectopic pregnancies.

Federal financial participation is available with respect to the cost of drugs or devices to prevent implantation of the fertilized ovum, and for medical procedures necessary for the termination of an ectopic pregnancy.

§ 50.309 Recordkeeping requirements.

Programs or projects to which this subpart applies must maintain copies of the certifications and documentation specified in §§ 50.304 and 50.306 for three years pursuant to the retention and custodial requirements for records at 45 CFR 74.20 *et seq*.

[43 FR 4570, Feb. 2, 1978, as amended at 44 FR 61598, Oct. 26, 1979]

§ 50.310 Confidentiality.

Information in the records or in the possession of programs or projects which is acquired in connection with the requirements of this subpart may not be disclosed in a form which permits the identification of an individual without the individual's consent except as may be necessary for the health of the individual or as may be necessary for the Secretary to monitor the activities of those programs or projects. In any event, any disclosure shall be subject to appropriate safeguards

which will minimize the likelihood of disclosures of personal information in identifiable form.

Subpart D—Public Health Service Grant Appeals Procedure

AUTHORITY: Sec. 215, Public Health Service Act, 58 Stat. 690 (42 U.S.C. 216); 45 CFR 16.3(c).

SOURCE: 54 FR 34770, Aug. 22, 1989, unless otherwise noted.

§ 50.401 What is the purpose of this subpart?

This subpart establishes an informal procedure for the resolution of certain postaward grant and cooperative agreement disputes within the agencies and offices identified in § 50.402.

[63 FR 66062, Dec. 1, 1998]

§ 50.402 To what program do these regulations apply?

This subpart applies to all grant and cooperative agreement programs, except block grants, which are administered by the National Institutes of Health; The Centers for Disease Control and Prevention; the Agency for Toxic Substances and Disease Registry; the Food and Drug Administration; and the Office of Public Health and Science. For purposes of this subpart, these entities are hereinafter referred to as ''agencies.''

[70 FR 76175, Dec. 23, 2005]

§ 50.403 What is the policy basis for these procedures?

The Secretary of Health and Human Services has established a Departmental Appeals Board for the purpose of providing a fair and flexible process for the appeal of written final decisions involving certain grant and cooperative agreement programs administered by constituent agencies of the Department. The regulatory provision which establishes the circumstances under which the Board will accept an appeal (45 CFR 16.3) provides, among other things, that the appellant must have exhausted any preliminary appeal process required by regulation before a formal appeal to the Departmental Board will be allowed. This subpart provides such an informal preliminary procedure for resolution of disputes in order to preclude submission of cases to the Departmental Appeals Board before an agency identified in § 50.402 has had an opportunity to review decisions of its officials and to settle disputes with grantees.

[54 FR 34770, Aug. 22, 1989, as amended at 63 FR 66062, Dec. 1, 1998]

§ 50.404 What disputes are covered by these procedures?

(a) These procedures are applicable to the following adverse determinations under discretionary project grants and cooperative agreements (both referred to in this subpart as grants) issued by the agencies identified at § 50.402;

(1) Termination, in whole or in part, of a grant for failure of the grantee to carry out its approved project in accordance with the applicable law and the terms and conditions of such assistance or for failure of the grantee otherwise to comply with any law, regulation, assurance, term, or condition applicable to the grant.

(2) A determination that an expenditure not allowable under the grant has been charged to the grant or that the grantee has otherwise failed to discharge its obligation to account for grant funds.

(3) A determination that a grant is void.

(4) A denial of a noncompeting continuation award under the project period system of funding where the denial is for failure to comply with the terms of a previous award.

(b) A determination subject to this subpart may not be reviewed by the review committee described in § 50.405 unless an officer or employee of the agency has notified the grantee in writing of the adverse determination. The notification must set forth the reasons for the determination in sufficient detail to enable the grantee to respond and must inform the grantee of the opportunity for review under this subpart.

[54 FR 34770, Aug. 22, 1989, as amended at 63 FR 66062, Dec. 1, 1998]

§ 50.405 What is the structure of review committees?

The head of the agency, or his or her designee, shall appoint review committees to review adverse determinations made by officials for programs under their jurisdiction. A minimum of three employees shall be appointed (one of whom shall be designated as chairperson) either on an ad hoc, case-by-case basis, or as regular members of review committees for such terms as may be designated. None of the members of the review committee reviewing any given appeal may be from the office of the responsible official whose adverse determination is being appealed (e.g., project officer, grants specialist, program manager, grants management officer).

[54 FR 34770, Aug. 22, 1989, as amended at 63 FR 66062, Dec. 1, 1998]

§ 50.406 What are the steps in the process?

(a) A grantee with respect to whom an adverse determination described in § 50.404(a) above has been made and who desires a review of that determination must submit a request for such review to the head of the appropriate agency or his or her designee no later than 30 days after the written notification of the determination is received, except that if the grantee shows good cause why an extension of time should be granted, the head of the appropriate agency or his or her designee may grant an extension of time.

(b) The request for review must include a copy of the adverse determination, must identify the issue(s) in dispute, and must contain a full statement of the grantee's position with respect to such issue(s) and the pertinent facts and reasons in support of the grantee's position. In addition to the required written statement, the grantee shall provide copies of any documents supporting its claim.

(c) When a request for review has been filed under this subpart with respect to an adverse determination, no action may be taken by the awarding agency pursuant to such determination until the request has been disposed of, except that the filing of the request shall not affect any authority which the agency may have to suspend assistance or otherwise to withhold or defer payments under the grant during proceedings under this subpart. This paragraph does not require the awarding agency to provide continuation funding during the appeal process to a grantee whose noncompeting continuation award has been denied.

(d) Upon receipt of a request for review, the head of the agency or his or her designee will make a decision as to whether the dispute is reviewable under this subpart and will promptly notify the grantee and the office responsible for the adverse determination of this decision. If the head of the agency or his or her designee determines that the dispute is reviewable, he or she will forward the matter to the review committee appointed under § 50.405.

(e) The agency involved will provide the review committee appointed under § 50.405 with copies of all relevant background materials (including applications(s), award(s), summary statement(s), and correspondence) and any additional pertinent information available. These materials must be tabbed and organized chronologically and accompanied by an indexed list identifying each document.

(f) The grantee shall be given an opportunity to provide the review committee with additional statements and documentation not provided in the request for review described in paragraph (b) of this section. This additional submission, which must be organized and indexed as indicated under paragraph (e) of this section, should provide only material that is relevant to the review committee's deliberation of the issues in the case.

(g) The review committee may, at its discretion, invite the grantee and/or the agency staff to discuss the pertinent issues with the committee and to submit such additional information as the committee deems appropriate.

(h) Based on its review, the review committee will prepare a written decision to be signed by the chairperson and each of the other committee members. The review committee shall send the written decision with a transmittal letter to the grantee and shall send a copy of both to the official responsible for the adverse determination. If the

decision is adverse to the grantee's position, the transmittal letter must state the grantee's right to appeal to the Departmental Appeals Board under 45 CFR part 16.

[54 FR 34770, Aug. 22, 1989, as amended at 63 FR 66063, Dec. 1, 1998]

Subpart E—Maximum Allowable Cost for Drugs

AUTHORITY: Sec. 215, Public Health Service Act, 58 Stat. 690 (42 U.S.C. 216).

SOURCE: 40 FR 34514, Aug. 15, 1975, unless otherwise noted.

§ 50.501 Applicability.

This subpart is applicable to programs or projects for health services which are supported in whole or in part by Federal financial assistance, whether by grant or contract, administered by the Public Health Service. It applies to Federal funds and to non-Federal funds which are required to be expended as a condition to receiving Federal funds under such programs or projects.

§ 50.502 Definitions.

As used in this subpart:

(a) *Public Health Service* means the Office of the Assistant Secretary for Health, Health Resources and Services Administration, National Institutes of Health, Centers for Disease Control, Alcohol, Drug Abuse and Mental Health Administration, Food and Drug Administration, and all of their constituent agencies.

(b) *Secretary* means the Secretary of Health and Human Services and any other officer or employee of the Department of Health and Human Services to whom the authority involved has been delegated.

(c) *Program funds* means (1) Federal funds provided through grant or contract to support a program or project covered by § 50.501, and (2) any non-Federal funds that are required as a condition of such grant or contract to be expended to carry out such program or project.

(d) *Provider* means one who furnishes medical or pharmaceutical services or supplies for which program funds may be expended under any of the programs or projects described in § 50.501.

(e) *Acquisition cost* means the price generally and currently paid by providers for a drug marketed or sold by a particular formulator or labeler in the package size of drug most frequently purchased by providers, as determined by the Secretary on the basis of drug price information furnished by the Department.

[40 FR 34514, Aug. 15, 1975, as amended at 49 FR 38109, Sept. 27, 1984]

§ 50.503 Policy.

It is the policy of the Secretary that program funds which are utilized for the acquisition of drugs be expended in the most economical manner feasible. In furtherance of this policy, the Secretary has established, in 45 CFR part 19, a procedure for determining the Maximum Allowable Cost for drugs which are purchased with program funds.

§ 50.504 Allowable cost of drugs.

(a) The maximum amount which may be expended from program funds for the acquisition of any drug shall be the lowest of

(1) The maximum allowable cost (MAC) of the drug, if any, established in accordance with 45 CFR part 19, plus a dispensing fee determined by the Secretary in accordance with paragraph (b) of this section, to be reasonable;

(2) The acquisition cost of the drug plus a dispensing fee determined by the Secretary, in accordance with paragraph (b) of this section, to be reasonable; or

(3) The provider's usual and customary charge to the public for the drug; *Provided*, That the MAC established for any drug shall not apply to a brand of that drug prescribed for a patient which the prescriber has certified, in accordance with paragraph (c) of this section, is medically necessary for that patient; *And Provided further*, That where compensation for drug dispensing is included in other costs allowable under the applicable program statute and regulations, the terms and conditions of the grant or contract, and the applicable cost principles prescribed in 45 CFR part 74, no separate dispensing fee will be recognized.

(b) In determining whether a dispensing fee is reasonable, the Secretary will take into account:

(1) Cost components such as overhead, professional services, and profits,

(2) Payment practices of third-party payment organizations, including other Federal programs such as titles XVIII and XIX of the Social Security Act; and

(3) Any surveys by States, universities or others of costs of pharmacy operations and the fees charged in the particular area.

(c) A certification by a prescriber, pursuant to paragraph (a) of this section, that a brand of drug is medically necessary for a particular patient shall be in the prescriber's own handwriting, in such form and manner as the Secretary may prescribe. An example of an acceptable certification is the notation ''brand necessary''. A procedure for checking a box on a form will not constitute an acceptable certification.

Subpart F—Responsibility of Applicants for Promoting Objectivity in Research for Which PHS Funding Is Sought

AUTHORITY: 42 U.S.C. 216, 289b–1, 299c–3.

SOURCE: 60 FR 35815, July 11, 1995; 60 FR 39076, July 31, 1995, unless otherwise noted.

§ 50.601 Purpose.

This subpart promotes objectivity in research by establishing standards to ensure there is no reasonable expectation that the design, conduct, or reporting of research funded under PHS grants or cooperative agreements will be biased by any conflicting financial interest of an Investigator.

§ 50.602 Applicability.

This subpart is applicable to each Institution that applies for PHS grants or cooperative agreements for research and, through the implementation of this subpart by each Institution, to each Investigator participating in such research (see § 50.604(a)); provided, that this subpart does not apply to SBIR Program Phase I applications. In those few cases where an individual, rather than an institution, is an applicant for PHS grants or cooperative agreements for research, PHS Awarding Components will make case-by-case determinations on the steps to be taken to ensure that the design, conduct, and reporting of the research will not be biased by any conflicting financial interest of the individual.

§ 50.603 Definitions.

As used in this subpart:

HHS means the United States Department of Health and Human Services, and any components of the Department to which the authority involved may be delegated.

Institution means any domestic or foreign, public or private, entity or organization (excluding a Federal agency).

Investigator means the principal investigator and any other person who is responsible for the design, conduct, or reporting of research funded by PHS, or proposed for such funding. For purposes of the requirements of this subpart relating to financial interests, ''Investigator'' includes the Investigator's spouse and dependent children.

PHS means the Public Health Service, an operating division of the U.S. Department of Health and Human Services, and any components of the PHS to which the authority involved may be delegated.

PHS Awarding Component means the organizational unit of the PHS that funds the research that is subject to this subpart.

Public Health Service Act or *PHS Act* means the statute codified at 42 U.S.C. 201 *et seq*.

Research means a systematic investigation designed to develop or contribute to generalizable knowledge relating broadly to public health, including behavioral and social-sciences research. The term encompasses basic and applied research and product development. As used in this subpart, the term includes any such activity for which research funding is available from a PHS Awarding Component through a grant or cooperative agreement, whether authorized under the PHS Act or other statutory authority.

Significant Financial Interest means anything of monetary value, including but not limited to, salary or other payments for services (e.g., consulting fees

or honoraria); equity interests (e.g., stocks, stock options or other ownership interests); and intellectual property rights (e.g., patents, copyrights and royalties from such rights). The term does not include:

(1) Salary, royalties, or other remuneration from the applicant institution;

(2) Any ownership interests in the institution, if the institution is an applicant under the SBIR Program;

(3) Income from seminars, lectures, or teaching engagements sponsored by public or nonprofit entities;

(4) Income from service on advisory committees or review panels for public or nonprofit entities;

(5) An equity interest that when aggregated for the Investigator and the Investigator's spouse and dependent children, meets both of the following tests: Does not exceed $10,000 in value as determined through reference to public prices or other reasonable measures of fair market value, and does not represent more than a five percent ownership interest in any single entity; or

(6) Salary, royalties or other payments that when aggregated for the Investigator and the Investigator's spouse and dependent children over the next twelve months, are not expected to exceed $10,000.

Small Business Innovation Research (SBIR) Program means the extramural research program for small business that is established by the Awarding Components of the Public Health Service and certain other Federal agencies under Pub. L. 97–219, the Small Business Innovation Development Act, as amended. For purposes of this subpart, the term SBIR Program includes the Small Business Technology Transfer (STTR) Program, which was established by Pub. L. 102–564.

§ 50.604 Institutional responsibility regarding conflicting interests of investigators.

Each Institution must:

(a) Maintain an appropriate written, enforced policy on conflict of interest that complies with this subpart and inform each Investigator of that policy, the Investigator's reporting responsibilities, and of these regulations. If the Institution carries out the PHS-funded research through subgrantees, contractors, or collaborators, the Institution must take reasonable steps to ensure that Investigators working for such entities comply with this subpart, either by requiring those Investigators to comply with the Institution's policy or by requiring the entities to provide assurances to the Institution that will enable the Institution to comply with this subpart.

(b) Designate an institutional official(s) to solicit and review financial disclosure statements from each Investigator who is planning to participate in PHS-funded research.

(c)(1) Require that by the time an application is submitted to PHS each Investigator who is planning to participate in the PHS-funded research has submitted to the designated official(s) a listing of his/her known Significant Financial Interests (and those of his/her spouse and dependent children):

(i) That would reasonably appear to be affected by the research for which PHS funding is sought; and

(ii) In entities whose financial interests would reasonably appear to be affected by the research.

(2) All financial disclosures must be updated during the period of the award, either on an annual basis or as new reportable Significant Financial Interests are obtained.

(d) Provide guidelines consistent with this subpart for the designated official(s) to identify conflicting interests and take such actions as necessary to ensure that such conflicting interests will be managed, reduced, or eliminated.

(e) Maintain records of all financial disclosures and all actions taken by the Institution with respect to each conflicting interest for at least three years from the date of submission of the final expenditures report or, where applicable, from other dates specified in 45 CFR 74.53(b) for different situations.

(f) Establish adequate enforcement mechanisms and provide for sanctions where appropriate.

(g) Certify, in each application for the funding to which this subpart applies, that:

(1) There is an effect at that Institution a written and enforced administrative process to identify and manage, reduce or eliminate conflicting interests with respect to all research projects for which funding is sought from the PHS,

(2) Prior to the Institution's expenditure of any funds under the award, the Institution will report to the PHS Awarding Component the existence of a conflicting interest (but not the nature of the interest or other details) found by the institution and assure that the interest has been managed, reduced or eliminated in accordance with this subpart; and, for any interest that the Institution identifies as conflicting subsequent to the Institution's initial report under the award, the report will be made and the conflicting interest managed, reduced, or eliminated, at least on an interim basis, within sixty days of that identification;

(3) The Institution agrees to make information available, upon request, to the HHS regarding all conflicting interests identified by the Institution and how those interests have been managed, reduced, or eliminated to protect the research from bias; and

(4) The Institution will otherwise comply with this subpart.

§ 50.605 Management of conflicting interests.

(a) The designated official(s) must: Review all financial disclosures; and determine whether a conflict of interest exists and, if so, determine what actions should be taken by the institution to manage, reduce or eliminate such conflict of interest. A conflict of interest exists when the designated official(s) reasonably determines that a Significant Financial Interest could directly and significantly affect the design, conduct, or reporting of the PHS-funded research. Examples of conditions or restrictions that might be imposed to manage conflicts of interest include, but are not limited to:

(1) Public disclosure of significant financial interests;

(2) Monitoring of research by independent reviewers;

(3) Modification of the research plan;

(4) Disqualification from participation in all or a portion of the research funded by the PHS;

(5) Divestiture of significant financial interests; or

(6) Severance of relationships that create actual or potential conflicts.

(b) In addition to the types of conflicting financial interests described in this paragraph that must be managed, reduced, or eliminated, an Institution may require the management of other conflicting financial interests, as the Institution deems appropriate.

§ 50.606 Remedies.

(a) If the failure of an Investigator to comply with the conflict of interest policy of the Institution has biased the design, conduct, or reporting of the PHS-funded research, the Institution must promptly notify the PHS Awarding Component of the corrective action taken or to be taken. The PHS Awarding Component will consider the situation and, as necessary, take appropriate action, or refer the matter to the Institution for further action, which may include directions to the Institution on how to maintain appropriate objectivity in the funded project.

(b) The HHS may at any time inquire into the Institutional procedures and actions regarding conflicting financial interests in PHS-funded research, including a requirement for submission of, or review on site, all records pertinent to compliance with this subpart. To the extent permitted by law, HHS will maintain the confidentiality of all records of financial interests. On the basis of its review of records and/or other information that may be available, the PHS Awarding Component may decide that a particular conflict of interest will bias the objectivity of the PHS-funded research to such an extent that further corrective action is needed or that the Institution has not managed, reduced, or eliminated the conflict of interest in accordance with this subpart. The PHS Awarding Component may determine that suspension of funding under 45 CFR 74.62 is necessary until the matter is resolved.

(c) In any case in which the HHS determines that a PHS-funded project of clinical research whose purpose is to evaluate the safety or effectiveness of a drug, medical device, or treatment

has been designed, conducted, or reported by an Investigator with a conflicting interest that was not disclosed or managed as required by this subpart, the Institution must require the Investigator(s) involved to disclose the conflicting interest in each public presentation of the results of the research.

§50.607 Other HHS regulations that apply.

Several other regulations and policies apply to this subpart.

They include, but are not necessarily limited to:

42 CFR part 50, subpart D—Public Health Service grant appeals procedure
45 CFR part 16—Procedures of the Departmental Grant Appeals Board
45 CFR part 74—Uniform Administrative Requirements for Awards and Subawards to Institutions of Higher Education, Hospitals, Other Non-Profit Organizations, and Commercial Organizations; and Certain Grants and Agreements with States, Local Governments and Indian Tribal Governments
45 CFR part 76—Government-wide debarment and suspension (non-procurement)
45 CFR part 79—Program Fraud Civil Remedies
45 CFR part 92—Uniform Administrative Requirements for Grants and Cooperative Agreements to State and Local Governments

PART 51—REQUIREMENTS APPLICABLE TO THE PROTECTION AND ADVOCACY FOR INDIVIDUALS WITH MENTAL ILLNESS PROGRAM

Sec.
51.1 Scope.
51.2 Defintitions.

Subpart A—Basic Requirements

51.3 Formula for determining allotments.
51.4 Grants administration requirements.
51.5 Eligibility for allotment.
51.6 Use of allotments.
51.7 Eligibility for protection and advocacy services.
51.8 Annual reports.
51.9 [Reserved]
51.10 Remedial actions.
51.11–51.20 [Reserved]

Subpart B—Program Administration and Priorities

51.21 Contracts for program operations.
51.22 Governing authority.
51.23 Advisory council.
51.24 Program priorities.
51.25 Grievance procedure.
51.26 Conflicts of interest.
51.27 Training.
51.28–51.30 [Reserved]

Subpart C—Protection and Advocacy Services

51.31 Conduct of protection and advocacy activities.
51.32 Resolving disputes.
51.33–51.40 [Reserved]

Subpart D—Access to Records, Facilities and Individuals

51.41 Access to records.
51.42 Access to facilities and residents.
51.43 Denial of delay or access.
51.44 [Reserved]
51.45 Confidentiality of protection and advocacy system records.
51.46 Disclosing information obtained from a provider of mental health services.

AUTHORITY: 42 U.S.C. 10801, *et seq.*

SOURCE: 62 FR 53564, Oct. 15, 1997, unless otherwise noted.

§51.1 Scope.

The provisions of this part apply to recipients of Federal assistance under the Protection and Advocacy for Mentally Ill Individuals Act of 1986, as amended.

§51.2 Definitions.

In addition to the definitions in section 102 of the Act, as amended, the following definitions apply:

Abuse means any act or failure to act by an employee of a facility rendering care or treatment which was performed, or which was failed to be performed, knowingly, recklessly, or intentionally, and which caused, or may have caused, injury or death to an individual with mental illness, and includes but is not limited to acts such as: rape or sexual assault; striking; the use of excessive force when placing an individual with mental illness in bodily restrains; the use of bodily or chemical restraints which is not in compliance with Federal and State laws and regulations; verbal, nonverbal, mental and emotional harassment; and any other practice which is likely to cause immediate physical or psychological harm or

result in long-term harm if such practices continue.

Act means the Protection and Advocacy for Mentally Ill Individuals Act of 1986, as amended, also referred to as Protection and Advocacy for Individuals with Mental Illness Act.

ADD means the Administration on Developmental Disabilities within the Administration for Children and Families, Department of Health and Human Services.

Care or Treatment means services provided to prevent, identify, reduce or stabilize mental illness or emotional impairment such as mental health screening, evaluation, counseling, biomedical, behavioral and psychotherapies, supportive or other adjunctive therapies, medication supervision, special education and rehabilitation, even if only ''as needed'' or under a contractual arrangement.

Center or *CMHS* means the Center for Mental Health Services, a component of the Substance Abuse and Mental Health Services Administration.

Complaint includes, but is not limited to any report or communication, whether formal or informal, written or oral, received by the P&A system, including media accounts, newspaper articles, telephone calls (including anonymous calls) from any source alleging abuse or neglect of an individual with mental illness.

Department or *HHS* means the U.S. Department of Health and Human Services.

Designated Official is the State official or public or private entity empowered by the Governor or State legislature to be accountable for the proper use of funds by the P&A system.

Director means the Director of the Center for Mental Health Services, Substance Abuse and Mental Health Services Administration, or his or her designee.

Facility includes any public or private residential setting that provides overnight care accompanied by treatment services. Facilities include, but are not limited to the following: general and psychiatric hospitals, nursing homes, board and care homes, community housing, juvenile detention facilities, homeless shelters, and jails and prisons, including all general areas as well as special mental health or forensic units.

Fiscal Year or *FY* means the Federal fiscal year (October 1–September 30) unless otherwise specified.

Full Investigation is based upon a complaint or a determination of probable cause and means the access to facilities, clients and records authorized under this part that is necessary for a P&A system to make a determination about whether an allegation of abuse or neglect is taking place or has taken place. Full investigations may be conducted independently or in cooperation with other agencies authorized to conduct similar investigations.

Governor means the chief executive officer of the State, Territory or the District of Columbia, or his or her designee, who has been formally designated to act for the Governor in carrying out the requirements of the Act and this part.

Individual with Mental Illness means an individual who has a significant mental illness or emotional impairment, as determined by a mental health professional qualified under the laws and regulations of the State and

(1) Who is an inpatient or resident in a facility rendering care or treatment, even if the whereabouts of such impatient or resident is unknown;

(2) Who is in the process of being admitted to a facility rendering care or treatment, including persons being transported to such a facility, or

(3) Who is involuntarily confined in a detention facility, jail or prison.

Legal Guardian, Conservator, and Legal Representative all mean an individual whose appointment is made and regularly reviewed by a State court or agency empowered under State law to appoint and review such officers, and having authority to consent to health/mental health care or treatment of an individual with mental illness. It does not include persons acting only as a representative payee, persons acting only to handle financial payments, attorneys or persons acting on behalf of an individual with mental illness only in individual legal matters, or officials responsible for the provision of health or mental health services to an individual with mental illness, or their designees.

Neglect means a negligent act or omission by an individual responsible for providing services in a facility rendering care or treatment which caused or may have caused injury or death to an individual with mental illness or which placed an individual with mental illness at risk of injury or death, and includes, but is not limited to, acts or omissions such as failure to: establish or carry out an appropriate individual program or treatment plan (including a discharge plan); provide adequate nutrition, clothing, or health care; and the failure to provide a safe environment which also includes failure to maintain adequate numbers of appropriately trained staff.

Private Entity means a nonprofit or for-profit corporation, partnership or other nongovernmental organization.

Probable cause means reasonable grounds for belief that an individual with mental illness has been, or may be at significant risk of being subject to abuse or neglect. The individual making such determination may base the decision on reasonable inferences drawn from his or her experience or training regarding similar incidents, conditions or problems that are usually associated with abuse or neglect.

Program means activities carried out by the P&A system and operating as part of a P&A system to meet the requirements of the Act.

Public Entity means an organizational unit of a State or local government or a quasi-governmental entity with one or more governmental powers.

System means the organization or agency designated in a State to administer and operate a protection and advocacy program under Part C of the Developmental Disabilities Assistance and Bill of Rights Act (42 U.S.C. 6041, 6042) and thereby eligible to administer a program for individuals with mental illness.

Subpart A—Basic Requirements

§51.3 Formula for determining allotments.

The Secretary shall make allotments to eligible Systems from amounts apportioned each year under the Act on the basis of a formula prescribed by the Secretary in accordance with the requirements of sections 112 and 113 of the Act (42 U.S.C. 10822 and 10823).

§51.4 Grants administration requirements.

The following parts of titles 42 and 45 CFR apply to grants funded under this part.

42 CFR Part 50, Subpart D.
45 CFR Part 16—Procedures of the Departmental Grant Appeal Board.
45 CFR Part 74—Administration of Grants.
45 CFR Part 75—Informal Grant Appeals Procedures.
45 CFR Part 76—Government-wide Debarment and Suspension (Nonprocurement) and Government-wide Requirements for Drug-Free Workplace.
45 CFR Part 80—Nondiscrimination under Programs Receiving Federal Assistance through the Department of Health and Human Services—Effectuation of Title VI of the Civil Rights Act of 1964.
45 CFR Part 81—Practice and Procedure for Hearings under Part 80 of This Title.
45 CFR Part 84—Nondiscrimination on the Basis of Handicap in Programs and Activities Receiving or Benefiting from Federal Financial Assistance.
45 CFR Part 86—Nondiscrimination on the Basis of Sex in Education Programs and Activities Receiving Federal Financial Assistance.
45 CFR Part 91—Nondiscrimination on the Basis of Age in Education Programs and Activities Receiving Federal Financial Assistance from HHS.
45 CFR Part 92—Uniform Administrative Requirements for Grants and Cooperative Agreements to State and Local Governments.
45 CFR Part 93—New Restrictions on Lobbying.
45 CFR Part 1386, subpart A.

§51.5 Eligibility for allotment.

(a) Federal financial assistance for protection and advocacy activities for individuals with mental illness will be given only to a System that has been established under Part C of the Developmental Disabilities Assistance and Bill of Rights Act (42 U.S.C. 6041, *et seq.*) and designated in accordance with 45 CFR part 1386, subpart B.

(b) The P&A system must meet the requirements of sections 105 and 111 of the Act (42 U.S.C. 10805 and 10821) and that P&A system must be operational. Each system shall submit an application at the beginning of each PAIMI authorization period. This application

shall contain at a minimum the program priorities and budget for the first year of the authorization period and the required assurances and certifications. Thereafter, the system shall submit yearly updates of the budget and program priorities for the upcoming fiscal year through its annual report.

(c) Written assurances of compliance with sections 105 and 111 of the Act (42 U.S.C. 10805 and 10821) and other requirements of the Act and this part shall be submitted by the P&A system in the format designated by the Director. These assurances will remain in effect for the period specified in the application for funds unless changes occur within the State which affect the functioning of the P&A system, in which case an amendment will be required 30 days prior to the effective date of the change. The P&A system shall also provide the Department the name of the designated official.

(d) The Governor's written assurance that the allotments made available under the Act will be used to supplement and not to supplant the level of non-Federal funds available in the State to protect and advocate the rights of individuals with mental illness shall be submitted by the P&A system. The Governor may provide this assurance along with the assurances provided to ADD under 45 CFR part 1386, as long as it can reasonably be construed as applying to the PAIMI program. Any future ''supplement and not supplant'' assurance shall explicitly refer to the PAIMI program.

§ 51.6 Use of allotments.

(a) Allotments must be used to supplement and not to supplant the level of non-Federal funds available in the State to protect and advocate the rights of individuals with mental illness.

(b) Allotments may not be used to support lobbying activities to influence proposed or pending Federal legislation or appropriations. This restriction does not affect the right of any P&A system, organization or individual to petition Congress or any other government body or official using other resources.

(c) Allotments may not be used to produce or distribute written, audio or visual materials or publicity intended or designed to support or defeat any candidate for public office.

(d) If an eligible P&A system is a public entity, that P&A system shall not be required by the State to obligate more than five percent of its annual allotment for State oversight administrative expenses under this grant such as costs of internal or external evaluations, monitoring or auditing. This restriction does not include:

(1) Salaries, wages and benefits of program staff;

(2) Costs associated with attending governing board or advisory council meetings; or

(3) Expenses associated with the provision of training or technical assistance for staff, contractors, members of the governing board or advisory council.

(e) No more than ten percent of each annual allotment may be used for providing technical assistance and training, including travel expenses for staff, contractors, or members of the governing board or advisory council as defined in § 51.27.

(f) Allotments may be used to pay the otherwise allowable costs incurred by a P&A system in bringing lawsuits in its own right to redress incidents of abuse or neglect, discrimination, and other rights violations impacting on individuals with mental illness and when it appears on behalf of named plaintiffs or a class of plaintiffs for such purposes.

§ 51.7 Eligibility for protection and advocacy services.

In accordance with section 105(a)(1)(C) of the Act (42 U.S.C. 10805(a)(1)(C)) and the priorities established by the P&A system governing authority, together with the advisory council, pursuant to section 105(c)(2)(B) of the Act (42 U.S.C. 10805(c)(2)(B)), allotments may be used:

(a) To provide protection and advocacy services for:

(1) Individuals with mental illness as defined in 42 U.S.C. 10802(4) and 10805(a), including persons who report matters which occurred while they were individuals with mental illness;

(2) Persons who were individuals with mental illness who are residents of the

State, but only with respect to matters which occur within 90 days after the date of the discharge of such individuals from a facility providing care or treatment; and

(3) Individuals with mental illness in Federal facilities rendering care or treatment who request representation by the eligible P&A system. Representation may be requested by an individual with mental illness, or by a legal guardian, conservator or legal representative.

(b) To provide representation of clients in civil commitment proceedings if the P&A system is acting on behalf of an eligible individual to obtain judicial review of his or her commitment in order to appeal or otherwise challenge acts or omissions which have subjected the individual to abuse or neglect or otherwise violated his or her rights. This restriction does not prevent a P&A system from representing clients in commitment or recommitment proceedings using other resources so long as this representation does not conflict with responsibilities under the Act.

§51.8 Annual reports.

By January 1 of each year, a report shall be submitted, pursuant to section 105(a)(7) of the Act (42 U.S.C. 10805(a)(7)), to the Secretary which is in the format designated by the Secretary.

EFFECTIVE DATE NOTE: At 62 FR 53564, Oct. 15, 1997, §51.8 was added. This section contains information collection and recordkeeping requirements and will not become effective until approval has been given by the Office of Management and Budget.

§51.9 [Reserved]

§51.10 Remedial actions.

Failure to submit an annual report in the designated format on time or to submit requested information and documentation, corrective action plans and ongoing implementation status reports in response to Federal review and monitoring activities or to satisfy any other requirement of the Act, this part, or other requirements, may be considered a breach of the terms and conditions of the grant award and may required remedial action, such as the suspension or termination of an active grant, withholding of payments or converting to a reimbursement method of payment. Any remedial actions shall be taken consistent with 45 CFR Part 74 and 42 CFR Part 50, as appropriate.

EFFECTIVE DATE NOTE: At 62 FR 53564, Oct. 15, 1997, §51.10 was added. This section contains information collection and recordkeeping requirements and will not become effective until approval has been given by the Office of Management and Budget.

§§51.11–51.20 [Reserved]

Subpart B—Program Administration and Priorities

§51.21 Contracts for program operations.

(a) An eligible P&A system should work cooperatively with existing advocacy agencies and groups and, where appropriate, consider entering into contracts for protection and advocacy services with organizations already working on behalf of individuals with metal illness. Special consideration should be given to contracting for the services of groups run by individuals who have received or are receiving mental health services or by family members of such individuals.

(b) An eligible P&A system may contract for the operation of all or part of its program with another public or private nonprofit organization with demonstrated experience in working with individuals with mental illness provided that:

(1) Any organization that will operate the full program meets the requirements of section 104(a)(1), 105 and 111 of the Act (42 U.S.C. 10804(a)(1), 10805 and 10821) and has the capacity to perform protection and advocacy activities throughout the State;

(2) The eligible P&A system institutes oversight and monitoring procedures which ensure that this system will be able to meet all applicable terms, conditions and obligations of the Federal grant;

(3) The eligible P&A system and the contractor organization enter into a written agreement that includes at least the following:

(i) A description of the protection and advocacy services to be provided;

(ii) The type of personnel, their qualifications and training;

(iii) The methods to be used;

(iv) A timetable for performance;

(v) A budget;

(vi) Assurances that the contractor will meet all applicable terms and conditions of the grant;

(vii) Assurances that the contractor has adequate management and fiscal systems in place, including insurance coverage, if appropriate:

(viii) Assurances that the contractor's staff is trained to provide advocacy services to and conduct full investigations on behalf of individuals with mental illness; and

(ix) Assurances that the contractor staff is trained to work with family members of clients served by the P&A system where the clients are:

(A) Minors;

(B) Legally competent and choose to involve the family member; or,

(C) Legally incompetent and the legal guardians, conservators or other legal representatives are family members.

§ 51.22 Governing authority.

(a) Each P&A system shall have a governing authority responsible for its planning, designing, implementing and functioning. It shall, jointly with the advisory council, annually establish program priorities and policies.

(b) If the P&A system is organized with a multi-member governing board:

(1) Each P&A system shall establish policies and procedures for the selection of its governing board members and for the board evaluation of the P&A system director. The terms of board members shall be staggered and for 4 years except that any member appointed to fill a vacancy for an unexpired term shall serve for the remainder of such term. A member who has been appointed for a term of 4 years may not be reappointed to the governing board during the 2-year period beginning on the date on which such 4-year term expired.

(2) The board shall be composed of members who broadly represent or are knowledgeable about the needs of the clients served by the P&A system and shall include a significant representation of individuals with mental illness who are, or have been eligible for services, or have received or are receiving mental health services, and family members, guardians, advocates, or authorized representatives of such individuals.

(3) If the governing authority is organized as a private nonprofit entity, the chairperson of the advisory council shall be a member of the governing board.

(c) Continuing efforts shall be made to include members of racial and ethnic minority groups as board members.

(d) Any member of the advisory council may also serve on the governing board.

§ 51.23 Advisory council.

(a) Each P&A system shall establish an advisory council to:

(1) Provide independent advice and recommendations to the system.

(2) Work jointly with the governing authority in the development of policies and priorities.

(3) Submit a section of the system's annual report as required under § 51.8.

(b) Members of the council shall include attorneys, mental health professionals, individuals from the public who are knowledgeable about mental illness, the advocacy needs of persons with mental illness and have demonstrated a substantial commitment to improving mental health services, a provider of mental health services, individuals who have received or are receiving mental health services and family members of such individuals. Continuing efforts shall be made to include members of racial and ethnic minority groups on the advisory council.

(1) At least 60 percent of the membership of the advisory council shall be comprised of individuals who have received or are receiving mental health services or who are family members of such individuals. At least one family member shall be a primary care giver for an individual who is currently a minor child or youth who is receiving or has received mental health services;

(2) The council shall be chaired by an individual who has received or is receiving mental health services or who is a family member of such an individual;

(3) The advisory council shall meet no less than three times annually. The terms of council members shall be staggered and for 4 years except that any member appointed to fill a vacancy for an unexpired term shall serve for the remainder of such term. A member who has been appointed for a term of 4 years may not be reappointed to the council during the 2-year period beginning on the date on which such 4-year term expired.

(c) Each P&A system shall provide its advisory council with reports, materials and fiscal data to enable review of existing program policies, priorities and performance outcomes. Such submissions shall be made at least annually and shall report expenditures for the past two fiscal years, as well as projected expenses for the next fiscal year, identified by budget category (e.g., salary and wages, contract for services, administrative expenses) including the amount allotted for training of each the advisory council, governing board and staff.

(d) Reimbursement of expenses. (1) Allotments may be used to pay for all or a part of the expenses incurred by members of the advisory council in order to participate in its activities. Expenses may include transportation costs, parking, meals, hotel costs, per diem expenses, stipends or subsistence allowances, and the cost of day care or child care (or its equivalent for the child's travel and subsistence expenses) for their dependents with mental illness or developmental disabilities.

(2) Each P&A system shall establish its own policies and procedures for reimbursement of expenses of council members, taking into account the needs of individual council members, available resources, and applicable restrictions on use of grant funds, including the restrictions in §§51.31(e) and 51.6(e).

EFFECTIVE DATE NOTE: At 62 FR 53564, Oct. 15, 1997, §51.23 was added. This section contains information collection and recordkeeping requirements and will not become effective until approval has been given by the Office of Management and Budget.

§51.24 Program priorities.

(a) Program priorities and policies shall be established annually by the governing authority, jointly with the advisory council. Priorities shall specify short-term program goals and objectives, with measurable outcomes, to implement the established priorities. In developing priorities, consideration shall be given to, at a minimum, case selection criteria, the availability of staff and monetary resources, and special problems and cultural barriers faced by individuals with mental illness who are multiply handicapped or who are members of racial or ethnic minorities in obtaining protection of their rights. Systemic and legislative activities shall also be addressed in the development and implementation of program priorities.

(b) Members of the public shall be given an opportunity, on an annual basis, to comment on the priorities established by, and the activities of, the P&A system. Procedures for public comment must provide for notice in a format accessible to individuals with mental illness, including such individuals who are in residential facilities, to family members and representatives of such individuals and to other individuals with disabilities. Procedures for public comment must provide for receipt of comments in writing or in person.

§51.25 Grievance procedure.

(a) The P&A system shall establish procedures to address grievances from:

(1) Clients or prospective clients of the P&A system to assure that individuals with mental illness have full access to the services of the program; and

(2) Individuals who have received or are receiving mental health services in the State, family members of such individuals, or representatives of such individuals or family members to assure that the eligible P&A system is operating in compliance with the Act.

(b) At a minimum, the grievance procedures shall provide for:

(1) An appeal to the governing authority from any final staff review and/or determination; in cases where the governing authority is the director of the P&A system, the final review and/or determination shall be made by a superior of the governing authority, e.g., a supervisor, or by an independent

entity, e.g., an appointed board or committee.

(2) Reports, at least annually, to the governing authority and the advisory council describing the grievances received and processed and their resolution;

(3) Identification of individuals responsible for review;

(4) A timetable to ensure prompt notification concerning the grievance procedure to clients, prospective clients or persons denied representation, and to ensure prompt resolution;

(5) A written response to the grievant; and

(6) Protection of client confidentiality.

EFFECTIVE DATE NOTE: At 62 FR 53564, Oct. 15, 1997, § 51.25 was added. This section contains information collection and recordkeeping requirements and will not become effective until approval has been given by the Office of Management and Budget.

§ 51.26 Conflicts of interest.

The P&A system must develop appropriate policies and procedures to avoid actual or apparent conflict of interest involving clients, employees, contractors and subcontractors, and members of the governing authority and advisory council, particularly with respect to matters affecting client services, particular contracts and subcontracts, grievance review procedures, reimbursements and expenses, and the employment or termination of staff.

§ 51.27 Training.

A P&A system shall provide training for program staff, and may also provide training for contractors, governing board and advisory council members to enhance the development and implementation of effective protection and advocacy services for individuals with mental illness, including at a minimum:

(a)(1) Training of program staff to work with family members of clients served by the program where the individual with mental illness is:

(i) A minor,

(ii) Legally competent and chooses to involve the family member; or

(iii) Legally incompetent and the legal guardian, conservator or other legal representative is a family member.

(2) This training may be provided by individuals who have received or are receiving mental health services and family members of such individuals.

(b) Training to enhance sensitivity to and understanding of individuals with mental illness who are members of racial or ethnic minorities and to develop strategies for outreach to those populations.

(c) Training to conduct full investigations of abuse or neglect.

§§ 51.28–51.30 [Reserved]

Subpart C—Protection and Advocacy Services

§ 51.31 Conduct of protection and advocacy activities.

(a) Consistent with State and Federal law and the canons of professional ethics, a P&A system may use any appropriate technique and pursue administrative, legal or other appropriate remedies to protect and advocate on behalf of individuals with mental illness to address abuse, neglect or other violations of rights.

(b) A P&A system shall establish policies and procedures to guide and coordinate advocacy activities. The P&A system shall not implement a policy or practice restricting the remedies which may be sought on behalf of individuals with mental illness or compromising the authority of the P&A system to pursue such remedies through litigation, legal action or other forms of advocacy. However, this requirement does not prevent the P&A system from placing limitations on case or client acceptance criteria developed as part of the annual priorities. Prospective clients must be informed of any such limitations at the time they request service.

(c) Wherever possible, the program should establish an ongoing presence in residential mental health care or treatment facilities, and relevant hospital units.

(d) Program activities should be carried out in a manner which allows program staff to:

(1) Interact regularly with those individuals who are current or potential recipients of protection and advocacy services;

(2) Interact regularly with staff providing care or treatment;

(3) Obtain information and review records; and

(4) Communicate with family members, social and community service workers and others involved in providing care or treatment.

(e) A P&A system may support or provide training, including related travel expenses, for individuals with mental illness, family members of such individuals, and other persons who are not program staff, contractors, or board or council members, to increase knowledge about protection and advocacy issues, to enhance leadership capabilities, or to promote Federal-State and intra-State cooperation on matter related to mental health system improvement. Decisions concerning the selection of individuals to receive such training shall be made in accordance with established policies, procedures and priorities of the P&A system.

(f) A P&A system may monitor, evaluate and comment on the development and implementation of Federal, State and local laws, regulations, plans, budgets, levies, projects, policies and hearings affecting individuals with mental illness as a part of federally funded advocacy activities. A P&A system shall carry out systemic advocacy—those efforts to implement changes in policies and practices of systems that impact persons with mental illness.

(g) Determination of ''probable cause'' may result from P&A system monitoring or other activities, including observation by P&A system personnel, and reviews of monitoring and other reports prepared by others whether pertaining to individuals with mental illness or to general conditions affecting their health or safety.

(h) A P&A which is a public P&A system shall be free from hiring freezes, reductions in force, prohibitions on staff travel, or other policies imposed by the State to the extend that such policies would impact program staff or activities funded with Federal dollars and would prevent the P&A system from carrying out its mandates under the Act.

(i) A P&A system may exercise its authority under State law where the authority exceeds the authority required by the Act. However, State law must not diminish the required authority of the Act.

§51.32 Resolving disputes.

(a) Each P&A system is encouraged to develop and employ techniques such as those involving negotiation, conciliation and mediation to resolve disputes early in the protection and advocacy process.

(b) Disputes should be resolved whenever possible through nonadversarial process involving negotiation, mediation and conciliation. Consistent with State and Federal laws and canons of professional responsibility, family members should be involved in this process, as appropriate, where the individual with mental illness is:

(1) A minor,

(2) Legally competent and chooses to involve the family member, or

(3) Legally incompetent and the legal guardian, conservator or other legal representative is a family member or the legal guardian, conservator or other legal representative chose to involve the family member.

(c) A P&A system must exhaust in a timely manner all administrative remedies, where appropriate, prior to initiating legal action in a Federal or State court.

(d) Paragraph (c) of this section does not apply to any legal action instituted to prevent or eliminate imminent serious harm to an individual with mental illness nor does it apply in circumstances where administrative procedures do not exist. If in pursing administrative remedies, the P&A system determines that any matter with respect to an individual with mental illness with mental illness with not be resolved within a reasonable time, the P&A system may pursue alternative remedies, including initiating legal action.

(e) A P&A system shall be held to the standard of exhaustion of remedies provided under State and Federal law. The Act imposes no additional burden respecting exhaustion of remedies.

§§ 51.33–51.40 [Reserved]

Subpart D—Access to Records, Facilities and Individuals

§ 51.41 Access to records.

(a) Access to records shall be extended promptly to all authorized agents of a P&A system.

(b) A P&A system shall have access to the records of any of the following individuals with mental illness:

(1) An individual who is a client of the P&A system if authorized by that individual or the legal guardian, conservator or other legal representative.

(2) An individual, including an individual who has died or whose whereabouts is unknown to whom all of the following conditions apply:

(i) The individual, due to his or her mental or physical condition, is unable to authorize the P&A system to have access.

(ii) The individual does not have a legal guardian, conservator or other legal representative, or the individual's guardian is the State or one of its political subdivisions; and

(iii) A complaint or report has been received and the P&A system has determined that there is probable cause to believe that the individual has been or may be subject to abuse or neglect.

(3) An individual who has a legal guardian, conservator, or other legal representative, with respect to whom a complaint or report has been received by the P&A system and with respect to whom the P&A system has determined that there is probable cause to believe that the health or safety of the individual is in serious and immediate jeopardy, whenever all of the following conditions exists:

(i) The P&A system has made a good faith effort to contact the representative upon prompt receipt of the representative's name and address;

(ii) The P&A system has made a good faith effort to offer assistance to the representative to resolve the situation; and

(iii) The representative has failed or refused to act on behalf of the individual.

(c) Information and individual records, whether written or in another medium, draft or final, including handwritten notes, electronic files, photographs or video or audio tape records, which shall be available to the P&A system under the Act shall include, but not be limited to:

(1) Information and individual records, obtained in the course of providing intake, assessment, evaluation, supportive and other services, including medical records, financial records, and reports prepared or received by a member of the staff of a facility or program rendering care or treatment. This includes records stored or maintained in locations other than the facility or program as long as the system has obtained appropriate consent consistent with section 105(a)(4) of the Act. The system shall request of facilities that in requesting records from service providers or other facilities on residents that they indicate in the release form the records may be subject to review by a system.

(2) Reports prepared by an agency charged with investigating abuse neglect, or injury occurring at a facility rendering care or treatment, or by or for the facility itself, that describe any or all of the following:

(i) Abuse, neglect, or injury occurring at the facility;

(ii) The steps taken to investigate the incidents;

(iii) Reports and records, including personnel records, prepared or maintained by the facility, in connection with such reports of incidents; or

(iv) Supporting information that was relied upon in creating a report, including all information and records used or reviewed in preparing reports of abuse, neglect or injury such as records which describe persons who were interviewed, physical and documentary evidence that was reviewed, and the related investigative findings.

(3) Discharge planning records.

(4) Reports prepared by individuals and entities performing certification or licensure reviews, or by professional accreditation organizations, as well as related assessments prepared for the facility by its staff, contractors or related entities, except that nothing in this section is intended to preempt State law protecting records produced by medical care evaluation or peer review committees.

(5) Professional, performance, building or other safety standards, demographic and statistical information relating to the facility.

(d) A P&A system shall have reasonable access and authority to interview and examine all relevant records of any facility service recipient (consistent with the provisions of section 105(a)(4) of the Act) or employee.

(e) A P&A system shall be permitted to inspect and copy records, subject to a reasonable charge to offset duplicating costs.

§ 51.42 Access to facilities and residents.

(a) Access to facilities and residents shall be extended to all authorized agents of a P&A system.

(b) A P&A system shall have reasonable unaccompanied access to public and private facilities and programs in the State which render care or treatment for individuals with mental illness, and to all areas of the facility which are used by residents or are accessible to residents. The P&A system shall have reasonable unaccompanied access to residents at all times necessary to conduct a full investigation of an incident of abuse or neglect. This authority shall include the opportunity to interview any facility service recipient, employee, or other persons, including the person thought to be the victim of such abuse, who might be reasonably believed by the system to have knowledge of the incident under investigation. Such access shall be afforded, upon request, by the P&A system when:

(1) An incident is reported or a complaint is made to the P&A system;

(2) The P&A system determines there is probable cause to believe that an incident has or may have occurred; or

(3) The P&A system determines that there is or may be imminent danger of serious abuse or neglect of an individual with mental illness.

(c) In addition to access as prescribed in paragraph (b) of this section, a P&A system shall have reasonable unaccompanied access to facilities including all area which are used by residents, are accessible to residents, and to programs and their residents at reasonable times, which at a minimum shall include normal working hours and visiting hours. Residents include adults or minors who have legal guardians or conservators. P&A activities shall be conducted so as to minimize interference with facility programs, respect residents' privacy interests, and honor a resident's request to terminate an interview. This access is for the purpose of:

(1) Providing information and training on, and referral to programs addressing the needs of individuals with mental illness, and information and training about individual rights and the protection and advocacy services available from the P&A system, including the name, address, and telephone number of the P&A system.

(2) Monitoring compliance with respect to the rights and safety of residents; and

(3) Inspecting, viewing and photographing all areas of the facility which are used by residents or are accessible to residents.

(d) Unaccompanied access to residents shall include the opportunity to meet and communicate privately with individuals regularly, both formally and informally, by telephone, mail and in person. Residents include minors or adults who have legal guardians or conservators.

(e) The right of access specified in paragraph (c) of this section shall apply despite the existence of any State or local laws or regulations which restrict informal access to minors and adults with legal guardians or conservators. The system shall make very effort to ensure that the parents of minors or guardians of individuals in the care of a facility are informed that the system will be monitoring activities at the facility and may in the course of such monitoring have access to the minor or adult with a legal guardian. The system shall take no formal action on behalf of individuals with legal guardians or conservators, or initiate a formal attorney/client or advocate/client relationship without appropriate consent, except in emergency situations as described in §51.41(b)(3).

(f) A P&A system providing representation to individuals with mental illness in Federal facilities shall have all

the rights and authority accorded other representatives of residents of such facilities pursuant to State and Federal laws.

§ 51.43 Denial or delay of access.

If a P&A system's access to facilities, programs, residents or records covered by the Act or this part is delayed or denied, the P&A system shall be provided promptly with a written statement of reasons, including, in the case of a denial for alleged lack of authorization, the name, address and telephone number of the legal guardian, conservator, or other legal representative of an individual with mental illness. Access to facilities, records or residents shall not be delayed or denied without the prompt provision of written statements of the reasons for the denial.

§ 51.44 [Reserved]

§ 51.45 Confidentiality of protection and advocacy system records.

(a) Records maintained by the P&A system are the property of the P&A system which must protect them from loss, damage, tampering or use by unauthorized individuals. The P&A system must:

(1) Except as provided elsewhere in this section, keep confidential all records and information, including information contained in any automated electronic database pertaining to:

(i) Clients to the same extent as is required under Federal or State laws for a provider of mental health services;

(ii) Individuals who have been provided general information or technical assistance on a particular matter;

(iii) Identity of individuals who report incidents of abuse or neglect or furnish information that forms the basis for a determination that probable cause exists; and

(iv) Names of individuals who are residents and provide information for the record.

(2) Have written policies governing access to, storage of, duplication and release of information from client records; and

(3) Obtain written consent from the client, if competent, or from his or her legal representative, from individuals who have been provided general information or technical assistance on a particular matter and from individuals who furnish reports or information that forms the basis for a determination of probable cause, before releasing information to individuals not otherwise authorized to receive it.

(b) Nothing in this subpart shall prevent the P&A system from. (1) Issuing a public report of the results of an investigation which maintains the confidentiality of the individuals listed in paragraph (a)(1) of this section or,

(2) Reporting the results of an investigation which maintains the confidentiality of individual service recipients to responsible investigative or enforcement agencies should an investigation reveal information concerning the facility, its staff, or employees warranting possible sanctions or corrective action. this information may be reported to agencies responsible for facility licensing or accreditation, employee discipline, employee licensing or certification, or criminal prosecution.

(c) For purposes of any periodic audit, report, or evaluation of the performance of the P&A system, the Secretary shall not require the P&A system to disclose the identity, or any other personally identifiable information, of any individual requesting assistance under a program. This requirement does not restrict access by the Department or other authorized Federal or State officials to client records or other records of the P&A system when deemed necessary for audit purposes and for monitoring P&A system compliance with applicable Federal or State laws and regulations. The purpose of obtaining such information is solely to determine that P&A systems are spending their grant funds awarded under the Act on serving individuals with mental illness. Officials that have access to such information must keep it confidential to the maximum extent permitted by law and regulations. If photostatic copies of materials are provided, then the destruction of such evidence is required once such reviews have been completed.

(d) Subject to the restrictions and procedures set out in this section, implementing section 106 (a) and (b) of the Act (42 U.S.C. 10806 (a) and (b)), this

part does not limit access by a legal guardian, conservator, or other legal representative of an individual with mental illness, unless prohibited by State or Federal law, court order or the attorney-client privilege.

§51.46 Disclosing information obtained from a provider of mental health services.

(a) Except as provided in paragraph (b) of this section, if a P&A system has access to records pursuant to section 105(a)(4) of the Act (42 U.S.C. 10805(a)(4)) which, under Federal or State law, are required to be maintained in a confidential manner by a provider of mental health services, it may not disclose information from such records to the individual who is the subject of the information if the mental health professional responsible for supervising the provision of mental health services to that individual has given the P&A system a written determination that disclosure of such information to the individual would be detrimental to the individual's health. The provider shall be responsible for giving any such written determination to the P&A system at the same time as access to the records containing the information is granted.

(b)(1) If the disclosure of information has been denied under paragraph (a) of this section to an individual, the following individuals or the P&A system may select another mental health professional to review the information and to determine if disclosure of the information would be detrimental to the individual's health:

(i) Such individual;

(ii) The legal guardian, conservator or other legal representative of the individual; or

(iii) An eligible P&A system, acting on behalf of an individual:

(A) Whose legal guardian is the State; or

(B) Whose legal guardian, conservator, or other legal representative has not, within a reasonable time after the denial of access to information under paragraph (a), selected a mental health professional to review the information.

(2) If such mental health professional determines, based on professional judgment, that disclosure of the information would not be detrimental to the health of the individual, the P&A system may disclose such information to the individual.

(c) The restriction in paragraph (b) of this section does not affect the P&A system's access to the records.

PART 51a—PROJECT GRANTS FOR MATERNAL AND CHILD HEALTH

Sec.
51a.1 To which programs does this regulation apply?
51a.2 Definitions.
51a.3 Who is eligible to apply for Federal funding?
51a.4 How is application made for Federal funding?
51a.5 What criteria will DHHS use to decide which projects to fund?
51a.6 What confidentiality requirements must be met?
51a.7 What other DHHS regulations apply?
51a.8 What other conditions apply to these grants?

AUTHORITY: Sec. 1102 of the Social Security Act, 49 Stat. 647 (42 U.S.C. 1302); sec. 502(a), 502(b)(1)(A), and 506(a)(3) of the Social Security Act, 95 Stat. 819–20 (42 U.S.C. 702(a), 702(b)(1)(A) and 706(a)(3)).

SOURCE: 51 FR 7727, Mar. 5, 1986, unless otherwise noted.

§51a.1 To which programs does this regulation apply?

The regulation in this part applies to grants, contracts, and other arrangements under section 502(a) and 502(b)(1)(A) of the Social Security Act, as amended (42 U.S.C. 702(a) and 702(b)(1)(A)), the Maternal and Child Health (MCH) Federal Set-Aside project grant programs. Section 502(a) authorizes funding for special projects of regional and national significance (SPRANS), research and training projects with respect to maternal and child health and children with special health care needs (including early intervention training and services development); genetic disease testing, counseling and information programs; comprehensive hemophilia diagnostic and treatment centers; projects for screening and follow-up of newborns for sickle cell anemia and other genetic disorders; and special maternal and child health improvement projects. Section 502(b)(1)(A) authorizes funding

for projects termed community integrated service system (CISS) projects for the development and expansion of: maternal and infant health home visiting; projects to increase the participation of obstetricians and pediatricians in title V and title XIX programs; integrated maternal and child health service systems; maternal and child health centers operating under the direction of not-for-profit hospitals; rural maternal and child health programs; and outpatient and community-based services programs for children with special health care needs.

[59 FR 36706, July 19, 1994]

§ 51a.2 Definitions.

Act means the Social Security Act, as amended.

Genetic diseases means inherited disorders caused by the transmission of certain aberrant genes from one generation to another.

Hemophilia means a genetically transmitted bleeding disorder resulting from a deficiency of a plasma clotting factor.

Institution of higher learning means any college or university accredited by a regionalized body or bodies approved for such purpose by the Secretary of Education, and any teaching hospital which has higher learning among its purposes and functions and which has a formal affiliation with an accredited school of medicine and a full-time academic medical staff holding faculty status in such school of medicine.

Secretary means the Secretary of Health and Human Services or his or her designee.

§ 51a.3 Who is eligible to apply for Federal funding?

(a) With the exception of training and research, as described in paragraph (b) of this section, any public or private entity, including an Indian tribe or tribal organization (as those terms are defined at 25 U.S.C. 450b) is eligible to apply for federal funding under this Part.

(b) Only public or nonprofit private institutions of higher learning may apply for training grants. Only public or nonprofit institutions of higher learning and public or private nonprofit agencies engaged in research or in programs relating to maternal and child health and/or services for children with special health care needs may apply for grants contracts or cooperative agreements for research in maternal and child health services or in services for children with special health care needs.

[59 FR 36706, July 19, 1994]

§ 51a.4 How is application made for Federal funding?

An application for funding under the MCH Federal Set-Aside project grant programs must be submitted to the Secretary at such time and in such manner as the Secretary may prescribe. It must include a budget and narrative plan of the manner in which the project will meet each of the requirements prescribed by the Secretary. The plan must describe the project in sufficient detail to identify clearly the nature, need, and specific objectives of, and methodology for carrying out, the project.

(Approved by the Office of Management and Budget under control number 0915–0050)

[59 FR 36706, July 19, 1994]

§ 51a.5 What criteria will DHHS use to decide which projects to fund?

(a) The Secretary will determine the allocation of funds available under sections 502(a) and 502(b)(1)(A) of the Act for each of the activities described in § 51a.1.

(b) Within the limit of funds determined by the Secretary to be available for each of the activities described in § 51a.1, the Secretary may award Federal funding for projects under this part to applicants which will, in his or her judgment, best promote the purpose of title V of the Social Security Act and address achievement of Healthy Children 2000 objectives,[1] taking, the following factors into account:

[1] Healthy Children 2000: National Health Promotion and Disease Prevention Objectives Related to Mothers, Infants, Children, Adolescents, and Youth is a special compendium of health status goals and national health objectives affecting mothers, infants, children, adolescents, and youth originally published in Healthy People 2000 in September 1990. Potential applicants may obtain a copy of Healthy People 2000 (Full Report:

(1) The extent to which the project will contribute to the advancement of maternal and child health and/or improvement of the health of children with special health care needs;

(2) The extent to which the project is responsive to policy concerns applicable to MCH grants and to program objectives, requirements, priorities and/or review criteria for specific project categories, as published in program announcements or guidance materials.

(3) The extent to which the estimated cost to the Government of the project is reasonable, considering the anticipated results;

(4) The extent to which the project personnel are well qualified by training and/or experience for their roles in the project and the applicant organization has adequate facilities and personnel; and

(5) The extent to which, insofar as practicable, the proposed activities, if well executed, are capable of attaining project objectives.

(c) For the following types of CISS projects, preference for funding will be given to qualified applicants in areas with a high infant mortality rate (relative to the latest average infant mortality rate in the United States or in the State in which the area is located):

(1) Projects for the development and expansion of maternal and infant health home visiting;

(2) Projects to increase the participation of obstetricians and pediatricians in title V and title XIX programs;

(3) Integrated maternal and child health service systems;

(4) Maternal and child health centers operating under the direction of not-for-profit hospitals;

(5) Rural maternal and child health programs; and

(6) Outpatient and community based services for children with special health care needs.

[59 FR 36706, July 19, 1994]

Stock No. 017–001–00474–0 or Healthy People 2000 (Summary Report; Stock No. 017–001–00473–1) through the Superintendent of Documents, Government Printing Office Washington, DC 20402–9325, (telephone: 202 512–1800).

§51a.6 What confidentiality requirements must be met?

All information as to personal facts and circumstances obtained by the project's staff about recipients of services shall be held confidential, and shall not be disclosed without the individual's consent except as may be otherwise required by applicable law or as may be necessary to provide for medical audits by the Secretary with appropriate safeguards for confidentiality of patient records. Otherwise, information may be disclosed only in summary, statistical, or other form which does not identify particular individuals.

§51a.7 What other DHHS regulations apply?

(a) Several other DHHS regulations apply to awards under this part. These include, but are not limited to:

42 CFR part 50—Policies of general applicability:
- subpart B—Sterilization of persons in federally assisted family planning projects.
- subpart C—Abortions and related medical services in federally assisted programs of the Public Health Service.
- subpart E—Maximum allowable cost for drugs.

45 CFR part 76—Governmentwide debarment and suspension (nonprocurement) and governmentwide requirements for drug-free workplace (grants).

45 CFR part 80—Nondiscrimination under programs receiving Federal assistance through the Department of Health and Human Service—Effectuation of title VI of the Civil Rights Act of 1964.

45 CFR part 81—Practice and procedure for hearings under Part 80 of this title.

45 CFR part 84—Nondiscrimination on the basis of handicap in programs and activities receiving or benefiting from Federal financial assistance.

45 CFR part 86—Nondiscrimination on the basis of sex in education programs and activities receiving or benefiting from Federal financial assistance.

45 CFR part 91—Nondiscrimination on the basis of age in HHS programs or activities receiving Federal financial assistance.

45 CFR part 93—New restrictions on lobbying.

(b) In addition to the above regulations, the following apply to projects funded through grants:

42 CFR part 50—Policies of general applicability:

subpart D—Public Health Service grant appeals procedure.
45 CFR part 16—Procedures of the Departmental Grant Appeals Board.
45 CFR part 74—Administration of grants to nonprofit organizations.
45 CFR part 75—Informal grant appeals procedures.
45 CFR part 92—Administration of grants to State and local governments.

[59 FR 36707, July 19, 1994]

§ 51a.8 What other conditions apply to these grants?

(a) Recipients of project grants will be required to submit such additional information to the Secretary on an annual basis as the Secretary determines, including:

(1) the number of individuals served or trained, as appropriate under the project;

(2) a copy of any evaluation conducted by the recipient; and

(3) a list of Healthy Children 2000 objectives addressed by the project and data on how the project contributed toward meeting the objectives.

(b) The Secretary may at the time of award of project grants under this Part impose additional conditions, including conditions governing the use of information or consent forms, when, in the Secretary's judgment, they are necessary to advance the approved program, the interest of public health, or the conservation of grant funds.

(c) Grant recipients of Healthy Tomorrows Partnership for Children Program, a Community Integrated Service System-funded initiative, must contribute non-Federal matching funds in years 2 through 5 of the project period equal to two times the amount of the Federal Grant Award or such lesser amount determined by the Secretary for good cause shown. Reimbursement for services provided to an individual under a State plan under Title XIX will not be deemed ''non-Federal matching funds'' for the purposes of this provision.

[59 FR 36707, July 19, 1994, as amended at 72 FR 3080, Jan. 24, 2007]

PART 51b—PROJECT GRANTS FOR PREVENTIVE HEALTH SERVICES

Subpart A—General Provisions

Sec.
51b.101 To which programs do these regulations apply?
51b.102 Definitions.
51b.103 What are the general application requirements?
51b.104 Can personnel, supplies, and related items be provided in lieu of cash?
51b.105 Which other HHS regulations apply to these grants?
51b.106 What other conditions apply to these grants?
51b.107 Is participation in preventive health service programs required by these regulations?

Subpart B—Grants for Childhood Immunization Programs

51b.201 To which programs does this subpart apply?
51b.202 Definitions.
51b.203 Who is eligible for a grant under this subpart?
51b.204 What information is required in the application?
51b.205 How will grant applications be evaluated and the grants awarded?
51b.206 How can grant funds be used?

Subpart C [Reserved]

Subpart D—Grants for Venereal Disease Control Programs

51b.401 To which programs does this subpart apply?
51b.402 Definitions.
51b.403 Who is eligible for a grant under this subpart?
51b.404 What are the confidentiality requirements?
51b.405 What information is required in the application?
51b.406 How will grant applications be evaluated and the grants awarded?
51b.407 How can grant funds be used?

Subpart E [Reserved]

Subpart F—Grants for Research, Demonstrations, and Public Information and Education for the Prevention and Control of Venereal Disease

51b.601 To which programs does this subpart apply?
51b.602 Who is eligible for a grant under this subpart?
51b.603 What are the confidentiality requirements?

51b.604 What information is required in the application?
51b.605 How will grant applications be evaluated and the grants awarded?
51b.606 How can grant funds be used?

AUTHORITY: Secs. 317 and 318, Public Health Service Act, 92 Stat. 3574 and 3582 (42 U.S.C. 247b, 247c); sec. 1743 Pub. L. 97–35, 95 Stat. 763 (31 U.S.C. 1243 note).

Subpart A—General Provisions

SOURCE: 48 FR 4473, Feb. 1, 1983, unless otherwise noted.

§51b.101 To which programs do these regulations apply?

The regulations in this part apply to grants for preventive health service programs authorized under section 317 (42 U.S.C. 247b) and for venereal disease prevention and control programs authorized under section 318 (42 U.S.C. 247c) of the Act.

§51b.102 Definitions.

As used in these regulations:

Act means the Public Health Service Act, as amended.

Secretary means the Secretary of Health and Human Services (HHS) or any other officer or employee of that Department to whom the authority involved has been delegated.

State means one of the 50 States, the District of Columbia, Guam, the Commonwealth of Puerto Rico, the Northern Mariana Islands, the Virgin Islands, American Samoa, and the Trust Territory of the Pacific Islands.

§51b.103 What are the general application requirements?

(a) The project application shall contain a full description of the program objectives, plans, and activities. With respect to programs authorized by section 317 of the Act only, the application shall also provide, as the Secretary may require:

(1) The amount of Federal, State, and other funds obligated by the applicant in its latest annual accounting period for the provision of such program.

(2) A description of the services provided by the applicant for this accounting period covered under paragraph (a)(1) of this section.

(3) The amount of Federal funds needed by the applicant to continue providing these services.

(4) A description of any proposed changes in the provision of the services, reasons and priorities, and the amount of Federal funds needed by the applicant to make the changes.

(b) The application shall contain evidence satisfactory to the Secretary that it has been submitted, as appropriate, for action to the planning agency designated by the Secretary under title XV of the Act (42 CFR parts 122 and 123). These grants are subject to the intergovernmental review of Federal programs of Executive Order 12372.

(c) The application shall contain assurances that no one will be denied services because of inability to pay, and that the services are provided in a manner which preserves human dignity and maximizes acceptance.

§51b.104 Can personnel, supplies, and related items be provided in lieu of cash?

The Secretary may reduce a grant by the amount of the fair market value of any supplies (including vaccines and other preventive agents) or equipment furnished a grant recipient when furnished at the request of the recipient. The Secretary also may reduce a grant by the amount of the pay, allowances, travel expenses, and any other costs in connection with the detail of any officer or employee of the Government to the recipient when the detail is at the request of the recipient. The amount the grant is reduced shall be available for payment by the Secretary of the costs incurred in furnishing the supplies or equipment or in detailing personnel and shall be deemed to have been paid to the recipient.

§51b.105 Which other HHS regulations apply to these grants?

Several other HHS regulations apply to grants under this part. These include, but are not limited to:

42 CFR part 50, subpart D—Public Health Service grant appeals procedure
45 CFR part 16—Procedures of the Departmental Grant Appeals Board
45 CFR part 46—Protection of human subjects
45 CFR part 74—Administration of grants

45 CFR part 75—Informal grant appeals procedures
45 CFR part 76—Debarment and suspension from eligibility for financial assistance
45 CFR part 80—Nondiscrimination under programs receiving Federal assistance through the Department of Health and Human Services effectuation of title VI of the Civil Rights Act of 1964
45 CFR part 81—Practice and procedure for hearings under part 80 of this title
45 CFR part 84—Nondiscrimination on the basis of handicap in programs and activities receiving or benefiting from Federal financial assistance
45 CFR part 86—Nondiscrimination on the basis of sex in education programs and activities receiving or benefiting from Federal financial assistance
45 CFR part 91—Nondiscrimination on the basis of age in HHS programs or activities receiving Federal financial assistance

[49 FR 38109, Sept. 27, 1984]

§ 51b.106 What other conditions apply to these grants?

(a) The notice of grant award specifies how long HHS intends to support the project without requiring the project to recompete for funds. This period, called the project period, will usually be for 2 to 5 years.

(b) For budgetary and funding purposes, the project period is generally divided into 12-month intervals called budget periods. A grantee must submit a separate application to have the support continued for each subsequent budget period after the initial award. Decisions regarding continuation awards and the funding level of such awards will be made after consideration of such factors as the grantee's progress and management practices and the availability of funds. In all cases, continuation awards require a determination by HHS that continued funding is in the best interest of the government.

(c) Neither the approval of any application nor the award of any grant commits or obligates the United States in any way to make any additional, supplemental, continuation, or other award with respect to any approved application or portion of an approved application.

(d) Any funds granted pursuant to this subpart shall be expended solely for the purposes for which the funds were granted in accordance with the approved application and budget, the regulations of this part, the terms and conditions of the award, and the applicable cost principles prescribed in subpart Q of 45 CFR part 74.

(e) The Secretary may, at the time of award, impose additional conditions, including conditions governing the use of information or consent forms, when, in the Secretary's judgment, they are necessary to advance the approved program, the interest of the public health, or the conservation of grant funds.

§ 51b.107 Is participation in preventive health service programs required by these regulations?

Nothing in these regulations shall be construed to require any State or political subdivision to have a preventive health service program which would require any person who objects to treatment to be treated under the program.

Subpart B—Grants for Childhood Immunization Programs

SOURCE: 44 FR 40501, July 11, 1979, unless otherwise noted.

§ 51b.201 To which programs does this subpart apply?

The regulations in this subpart apply to the award of grants under section 317 of the Act for programs to immunize children against vaccine preventable diseases.

§ 51b.202 Definitions.

As used in this subpart:

Childhood immunization program means a preventive health service program to immunize children against vaccine preventable diseases including poliomyelitis, measles, mumps, rubella, diphtheria, pertussis, and tetanus.

§ 51b.203 Who is eligible for a grant under this subpart?

An applicant must be a State agency or an agency of a political subdivision of a State which has legal responsibility for disease control under the laws of a State.

§51b.204 What information is required in the application?

(a) The initial application must cover the project period, and must include a description of the following:

(1) The need for grant support.

(2) The immediate (1 year budget period) and long-range (2–5 year project period) objectives of the project in specific and measurable terms.

(3) Current immunization programs and the additional or intensified activities to be carried out to meet the objectives and priorities.

(4) The following program elements should be included and described:

(i) A plan to assure that children begin and complete their immunizations on schedule, including the use of a standard immunization record card, a provider-based tickler system (public and private) for the recall of children, and a hospital-based immunization education program for new mothers.

(ii) Assessment of immunization status of school enterers, children attending licensed day-care centers, and children under 2 years of age and new enrollees under age 5 served in public clinics.

(iii) A plan for surveillance of vaccine-preventable diseases that includes morbidity and mortality reporting as well as field and laboratory investigations.

(iv) Procedures for prompt review of the data collected from the morbidity surveillance system to allow for immediate response to all occurrence of suspected diphtheria and polio cases upon notification and response to suspected measles cases within 48 hours.

(v) A system for monitoring vaccine-associated reactions including a mechanism for responding to persons with vaccine-related complaints.

(vi) A plan to systematically immunize susceptible children at school entry through vigorous enforcement of school immunization laws.

(5) The manner in which the applicant intends to evaluate the project.

(b) An application for a continuation grant must be submitted for each funding period. This continuation application must include the following:

(1) A budget and justification for the grant funds requested.

(2) A summary of the progress achieved during the previous budget period.

(3) A description of any changes in the information shown in the project application.

[48 FR 4474, Feb. 1, 1983]

§51b.205 How will grant applications be evaluated and the grants awarded?

(a) Within the limits of funds available, the Secretary may award a grant to assist in meeting part of the cost of a childhood immunization program. Grants will be awarded to those applicants whose projects he determines will best promote the purposes of section 317 of the Act. Before awarding a grant to a local public entity of a State, the Secretary will consult with the State health authority.

(b) Priorities for funding will be based on the following factors:

(1) The relative extent of the problems which are caused by one or more of the vaccine preventable diseases in the area served by the applicant.

(2) The extent to which the proposed program is designed to eliminate or reduce the problems.

(3) The extent to which the proposed program will increase the immunization rates in population groups identified as having the lowest immunity levels.

(4) The extent to which the grantee will cooperate with and use public and nonprofit private entities and volunteers.

(5) The extent to which a strong commitment to the objectives of the program is reflected in the commitment of grantee resources to the program.

[44 FR 40501, July 11, 1979, as amended at 48 FR 4475, Feb. 1, 1983]

§51b.206 How can grant funds be used?

Grant funds awarded under this subpart may be used to purchase supplies, materials, and equipment for childhood immunization programs. Grant funds also may be used to pay for salaries or wages and related expenses for personnel directly involved in the planning, organization, promotion, epidemiology, surveillance, and other program activities.

Subpart C [Reserved]

Subpart D—Grants for Venereal Disease Control Programs

SOURCE: 48 FR 4475, Feb. 1, 1983, unless otherwise noted.

§ 51b.401 To which programs does this subpart apply?

The regulations in this subpart apply to the award of project grants under section 318(c) of the Act for venereal disease prevention and control programs, and under section 318(b) of the Act with respect to public information and education activities which are integral to a balanced, comprehensive venereal disease control program.

§ 51b.402 Definitions.

As used in this subpart:

Venereal disease means gonorrhea, syphilis, or any other disease which can be sexually transmitted and which the Secretary determines is or may be amenable to control with assistance provided under this authority and which is of national significance.

Venereal disease control program means a program designed to carry out activities or to provide services to systematically detect and prevent venereal disease as distinguished from those activities or services which are designed to diagnose or treat venereal disease patients or suspects.

§ 51b.403 Who is eligible for a grant under this subpart?

An applicant must be a State agency or a political subdivision of a State which has legal responsibility for disease control under the laws of the State.

§ 51b.404 What are the confidentiality requirements?

All information obtained by program personnel in connection with the examination, care, and treatment of an individual in this program shall be held confidential. It shall not be disclosed without the individual's consent except as may be required by the law of a State or political subdivision of a State or as may be necessary to provide services to the individual. Information may be disclosed in summary, statistical, or other form, or for clinical or research purposes, but only if the disclosure does not identify particular individuals.

§ 51b.405 What information is required in the application?

(a) The initial application must include a description of the following:

(1) The nature and extent of the venereal disease problem in the area.

(2) The need for project grant support.

(3) The immediate (1-year budget period) and long-range (2–5 year project period) objectives of the project in specific and measurable terms.

(4) The activities to be carried out to meet the objectives. The following program elements must be included and described:

(i) Venereal disease surveillance.

(ii) Casefinding and case followup.

(iii) Interstate epidemiologic referral and followup.

(iv) Public venereal disease information and education.

(v) Professional (including appropriate allied health personnel) venereal disease education, training, and clinical skills improvement activities, including efforts to assure high quality clinical services in public venereal disease clinics.

(5) At the option of the applicant, special studies or demonstrations to evaluate or test venereal disease prevention and control strategies and activities.

(6) The manner in which the applicant intends to conduct and evaluate the project, including a system for analysis of morbidity data so that control activities can be efficiently evaluated and targeted.

(7) The diagnostic and treatment services that will be provided.

(8) A budget and justification for the grant funds requested. Since public information and education activities are authorized separately from other control program activities, funds requested for this purpose must be itemized and justified separately in the narrative part of the application.

(b) An application for a continuation grant must be submitted for each funding period. This continuation application must include the following:

(1) A budget and justification for the grant funds requested.

(2) A summary of the progress achieved during the previous budget period.

(3) A description of any changes in the information shown in the project application.

§51b.406 How will grant applications be evaluated and the grants awarded?

(a) Within the limits of funds available, the Secretary may award a grant to assist in meeting the cost of a venereal disease control program. Before awarding a grant to a political subdivision of a State, the Secretary will consult with the State health authority.

(b) Priorities for funding will be based on the following factors:

(1) The relative extent of the venereal disease problem in the area served by the applicant.

(2) The design of the venereal disease prevention and control program.

(3) The general quality of the applicant's plan of operation and objectives in accordance with the requirements in these regulations. Emphasis will be placed on determining the extent to which services are coordinated among health care providers in the area served and integrated into a cohesive plan for delivery of service to groups having the highest incidence of venereal disease.

(4) The capacity of the applicant to make effective use of Federal funds.

(5) The commitment of the applicant to the control of venereal disease as reflected in the commitment of applicant resources to the program.

§51b.407 How can grant funds be used?

Grant funds awarded under this subpart may be used only for programs approved under section 318(c), and with respect to public information and education, those programs approved under section 318(b) of the Act. Unless specifically approved, grant funds shall not be used for performing diagnostic tests (other than gonorrhea screening tests), maintaining central registries, purchasing data processing equipment, or providing diagnostic and treatment facilities and services. The applicant must provide assurances, however, that these services will be available as needed as an adjunct to control program activities supported with grant funds. To obtain special approval for grant support of such activities, the grantee shall justify the exception to the satisfaction of the Secretary that funds for this purpose are necessary for the proper conduct of the program and are otherwise unavailable. Support of these services will generally be approved only in the following situations:

(a) Special studies or demonstrations, (b) the support of developmental or start-up activity, or (c) the support of an essential service which will result in a savings to a detection or prevention activity supported by the grant. Unless otherwise approved, exceptions based on paragraphs (b) and (c) of this section are only allowed during one funding period. The grantee is expected to support these activities in subsequent funding periods.

Subpart E [Reserved]

Subpart F—Grants for Research, Demonstrations, and Public Information and Education for the Prevention and Control of Venereal Disease

SOURCE: 48 FR 4476, Feb. 1, 1983, unless otherwise noted.

§51b.601 To which programs does this subpart apply?

The regulations in this subpart apply to the award of venereal disease control project grants for research, demonstrations, public information, and education activities which can be applied to achieve improvements in venereal disease prevention and control under section 318(b) of the Act.

§51b.602 Who is eligible for a grant under this subpart?

An applicant must be a State, political subdivision of any State, or any other public or nonprofit private entity.

§ 51b.603 What are the confidentiality requirements?

All information obtained by program personnel in connection with the examination, care, and treatment of an individual in this program shall be held confidential. It shall not be disclosed without the individual's consent except as may be required by the law of a State, or political subdivision of a State, or as may be necessary to provide services to the individual. Information may be disclosed in summary, statistical, or other form, or for clinical or research purposes, but only if the disclosure does not identify particular individuals.

§ 51b.604 What information is required in the application?

(a) The initial application must include a description of the following:

(1) The setting and circumstances for which project grant support is being requested, including:

(i) The immediate and long-range objectives of the project in specific and measurable terms.

(ii) The activities which will be undertaken to accomplish the objectives, including the timing of these activities.

(iii) The anticipated application of findings to the national venereal disease control effort.

(iv) Any other information which will support the request for grant assistance.

(2) The relationship between the planned activities and the project objectives. The application must describe in detail how the applicant intends to proceed, particularly if the project is unusually complex and several activities are interdependent or unprecedented.

(3) A comprehensive and realistic plan which the applicant will use to evaluate the project. The plan must include periodic assessment of any possible impact, both positive and negative, that the proposed project might have upon the established venereal disease control program in the locality or localities in which the project will be undertaken.

(b) An application for a continuation grant must be submitted for each funding period. This continuation application must include the following:

(1) A budget and justification for the grant funds requested.

(2) A summary of the progress achieved during the previous budget period.

(3) A description of any changes in the information shown in the project application.

§ 51b.605 How will grant applications be evaluated and the grants awarded?

(a) Within the limits of funds available, the Secretary may award a grant to assist in meeting the costs of special activities authorized under section 318(b) of the Act.

(b) Grant applications will be reviewed and evaluated according to the following criteria:

(1) Is there adequate evidence that the proposed project is needed and that the outcome has potential to directly benefit the national venereal disease control effort?

(2) Are the project objectives specific, measurable, realistic, time phased, and related to promoting the purposes of section 318?

(3) Is the method of operation logical and clearly related to project objectives, and does it describe how the applicant intends to proceed particularly with activities which are complex, interrelated, or unprecedented?

(4) Does the method of operation include an assessment of any possible impact, both positive and negative, that the conduct of the proposed initiative might have upon the established venereal disease control program in the locality or localities in which the project will be undertaken?

(5) Does the proposal include a comprehensive and realistic plan for the evaluation of the project, and specify the measures and instruments of measurement to be used?

(6) Is the budget request reasonable and consistent with the intended use of grant funds?

(7) If the applicant intends only to evaluate an existing disease prevention and control approach, are the objectives substantially different from those which could be met by routine program evaluation?

§51b.606 How can grant funds be used?

(a) Grant funds may be used for the costs associated with planning, organizing, and conducting applied research, demonstrations, and public information and education programs.

(b) Grant funds may also be used to reimburse individuals who agree to be participants in the applied research projects. This reimbursement, however, must be justified as necessary and reasonable. A schedule of reimbursements must be submitted with the application and approved as part of the program plan.

(c) Grant funds may not be used to supplant funds supporting existing venereal disease control services provided by a State or locality.

PART 51c—GRANTS FOR COMMUNITY HEALTH SERVICES

Subpart A—General Provisions

Sec.
51c.101 Applicability.
51c.102 Definitions.
51c.103 Eligibility.
51c.104 Application.
51c.105 Accord with health planning.
51c.106 Amount of grant.
51c.107 Use of project funds.
51c.108 Grant payments.
51c.109 Nondiscrimination.
51c.110 Confidentiality.
51c.111 Publications and copyright.
51c.112 Grantee accountability.
51c.113 Applicability of 45 CFR part 74.

Subpart B—Grants for Planning and Developing Community Health Centers

51c.201 Applicability.
51c.202 Application.
51c.203 Project elements.
51c.204 Grant evaluation and award.

Subpart C—Grants for Operating Community Health Centers

51c.301 Applicability.
51c.302 Application.
51c.303 Project elements.
51c.304 Governing board.
51c.305 Grant evaluation and award.

Subpart D—Grants for Operating Community Health Projects

51c.401 Applicability.
51c.402 Application.
51c.403 Project elements.
51c.404 Grant evaluation and award.

Subpart E—Acquisition and Modernization of Existing Buildings

51c.501 Applicability.
51c.502 Definitions.
51c.503 Application.
51c.504 Project elements.
51c.505 Determination of cost.
51c.506 Use of grant funds.
51c.507 Facility which has previously received Federal grant.

AUTHORITY: Sec. 330, Public Health Service Act, 89 Stat. 342, (42 U.S.C. 254c); sec. 215, Public Health Service Act, 58 Stat. 690, (42 U.S.C. 216).

SOURCE: 41 FR 53205, Dec. 3, 1976, unless otherwise noted.

Subpart A—General Provisions

§51c.101 Applicability.

The regulations of this subpart are applicable to all project grants authorized by section 330 of the Public Health Service Act (42 U.S.C. 254c).

§51c.102 Definitions.

As used in this part:

(a) *Act* means the Public Health Service Act.

(b) *Catchment area* means the area served by a project funded under section 330 of the Act.

(c)(1) *Community health center* or *center* means an entity which, through its staff and supporting resources or through contracts or cooperative arrangements with other public or private entities, provides for all residents of its catchment area:

(i) Primary health services;

(ii) As determined by the Secretary to be appropriate for particular centers, supplemental health services necessary for the adequate support of primary health services;

(iii) Referral to providers of supplemental health services and payment, as determined by the Secretary to be appropriate and feasible, for their provision of such services;

(iv) Environmental health services, as determined by the Secretary to be appropriate for particular centers; and

(v) Information on the availability and proper use of health services.

(2) For purposes of paragraph (c)(1) of this section, the provision of a given

service by a center will be determined by the Secretary to be appropriate where:

(i) There is a need, as determined by the Secretary, for the provision of such service in the catchment area; and

(ii) The provision of such service by the center is feasible, taking into consideration the center's projected revenues, other resources, and grant support under this part.

(d) *Environmental health services* means the detection and alleviation of unhealthful conditions of the environment of the catchment area, such as problems associated with water supply, sewage treatment, solid waste disposal, rodent and parasite infestation, and housing conditions. For the purposes of this part, the detection and alleviation of unhealthful conditions of the environment includes the notification of and making of arrangements with appropriate Federal, State, or local authorities responsible for correcting such conditions.

(e) *Medically underserved population* means the population of an urban or rural area designated by the Secretary as an area with a shortage of personal health services or a population group designated by the Secretary as having a shortage of such services. Medically underserved areas will be designated by the Secretary and a list of those designated will be published in the FEDERAL REGISTER from time to time, taking into consideration the following factors, among others:

(1) Available health resources in relation to size of the area and its population, including appropriate ratios of primary care physicians in general or family practice, internal medicine, pediatrics, or obstetrics and gynecology to population;

(2) Health indices for the population of the area, such as infant mortality rate;

(3) Economic factors affecting the population's access to health services, such as percentage of the population with incomes below the poverty level; and

(4) Demographic factors affecting the population's need and demand for health services, such as percentage of the population age 65 and over.

(f) *Nonprofit*, as applied to any private agency, institution, or organization, means one which is a corporation or association, or is owned and operated by one or more corporations or associations, no part of the net earnings of which inures, or may lawfully inure, to the benefit of any private shareholder or individual.

(g) *Physician* means a licensed doctor of medicine or doctor of osteopathy.

(h) *Primary health services* means:

(1) Diagnostic, treatment, consultative, referral, and other services rendered by physicians, and, where feasible, by physician's extenders, such as physicians' assistants, nurse clinicians, and nurse practitioners;

(2) Diagnostic laboratory services and diagnostic radiologic services;

(3) Preventive health services, including medical social services, nutritional assessment and referral, preventive health education, children's eye and ear examinations, prenatal and post-partum care, prenatal services, well child care (including periodic screening), immunizations, and voluntary family planning services;

(4) Emergency medical services, including provision, through clearly defined arrangements, for access of users of the center to health care for medical emergencies during and after the center's regularly scheduled hours;

(5) Transportation services as needed for adequate patient care, sufficient so that residents of the catchment area served by the center with special difficulties of access to services provided by the center receive such services; and

(6) Preventive dental services provided by a licensed dentist or other qualified personnel, including (i) oral hygiene instruction; (ii) oral prophylaxis, as necessary; and (iii) topical application of fluorides, and the prescription of fluorides for systemic use when not available in the community water supply.

(i) *Secretary* means the Secretary of Health and Human Services and any other officer or employee of the Department of Health and Human Services to whom the authority involved has been delegated.

(j) *Supplemental health services* means health services which are not included

as primary health services and which are:

(1) Inpatient and outpatient hospital services;

(2) Home health services;

(3) Extended care facility services;

(4) Rehabilitative services (including physical and occupational therapy) and long-term physical medicine;

(5) Mental health services, including services of psychiatrists, psychologists, and other appropriate mental health professionals;

(6) Dental services other than those provided as primary health services;

(7) Vision services, including routine eye and vision examinations and provision of eyeglasses, as appropriate and feasible;

(8) Allied health services;

(9) Pharmaceutical services, including the provision of prescription drugs;

(10) Therapeutic radiologic services;

(11) Public health services (including nutrition education and social services);

(12) Ambulatory surgical services;

(13) Health education services; and

(14) Services, including the services of outreach workers, which promote and facilitate optimal use of primary health services and services referred to in the preceding subparagraphs of this paragraph and, if a substantial number of individuals in the population served by the center are of limited English-speaking ability, the services of outreach workers and other personnel fluent in the language or languages spoken by such individuals.

§51c.103 Eligibility.

Any public or nonprofit private entity is eligible to apply for a grant under this part.

§51c.104 Application.

(a) An application for a grant under this part shall be submitted to the Secretary at such time and in such form and manner as the Secretary may prescribe.

(b) The application shall contain a budget and narrative plan of the manner in which the applicant intends to conduct the project and carry out the requirements of this part. The application must describe how and the extent to which the project has met, or plans to meet, each of the requirements in subpart B (relating to grants for planning and developing community health centers), subpart C (relating to grants for the operation of community health centers), or subpart D (relating to grants for the operation of community health projects), as applicable. In addition, applications must include:

(1) A statement of specific, measurable objectives and the methods to be used to assess the achievement of the objectives in specified time periods and at least on an annual basis.

(2) The precise boundaries of the catchment area to be served by the applicant, including an identification of the medically underserved population or populations within the catchment area. In addition, the application shall include information sufficient to enable the Secretary to determine that the applicant's catchment area meets the following criteria:

(i) The size of such area is such that the services to be provided by the applicant are available and accessible to the residents of the area promptly and as appropriate;

(ii) The boundaries of such area conform, to the extent practicable, to relevant boundaries of political subdivisions, school districts, and areas served by Federal and State health and social service programs; and

(iii) The boundaries of such area eliminate, to the extent possible, barriers resulting from the area's physical characteristics, its residential patterns, its economic and social groupings, and available transportation.

(3) The results of an assessment of the need that the population served or proposed to be served has for the services to be provided by the project (or in the case of applications for planning and development projects, the methods to be used in assessing such need), utilizing, but not limited to, the factors set forth in §51c.102(e)(1)–(4).

(4) Position descriptions for key personnel who will be utilized in carrying out the activities of the project and a statement indicating the need for the positions to be supported with grant funds to accomplish the objectives of the project.

(5) Letters and other forms of evidence showing that efforts have been made to secure financial and professional assistance and support for the project within the proposed catchment area and the continuing involvement of the community in the development and operation of the project.

(6) An assurance that an independent certified public accountant, or a public accountant licensed before December 31, 1970, will be engaged to certify that the system for the management and control of its financial assets will be in accord with sound financial management practices, including applicable Federal requirements.

(7) A list of all services proposed to be provided by the project.

(8) A list of services which are to be provided directly by the project through its own staff and resources and a description of any contractual or other arrangements (including copies of documents, where available) entered into, or planned for the provision of services.

(9) The schedule of fees and/or payments and schedule of discounts for services provided by the project.

(10) Evidence that all applicable requirements for review and/or approval of the application under title XV of the Act have been met.

(11) An assurance that the project will be conducted in accordance with the applicable requirements of this part.

(c) The application must be executed by an individual authorized to act for the applicant and to assume on behalf of the applicant the obligations imposed by the statute, the applicable regulations of this part, and any additional conditions of the grant.

(Sec. 330, Public Health Service Act, 89 Stat. 342, (42 U.S.C. 254c); sec. 215, Public Health Service Act, 58 Stat. 690, 67 Stat. 63 (42 U.S.C. 216))

[41 FR 53205, Dec. 3, 1976, as amended at 48 FR 29201, June 24, 1983; 48 FR 45558, Oct. 6, 1983]

§ 51c.105 Accord with health planning.

A grant may be made under this part only if the applicable requirements of title XV of the Act relating to review and approval by the appropriate health planning agencies have been met.

§ 51c.106 Amount of grant.

(a) The amount of any award under this part will be determined by the Secretary on the basis of his estimate of the sum necessary for a designated portion of direct project costs plus an additional amount for indirect costs, if any, which will be calculated by the Secretary either:

(1) On the basis of the estimate of the actual indirect costs reasonably related to the project; or

(2) On the basis of a percentage of all, or a portion of, the estimated direct costs of the project when there are reasonable assurances that the use of such percentage will not exceed the approximate actual indirect costs. Such award may include an estimated provisional amount for indirect costs or for designated direct costs (such as fringe benefit rates) subject to upward (within the limits of available funds) as well as downward adjustments to actual costs when the amount properly expended by the grantee for provisional items has been determined by the Secretary: *Provided, however,* That no grant shall be made for an amount in excess of the total cost found necessary by the Secretary to carry out the project.

(i) In determining the percentage of project costs to be borne by the grantee, factors which the Secretary will take into consideration will include the following:

(A) The ability of the grantee to finance its share of project costs from non-Federal sources;

(B) The need in the area served by the project for the services to be provided; and

(C) The extent to which the project will provide services in an innovative manner which the Secretary desires to stimulate in the interest of developing more effective health service delivery systems on a regional or national basis.

(ii) At any time after approval of an application under this part, the Secretary may retroactively agree to a percentage of project costs to be borne by the grantee lower than that determined pursuant to paragraph (a)(2)(i) of this section where he finds that changed circumstances justify a smaller contribution.

(iii) In determining the grantee's share of project costs, costs borne by Federal grant funds, or costs used to match other Federal grants, may not be included except as otherwise provided by law or regulations.

(b) All grant awards shall be in writing, and shall set forth the amount of funds granted and the period for which support is recommended.

(c) Neither the approval of any project nor any grant award shall commit or obligate the United States in any way to make any additional, supplemental, continuation, or other award with respect to any approved project or portion thereof. For continuation support, grantees must make separate application.

§51c.107 Use of project funds.

(a) Any funds granted pursuant to this part, as well as other funds to be used in performance of the approved project, may be expended solely for carrying out the approved project in accordance with section 330 of the Act, the applicable regulations of this part, the terms and conditions of the award, and the applicable cost principles prescribed in subpart Q of 45 CFR part 74.

(b) Project funds awarded under this part may be used for, but need not be limited to, the following:

(1) The costs of acquiring and modernizing existing buildings (including the costs of amortizing the principal of, and paying interest on, loans), but only in accordance with subpart E of this part and as approved in the grant award;

(2) The costs of obtaining technical assistance to develop and improve the management capability of the project, but only as approved by the Secretary;

(3) The reimbursement of members of the grantee's governing board, if any, for reasonable expenses actually incurred by reason of their participation in board activities;

(4) The reimbursement of governing board members for wages lost by reason of participation in the activities of such board if the member is from a family with an annual family income below $10,000 or if the member is a single person with an annual income below $7,000;

(5) The cost of delivering health services, including services rendered on a prepaid capitation basis, to residents of the project's catchment area within the following limitations: grant funds may be used to pay the full cost of project services to individuals and families with annual incomes at or below those set forth in the most recent ''CSA Income Poverty Guidelines'' (45 CFR 1060.2) issued by the Community Services Administration; and to pay the portion of the cost of services provided in accordance with the schedule of discounts which, under such schedule, is uncompensated; *Provided,* That (i) charges will be made to such individuals and families in accordance with §51c.303(f) of subpart C; (ii) reasonable effort shall be made to collect such charges under a billing and collections system; and (iii) the charge to grant funds shall exclude any amounts collected pursuant to paragraph (b)(5)(ii) of this section;

(6) The cost of insurance for medical emergency and out-of-area coverage;

(7) The cost of providing to the staff of the project training related to the provision of health services provided or to be provided by the project, and, to the staff and governing board, if any, training related to the management of an ambulatory care facility, consistent with the applicable requirements of 45 CFR part 74; and

(8) The cost of developing and maintaining a reserve fund where required by State law for prepaid health care plans.

(c) Prior approval by the Secretary of revisions of the budget and project plan is required whenever there is to be a significant change in the scope or nature of project activities.

§51c.108 Grant payments.

The Secretary shall from time to time make payments to a grantee of all or a portion of any grant award, either in advance or by way of reimbursement for expenses incurred or to be incurred, to the extent he determines such payments necessary to promote prompt initiation and advancement of the approved project.

§ 51c.109 Nondiscrimination.

(a) Attention is called to the requirements of title VI of the Civil Rights Act of 1964 (78 Stat. 252, (42 U.S.C. 2000d *et seq.*)) and in particular section 601 of such Act which provides that no person in the United States shall on the grounds of race, color, or national origin be excluded from participation, in be denied the benefits of, or be subjected to discrimination under any program or activity receiving Federal Financial assistance. A regulation implementing such title VI, which applies to grants made under this part, has been issued by the Secretary of Health and Human Services with the approval of the President (45 CFR part 80). In addition, no person shall, on the grounds of age, sex, creed, or marital status (unless otherwise medically indicated), be excluded from participation in, be denied the benefits of, or be subjected to discrimination under any program or activity so receiving Federal financial assistance.

(b) Attention is called to the requirements of section 504 of the Rehabilitation Act of 1973, as amended, which provides that no otherwise qualified handicapped individual in the United States shall, solely by reason of his handicap, be excluded from participation in, be denied the benefits of, or be subjected to discrimination under any program or activity receiving Federal financial assistance.

§ 51c.110 Confidentiality.

All information as to personal facts and circumstances obtained by the project staff about recipients of services shall be held confidential, and shall not be divulged without the individual's consent except as may be required by law or as may be necessary to provide service to the individual or to provide for medical audits by the Secretary or his designee with appropriate safeguards for confidentiality of patient records. Otherwise, information may be disclosed only in summary, statistical, or other form which does not identify particular individuals.

§ 51c.111 Publications and copyright.

Except as may otherwise be provided under the terms and conditions of the award, the grantee may copyright without prior approval any publications, films, or similar materials developed or resulting from a project supported by a grant under this part, subject, however, to a royalty-free, nonexclusive, and irrevocable license or right in the Government to reproduce, translate, publish, use, disseminate, and dispose of such materials and to authorize others to do so.

§ 51c.112 Grantee accountability.

(a) *Accounting for grant award payments.* All payments made by the Secretary shall be recorded by the grantee in accounting records separate from the records of all other funds, including funds derived from other grant awards. With respect to each approved project, the grantee shall account for the sum total of all amounts paid as well as other funds and in-kind contributions by presenting or otherwise making available evidence satisfactory to the Secretary of expenditure for direct and indirect costs meeting the requirements of this part: *Provided, however,* That when the amount awarded for indirect costs was based on a predetermined fixed-percentage of estimated direct costs, the amount allowed for indirect costs shall be computed on the basis of such predetermined fixed-percentage rates applied to the total, or a selected element thereof, of the reimbursable direct costs incurred.

(b) *Accounting for interest earned on grant funds.* Pursuant to section 203 of the Intergovernmental Cooperation Act of 1968 (42 U.S.C. 4213), a State will not be held accountable for interest earned on grant funds, pending their disbursement for grant purposes. A State, as defined in section 102 of the Intergovernmental Cooperation Act, means any one of the several States, the District of Columbia, Puerto Rico, any territory or possession of the United States, or any agency or instrumentality of a State, but does not include the government of the political subdivisions of the State. All grantees other than a State, as defined, must return all interest earned on grant funds to the Federal Government.

(c) *Grant closeout*—(1) *Date of final accounting.* A grantee shall render, with respect to each approved project, a full

account, as provided herein, as of the date of the termination of grant support. The Secretary may require other special and periodic accounting.

(2) *Final settlement*. There shall be payable to the Federal Government as final settlement with respect to each approved project the total sum of:

(i) Any amount not accounted for pursuant to paragraph (a) of this section;

(ii) Any credits for earned interest pursuant to paragraph (b) of this section;

(iii) Any other amounts due pursuant to subparts F, M, and O of 45 CFR part 74.

§51c.113 Applicability of 45 CFR part 74.

The provisions of 45 CFR part 74, establishing uniform administrative requirements and cost principles, shall apply to all grants under this part to State and local governments as those terms are defined in subpart A of that part 74. The relevant provisions of the following subparts of part 74 shall also apply to grants to all other grantee organizations under this part:

45 CFR PART 74

Subpart
A General.
B Cash depositories.
C Bonding and insurance.
D Retention and custodial requirements for records.
F Grant-related income.
G Matching and cost sharing.
K Grant payment requirements.
L Budget revision procedures.
M Grant closeout, suspension, and termination.
O Property.
Q Cost principles.

Subpart B—Grants for Planning and Developing Community Health Centers

§51c.201 Applicability.

The regulations of this subpart, in addition to the regulations of subpart A of this part, are applicable to grants awarded pursuant to section 330(c) of the Act for projects for planning and developing community health centers which will serve medically underserved populations.

§51c.202 Application.

To be approved by the Secretary under this subpart, an application for a grant must, in addition to meeting the requirements of §51c.104 of subpart A, contain information sufficient to enable the Secretary to determine that the project for which the grant is sought will meet the requirements of §51c.203.

§51c.203 Project elements.

A project for the planning and developing of a community health center supported under this subpart must:

(a) Prepare an assessment of the need of the population proposed to be served by the community health center for the services set forth in §51c.102(c)(1) of subpart A, with special attention to the need of the medically underserved population for such services. Such assessment of need shall, at a minimum, consider the factors listed in §51c.102(e)(1)–(4).

(b) Design a community health center program for such population, based on such assessment, which indicates in detail how the proposed community health center will fulfill the needs identified in the assessment prepared pursuant to paragraph (a) of this section and how it will meet the requirements contained in subpart C of this part.

(c) Develop a plan for the implementation of the program designed pursuant to paragraph (b) of this section. Such implementation plan shall provide for the time-phased recruitment and training of the personnel essential for the operation of a community health center and the gradual assumption of operational status of the project so that the project will, in the judgment of the Secretary, meet the requirements contained in subpart C of this part as of the end of the project period.

(d) Implement the plan developed pursuant to paragraph (c) of this section in accordance with such paragraph.

(e) Make efforts to secure, within the proposed catchment area of such center to the extent possible, financial and professional assistance and support for the project.

(f) Initiate and encourage continuing community involvement in the development and operation of the project.

(g) Establish standards and qualifications for personnel (including the project director).

(h) Utilize, to the maximum extent feasible, other Federal, State, local, and private resources available for support of the project, prior to use of project funds under this subpart.

§ 51c.204 Grant evaluation and award.

(a) Within the limits of funds determined by the Secretary to be available for such purpose, the Secretary may award grants under this subpart to applicants therefor which will, in his judgment, best promote the purposes of section 330(c) of the Act and the applicable regulations of this part, taking into account:

(1) The degree to which the proposed project satisfactorily provides for the elements set forth in § 51c.203;

(2) The relative need of the population to be served for the services to be provided;

(3) The administrative and management capability of the applicant;

(4) The potential of the project for development of new and effective methods for health services delivery and management;

(5) The soundness of the fiscal plan for assuring effective utilization of grant funds and maximizing non-grant revenue;

(6) The extent to which community resources will be utilized in the project;

(7) The extent to which grants approved under this part will provide for an appropriate distribution of resources throughout the country, taking into consideration the following factors;

(i) The urban-rural area to be served;

(ii) The nature of the organization applying; and

(iii) The organizational structure for delivery of services;

(8) Whether the project's catchment area is exclusive of the area served by a community health center;

(9) The degree to which the applicant intends to integrate services supported by a grant under this subpart with health services provided under other Federally assisted health services or reimbursement programs or projects.

(b) The Secretary may:

(1) Make no more than two grants under this subpart for the same project.

(2) Make a grant under this subpart to an entity which has been awarded one or more grants under section 330(d)(1)(A) and/or section 330(d)(1)(B) of the Act only if the grant under this subpart is for a new project.

Subpart C—Grants for Operating Community Health Centers

§ 51c.301 Applicability.

The regulations of this subpart, in addition to the regulations of subpart A, are applicable to grants awarded pursuant to section 330(d)(1)(A) of the Act for the costs of operation of community health centers which serve medically underserved populations.

§ 51c.302 Application.

To be approved by the Secretary under this subpart, an application for a grant must, in addition to meeting the requirements of § 51c.104 of subpart A,

(a) Be submitted by an entity which may be a co-applicant which the Secretary determines is a community health center, and

(b) Contain information sufficient to enable the Secretary to determine that the center will meet the requirements of § 51c.103.

[41 FR 53205, Dec. 3, 1976, as amended at 42 FR 60418, Nov. 25, 1977]

§ 51c.303 Project elements.

A community health center supported under this subpart must:

(a) Provide the health services of the center so that such services are available and accessible promptly, as appropriate, and in a manner which will assure continuity of service to the residents of the center's catchment area.

(b) Implement a system for maintaining the confidentiality of patient records in accordance with the requirements of § 51c.110 of subpart A.

(c) Have an ongoing quality assurance program which provides for the following:

(1) Organizational arrangements, including a focus of responsibility, to support the quality assurance program and the provision of high quality patient care;

(2) Periodic assessment of the appropriateness of the utilization of services and the quality of services provided or proposed to be provided to individuals served by the center. Such assessments shall:

(i) Be conducted by physicians or by other licensed health professionals under the supervision of physicians;

(ii) Be based on the systematic collection and evaluation of patient records; and

(iii) Identify and document the necessity for change in the provision of services by the center and result in the institution of such change, where indicated.

(d) Develop management and control systems which are in accordance with sound financial management procedures, including the provision for an audit on an annual basis (unless waived for cause by the Secretary) by an independent certified public accountant or a public accountant licensed prior to December 31, 1970, to determine, at a minimum, the fiscal integrity of grant financial transactions and reports, and compliance with the regulations of this part and the terms and conditions of the grant.

(e) Where the cost of care and services furnished by or through the project is to be reimbursed under title XIX or title XX of the Social Security Act, obtain or make every reasonable effort to obtain a written agreement with the title XIX or title XX State agency for such reimbursement.

(f) Have prepared a schedule of fees or payments for the provision of its services designed to cover its reasonable costs of operation and a corresponding schedule of discounts adjusted on the basis of the patient's ability to pay. *Provided*, That such schedule of discounts shall provide for a full discount to individuals and families with annual incomes at or below those set forth in the most recent CSA Proverty Income Guidelines (45 CFR 1060.2) and for no discount to individuals and families with annual incomes greater than twice those set forth in such Guidelines, except that nominal fees for services may be collected from individuals with annual incomes at or below such levels where imposition of such fees is consistent with project goals.

(g) Make every reasonable effort, including the establishment of systems for eligibility determination, billing, and collection, to:

(1) Collect reimbursement for its costs in providing health services to persons who are entitled to insurance benefits under title XVIII of the Social Security Act, to medical assistance under a State plan approved under title XIX of such Act, to social services and family planning under title XX of such Act, or to assistance for medical expenses under any other public assistance program, grant program, or private health insurance or benefit program on the basis of the schedule of fees prepared pursuant to paragraph (f) of this section without application of any discounts, and

(2) Secure from patients payments for services in accordance with the schedule of fees and discounts required by paragraph (f) of this section.

(h) Have a governing board which meets the requirements of §51c.304.

(i) Have developed an overall plan and budget for the center that:

(1) Provides for an annual operating budget and a three-year financial management plan which include all anticipated income and expenses related to items which would, under generally accepted accounting principles, be considered income and expense items;

(2) Provides for a capital expenditures plan for at least a three-year period (including the year to which the operating budget described in paragraph (i)(1) of this section is applicable) which includes and identifies in detail the anticipated sources of financing for, and the objective of, each anticipated expenditure in excess of $100,000 related to the acquisition of land, the improvement of land, buildings, and equipment and the replacement, modernization and expansion of buildings and equipment which would, under generally accepted accounting principles, be considered capital items;

(3) Provides for plan review and updating at least annually; and

(4) Is prepared under the direction of the governing board, by a committee consisting of representatives of the governing board, and administrative staff, and the medical staff, if any, of the center.

(j) Establish basic statistical data, cost accounting, management information, and reporting or monitoring systems which shall enable the center to provide such statistics and other information as the Secretary may reasonably require relating to the center's costs of operation, patterns of utilization of services, and the availability, accessibility, and acceptability of its services and to make such reports to the Secretary in a timely manner with such frequency as the Secretary may reasonably require.

(k) Review its catchment area annually to insure that the criteria set out in § 51c.104(b)(2) of subpart A are met and, where such criteria are not met, revise its catchment area, with the approval of the Secretary, to conform to such criteria to the extent feasible.

(l) In the case of a center which serves a population including a substantial proportion of individuals of limited English-speaking ability, have developed a plan and made arrangements responsive to the needs of such populations for providing services to the extent practicable in the language and cultural context most appropriate to such individuals, and have identified an individual on its staff who is fluent in both that language and in English and whose responsibilities include providing guidance to such individuals and to appropriate staff members with respect to cultural sensitivities and bridging linguistic and cultural differences. If more than one non-English language is spoken by such group or groups, an individual or individuals fluent in those languages and English shall be so identified.

(m) Be operated in a manner calculated to preserve human dignity and to maximize acceptability and effective utilization of services.

(n) To the extent possible, coordinate and integrate project activities with the activities of other Federally funded, as well as State and local, health services delivery projects and programs serving the same population.

(o) Establish means for evaluating progress toward the achievement of the specific objectives of the project.

(p) Provide sufficient staff, qualified by training and experience, to carry out the activities of the center.

(q) Assure that facilities utilized in the performance of the project meet applicable fire and life safety codes.

(r) Utilize, to the maximum extent feasible, other Federal, State, and local, and private resources available for support of the project, prior to use of project funds under this part.

(s) Provide for community participation through, for example, contributions of cash or services, loans of full- or part-time staff, equipment, space, materials, or facilities.

(t) Where the center will provide services through contract or other cooperative arrangements with other providers of services, establish rates and methods of payment for health care. Such payments must be made pursuant to agreements, with a schedule of rates and payment procedures maintained by the project. The project must be prepared to substantiate that such rates are reasonable and necessary.

(u) Operate in a manner such that no person shall be denied service by reason of his inability to pay therefor: *Provided, however,* That a charge for the provision of services will be made to the extent that a third party (including a Government agency) is authorized or is under legal obligation to pay such charges.

(v) In addition to the above, projects which are supported with grant funds for the operation of a prepaid health care plan also must provide:

(1) A marketing and enrollment plan, including market analysis, marketing strategy, and enrollment growth projections.

(2) A plan that provides for funding on a capitation basis of such portion of the residents of the catchment area of the center, as the Secretary shall determine.

(3) An assurance that services shall be available to all residents of the catchment area without regard to method of payment or health status.

§51c.304 Governing board.

A governing board for the center shall be established by an applicant as follows:

(a) *Size*. The board shall consist of at least 9 but not more than 25 members, except that this requirement may be waived by the Secretary for good cause shown.

(b) *Composition*. (1) A majority of the board members shall be individuals who are or will be served by the center and who, as a group, represent the individuals being or to be served in terms of demographic factors, such as race, ethnicity, sex.

(2) No more than one-half of the remaining members of the board may be individuals who derive more than 10 percent of their annual income from the health care industry.

(3) The remaining members of the board shall be representative of the community in which the center's catchment area is located and shall be selected for their expertise in community affairs, local government, finance and banking, legal affairs, trade unions, and other commercial and industrial concerns, or social service agencies within the community.

(4) No member of the board shall be an employee of the center, or spouse or child, parent, brother or sister by blood or marriage of such an employee. The project director may be a non-voting, ex-officio member of the board.

(c) *Selection of members*. The method of selection of all governing board members shall be prescribed in the by-laws or other internal governing rules of the center. Such by-laws or other rules must specify a process of selection of individuals on the governing board who represent the population served or to be served by the center so that such individuals, as a group, are representative of such population. Such process of selection in the by-laws or other rules is subject to approval by the Secretary.

(d) *Functions and responsibilities*. (1) The governing board for the center shall have authority for the establishment of policy in the conduct of the center.

(2) The governing board shall hold regularly scheduled meetings, at least once each month, for which minutes shall be kept.

(3) The governing board shall have specific responsibility for:

(i) Approval for the selection and dismissal of a project director or chief executive officer of the center;

(ii) Establishing personnel policies and procedures, including selection and dismissal procedures, salary and benefit scales, employee grievance procedures, and equal opportunity practices;

(iii) Adopting policy for financial management practices, including a system to assure accountability for center resources, approval of the annual project budget, center priorities, eligibility for services including criteria for partial payment schedules, and long-range financial planning;

(iv) Evaluating center activities including services utilization patterns, productivity of the center, patient satisfaction, achievement of project objectives, and development of a process for hearing and resolving patient grievances;

(v) Assuring that the center is operated in compliance with applicable Federal, State, and local laws and regulations; and

(vi) Adopting health care policies including scope and availability of services, location and hours of services, and quality-of-care audit procedures.

§51c.305 Grant evaluation and award.

Within the limits of funds determined by the Secretary to be available for such purpose, the Secretary may award grants under this subpart to applicants therefor which will, in his judgment, best promote the purposes of section 330(d)(1)(A) of the Act and the applicable regulations of this part, taking into consideration;

(a) The extent to which the project would provide for the elements set forth in §51c.303;

(b) The relative need of the population to be served for the services to be provided;

(c) The potential of the center for the development of new and effective methods for health services delivery and management;

(d) The soundness of the fiscal plan for assuring effective utilization of

grant funds and maximizing non-grant revenue;

(e) The administrative and management capability of the applicant;

(f) The extent to which grants approved under this part will provide for an appropriate distribution of resources throughout the country, taking into consideration the following factors:

(1) The urban-rural area to be served;

(2) The nature of the organization applying;

(3) The organizational structure for delivery of services;

(g) The number of users of the center and the level of utilization of services in previous operational periods, if any;

(h) Whether the center's catchment area is exclusive of the area served by another center;

(i) The degree to which the applicant intends to integrate services supported by a grant under this subpart with health services provided under other Federally assisted health services or reimbursement programs or projects;

(j) The extent to which community resources will be utilized by the project;

(k) The extent to which the center will provide preventive health services so as to maintain and improve the health status of the population served; and

(l) The extent to which center operations will emphasize direct health services, efficiency of operations and sound financial management.

Subpart D—Grants for Operating Community Health Projects

§ 51c.401 Applicability.

The regulations of this subpart, in addition to the regulations of subpart A are applicable to grants awarded pursuant to section 330(d)(1)(B) of the Act for the costs of operation of projects which provide health services to medically underserved populations.

§ 51c.402 Application.

To be approved by the Secretary under this subpart, an application for a grant must, in addition to meeting the requirements of § 51c.104 of subpart A, contain information sufficient to enable the Secretary to determine that the project for which the grant is sought will meet the requirements of § 51c.403 of this subpart.

§ 51c.403 Project elements.

A project for the operation of a community health project supported under this subpart must:

(a) Meet all of the requirements of § 51c.303 of this part except for paragraph (h).

(b) Provide those services enumerated in § 51c.102(c)(1) of this part which the Secretary determines to be feasible and desirable and which are specified in the grant award.

(c) Establish a governing board meeting the requirements of § 51c.304 by the end of the period of support under section 330(d)(1)(B) of the Act and this subpart.

§ 51c.404 Grant evaluation and award.

(a) Within the limits of funds determined by the Secretary to be available for such purpose, the Secretary may award grants under this subpart to applicants therefor which will, in his judgment, best promote the purposes of section 330(d)(1)(B) of the Act and the applicable regulations of this part,

(1) Where the project meets the requirements of § 51c.403(a); and

(2) Taking into consideration the following:

(i) The degree to which the project would provide the services enumerated in § 51c.102(c)(1) and the feasibility of its providing all of such enumerated services by the end of the period of support under section 330(d)(1)(B) of the Act and this subpart;

(ii) Whether the project will have a governing board meeting the requirements of § 51c.304 by the end of the period of support under section 330(d)(1)(B) of the Act and this subpart;

(iii) The degree to which the applicant intends to integrate services supported by a grant under this subpart with health services provided under other Federally assisted health service or reimbursement programs or projects;

(iv) The need of the population to be served for the services to be provided;

(v) The potential of the project for the development of new and effective

methods for health services delivery and management;

(vi) The soundness of the fiscal plan for assuring effective utilization of grant funds and maximizing non-grant revenue;

(vii) The administrative and management capacity of the applicant; and

(viii) The extent to which community resources will be utilized in the project.

(b) The Secretary may:

(1) Make no more than two grants for the same entity under section 330(d)(1)(B) of the Act;

(2) Not make any grant under section 330(d)(1)(B) to an entity which, for the same project, has been awarded more than one grant under section 330(c) of the Act;

(3) Not make a grant under section 330(d)(1)(B) to an entity which has been awarded a grant under section 330(d)(1)(A) of the Act.

Subpart E—Acquisition and Modernization of Existing Buildings

§51c.501 Applicability.

The regulations of this subpart, in addition to the regulations of the other applicable subparts of this part, are applicable to grants under section 330 of the Act for project costs which include the cost of acquisition and/or modernization of existing buildings (including the cost of amortizing the principal of, and paying the interest on, loans), except that, these regulations are not applicable to grants for project costs which include the costs of modernization of existing buildings if those costs can otherwise be supported under subparts B, C, or D of this part.

[43 FR 5352, Feb. 7, 1978]

§51c.502 Definitions.

(a) *Equipment* means nonexpendable personal property as defined in 45 CFR 74.132.

(b) *Existing building* means a completed or substantially completed structure, and may include the realty on which it is or is to be located.

(c) *Modernization* means the alteration, repair, remodeling and/or renovation of a building (including the initial equipment thereof and improvements to the building's site) which, when completed, will render the building suitable for use by the project for which the grant is made.

[43 FR 5352, Feb. 7, 1978]

§51c.503 Application.

(a) *General requirements*. An application for a grant under this part for a project under subparts B, C, or D which includes the acquisition and/or modernization of an existing building must include the following:

(1) A legal description of the site and a drawing showing the location of the building;

(2) A description of the architectural, structural, and other pertinent characteristics of the building sufficient to show that it is or that it will be, after alteration and renovation or after modernization, suitable for use by the project;

(3) A detailed estimate of the cost of the proposed acquisition and/or modernization;

(4) A description of, and copies of any relevant documents concerning, any existing or proposed financing arrangements for the acquisition and/or modernization;

(5) The proposed schedule for acquisition and/or modernization and occupancy;

(6) An assessment of the environmental impact of the proposed acquisition and/or modernization as called for by section 102(2)(c) of the National Environmental Policy Act of 1969 (42 U.S.C. 4332(c)) and such information as may be necessary to comply with the National Historic Preservation Act of 1966 (16 U.S.C. 470(f));

(7) Reasonable assurances that—

(i) The applicant has or will obtain a fee simple or such other estate or interest in the site, including necessary easements and rights-of-way, sufficient to assure for a period of not less than 20 years (in the case of interim facilities, for the period constituting the estimated useful life of such facilities) undisturbed use and possession for the purpose of the operation of the project;

(ii) The building will be used for the purposes for which the grant is made;

(iii) The building complies, or after alteration and renovation or after modernization will comply, with applicable State and local codes and with:

(A) ''American National Standard Specifications for Making Buildings and Facilities Accessible to, and Usable by, the Physically Handicapped'' Number ANSI A117.1–1961 (R 1971), as modified by other standards prescribed by the Secretary or the Administrator of the General Services Administration. The applicant shall be responsible for conducting inspections to insure compliance with the specifications;

(B) The applicable standards set forth in Life Safety Code 1973, NFPA No. 101, which is hereby incorporated by reference and made a part hereof. Copies of such document are available for examination at the Department's and Regional Offices' Information Centers listed in 45 CFR 5.31 and may also be obtained from the National Fire Protection Association, 470 Atlantic Avenue, Boston, MA 02210 for $3.00 per copy.

(iv) In the case of a public applicant with an approved project which involves the displacement of persons or businesses on or after January 2, 1971, whose real property has or will be taken, the applicant will comply with the provisions of the Uniform Relocation Assistance and Real Property Acquisition Policies Act of 1970 (Pub. L. 91–646) and the applicable regulations issued thereunder (45 CFR part 15);

(v) Sufficient funds will be available to meet any portion of the cost of acquiring and/or modernizing the building not borne by the grant under this part;

(vi) Sufficient funds will be available after acquisition and/or modernization of the building for effective use of the building for the purposes of the project;

(vii) The applicable requirements of the Flood Disaster Protection Act of 1973 have been met;

(8) Such other information as the Secretary may reasonably require.

(b) *Requirement for acquisition grants.* Except for a grant solely for amortization of principal and payment of interest on an existing loan, an application for a grant for a project which includes the acquisition of an existing building must include, in addition to the requirements of paragraph (a) of this section, evidence satisfactory to the Secretary that the applicant has explored other alternatives to the proposed acquisition (such as leasing facilities or acquiring other facilities in the project's catchment area) and that the proposed acquisition constitutes the soundest alternative from a financial and program standpoint.

(c) *Requirements for modernization grants.* In addition to the requirements of paragraph (a) of this section, an application for a grant for a project which includes modernization of an existing building must include the following:

(1) Plans and specifications for the proposed modernization which conform to the standards specified in § 51c.503(a)(7)(iii);

(2) Reasonable assurance that any laborer or mechanic employed by any contractor or subcontractor in the performance of work on the modernization project will be paid wages at rates not less than those prevailing on similar work in the locality as determined by the Secretary of Labor under the Davis-Bacon Act (40 U.S.C. 276a *et seq.*) and will receive compensation at a rate not less than one and one-half times his basic rate of pay for all hours worked in any workweek in excess of 8 hours in any calendar day; and

(3) Copies of any construction and materials contracts already entered into for the proposed modernization.

[41 FR 57000, Dec. 30, 1976, as amended at 43 FR 5352, Feb. 7, 1978]

§ 51c.504 Project elements.

(a) *General requirements.* A grantee which has received a grant under section 330 of the Act for a project which includes the acquisition and/or modernization of an existing building must:

(1) *Assurances.* Comply with the assurances provided pursuant to this subpart.

(2) *Approval of estimated cost.* Not enter into any contract for the acquisition and/or modernization funded under this subpart where the cost of such acquisition and/or modernization exceeds the estimates in the application, without the prior approval of the Secretary.

(3) *Non-default.* Make every effort to prevent any default on any loan secured by the building and, in the event of a default, promptly notify the Secretary of the default and make every effort on a timely basis to cure the default.

(b) *Requirements for acquisition grants.* In addition to the requirements of paragraph (a) of this section, a grantee which has received a grant under section 330 of the Act for a project which includes the acquisition of an existing building must:

(1) *Bona-fide sale.* Acquire or, in the case of a grant solely for amortization of principal and payment of interest on an existing loan, have acquired the existing building pursuant to a bona-fide sale involving an actual cost to the applicant and resulting in additional or improved facilities for the purposes of the project.

(2) *Standards of construction and equipment.* Except in the case of a grant solely for amortization of principal and payment of interest on an existing loan, obtain a determination by the Secretary that the facility conforms (or upon completion of any necessary alteration and renovation or modernization will conform) to the standards set forth in §51c.503(a)(7)(iii) of this subpart before entering into a final or unconditional contract for the acquisition. Where the Secretary finds that exceptions to or modifications of any such standards would be consistent with the purposes of the Act and of the program, he may authorize such exceptions or modifications.

(3) *Financing.* Where the grantee will obtain a loan secured by the building in order to acquire the building, obtain such financing at the lowest current rate prevailing in the area for comparable loans on comparable facilities.

(c) *Requirements for modernization grants.* In addition to the requirements of paragraph (a) of this section, a grantee which has received a grant under section 330 of the Act for a project which includes the modernization of an existing building must:

(1) *Costs in excess of approved costs.* Finance all costs in excess of the estimated costs approved in the application and submit to the Secretary for prior approval any changes that substantially alter the scope of the function, utilities, or safety of the facility.

(2) *Competitive bids.* (i) Obtain the approval of the Secretary before the project is advertised or placed on the market for bidding; such approval must include a determination by the Secretary that the final plans and specifications conform to the standards set forth in §51c.503(a)(7)(iii) of these regulations.

(ii) Except as otherwise provided by State or local law, contract for construction (including the purchase and installation of built-in equipment) on a lump sum fixed-price basis, and award contracts on the basis of competitive bidding obtained by public advertising with award of the contracts to the lowest responsive and responsible bidders. The provision for exceptions based on State and local law shall not be invoked to give local contractors or suppliers a percentage preference over non-local contractors bidding for the same contract. Such practices are precluded by this paragraph.

(3) *Construction contracts.* (i) Include the following conditions and provisions in all construction contracts for the modernization project:

(A) The provisions set forth in ''DHHS Requirements for Federally Assisted Construction Contracts Regarding Labor Standards and Equal Employment Opportunities,'' Form DHHS 514 (rev. 7/76) (issued by the Office of Grants Administration Policy, U.S. Department of Health and Human Services) pertaining to the Davis-Bacon Act, the Contract Work Hours Standards Act, and the Copeland Act (Anti-Kickback) Regulations, except in the case of contracts in the amount of $2,000 or less; and pertaining to Executive Order 11246, 30 FR 12319 (September 24, 1965), as amended, relating to nondiscrimination in construction contract employment, except in the case of contracts in the amount of $10,000 or less;

(B) That the contractor shall furnish performance and payment bonds each of which shall be in the full amount of the contract price, and shall maintain, during the life of the contract, adequate fire, workmen's compensation, public liability, and property damage insurance: *Provided, however,* That in

the case of a State or local unit of government which enters into a construction contract of less than $100,000, State or local provisions with respect to performance and payment bonds shall be deemed to meet the requirements of this paragraph; and

(C) That the Secretary shall have access at all reasonable times to work wherever it is in preparation or progress, and the contractor shall provide proper facilities for such access and inspection.

(ii) *Executive Order 11246*. Comply with the applicable requirements of Executive Order 11246, 30 FR 12319 (September 24, 1965) as amended, relating to nondiscrimination in construction contract employment, and the applicable rules, regulations, and procedures prescribed pursuant thereto.

(4) *Modernization supervision*. Provide and maintain competent and adequate architectural or engineering supervision and inspection at the modernization site to insure that the completed work conforms with the plans and specifications.

(5) *Completion responsibility*. Complete the modernization in accordance with the grant application and the approved plans and specifications.

(6) *Progress reports*. Furnish progress reports and such other information concerning the modernization as the Secretary may require.

(d) The Secretary may at any time approve exceptions to the provisions of this section where he finds that such exceptions are not inconsistent with section 330 of the Act, other requirements of law, or the purposes of the program.

[41 FR 57000, Dec. 30, 1976, as amended at 43 FR 5352, Feb. 7, 1978]

§ 51c.505 Determination of cost.

The cost of acquisition and/or modernization of existing buildings for which funds may be granted under this part will be determined by the Secretary, utilizing such documentation submitted by the applicant as the Secretary may prescribe (including the reports of such real estate appraisers as the Secretary may approve) and other relevant factors, taking into consideration only that portion of the existing building necessary for the operation of the approved project.

[41 FR 5700, Dec. 30, 1976]

§ 51c.506 Use of grant funds.

Grant funds may be used to amortize the principal of or pay interest on a loan or mortgage on an existing building acquired under this part, including a building purchased by a grantee prior to the promulgation of this part, but only if the building is being used for the purposes of section 330 and complies with the applicable provisions of this subpart and only to the extent the Secretary finds such principal amounts and interest rates to be reasonable.

[41 FR 5700, Dec. 30, 1976]

§ 51c.507 Facility which has previously received Federal grant.

No grant for the acquisition of a facility which has previously received a Federal grant for construction, acquisition, or equipment shall serve either to reduce or restrict the liability of the applicant or any other transferor or transferee from any obligation of accountability imposed by the Federal Government by reason of such prior grant.

[41 FR 5700, Dec. 30, 1976]

PART 51d—MENTAL HEALTH AND SUBSTANCE ABUSE EMERGENCY RESPONSE PROCEDURES

Sec.

51d.1 To what does this subpart apply?
51d.2 Definitions.
51d.3 Who is eligible for an award under this subpart?
51d.4 What information is required in the application?
51d.5 How is an emergency determined to exist?
51d.6 How will applications be evaluated and awarded?
51d.7 What are the limitations on how award funds may be used?
51d.8 Which other HHS regulations apply to these awards?
51d.9 What other conditions apply to these awards?
51d.10 What are the reporting requirements?

AUTHORITY: 42 U.S.C. 290aa(m).

SOURCE: 66 FR 51877, Oct. 11, 2001, unless otherwise noted.

§51d.1 To what does this subpart apply?

The regulations in this subpart apply to grants that enable public entities to respond to needs in local communities created by mental health or substance abuse emergencies, as authorized under section 501(m) of the Public Health Service Act (42 U.S.C. 290aa(m)).

§51d.2 Definitions.

As used in this part:

Federally recognized Indian Tribal government means the governing body of any Indian tribe, band, nation, or other organized group or community, including any Native village as defined in, or established pursuant to, the Alaska Native Claims Settlement Act (43 U.S.C. 1601 *et seq.*), which is recognized as eligible for the special programs and services provided by the United States to Indians because of their status as Indians;

Immediate award means a short term award of up to $50,000, or such greater amount as determined by the Secretary on a case-by-case basis, to address the immediate needs resulting from a mental health or substance abuse emergency. Such funding may be provided for a period of up to 90 days.

Intermediate award means an award intended to meet the more ongoing needs resulting from a mental health or substance abuse emergency than is possible under an Immediate award. Intermediate awards may fund up to one year of services, although in some exceptional circumstances, and to the extent that funding is available, such funding may be continued for an additional period of up to one year.

Public entity means any State, any political subdivision of a State, any Federally recognized Indian tribal government or tribal organization.

Secretary means the Secretary of Health and Human Services (HHS) or any other officer or employee of that Department to whom the authority involved has been delegated.

State means one of the 50 States, the District of Columbia, Guam, the Commonwealth of Puerto Rico, the Northern Mariana Islands, the Virgin Islands, American Samoa, and the Trust Territory of the Pacific Islands.

Tribal organization means the recognized governing body of any Indian tribe; any legally established organization of Indians which is controlled, sanctioned, or chartered by such governing body or which is democratically elected by the adult members of the Indian community to be served by such organization and which includes the maximum participation of Indians in all phases of its activities.

[66 FR 51877, Oct. 11, 2001, as amended at 67 FR 56931, Sept. 6, 2002]

§51d.3 Who is eligible for an award under this subpart?

An applicant must be a public entity as defined by this subpart. Applicants are eligible for either or both Immediate and Intermediate awards.

§51d.4 What information is required in the application?

(a) *Application for Immediate awards:* The application is to contain the following information:

(1) A certification by the State's chief executive officer, or, for the purposes of a Federally recognized Indian tribal government, the principal elected official, or such officer's or official's designee, that a mental health or substance abuse emergency exists, as well as a written statement setting out the basis for the certification;

(2) A brief program plan describing needs;

(3) An estimate of the number of people to be served and the geographical area to be served;

(4) A description of the types of services to be provided;

(5) A budget justifying the amount of the request;

(6) Required certifications; and

(7) Such other pertinent information as the Secretary may require.

(b) *Application for Intermediate awards:* The application is to be submitted on an OMB-approved application form and contain the following:

(1) If the applicant has not applied previously for an Immediate award, a certification by the State's chief executive officer, or, for the purposes of a Federally recognized Indian tribal government, the principal elected official, or such officer's or official's designee, that a mental health or substance

abuse emergency exists, as well as a written statement setting out the basis for the certification;

(2) An application submission date within three months of the date of the event that precipitated the mental health or substance abuse emergency, as certified in accordance with 51d.4(a)(1) or (b)(1), except that upon the request of a State, the Secretary may provide a waiver of this application submission deadline if the Secretary determines there is good cause to justify the waiver;

(3) A detailed and comprehensive assessment of need;

(4) Demographics specific to the estimated number of people to be served;

(5) A description of the services that were provided up to the date of the submission of the Intermediate award application;

(6) The geographical area to be served;

(7) A detailed implementation program plan and related time line, including a description of outreach to special population groups affected by the crisis;

(8) A budget justifying the amount of the request for personnel, equipment, supplies, travel, training, data collection and any technical assistance required; the budget shall include an identification of the resources the applicant is able to commit to the project, if any, including any in-kind contributions;

(9) Any information that has changed since an Immediate application was submitted, if one was submitted; and

(10) such other pertinent information as the Secretary may require.

(c) *Signature on Award Applications.* The application must be signed by an individual authorized to act for the applicant and to assume on behalf of the applicant the obligations imposed by the statute, all applicable regulations, and any additional conditions of the grant.

§ 51d.5 How is an emergency determined to exist?

(a) In making a decision as to whether a mental health or substance abuse emergency exists for purposes of section 501(m) of the PHS Act, the Secretary, using discretion, will consider all relevant factors, but at a minimum the following must exist:

(1) Existing State, Tribal and local systems for mental health and/or substance abuse services are overwhelmed or unable to meet the existing mental health or substance abuse needs of the local community at issue; and

(2) This inability to meet the mental health and/or substance abuse service needs of a local community is the direct consequence of a clear precipitating event. This precipitating event must:

(i) Have a sudden, rapid onset and a definite conclusion, such as:

(A) A natural disaster (including, but not limited to, a hurricane, tornado, storm, flood, earthquake, fire, drought, or other natural catastrophe); or

(B) A technological disaster (including, but not limited to, a chemical spill, a major industrial accident, or a transportation accident); or

(C) A criminal act with significant casualties (including, but not limited to, a domestic act of terrorism, a hostage situation, or an incident of mass violence including school shootings and riots); and

(ii) Result in significant:

(A) Death,

(B) Injury,

(C) Exposure to life-threatening circumstances,

(D) Hardship,

(E) Suffering,

(F) Loss of property, or

(G) Loss of community infrastructure (e.g., loss of treatment facilities, staff, public transportation and/or utilities, or isolation from services); and

(3) No other local, State, Tribal or Federal funding is available to adequately address the specific level of need resulting from the precipitating event and resulting emergency mental health and/or substance abuse service needs of the impacted community.

(b) In making a determination that a mental health or substance abuse emergency exists, the Secretary will consider the certification and written statements provided in accordance with § 51d.4(a)(1) or (b)(1), and other information independently available to the Secretary.

(c) Once the Secretary determines that a mental health or substance

abuse emergency exists, the Secretary may exercise discretion to make awards to enable public entities to respond to the emergency, within the limits of funds available.

§51d.6 How will applications be evaluated and awarded?

(a) In assessing applications for funding, the Secretary will utilize the following criteria.

(1) *Documentation of Need.* Applicant has demonstrated mental health and/or substance abuse needs directly resulting from the precipitating event. The precipitating event is clearly identified along with information regarding its impact. Applicant has identified any high risk groups or populations with special concerns that may impact the delivery of services (e.g., children, adolescents, older adults, ethnic and cultural groups, lower income populations). This documentation of need shall include the extent of physical, psychological and social problems observed, and a description of how the estimate of the number of people to be served was made. Applicant has clearly documented that no other local, State, Tribal or Federal funding sources are available to address the need.

(2) *Plan of Services.* Applicant has a clear plan of services to address documented needs within a defined geographic area and in a specified time period. The plan of services is appropriate to the type of grant requested (e.g., Immediate or Intermediate) and specifically addresses the needs of any high risk groups or populations with special concerns identified in the assessment of need. The plan of services clearly identifies the following:

(a) The types of services to be provided (e.g., outreach, crisis counseling, public education on stress management and crisis mental health, public education on substance abuse prevention, information and referral services, short term substance abuse or mental health prevention and/or treatment services);

(b) Strategies for targeting those identified as needing services, including high risk groups or populations with special concerns identified in the needs assessment;

(c) Appropriate training to be provided to staff to assure that services are appropriate to the crisis situation and the plans for community recovery;

(d) Quality control methods in place to assure appropriate services to the target population;

(e) Staff support mechanisms that are available;

(f) Plans for coordination of services with key local, State, Tribal and Federal partners involved in addressing the precipitating event (e.g., emergency management agencies, law enforcement, education agencies, public health agencies, and other agencies active in crisis response); and

(g) An estimate of the length of time for which said services requiring Federal funding will be needed, and the manner in which long-term cases will be referred for continued assistance after Federal funds have ended.

(3) *Organizational Capability.* Applicant is a public entity with demonstrated organizational capacity to deliver services as described in the plan of services. The applicant should also have a demonstrated history of service delivery to the target population within the defined service area for the program. The budget submitted shall provide sufficient justification and demonstrate that it is consistent with the documentation of need and plan of services. This shall include a description of the facilities to be utilized, including plans for securing office space if necessary to the project.

(b) In determining the appropriateness and necessity of funding, the Secretary may consult with other Federal agencies responsible for responding to crisis incidents, including the Readiness, Response and Recovery Directorate within the Federal Emergency Management Agency (FEMA), the Safe and Drug Free Schools Program within the U.S. Department of Education, the Office for Victims of Crime (OVC) within the U.S. Department of Justice, the National Transportation Safety Board (NTSB) within the U.S. Department of Transportation, the Emergency Response Program within the Environmental Protection Agency (EPA), the Bureau of Indian Affairs (BIA) within the U.S. Department of the Interior, the Animal and Plant Health Inspection Service within the U.S. Department of Agriculture, the Indian Health

Service (IHS) within the U.S. Department of Health and Human Services, and other Federal agencies with jurisdiction over specific types of crisis response.

§ 51d.7 What are the limitations on how award funds may be used?

Unallowable Expenses: The following expenses will not be reimbursed under section 501(m) of the PHS Act:

(1) Major construction costs;

(2) Childcare services, unless provided by the institution or entity providing mental health or substance abuse treatment and integral to the treatment program;

(3) Services outside of the geographic area specified in the application, except to the extent that the precipitating event requires physical relocation of either affected parties or facilities;

(4) Any mental health or substance abuse services not directly related to the mental health or substance abuse emergency;

(5) Any expenses that supplant ongoing local, State, Tribal or Federal expenditures; and

(6) Any other costs unallowable by Federal law or regulation.

§ 51d.8 Which other HHS regulations apply to these awards?

Several other HHS regulations apply to grants under this part. These include, but are not limited to:

45 CFR part 16—Procedures of the Departmental Grant Appeals Board

45 CFR part 74—Administration of grants

45 CFR part 75—Informal grant appeals procedures

45 CFR part 76—Debarment and suspension from eligibility for financial assistance

45 CFR part 80—Nondiscrimination under programs receiving Federal assistance through the Department of Health and Human Services effectuation of title VI of the Civil Rights Act of 1964

45 CFR part 81—Practice and procedure for hearings under part 80 of this title

45 CFR part 84—Nondiscrimination on the basis of handicap in programs and activities receiving or benefitting from Federal financial assistance

45 CFR part 86—Nondiscrimination on the basis of sex in education programs and activities receiving or benefitting from Federal financial assistance

45 CFR part 91—Nondiscrimination on the basis of age in HHS programs or activities receiving Federal financial assistance

45 CFR part 92—Uniform administrative requirements for grants and cooperative agreements to state and local governments

[66 FR 51877, Oct. 11, 2001, as amended at 67 FR 56931, Sept. 6, 2002]

§ 51d.9 What other conditions apply to these awards?

Award funding made under this authority is to be supplemental in nature. Consistent with the criteria in § 51d.5 and the certification in § 51d.4(a)(1), such funds will only be made available if no other local, State, Tribal or Federal source is available to adequately address the emergency mental health and/or substance abuse service needs of the impacted community.

§ 51d.10 What are the reporting requirements?

(a) For immediate awards:

(1) A mid-program report only if an Intermediate award application is being prepared and submitted. This report shall be included as part of the Intermediate award application,

(2) Quarterly financial status reports of expenditures to date, due 30 days following the end of the reporting period, as permitted by 45 CFR 92.41(b),

(3) A final program report, a financial status report, and a final voucher 90 days after the last day of Immediate award services, in accordance with 45 CFR 92.50(b).

(b) For intermediate awards:

(1) Quarterly progress reports, due 30 days following the end of the reporting period, as permitted by 45 CFR 92.40(b),

(2) Quarterly financial status reports of expenditures to date, due 30 days following the end of the reporting period, as permitted by 45 CFR 92.41(b),

(3) A final program report, to be submitted within 90 days after the end of

the program services period, in accordance with 45 CFR 92.50(b),

(4) A financial status report, to be submitted within 90 days after the end of the program services period, in accordance with 45 CFR 92.50(b),

(5) Such additional reports as the Secretary may require.

(c) The following shall be specifically addressed in final program reports:

(1) Description of services provided,

(2) Number of individuals assisted,

(3) Amount of funding expended and for what purposes,

(4) Personnel costs,

(5) Training costs,

(6) Technical consultation costs,

(7) Equipment costs,

(8) Travel and transportation costs, and

(9) A narrative describing lessons learned and exemplary practices, and a description of the transition plan, for how services will be funded or provided when Federal funds have been exhausted.

PARTS 51e–51g [RESERVED]

PART 52—GRANTS FOR RESEARCH PROJECTS

Sec.
52.1 To which programs do these regulations apply?
52.2 Definitions.
52.3 Who is eligible to apply for a grant?
52.4 How to apply for a grant.
52.5 Evaluation and disposition of applications.
52.6 Grant awards.
52.7 Use of funds; changes.
52.8 Other HHS policies and regulations that apply.
52.9 Additional conditions.

AUTHORITY: 42 U.S.C. 216.

§ 52.1 To which programs do these regulations apply?

(a) *General.* The regulations of this party apply to all health-related research project grants administered by the PHS or its components, except for grants for health services research, demonstration, and evaluation projects administered by the Agency for Health Care Policy and Research. These regulations do not apply to research grants that are not for the support of an identified research project (sometimes referred to as general research support grants), grants for the construction or operation of research facilities, grants for prevention or educational programs, demonstration grants, traineeships, training grants, or to the support of research training under the National Research Service Awards program.

(b) *Specific programs covered.* From time to time the Secretary will publish a list of the research project grant programs covered by this part. The list is for informational purposes only and is not intended to restrict the statement of applicability in paragraph (a) of this section. In addition, information on particular research project grant programs, including applications and instructions, may be obtained from the component of the PHS that administers the program.

[61 FR 55105, Oct. 24, 1996.]

§ 52.2 Definitions.

As used in this part:

Act means the Public Health Service Act, as amended (42 U.S.C. 201 *et seq.*).

Grantee means the institution, organization, individual or other person designated in the grant award document as the responsible legal entity to whom a grant is awarded under this part. The term shall also mean the recipient of a cooperative agreement awarded under this part.

HHS means the Department of Health and Human Services.

Principal investigator means the individual(s) judged by the applicant organization to have the appropriate level of authority and responsibility to direct the project or program supported by the grant and who is or are responsible for the scientific and technical direction of the project.

Project means the particular activity for which funding is sought under this part as described in the application for grant award.

Public Health Service and *PHS* means the operating division of the Department that consists of the Agency for Health Care Policy and Research, the Centers for Disease Control and Prevention, the Food and Drug Administration, the Health Resources and Services Administration, the Indian Health Service, the National Institutes

of Health, the Office of the Assistant Secretary for Health, the Substance Abuse and Mental Health Administration, and the Agency for Toxic Substances and Disease Registry.

Research means a systematic investigation, study or experiment designed to contribute to general knowledge relating broadly to public health by establishing, discovering, developing, elucidating or confirming information about, or the underlying mechanisms relating to, the biological functions, diseases, or related matters to be studied.

Secretary means the Secretary of HHS and any other officer or employee of the HHS to whom the authority involved may be delegated.

[61 FR 55105, Oct. 24, 1996, as amended at 74 FR 57921, Nov. 10, 2009]

§ 52.3 Who is eligible to apply for a grant?

(a) *Persons eligible.* Any individual, corporation, public or private institution or agency, or other legal entity shall be eligible for a grant award, except:

(1) An individual or entity which is otherwise ineligible for an award under applicable law or regulation;

(2) Federal agencies or institutions, unless specifically authorized by law to receive the grant; or

(3) Individuals, corporations, institutions, agencies, and other entities during the period they are debarred or suspended from eligibility for Federal financial assistance (see 45 CFR part 76).

(b) *Permissible activities within research projects.* Any project found by the Secretary to be a research project within the meaning of this part shall be eligible for a grant award. Eligible projects may consist of laboratory, clinical, population, field, statistical, basic, applied or other types of investigations, studies or experiments, or combinations thereof, and may either be limited to one, or a particular aspect of a problem or subject, or may consist of two or more related problems or subjects for concurrent or consecutive investigation and involving multiple disciplines, facilities and resources.

(c) *Preferences.* In the award of grants for international research relating to the development and evaluation of vaccines and treatments for AIDS under section 2315 of the Act, preference shall be given to:

(1) Activities conducted by, or in cooperation with, the World Health Organization, and

(2) With respect to activities in the Western Hemisphere, activities conducted by, or in cooperation with, the Pan American Health Organization or the World Health Organization.

[61 FR 55105, Oct. 24, 1996]

§ 52.4 How to apply for a grant.

Each institution interested in applying for a grant under this part must submit an application at such time and in such form and manner as the Secretary may prescribe.

[61 FR 55105, Oct. 24, 1996]

§ 52.5 Evaluation and disposition of applications.

(a) *Evaluation.* All applications filed in accordance with § 52.4 shall be evaluated by the Secretary through such officers and employees and such experts or consultants engaged for this purpose as the Secretary determines are specially qualified in the areas of research involved in the project, including review by an appropriate National Advisory Council or other body as may be required by law. The Secretary's evaluation shall take into account among other pertinent factors the scientific merit and significance of the project, the competency of the proposed staff in relation to the type of research involved, the feasibility of the project, the likelihood of its producing meaningful results, the proposed project period, and the adequacy of the applicant's resources available for the project and the amount of grant funds necessary for completion, and in the case of applications for support of research in emergency medical services, special consideration shall be given to applications for grants for research relating to the delivery of emergency medical services in rural areas.

(b) *Disposition.* On the basis of the Secretary's evaluation of an application in accordance with paragraph (a) of this section and subject to approvals, recommendations or consultations by the appropriate National Advisory

Council or other body as may be required by law, the Secretary will (1) approve, (2) defer because of either lack of funds or a need for further evaluation, or (3) disapprove support of the proposed project in whole or in part. With respect to approved projects, the Secretary will determine the project period (subject to extension as provided in §52.7(c)) during which the project may be supported. Any deferral and disapproval of an application will not preclude its reconsideration or a reapplication.

[45 FR 12240, Feb. 25, 1980; 45 FR 20096, Mar. 27, 1980]

§52.6 Grant awards.

(a) Within the limits of funds available for that purpose, the Secretary will award a grant to those applicants whose approved projects will in the Secretary's judgment best promote the purposes of the statute authorizing the grant and the regulations of this part. The date specified by the Secretary as the beginning of the project period shall be no later than 9 months following the date of any initial or new award statement unless the Secretary finds that because of the nature of a project or the grantee's particular circumstances earlier assurance of grant support is required to initiate the project. Any funds granted under this part shall be expended solely for the purposes for which the funds were granted in accordance with the approved application and budget, the regulations of this part, the terms and conditions of the award and the applicable cost principles prescribed in subpart Q of 45 CFR part 74.

(b) *Evaluation of unapproved drug treatments for AIDS.* Grants under section 2314 of the Act to support research relating to the evaluation of drug treatments for AIDS not approved by the Commissioner of Food and Drugs, shall be subject to appropriate scientific and ethical guidelines established by the Secretary for each project, pursuant to section 2314(c) of the Act. In order to receive a grant, the applicant must agree to comply with those guidelines.

(c) *Notice of grant award.* (1) The notice of grant award specifies how long HHS intends to support the project without requiring the project to recompete for funds. This period, called the project period, will usually be for 1–5 years.

(2) Generally, the grant will initially be for one year and subsequent continuation awards will also be for one year at a time. A grantee must submit an application at the time and in the form and manner as the Secretary may prescribe to have support continued for each subsequent year.

(3) Neither the approval of any application nor the award of any grant commits or obligates the United States in any way to make any additional, supplemental, continuation, or other award with respect to any approved application or portion of an approved application.

(d) *Multiple or concurrent awards.* Whenever a research project involves a number of different but related problems, activities or disciplines which require evaluation by different groups, or whenever support for a project could be more effectively administered by separate handling of separate aspects of the project, the Secretary may evaluate, approve, and make one or more awards pursuant to one or more applications. When making more than one award in response to a single application, the Secretary shall consult with the applicant organization(s), as appropriate.

(e) *Unobligated balances.* The Secretary may permit unobligated grant funds remaining in the grant account at the close of a budget period to be carried forward for obligation during a subsequent budget period, provided a continuation award is made for that period and the Secretary's written approval is obtained.

(f) *Award for continuation of project under new grantee.* The Secretary, upon application in accordance with the provisions of §52.4 and without further action by a Council or other body, may make a grant to any institution or other person eligible under §52.3 for continuation of a currently supported project for which a grant was previously made to another institution or person, provided the Secretary finds that the change in the conduct of the project is consonant with the previous

evaluation and approval of the project under § 52.5.

[45 FR 12240, Feb. 25, 1980; 45 FR 20096, Mar. 27, 1980; 61 FR 55105, Oct. 24, 1996; 74 FR 57921, Nov. 10, 2009]

§ 52.7 Use of funds; changes.

(a) *Delegation of fiscal responsibility.* The grantee may not in whole or in part delegate or transfer to another person responsibility for the use or expenditure of grant funds.

(b) *Changes in project.* The permissible changes by the principal investigator in the approved project shall be limited to changes in methodology, approach or other aspects of the project to expedite achievement of the project's research objectives, including changes that grow out of the approved project and serve the best scientific strategy. If the grantee and the principal investigator are uncertain whether a change complies with this provision, the question must be referred to the Secretary for a final determination.

(c) *Changes in project period.* The project period determined pursuant to § 52.5(b) may be extended by the Secretary, with or without additional grant support, for such an additional period as the Secretary determines may be required to complete, or fulfill the purposes of, the approved project.

[45 FR 12240, Feb. 25, 1980]

§ 52.8 Other HHS regulations and policies that apply.

Several other HHS policies and regulations apply to grants under this part. These include, but are not necessarily limited to:

37 CFR part 401—Rights to inventions made by nonprofit organizations and small business firms under government grants, contracts, and cooperative agreements

42 CFR part 50, subpart A—Responsibility of PHS awardee and applicant institutions for dealing with and reporting possible misconduct in science

42 CFR part 50, subpart D—Public Health Service grant appeals procedure

42 CFR part 50, subpart F—Responsibility of applicants for promoting objectively in research for which PHS funding is sought

45 CFR part 16—Procedures of the Departmental Grant Appeals Board

45 CFR part 46—Protection of human subjects

45 CFR part 74—Administration of grants

45 CFR part 75—Informal grant appeals procedures

45 CFR part 76—Governmentwide debarment and suspension (nonprocurement) and governmentwide requirements for drug-free workplace (grants)

45 CFR part 80—Nondiscrimination under programs receiving Federal assistance through the Department of Health and Human Services—effectuation of title VI of the Civil Rights Act of 1964

45 CFR part 81—Practice and procedure for hearings under part 80 of this title

45 CFR part 84—Nondiscrimination on the basis of handicap in programs and activities receiving Federal financial assistance

45 CFR part 86—Nondiscrimination on the basis of sex in education programs and activities receiving or benefiting from Federal financial assistance

45 CFR part 91—Nondiscrimination on the basis of age in HHS programs or activities receiving Federal financial assistance

45 CFR part 92—Uniform administrative requirements for grants and cooperative agreements to State and local governments

45 CFR part 93—New restrictions on lobbying

59 FR 14508 (March 28, 1994)—NIH Guidelines on the Inclusion of Women and Minorities as Subjects in Clinical Research.

NOTE: This policy is subject to changes, and interested persons should contact the Office of Research on Women's Health, NIH, Room 201, Building 1, MSC 0161, BETHESDA, MD 20892–0161 (301–402–1770; not a toll-free number) to obtain references to the current version and any amendments.]

59 FR 34496 (July 5, 1994)—NIH Guidelines for Research Involving Recombinant DNA Molecules.

NOTE: This policy is subject to changes, and interested persons should contact the Office of Recombinant DNA Activities, NIH, Suite 323, 6000 Executive Boulevard, MSC 7010, Bethesda, MD 20892–7010 (301–496–9838; not a toll-free number) to obtain references to the current version and any amendments.]

''PHS Grants Policy Statement,'' DHHS Publication No. (OASH) 94–50,000 (Rev.) April 1, 1994.

NOTE: This policy is subject to changes, and interested persons should contact the Grants Policy Branch, OASH, Room 17A45, Parklawn Building, 5600 Fishers Lane, Rockville, MD 20857 (301–443–1874; not a toll-free number) to obtain references to the current version and any amendments.]

''Public Health Service Policy on Humane Care and Use of Laboratory Animals,'' Office for Protection from Research Risks, NIH (Revised September 1986).

NOTE: This policy is subject to changes, and interested persons should contact the Office for Protection from Research Risks, NIH, Suite 3B01, 6100 Executive Boulevard, MSC 7507, Rockville, MD 20852–7507 (301–496–7005; not a toll-free number) to obtain references to the current version and any amendments.]

[61 FR 55106 Oct. 24, 1996]

§52.9 Additional conditions.

The Secretary may with respect to any grant award or class of awards impose additional conditions prior to or at the time of any award when in the Secretary's judgment such conditions are necessary to assure or protect advancement of the approved project, the interests of the public health, or the conservation of grant funds.

[45 FR 12240, Feb. 25, 1980; 45 FR 20096, Mar. 27, 1980]

PART 52a—NATIONAL INSTITUTES OF HEALTH CENTER GRANTS

Sec.

52a.1 To which programs do these regulations apply?
52a.2 Definitions.
52a.3 Who is eligible to apply?
52a.4 What information must each application contain?
52a.5 How will NIH evaluate applications?
52a.6 Information about grant awards.
52a.7 For what purposes may a grantee spend grant funds?
52a.8 Other HHS regulations and policies that apply.
52a.9 Additional conditions.

AUTHORITY: 42 U.S.C. 216, 284g, 285a–6(c)(1)(E), 285a–7(c)(1)(G), 285b–4, 285c–5, 285c–8, 285d–6, 285e–2, 285e–3, 285e–10a, 285f–1, 285g–5, 285g–7, 285g–9, 285m–3, 285o–2, 286a–7(c)(1)(G), 287c–32(c), 300cc–16.

SOURCE: 57 FR 61006, Dec. 23, 1992, unless otherwise noted.

§52a.1 To which programs do these regulations apply?

(a) The regulations of this part apply to grants by the National Institutes of Health and its organizational components to support the planning, establishment, expansion, and operation of research and demonstration and/or multipurpose centers in health fields described in this paragraph. Specifically, these regulations apply to:

(1) National Institute of Mental Health centers of excellence with respect to research on autism, as authorized by section 409C of the Act (42 U.S.C. 284g);

(2) National cancer research and demonstration centers (including payments for construction), as authorized by section 414 of the Act (42 U.S.C. 285a–3);

(3) National cancer research and demonstration centers with respect to breast cancer, as authorized by section 417 of the Act (42 U.S.C. 285a–6);

(4) National cancer and demonstration centers with respect to prostate cancer, as authorized by section 417A of the Act (42 U.S.C. 285a–7);

(5) National research and demonstration centers for heart, blood vessel, lung, and blood diseases, sickle cell anemia, blood resources, and pediatric cardiovascular diseases (including payments for construction), as authorized by section 422 of the Act (42 U.S.C. 485b–4);

(6) Research and training centers (including diabetes mellitus, and digestive, endocrine, metabolic, kidney and urologic diseases), as authorized by section 431 of the Act (42 U.S.C. 285c–5);

(7) Research and training centers regarding nutritional disorders, as authorized by section 434 of the Act (42 U.S.C. 285c–8);

(8) Multipurpose arthritis and musculoskeletal diseases centers (including payments for alteration, but not construction), as authorized by section 441 of the Act (42 U.S.C. 285d–6);

(9) Alzheimer's disease centers, as authorized by section 445 of the Act (42 U.S.C. 285e–2);

(10) Claude D. Peppers Older Americans Independence Centers, as authorized by section 445A of the Act (42 U.S.C. 285e–3);

(11) Centers of excellence in Alzheimer's disease research and treatment, as authorized by section 445I of the Act (42 U.S.C. 285e–10a);

(12) Research centers regarding chronic fatigue syndrome, as authorized by section 447 of the Act (42 U.S.C. 285f–1);

(13) Research centers with respect to contraception and infertility, as authorized by section 452A of the Act (42 U.S.C. 285g–5);

(14) Child health research centers, as authorized by section 452C of the Act (42 U.S.C. 285g–7);

(15) Fragile X research centers, as authorized by 452E of the Act (42 U.S.C. 285g–9);

(16) Multipurpose deafness and other communication disorders centers, as authorized by section 464C of the Act (42 U.S.C. 285m–3);

(17) National drug abuse research centers, as authorized by section 464N of the Act (42 U.S.C. 285o–2);

(18) Centers of excellence in biomedical and behavioral research training for individuals who are members of minority health disparity populations or other health disparity populations, as authorized by section 485F of the Act (42 U.S.C. 287c–32); and

(19) Centers for acquired immunodeficiency syndrome (AIDS) research, as authorized by section 2316 of the Act (42 U.S.C. 300cc–16).

(b) This part does not apply to:

(1) Grants for construction (see 42 CFR part 52b), except as noted in paragraph (a) of this section;

(2) Grants covered by 42 CFR part 52 (grants for research projects); or

(3) Grants for general research support under section 301(a)(3) of the Act (42 U.S.C. 241(a)(3)).

(c) This part also applies to cooperative agreements made to support the centers specified in paragraph (a) of this section. When a reference is made in this part to ''grants,'' the reference shall include ''cooperative agreements.''

[61 FR 55108, Oct. 24, 1996, as amended at 68 FR 69621, Dec. 15, 2003]

§ 52a.2 Definitions.

As used in this part:

Act means the Public Health Services Act, as amended (42 U.S.C. 201 *et seq.*).

Center means:

(a) For purposes of grants authorized by section 409C of the Act, a public or nonprofit private entity which provides for planning and conducting basic and clinical research into the cause, diagnosis, early detection, prevention, control, and treatment of autism, including the fields of developmental neurobiology, genetics, and psychopharmacology;

(b) For purposes of grants authorized by section 414 of the Act, an agency or institution which provides for planning and conducting basic and clinical research into, training in, and demonstration of advanced diagnostic, control, prevention and treatment methods for cancer;

(c) For purposes of grants authorized by section 417 of the Act, an agency or institution which provides for planning and conducting basic, clinical, epidemiological, psychological, prevention and treatment research and related activities on breast cancer;

(d) For purposes of grants authorized by section 417A of the Act, an agency or institution which provides for planning and conducting basic, clinical, and epidemiological, psychosocial, prevention and control, treatment, research, and related activities on prostate cancer;

(e) For purposes of grants authorized by section 422 of the Act, an agency or institution which provides for planning and basic and clinical research into, training in, and demonstration of, management of blood resources and advanced diagnostic, prevention, and treatment methods (including emergency services) for heart, blood vessel, lung, or blood diseases including sickle cell anemia;

(f) For purposes of grants authorized by section 431 of the Act, a single institution or a consortium of cooperating institutions, which conducts research, training, information programs, epidemiological studies, data collection activities and development of model programs in diabetes mellitus and related endocrine and metabolic diseases;

(g) For purposes of grants authorized by section 434 of the Act, a single institution or a consortium of cooperating institutions which conducts basic and clinical research, training, and information programs in nutritional disorders, including obesity;

(h) For purposes of grants authorized by section 441 of the Act, a facility which conducts basic and clinical research into arthritis and musculosketal diseases; and orthopedic procedures, training, and information programs for the health community and the general public;

(i) For purposes of grants authorized by section 445 of the Act, a public or private nonprofit entity (including university medical centers) which conducts basic and clinical research (including multidisciplinary research) into, training in, and demonstration of advanced diagnostic, prevention, and treatment methods for Alzheimer's disease;

(j) For purposes of grants authorized by section 445A of the Act, a single public or private nonprofit institution or entity or a consortium of cooperating institutions or entities which conducts research into the aging processes and into the diagnosis and treatment of diseases, disorders, and complications related to aging, including menopause, which research includes research on such treatments, and on medical devices and other medical interventions regarding such diseases, disorders, and complications, that can assist individuals in avoiding institutionalization and prolonged hospitalization and in otherwise increasing the independence of the individuals.

(k) For the purposes of section 445I of the Act, a single institution or consortium of cooperating institutions which conducts basic and clinical research on Alzheimer's disease.

(l) For purposes of grants authorized by section 447 of the Act, a single institution or consortium of cooperating institutions which conducts basic and clinical research on chronic fatigue syndrome;

(m) For purposes of grants authorized by section 452A of the Act, a single institution or consortium of cooperating institutions which conducts clinical and other applied research, training programs, continuing education programs, and information programs with respect to methods of contraception, and infertility;

(n) For purposes of grants authorized by section 452C of the Act, an agency or institution which conducts research with respect to child health, and gives priority to the expeditious transfer of advances from basic science to clinical applications and improving the care of infants and children;

(o) For purposes of grants authorized by section 452E of the Act, a single institution or a consortium of cooperating institutions which conducts research for the purposes of improving the diagnosis and treatment of, and finding the cure for, fragile X;

(p) For purposes of grants authorized by section 464C of the Act, a single institution or a consortium of cooperating institutions which conducts basic and clinical research into, training in, information and continuing education programs for the health community and the general public about, and demonstration of, advanced diagnostic, prevention, and treatment methods for disorders of hearing and other communication processes and complications resulting from these disorders;

(q) For purposes of grants authorized by section 464N of the Act, institutions designated as National Drug Abuse Research Centers for interdisciplinary research relating to drug abuse and other biomedical, behavioral, and social issues related to drug abuse;

(r) For purposes of grants authorized by section 485F of the Act, a biomedical or behavioral research institution or consortia that:

(1) Have a significant number of members of minority health disparity populations or other health disparity populations enrolled as students in the institution (including individuals accepted for enrollment in the institution);

(2) Have been effective in assisting such students of the institution to complete the program of education or training and receive the degree involved;

(3) Have made significant efforts to recruit minority students to enroll in and graduate from the institution, which may include providing means-tested scholarships and other financial assistance as appropriate; and

(4) Have made significant recruitment efforts to increase the number of minority or other members of health disparity populations serving in faculty or administrative positions at the institution; or

(s) For the purposes of grants authorized in section 2316 of the Act, an entity for basic and clinical research into, and training in, advanced diagnostic, prevention, and treatment methods for

acquired immunodeficiency syndrome (AIDS).

Director means the Director of NIH or the organizational component authorized to award grants to support centers under this part.

Grant(s) means, unless the context otherwise requires, an award of funds to support a center authorized under § 52a.1. The term includes cooperative agreement(s).

NIH means the National Institutes of Health and its organizational components that award grants.

Nonprofit as applied to any agency or institution means an agency or institution which is a corporation or an association, no part of the net earnings of which inures or may lawfully inure to the benefit of any private shareholder or individual.

Project period means the period of time, from one to five years, specified in the notice of grant award that the NIH or the awarding component intends to support a proposed center without requiring the center to recompete for funds.

[57 FR 61006, Dec. 23, 1992, as amended at 61 FR 55108, Oct. 24, 1996; 68 FR 69621, Dec. 15, 2003]

§ 52a.3 Who is eligible to apply?

(a) Any public or private nonprofit agency, institution, or consortium of agencies is eligible to apply for a grant under sections 409C, 414, 417, 417A, 422, 445, 445A, 445I, 447, 452A, and 2316 of the Act.

(b) Any public or private nonprofit or for-profit agency, institution, or consortium of agencies is eligible to apply for a grant under sections 428, 431, 434, 441, 452C, 452E, 464C, 464J, 464N, and 485F of the Act.

(c) Any applicant under this part must be located in a State, the District of Columbia, Puerto Rico, the Virgin Islands, the Canal Zone, Guam, American Samoa, or the successor States of the Trust Territory of the Pacific Islands (the Federated States of Micronesia, the Republic of the Marshall Islands, and the Republic of Palau).

[57 FR 61006, Dec. 23, 1992, as amended at 61 FR 55109, Oct. 24, 1996; 68 FR 69622, Dec. 15, 2003]

§ 52a.4 What information must each application contain?

Each application under this part must include detailed information as to the following:

(a) The personnel, facilities, and other resources available to the applicant with which to initiate and maintain the proposed center grants program;

(b) Any research, training, demonstration, or information dissemination activities in which the applicant is currently engaged; the sources of funding for these activities; and the relevance of these activities to the proposed center grants program;

(c) Proposed research, training, demonstration, and information dissemination activities;

(d) The proposed organizational structure of the center and the relationship of the proposed center to the applicant organization(s);

(e) The names and qualifications of the center director and key staff members who would be responsible for conducting the proposed activities;

(f) Proposed methods for monitoring and evaluating individual activities and the overall center program;

(g) Proposed methods for coordinating the center's activities, where appropriate, with similar efforts by other public and private organizations;

(h) The availability of any community resources necessary to carry out proposed activities; and

(i) Efforts to be made to generate and collect income from sources other than NIH to be used to further the purposes of the center program. NIH encourages these efforts. Income may include, but is not limited to, that generated from the sale or rental of products or services produced by grant-supported activities, such as laboratory tests, computer time, and payments received from patients or third parties, where appropriate (the disposition of grant-related income is governed by 45 CFR 74.40 through 74.47 and 45 CFR 92.25);

(j) The proposed budget for the center and a justification for the amount of the grant funds requested; and

(k) Any other information that the Director of the awarding institute may request.

(Approved under OMB Control Number 0925–0001)

§ 52a.5 How will NIH evaluate applications?

(a) NIH considers the following in evaluating Center grant applications:

(1) The scientific and technical merit of the proposed program;

(2) The qualifications and experience of the center director and other key personnel;

(3) The statutory and program purposes to be accomplished;

(4) The extent to which the various components of the proposed program would be coordinated into one multidisciplinary effort within the center;

(5) The extent to which the center's activities would be coordinated with similar efforts by other organizations;

(6) The administrative and managerial capability of the applicant;

(7) The reasonableness of the proposed budget in relation to the proposed program; and

(8) Other factors which the awarding institute, center, or division considers appropriate in light of its particular statutory mission.

(b) Where required by statute or NIH policy, applications are reviewed by appropriate national advisory councils or boards before awards are made. NIH grants may be awarded generally only after approval recommendations from both appropriate scientific peer review groups and national advisory councils or boards.

§ 52a.6 Information about grant awards.

(a) The notice of grant award specifies how long NIH intends to support the project without requiring the project to recompete for funds. This period, called the project period, will usually be for 1–5 years.

(b) Generally, the grant will initially be for one year, and subsequent continuation awards will also be for one year at a time. A grantee must submit a separate application to have the support continued for each subsequent year. Decisions regarding continuation awards and the funding level of such awards will be made after consideration of such factors as the grantee's progress and management practices, and the availability of funds. In all cases, continuation awards require a determination by the NIH that continued funding is in the best interest of the Federal Government.

(c) Neither the approval of any application, nor the award of any grant commits or obligates the Federal Government in any way to make any additional, supplemental, continuation, or other award with respect to any approved application or portion of an approved application.

[Approved under OMB Control Number 0925–0001]

§ 52a.7 For what purposes may a grantee spend grant funds?

A grantee shall spend funds it receives under this part solely in accordance with the approved application and budget, the authorizing legislation, the regulations of this part, the terms and conditions of the award, and the applicable cost principles prescribed in 45 CFR 74.27.

[61 FR 55109, Oct. 24, 1996]

§ 52a.8 Other HHS regulations and policies that apply.

Several other regulations and policies apply to this part. These include, but are not necessarily limited to:

42 CFR part 50, Subpart A—Responsibilities of PHS awardee and applicant institutions for dealing with and reporting possible misconduct in science

42 CFR part 50, Subpart D—Public Health Service grant appeals procedures

42 CFR part 50, subpart F—Responsibility of applicants for promoting objectivity in research for which PHS funding is sought

45 CFR part 16—Procedures of the Departmental Grant Appeals Board

45 CFR part 46—Protection of human subjects

45 CFR part 74—Uniform administrative requirements for awards and subawards to institutions of higher education, hospitals, other nonprofit organizations, and commercial organizations; and certain grants and agreements with states, local governments and Indian tribal governments

45 CFR part 75—Informal grant appeals procedures

45 CFR part 76—Governmentwide debarment and suspension (nonprocurement) and governmentwide requirements for drug-free workplace (grants)
45 CFR part 80—Nondiscrimination under programs receiving Federal assistance through the Department of Health and Human Services—Effectuation of Title VI of the Civil Rights Act of 1964
45 CFR part 81—Practice and procedure for hearings under part 80 of this title
45 CFR part 84—Nondiscrimination on the basis of handicap in programs and activities receiving or benefiting from Federal financial assistance
45 CFR part 86—Nondiscrimination on the basis of sex in education programs and activities receiving or benefiting from Federal financial assistance
45 CFR part 91—Nondiscrimination on the basis of age in HHS programs or activities receiving Federal financial assistance
45 CFR part 92—Uniform administrative requirements for grants and cooperative agreements to State and local governments
45 CFR part 93—New restrictions on lobbying
59 FR 14508 (March 28, 1994)—NIH Guidelines on the Inclusion of Women and Minorities as Subjects in Clinical Research.

[NOTE: This policy is subject to change, and interested persons should contact the Office of Research on Women's Health, NIH, Room 201, MSC 0161, BETHESDA, MD 20892–0601 (301–402–1770; not a toll-free number) to obtain references to the current version and any amendments.]

59 FR 34496 (July 5, 1994)—NIH Guidelines for Research Involving Recombinant DNA Molecules.

[NOTE: This policy is subject to change, and interested persons should contact the Office of Recombinant DNA Activities, NIH, Suite 323, 6000 Executive Boulevard, MSA 7010, BETHESDA, MD 20892–7010 (301–496–9838; not a toll-free number) to obtain references to the current version and any amendments.]

Public Health Service Policy on Humane Care and Use of Laboratory Animals, Office of Laboratory Animal Welfare, Office of Extramural Research, NIH (Revised September 1986).

NOTE: This policy is subject to change, and interested persons should contact the Office of Laboratory Animal Welfare, Office of Extramural Research, NIH, Rockledge 1, 6705 Rockledge Drive, Bethesda, Maryland 20817, telephone 301–594–2382 (not a toll-free number) to obtain references to the current version and any amendments.

[57 FR 61006, Dec. 23, 1992, as amended at 61 FR 55109, Oct. 24, 1996; 68 FR 69622, Dec. 15, 2003]

§ 52a.9 Additional conditions.

The Director may, with respect to any grant award, impose additional conditions prior to or at the time of any award when in the Director's judgment the conditions are necessary to assure the carrying out of the purposes of the award, the interests of the public health, or the conservation of grant funds.

[61 FR 55110, Oct. 24, 1996]

PART 52b—NATIONAL INSTITUTES OF HEALTH CONSTRUCTION GRANTS

Sec.
52b.1 To what programs do these regulations apply?
52b.2 Definitions.
52b.3 Who is eligible to apply?
52b.4 How to apply.
52b.5 How will NIH evaluate applications?
52b.6 What is the rate of federal financial participation?
52b.7 How is the grantee obligated to use the facility?
52b.8 How will NIH monitor the use of facilities constructed with federal funds?
52b.9 What is the right of the United States to recover federal funds when facilities are not used for research or are transferred?
52b.10 What are the terms and conditions of awards?
52b.11 What are the requirements for acquisition and modernization of existing facilities?
52b.12 What are the minimum requirements of construction and equipment?
52b.13 Additional conditions.
52b.14 Other federal laws, regulations, executive orders, and policies that apply.

AUTHORITY: 42 U.S.C. 216, 285a-2, 285a-3, 285b-3, 285b-4, 285d-6, 285i, 285m-3, 285o-4, 287a-2, 287a-3, 300cc-41.

SOURCE: 64 FR 63722, Nov. 22, 1999, unless otherwise noted.

§ 52b.1 To what programs do these regulations apply?

(a) *General.* Except as provided in paragraph (c) of this section, this part applies to all grants awarded by NIH and its components for construction of new buildings and the alteration, renovation, remodeling, improvement, expansion, and repair of existing buildings, including the provision of equipment necessary to make the building (or applicable part of the building)

suitable for the purpose for which it was constructed.

(b) *Specific programs covered.* From time to time the Director may publish a list of the construction grant programs covered by this part. The list is for informational purposes only and is not intended to restrict the statement of applicability in paragraph (a) of this section. In addition, information on particular construction grant programs, including applications and instructions, may be obtained from the component of NIH that administers the program.

(c) *Specific programs excluded.* The regulations of this part do not apply to minor alterations, renovations, or repairs funded under a research project grant (see part 52 of this chapter) or alterations or renovations funded under an NIH center grant (see part 52a of this chapter).

§ 52b.2 Definitions.

As used in this part:

Act means the Public Health Service Act, as amended (42 U.S.C. 201 *et seq.*).

Construction means the construction of new buildings or the modernization of, or the completion of shell space in, existing buildings (including the installation of fixed equipment), but excluding the cost of land acquisition and off-site improvements.

Construction grant means funds awarded for construction in accordance with the applicable provisions of the Act and this part.

Director means the Director of NIH or the director of an NIH national research institute, center, or other component of NIH, authorized to award grants for construction under the applicable provisions of the Act, and any official to whom the authority involved is delegated.

Federal share with respect to any construction project means the proportion, expressed as a percentage, of the cost of a project to be paid by a grant award under the Act.

HHS, *DHHS*, and *Department* mean the Department of Health and Human Services.

Institute means any national research institute, center, or other agency of the National Institutes of Health.

Modernization means the alteration, renovation, remodeling, improvement, expansion, and/or repair of existing buildings and the provision of equipment necessary to make the building suitable for use for the purposes of the particular program.

NIH means the National Institutes of Health and its organizational components that award construction grants.

Nonprofit as applied to any agency or institution means an agency or institution which is a corporation or an association, no part of the net earnings of which inures or may lawfully inure to the benefit of any private shareholder or individual.

Project means the particular construction activity which is supported by a grant under this part.

Secretary means the Secretary of Health and Human Services and any official to whom the authority involved is delegated.

§ 52b.3 Who is eligible to apply?

In order to be eligible for a construction grant under this part, the applicant must:

(a) Be a public or private nonprofit agency or institution;

(b) Be located in a state, the District of Columbia, Puerto Rico, the Virgin Islands, the Canal Zone, Guam, American Samoa, or the successor states of the Trust Territory of the Pacific Islands (the Federated States of Micronesia, the Republic of the Marshall Islands, and the Republic of Palau); and

(c) Meet any additional eligibility criteria specified in the applicable provisions of the Act.

§ 52b.4 How to apply.

Applications for construction grants under this part shall be made at the times and in the form and manner as the Secretary may prescribe.

§ 52b.5 How will NIH evaluate applications?

(a) In evaluating and approving applications for construction grants under this part, the Director shall take into account, among other pertinent factors, the following:

(1) The priority score assigned to the application by an NIH peer review

group as described in paragraph (b) of this section;

(2) The relevance of the project for which construction is proposed to the objectives and priorities of the particular program authorized by the Act;

(3) The scientific merit of the research activities that will be carried out in the proposed facility;

(4) The scientific or professional standing or reputation of the applicant and of its existing or proposed officers and research staff;

(5) The availability, by affiliation or other association, of other scientific or health personnel and facilities to the extent necessary to carry out effectively the program proposed for the facility, including the adequacy of an acceptable biohazard control and containment program when warranted;

(6) The need for the facility and its total effects on similar or related facilities in the locale, and the need for appropriate geographic distribution of similar facilities; and

(7) The financial need of the applicant.

(b) The priority score of the application shall be based, among other pertinent factors, on the following criteria:

(1) The scientific merit of the total program and its component parts to be carried out in the facility;

(2) The administrative and leadership capabilities of the applicant's officers and staff;

(3) The organization of the applicant's research program and its relationship with the applicant's overall research programs;

(4) The anticipated effect of the project on other relevant research programs and facilities in the geographic area, and nationwide;

(5) The need for the project or additional space; and

(6) The project cost and design.

§ 52b.6 What is the rate of federal financial participation?

(a) Unless otherwise specified by statute, the rate of federal financial participation in a construction project supported by a grant under this part shall not be more than 50 percent of the necessary allowable costs of construction as determined by the Director, except that when the Director finds good cause for waiving this limitation, the amount of the construction grant may be more than 50 percent of the necessary allowable costs of construction.

(b) Subject to paragraph (a) of this section, the Director shall set the actual rate of federal financial participation in the necessary allowable costs of construction, taking into consideration the most effective use of available federal funds to further the purposes of the applicable provisions of the Act.

§ 52b.7 How is the grantee obligated to use the facility?

(a) The grantee shall use the facility (or that portion of the facility supported by a grant under this part) for its originally authorized purpose so long as needed for that purpose, or other period prescribed by statute, unless the grantee obtains advance approval from the Director, in the form and manner as the Director may prescribe, to use the facility for another purpose. Use for other purposes shall be limited as prescribed in § 52b.9(c)(2).

(b) The Director, in determining whether to approve an alternative use of the facility, shall take into consideration the extent to which:

(1) The facility will be used by the grantee or other owner for a purpose described in § 52b.9(c)(2); or

(2) There are reasonable assurances that alternative facilities not previously used for NIH supported research will be utilized to carry out the original purpose as prescribed in § 52b.9(c)(1).

(c) *Sale or transfer*. In the form and manner as the Director may prescribe, the grantee may request the Director's approval to sell the facility or transfer title to a third party eligible under § 52b.3 for continued use of the facility for an authorized purpose in accordance with paragraphs (a) and (b) of this section. If approval is permissible under the Act or other federal statute and is granted, the terms of the transfer shall provide that the transferee shall assume all the rights and obligations of the transferor set forth in 45 CFR part 74, the regulations of this part, and the other terms and conditions of the grant.

§52b.8 How will NIH monitor the use of facilities constructed with federal funds?

NIH may monitor the use of each facility constructed with funds awarded under this part to ensure its continued use for the originally authorized research purpose, by means of reviewing periodic facility use certifications or reports, site visits, and other appropriate means.

§52b.9 What is the right of the United States to recover Federal funds when facilities are not used for research or are transferred?

(a) If the grantee plans to cease using the facility for the particular biomedical research or training purposes for which it was constructed as required by §52b.7 (or alternate use authorized under §52b.7(a) or paragraph (c) of this section), or the grantee decides to sell or transfer title to an entity ineligible for a grant under §52b.3, the grantee shall request disposition instructions from NIH in the form and manner as the Director may prescribe. Those instructions shall provide for one of the following alternatives:

(1) The facility may be sold and the grantee or transferee shall pay to the United States an amount computed by multiplying the federal share of the facility times the proceeds from the sale (after deducting the actual and reasonable selling and fix-up expenses, if any, from the sales proceeds). The sales procedures must provide for competition to the extent practicable, and be designed to provide the highest possible return;

(2) The grantee may retain title and shall pay to the United States an amount computed by multiplying the current fair market value of the facility by the federal share of the facility; or

(3) The grantee shall transfer the title to either the United States or to an eligible non-federal party approved by the Director. The grantee shall be entitled to be paid an amount computed by multiplying the current fair market value of the facility by the nonfederal share of the facility.

(b) The grantee or transferor of a facility which is sold or transferred, or the owner of a facility the use of which has changed, as described in paragraph (a) of this section, shall report that action in writing to the Director not later than 10 days from the date on which the sale, transfer, or change occurs, in the form and manner as the Director may prescribe.

(c) In lieu of disposition of a facility pursuant to the provisions of paragraph (a) of this section, the Director may, for good cause, supported by assurances provided by the grantee or transferee, approve one of the following alternatives:

(1) Transfer of the remaining usage obligation to facilities of substantially comparable or greater value or utility, to carry out the biomedical research or training purpose for which the grant was awarded. In this event, the remaining usage obligation shall be released from the original facility constructed with grant funds and transferred to the new facility, and the grantee shall remain subject to all other requirements imposed under this part with respect to the new facility; or

(2) Use the facility for as long as needed, in order of priority, for one of the following purposes:

(i) For other health related activities consistent with the purposes of one or more of the activities of the awarding institute as authorized under title IV or other provisions of the Act;

(ii) To provide training and instruction in the health fields for health professionals or health related information programs for the public; or

(iii) Other health related purposes consistent with one or more of the purposes authorized under the Act.

(d) The right of recovery of the United States set forth in paragraph (a) of this section shall not, prior to judgment, constitute a lien on any facility supported in whole or in part by a federal grant, including a construction grant under this part.

(e) Any amount required to be paid to the United States under this section will be paid to the awarding institute for disposition as required by law.

(Approved by the Office of Management and Budget under Control Number 0925–0424; expires November 30, 2001)

§ 52b.10 What are the terms and conditions of awards?

In addition to any other requirement imposed by law or determined by the Director to be reasonably necessary to fulfill the purposes of the grant, each construction grant shall be subject to the terms and conditions and the grantee assurances required by this section, supported by such documentation as the Director may reasonably require. The Director may, by general policy or for good cause shown by an applicant, approve exceptions to these terms and conditions or assurances where the Director finds that the exceptions are consistent with the applicable provisions of the Act and the purposes of the particular program:

(a) *Title.* The applicant must have a fee simple or other estate or interest in the site, including necessary easements and rights-of-way, sufficient to assure for the estimated useful life of the facility, as determined by the Director, undisturbed use and possession for the purpose of the construction and operation of the facility.

(b) *Plans and specifications.* Approval by the Director of the final working drawings, specifications, and cost estimates must be obtained before the project is advertised or placed on the market for bidding. The approval must include a determination by the Director that the final plans and specifications conform to the minimum standards of construction and equipment as set forth in § 52b.12.

(c) *Relocation assistance.* An applicant with an approved project which involves the displacement of persons or businesses shall comply with the provisions of the Uniform Relocation Assistance and Real Property Acquisition Policies Act of 1970, as amended (42 U.S.C. 4601 *et seq.*) and the applicable regulations issued under that Act (45 CFR part 15; 49 CFR part 24).

(d) *Approval of changes in estimated cost.* Unless approved by the Director, the applicant shall not enter into any construction contracts for the project or a part of the project, the cost of which exceeds the estimated cost approved in the terms of an award for that portion of the work covered by the plans and specifications. Exceptions shall be requested in the form and manner as the Director may prescribe.

(e) *Completion responsibility.* The applicant must construct the project, or cause it to be constructed, to final completion in accordance with the grant application, the terms and conditions of the award, and the approved plans and specifications.

(f) *Construction schedule inspection.* Prior to the start of construction, the grantee shall submit an approved copy of the construction schedule (critical path method) to the Director in the form and manner as the Director may prescribe.

(g) *Construction management.* The applicant must provide and maintain competent and adequate construction management services for inspection at the construction site to ensure that the completed work conforms with the approved plans and specifications. Construction management services shall include daily construction logs and monthly status reports which shall be maintained at the job site and shall be submitted to the Director at the times and in the form and manner as the Director may prescribe.

(h) *Nonfederal share.* Sufficient funds must be available to meet the nonfederal share of the costs of constructing the facility.

(i) *Funds for operation.* Sufficient funds must be available when construction is completed for effective use of the facility for the purposes for which it is being constructed.

(j) *Inspection.* The Director and the Director's representatives shall have access at all reasonable times to all work areas and documents during any stage of construction and the contractor shall provide proper facilities for this access and inspection.

(k) *Accessibility to handicapped persons.* The facility must be designed to comply with the Uniform Federal Accessibility Standards (41 CFR part 101–19, subpart 101–19.6, Appendix A), as modified by other standards prescribed by the Director or the Administrator of General Services. The applicant shall conduct inspections to ensure compliance with these specifications by the contractor.

(l) *Notice of Federal Interest.* The grantee shall record a Notice of Federal Interest in the appropriate official land records of the jurisdiction in which the property is located.

(m) *Title insurance.* The grantee shall purchase a title insurance policy unless a legal opinion has been provided which certifies that the grantee institution has fee simple title to the site free and clear of all liens, easements, rights-of-way, and any other adverse interests which would encumber the project. The Director may waive this requirement upon a request from the grantee adequately documenting self-insurance against the risks involved and containing such other information as the Director may prescribe.

(n) *Physical destruction insurance.* At the time construction is completed or at the time of beneficial occupancy, whichever comes first, the grantee shall purchase an insurance policy which insures the facility for the full appraised value of the property using state certified appraisers. The insurance policy must protect the property from total and partial physical destruction. The insurance policy must be maintained throughout the period of federal interest. The Director may waive this requirement upon a written request from the grantee adequately documenting self-insurance against the risks involved and containing such other information as the Director may prescribe.

(Approved by the Office of Management and Budget under Control Number 0925–0424; expires November 30, 2001)

§ 52b.11 What are the requirements for acquisition and modernization of existing facilities?

Grant awards for the acquisition and modernization of existing facilities are permitted if authorized by the statutes authorizing the construction grant program and shall be subject to the requirements of this section.

(a) *Minimum standards of construction and equipment.* A determination by the Director that the facility conforms (or upon completion of any necessary construction will conform) to the minimum standards of construction and equipment as set forth in § 52b.12 shall be obtained before entering into a final or unconditional contract for the acquisition and/or modernization of facilities. Where the Director finds that exceptions to or modifications of these minimum standards would be consistent with the purposes of the applicable section of the Act under which the acquisition or modernization is supported, the Director may authorize the exceptions or modifications.

(b) *Estimated cost of acquisition and remodeling: suitability of facility.* Each application for a project involving the acquisition of existing facilities shall include in the detailed estimates of the costs of the project, the cost of acquiring the facilities, and any cost of remodeling, renovating or altering the facilities to serve the purposes for which they are acquired. The application shall demonstrate to the satisfaction of the Director that the architectural, mechanical, electrical, plumbing, structural, and other pertinent features of the facility, as modified by any proposed expansion, remodeling, renovation, or alteration, will be suitable for the purposes of the applicable sections of the Act.

(c) *Bona fide sale.* Grant awards for the acquisition of existing facilities shall be subject to the condition that the acquisition constitutes a bona fide sale involving an actual cost to the applicant and will result in additional or improved facilities for purposes of the applicable provisions of the Act.

(d) *Facility previously funded by a federal grant.* No grant for the acquisition or modernization of a facility which has previously been funded in whole or in part by a federal grant for construction, acquisition, or equipment shall serve either to reduce or restrict the liability of the applicant or any other transferor or transferee from any obligation of accountability imposed by the Federal Government by reason of the prior grant.

(Approved by the Office of Management and Budget under Control Number 0925–0424; expires November 30, 2001)

§ 52b.12 What are the minimum requirements of construction and equipment?

(a) *General.* In addition to being subject to other laws, regulations, executive orders, and policies referred to in

§ 52b.14, the standards set forth in this section have been determined by the Director to constitute minimum requirements of construction and equipment, including the expansion, remodeling, renovation, or alteration of existing buildings, and these standards, as may be amended, or any revisions or successors of these standards, shall apply to all projects for which federal assistance is requested under this part. The publications referenced in this section are hereby incorporated by reference and made a part of the regulations in this part.

(b) *Incorporation by reference.* The Director of the Federal Register approves the incorporations by reference in paragraph (c) of this section in accordance with 5 U.S.C. 552(a)(1) and 1 CFR part 51. Copies may also be obtained from the organizations at the addresses listed in paragraph (c) of this section. Copies may be inspected at the National Cancer Institute, Executive Plaza North, Room 539, 6130 Executive Boulevard, Rockville, MD 20852 (telephone 301–496–8534; not a toll-free number); the National Center for Research Services, Building 31, Room 3B11, 9000 Rockville Pike, Bethesda, MD 20892 (telephone 301–496–5793); not a toll-free number); and at the National Archives and Records Administration (NARA). For information on the availability of this material at NARA, call 202–741–6030, or go to: *http://www.archives.gov/federal_register/code_of_federal_regulations/ibr_locations.html.* The Director may for good cause shown, approve plans and specifications which contain deviations from the requirements prescribed in paragraph (c) of this section, if the Director is satisfied that the purposes of the requirements have been fulfilled. In addition to these requirements, each project shall meet the requirements of the applicable state and local codes and ordinances relating to construction.

(c) *Design and construction standards.* The facility shall comply with the following mandatory design and construction standards:

(1) ''Guidelines for Design and Construction of Hospital and Health Care Facilities'' (1996–97). American Institute of Architects Academy of Architecture for Health (AIA); available from AIA Rizzoli Catalogue Sales, 117 Post Street, San Francisco, CA 94108 (telephone 1–800–522–6657, fax 415–984–0024).

(2) 1995 ASHRAE Handbook: Heating, Ventilating, and Air Conditioning Applications (1995), Chapter 13, ''Laboratory Systems.'' American Society of Heating, Refrigerating and Air Conditioning Engineers, Inc., 1791 Tullie Circle, NE, Atlanta, GA 30329 (telephone 404–636–8400).

(3) ICBO ''Uniform Building Code,'' Volumes 1–3 (1997). International Conference of Building Officials (ICBO), 5360 South Workman Mill Road, Whittier, CA 90601–2298 (telephone 562–699–0541 or 800–284–4406).

(4) BOCA National Building Code (1996) 1998 Supplement, Building Officials and Code Administrators International, Inc. (BOCA), 4051 West Fossmoor Road, Country Club Hills, IL 60478–5795 (telephone 708–799–4981; fax 708–799–4981).

(5) ''Recommended Lateral Force Requirements and Commentary'' (1996). Structural Engineers Association of California; available from International Conference of Building Officials, 5360 South Workman Mill Road, Whittier, CA 90601–2298 (telephone 562–699–0541).

(6) ''Prudent Practices in the Laboratory: Handling and Disposal of Chemicals'' (1995). National Research Council; available from National Academy Press, 8700 Spectrum Drive, Landover, MD 20785 (telephone 1–800–624–6242).

(7) The following material is available for purchase from the National Fire Protection Association (NFPA), 11 Tracy Drive, Avon, MA 02322–9908 (telephone 617–770–3000 or 1–800–735–0100):

(i) NFPA 45, ''Standard on Protection for Laboratories Using Chemicals'' (1996).

(ii) NFPA 70, ''National Electric Code'' (1996).

(iii) NFPA 99, Chapter 4, ''Gas and Vacuum Systems'' (1996).

(iv) NFPA 101, ''Life Safety Code'' (1997).

(v) NFPA ''Health Care Facilities Handbook'' (1996).

(8) NSF Standard No. 49 for Class II (Laminar Flow) Biohazard Cabinetry (1992). National Sanitation Foundation

(NSF), 3475 Plymouth Road, Box 1468, Ann Arbor, MI 48106 (telephone 734–769–9010).

(9) ACGIH ''Industrial Ventilation: A Manual of Recommended Practice'' (1998). American Conference of Governmental Industrial Hygienists (ACGIH), 1330 Kemper Meadow Drive, Cincinnati, OH 45240–1634 (telephone 513–742–2020).

(10) AIHA ''Laboratory Ventilation Workbook'' (1994). American Industrial Hygiene Association (AIHA), 2700 Prosperity Avenue, Suite 250, Fairfax, VA 22031 (telephone 703–849–8888).

(11) The following material is available for purchase from the Southern Building Code Congress (SBCC), 900 Montclair Road, Birmingham, AL 35213–1206 (telephone 205–591–1853; fax 202–591–0075:

(i) SBCC ''International Standard Plumbing Code'' (1997).

(ii) SBCC ''Standard Building Code'' (1997).

[64 FR 63722, Nov. 22, 1999, as amended at 69 FR 18803, Apr. 9, 2004]

§ 52b.13 Additional conditions.

The Director may with respect to any grant award impose additional conditions consistent with the regulations of this part prior to or at the time of any award when in the Director's judgment the conditions are necessary to assure or protect advancement of the approved project, the purposes of the applicable provisions of the Act, or the conservation of grant funds.

§ 52b.14 Other federal laws, regulations, executive orders, and policies that apply.

Other federal laws, regulations, executive orders, and policies apply to grants under this part. These include, but are not necessarily limited to:

(a) *Laws.*

An Act to Provide for the Preservation of Historical and Archeological Data (and other purposes), as amended (16 U.S.C. 469 *et seq.*).

Architectural Barriers Act of 1968, as amended (42 U.S.C. 4151 *et seq.*).

Earthquake Hazards Reduction Act of 1977, as amended (42 U.S.C. 7701 *et seq.*).

Flood Disaster Protection Act of 1973, section 202, as amended (42 U.S.C. 4106).

National Historic Preservation Act, section 106, as amended (16 U.S.C. 470f).

Safe Drinking Water Act, as amended (42 U.S.C. 300f *et seq.*).

(b) *Regulations.*

9 CFR part 3—Standards (Animal Welfare).

29 CFR 1910.1450—Occupational exposure to hazardous chemicals in laboratories.

36 CFR part 1190—Minimum guidelines and requirements for accessible design.

41 CFR part 101–19, subpart 101–19.6—Accommodations for the physically handicapped.

41 CFR part 101–19, subpart 101–19.6, Appendix A—Uniform Federal accessibility standards.

42 CFR part 50, subpart A—Responsibility of PHS awardee and applicant institutions for dealing with and reporting possible misconduct in science.

42 CFR part 50, subpart D—Public Health Service grant appeals procedure.

45 CFR part 15—Uniform relocation assistance and real property acquisition for Federal and federally assisted programs.

45 CFR part 16—Procedures of the Departmental Grant Appeals Board.

45 CFR part 46—Protection of human subjects.

45 CFR part 74—Uniform administrative requirements for awards and subawards to institutions of higher education, hospitals, other nonprofit organizations, and commercial organizations; and certain grants and agreements with states, local governments and Indian tribal governments.

45 CFR part 76—Governmentwide debarment and suspension (nonprocurement) and governmentwide requirements for drug-free workplace (grants).

45 CFR part 80—Nondiscrimination under programs receiving Federal assistance through the Department of Health and Human Services—effectuation of title VI of the Civil Rights Act of 1964.

45 CFR part 81—Practice and procedure for hearings under part 80 of this chapter.

45 CFR part 84—Nondiscrimination on the basis of handicap in programs and activities receiving Federal financial assistance.

45 CFR part 86—Nondiscrimination on the basis of sex in education programs and activities receiving or benefitting from Federal financial assistance.

45 CFR part 91—Nondiscrimination on the basis of age in HHS programs or activities receiving Federal financial assistance.

45 CFR part 92—Uniform administrative requirements for grants and cooperative agreements to State and local governments.

45 CFR part 93—New restrictions on lobbying.

49 CFR part 24—Uniform relocation assistance and real property acquisition for Federal and federally assisted programs.

(c) *Executive orders.*

Executive Order 11988, Floodplain Management (May 24, 1977)(3 CFR, 1977 Comp., p. 117).

Executive Order 11990, Protection of Wetlands (May 24, 1977)(3 CFR, 1977 Comp., p. 121).

Executive Order 12699, Seismic Safety of Federal and Federally Assisted or Regulated New Building Construction (January 5, 1990)(3 CFR, 1990 Comp., p. 269).

(d) *Policies.* (1) Design Policy and Guidelines (1996). Division of Engineering Services, National Institutes of Health (NOTE: To obtain copies of the policy, interested persons should contact the Division of Engineering Services, 9000 Rockville Pike, Building 13, Room 2E43, Bethesda, MD 20892 (telephone 301–496–6186; not a toll-free number) or visit the following site on the World Wide Web (*http://des.od.nih/gov/nihpol.html*).).

(2) NIH Guidelines on the Inclusion of Women and Minorities as Subjects in Clinical Research (1994) (NOTE: To obtain copies of the policy, interested persons should contact the Office of Research on Women's Health, NIH, Room 201, Building 1, MSC 0161, Bethesda, MD 20892–0161 (telephone 301–402–1770; not a toll-free number).).

(3) NIH Guidelines for Research Involving Recombinant DNA Molecules (1994) (NOTE: To obtain copies of the policy, interested persons should contact the Office of Recombinant DNA Activities, NIH, 6000 Executive Boulevard, Suite 323, MSC 7010, Bethesda, MD 20892–7010 (telephone 301–496–9838; not a toll-free number).).

(4) ''NIH Grants Policy Statement.'' NIH Pub. No. 99–80 (Oct. 1998) (Note: To obtain copies of the policy, interested persons should contact the Extramural Outreach and Information Resources Office (EOIRO), Office of Extramural Research, NIH, 6701 Rockledge Drive, Room 6208, MSC 7910, Bethesda, MD 20892–7910 (telephone 301–435–0714; not a toll-free number). Information may also be obtained by contacting the EOIRO via its e-mail address (*asknih@odrockml.od.nih.gov*) and by browsing the NIH Home Page site on the World Wide Web (*http://www.nih.gov*).).

(5) ''Guide for the Care and Use of Laboratory Animals (1996). Institute of Laboratory Animal Resources, Commission on Life Sciences, National Research Council (NOTE: To obtain copies of the policy, interested persons should contact the Office for Protection from Research Risks, NIH, 6100 Executive Boulevard, Suite 3B01, MSC 7507, Rockville, MD 20852–7507 (telephone 301–496–7005; not a toll-free number).).

(6) ''Public Health Service Policy on Humane Care and Use of Laboratory Animals.'' (Rev. Sept. 1986). Office for Protection from Research Risks, NIH (Note: To obtain copies of the policy, interested persons should contact the Office for Protection from Research Risks, NIH, 6100 Executive Boulevard, Suite 3B01, MSC 7507, Rockville, MD 20852–7507 (telephone 301–496–7005; not a toll-free number).).

(7) ''Biosafety in Microbiological and Biomedical Laboratories.'' DHHS Publication No. (CDC) 88–8395 (1993). Centers for Disease Control and Prevention (CDC) (NOTE: To obtain copies of the policy, interested persons should contact the Division of Safety, Occupational Safety and Health Branch, NIH, 13 South Drive, Room 3K04, MSC 5760, Bethesda, MD 20892–5760 (telephone 301–496–2960; not a toll-free number).).

(8) ''NIH Guidelines for the Laboratory Use of Chemical Carcinogens,'' DHHS Publication No. (NIH) 81–2385 (May 1981) (NOTE: To obtain copies of the policy, interested persons should contact the Division of Safety, Occupational Safety and Health Branch, NIH, 13 South Drive, Room 3K04, MSC 5760, Bethesda, MD 20892–5760 (telephone 301–496–2960; not a toll-free number).).

(9) ''NIH Policy and Guidelines on the Inclusion of Children as Participants in Research Involving Human Subjects (March 6, 1998).'' NIH Guide for Grants and Contracts (NOTE: To obtain copies of the policy, interested persons should contact the Office of Extramural Research, NIH, 6701 Rockledge Drive, Room 6208, MSC 7910, Bethesda, MD 20817–7910 (telephone 301–435–0714; not a toll-free number). Information may also be obtained by browsing the NIH Home Page site on the World Wide Web (*http://www.nih.gov*).).

PART 52c—MINORITY BIOMEDICAL RESEARCH SUPPORT PROGRAM

Sec.
52c.1 Applicability.
52c.2 Definitions.
52c.3 Eligibility.
52c.4 Application.
52c.5 Grant awards.
52c.6 Expenditure of grant funds.
52c.7 Other HHS regulations that apply.
52c.8 Additional conditions.

AUTHORITY: 42 U.S.C. 216, 241(a)(3).

SOURCE: 45 FR 12246, Feb. 25, 1980, unless otherwise noted.

§52c.1 Applicability.

The regulations in this part apply to grants (under the Minority Biomedical Research Support Program) awarded in accordance with section 301(a)(3) of the Public Health Service (PHS) Act (42 U.S.C. 241(a)(3)) to increase the numbers of ethnic minority faculty, students, and investigators engaged in biomedical research, and to broaden the opportunities for participation in biomedical research of ethnic minority faculty, students, and investigators, by providing general support for biomedical research programs at eligible institutions.

[58 FR 61030, Nov. 19, 1993]

§52c.2 Definitions.

As used in this part:

Act means the Public Health Service Act, as amended (42 U.S.C. 201 *et seq.*).

Ethnic minorities includes but is not limited to such groups as Black Americans, Hispanic Americans, Asian/Pacific Islanders, and American Indians/Native Alaskans (Native Americans).

HHS means the Department of Health and Human Services.

Nonprofit as applied to any institution means an institution which is a corporation or association no part of the net earnings of which inures or may lawfully inure to the benefit of any private shareholder or individual.

Program director means a single individual, designated in the grant application, who is scientifically trained and has research experience and who is responsible for the overall execution of the program supported under this part at the grantee institution.

Secretary means the Secretary of Health and Human Services and any other officer or employee of the Department of Health and Human Services to whom the authority involved has been delegated.

[58 FR 61030, Nov. 19, 1993]

§52c.3 Eligibility.

To be eligible for a grant under this Program, an applicant must be:

(a) One of the following:

(1) A public or private nonprofit university, four year college, or other institution offering undergraduate, graduate, or health professional degrees, with a traditionally high (more than 50 percent) minority student enrollment;

(2) A public or private nonprofit two year college with a traditionally high (more than 50 percent) minority student enrollment;

(3) A public or private nonprofit university, four year college, or other institution offering undergraduate, graduate, or health professional degrees, with a student enrollment a significant proportion (but not necessarily more than 50 percent) of which is derived from ethnic minorities, provided the Secretary determines that said institution has a demonstrated commitment to the special encouragement of and assistance to ethnic minority faculty, students, and investigators; or

(4) An Indian tribe which has a recognized governing body which performs substantial governmental functions, or an Alaska Regional Corporation as defined in the Alaska Native Claims Settlement Act (43 U.S.C. 1601 *et seq.*), and

(b) Located in a State, the District of Columbia, Puerto Rico, the Virgin Islands, the Canal Zone, Guam, American Samoa, or the successor States of the Trust Territory of the Pacific Islands (the Federated States of Micronesia, the Republic of the Marshall Islands, and the Republic of Palau).

[45 FR 12246, Feb. 25, 1980; 45 FR 20096, Mar. 27, 1980; 58 FR 61030, Nov. 19, 1993]

§52c.4 Application.

An institution interested in applying for a grant under this part must submit an application at the time and in the

form and manner that the Secretary may prescribe.

[58 FR 61030, Nov. 19, 1993]

§ 52c.5 Grant awards.

(a) Within the limits of funds available, and upon such recommendation as may be required by law, the Secretary shall award grants to those applications with proposed biomedical research programs which will, in the Secretary's judgment, best promote the purposes of this part, taking into consideration among other pertinent factors:

(1) The benefits that can be expected to accrue to the national effort in biomedical research and in increasing the pool of biomedical researchers;

(2) The institution's capability, from a scientific and technical standpoint, to engage in biomedical research;

(3) The benefits that can be expected to accrue to the institution and its students;

(4) The administrative and managerial capability and competence of the applicant;

(5) The availability of the facilities and resources (including where necessary collaborative arrangements with other institutions) to engage in biomedical research;

(6) The applicant's relative need for funding; and

(7) The overall significance of the proposal in terms of numbers of ethnic minority persons benefited thereby.

(b) The notice of grant award specifies how long HHS intends to support the project without requiring the project to recompete for funds. This period, called the project period, will usually be for 1–5 years.

(c) Generally the grant will initially be for one year and subsequent continuation awards will also be for one year at a time. A grantee must submit a separate application to have the support continued for each subsequent year. Decisions regarding continuation awards and the funding level of such awards will be made after consideration of such factors as the grantee's progress and management practices, and the availability of funds. In all cases, continuation awards require a determination by HHS that continued funding is in the best interest of the government.

(d) Neither the approval of any application nor the award of any grant commits or obligates the United States in any way to make any additional, supplemental, continuation, or other award with respect to any approved application or portion of an approved application.

[45 FR 12246, Feb. 25, 1980; 45 FR 20096, Mar. 27, 1980; 58 FR 61030, Nov. 19, 1993]

§ 52c.6 Expenditure of grant funds.

(a) Any funds granted pursuant to this part shall be expended solely for the purposes for which the funds were granted in accordance with the approved application and budget, the regulations of this part, the terms and conditions of the award, and the applicable cost principles prescribed by subpart Q of 45 CFR part 74.

(b) The Secretary may permit unobligated grant funds remaining in the grant account at the close of a budget period to be carried forward for obligation during a subsequent budget period, provided a continuation award is made for that period and the Secretary's written approval is obtained. The amount of any subsequent award will take into consideration unobligated grant funds remaining in the grant account.

[45 FR 12246, Feb. 25, 1980; 45 FR 20096, Mar. 27, 1980; 45 FR 68392, Oct. 15, 1980]

§ 52c.7 Other HHS regulations that apply.

Several other regulations and policies apply to grants under this part. These include, but are not necessarily limited to:

37 CFR part 401—Rights to inventions made by nonprofit organizations and small business firms under government grants, contracts, and cooperative agreements

42 CFR part 50, subpart A—Responsibilities of PHS awardee and applicant institutions for dealing with and reporting possible misconduct in science

42 CFR part 50, subpart D—Public Health Service grant appeals procedures

45 CFR part 16—Procedures of the Departmental Grant Appeals Board

45 CFR part 46—Protection of human subjects

45 CFR part 74—Administration of grants

45 CFR part 75—Informal grant appeals procedures
45 CFR part 76—Governmentwide debarment and suspension (nonprocurement) and governmentwide requirements for drug-free workplace (grants)
45 CFR part 80—Nondiscrimination under programs receiving Federal assistance through the Department of Health and Human Services Effectuation of Title VI of the Civil Rights Act of 1964
45 CFR part 81—Practice and procedure for hearings under part 80 of this title
45 CFR part 84—Nondiscrimination on the basis of handicap in programs and activities receiving Federal financial assistance
45 CFR part 86—Nondiscrimination on the basis of sex in education programs and activities receiving or benefiting from Federal financial assistance
45 CFR part 91—Nondiscrimination on the basis of age in HHS programs and activities receiving Federal financial assistance
45 CFR part 92—Uniform administrative requirements for grants and cooperative agreements to State and local governments
45 CFR part 93—New restrictions on lobbying
51 FR 16958, or successor—NIH Guidelines for Research Involving Recombinant DNA Molecules
"Public Health Service Policy on Humane Care and Use of Laboratory Animals," Office for Protection from Research Risks, NIH (Revised September 1986), or successor

[58 FR 61030, Nov. 19, 1993]

§ 52c.8 Additional conditions.

The Secretary may with respect to any grant award impose additional conditions prior to or at the time of any award when in the Secretary's judgment those conditions are necessary to assure or protect advancement of the approved program, the interests of the public health, or the conservation of grant funds.

PART 52d—NATIONAL CANCER INSTITUTE CLINICAL CANCER EDUCATION PROGRAM

Sec.
52d.1 Applicability.
52d.2 Definitions.
52d.3 Eligibility.
52d.4 Application.
52d.5 Program requirements.
52d.6 Grant awards.
52d.7 Expenditure of grant funds.
52d.8 Other HHS regulations that apply.
52d.9 Additional conditions.

AUTHORITY: Sec. 215, 58 Stat. 690, as amended, 63 Stat. 835 (42 U.S.C. 216); sec. 404(a)(4), 92 Stat. 3426 (42 U.S.C. 285).

SOURCE: 45 FR 12247, Feb. 25, 1980, unless otherwise noted.

§ 52d.1 Applicability.

The regulations in this part apply to grants under the Clinical Cancer Education Program authorized by section 404(a)(4) of the Public Health Service Act, to encourage planning and development of multidisciplinary educational programs aimed at achieving optimal care of cancer patients and to enable students in the health professions to acquire basic knowledge of neoplastic disease and the preventive measures and diagnostic and therapeutic skills necessary to the provision of such care.

§ 52d.2 Definitions.

(a) *Act* means the Public Health Service Act, as amended.

(b) *Director, NCI*, means the Director of the National Cancer Institute and any other officer or employee of said Institute to whom the authority involved has been delegated.

(c) [Reserved]

(d) *Board* means the National Cancer Advisory Board established by section 407 of the Act (42 U.S.C. 286b).

(e) *Affiliated teaching hospital* means a hospital which, although not owned by such school, has a written agreement with a school of medicine, osteopathy, dentistry, or public health eligible for assistance under this part, providing for effective control by the school of the teaching in the hospital.

(f) *Specialized cancer institute* means an institution which has as its primary mission the diagnosis, prevention, or treatment of cancer.

[45 FR 12247, Feb. 25, 1980; 45 FR 20096, Mar. 27, 1980, as amended at 47 FR 53012, Nov. 24, 1982]

§ 52d.3 Eligibility.

To be eligible for a grant under this part, an applicant must be:

(a) A public or private school of medicine, osteopathy, dentistry, or public health, affiliated teaching hospital, or specialized cancer institute; and

(b) Located in a State, the District of Columbia, Puerto Rico, the Virgin Islands, the Canal Zone, Guam, American Samoa, or the Trust Territory of the Pacific Islands.

[45 FR 12247, Feb. 25, 1980, as amended at 47 FR 53012, Nov. 24, 1982]

§ 52d.4 Application.

(a) Application for a grant under this subpart shall be made on an authorized form.[1] Applicants shall submit completed forms, on or before the dates the Director, NCI, may prescribe.

(b) [Reserved]

(c) In addition to any other pertinent information that the Director, NCI, may require, each application shall set forth in detail:

(1) A program plan defining the objectives of the proposed program and the means by which these objectives would be achieved, including descriptions of:

(i) The general educational level (e.g., pre-doctoral, post-doctoral) of the students to be involved in the program;

(ii) The proposed course of study and its relation to the diagnosis, prevention, control, and treatment of cancer;

(iii) The clinical experiences to be provided to the students;

(iv) Multidisciplinary aspects of the program;

(v) The particular schools or branches within the institution which would have responsibility for individual aspects of the program; and

(vi) The teaching mechanisms to be employed, including specific discussion of those techniques which would be innovative.

(2) The availability of personnel, facilities, and resources needed to carry out the program;

(3) The names, qualifications, and proposed duties of the program director and any staff members who would be responsible for the program, including a description of those duties which would actually be carried out by the program director and those which would be shared with or assigned to others;

(4) The names and qualifications of proposed members of a cancer education committee which would be established by the applicant to advise it on the planning, organization, operation and evaluation of the program and the specific duties which would be assigned to said committee;

(5) Insofar as necessary, cooperative arrangements with other schools, hospitals, and institutions which would participate in the program;

(6) The proposed project period, a detailed budget for the first budget period including a list of other anticipated sources of support and anticipated total needs for each of the succeeding budget periods of the requested project period, and a justification for the amount of grant funds requested;

(7) Proposed methods for monitoring and evaluating the program; and

(8) A description of how the education and training effort will be sustained upon expiration of the award.

[45 FR 12247, Feb. 25, 1980, as amended at 47 FR 53012, Nov. 24, 1982]

§ 52d.5 Program requirements.

(a) If the program is to be offered at the graduate level, it must be multidisciplinary in scope involving at least two or more clinical or preclinical sciences relating to cancer;

(b) The cancer education committee provided for in the approved application must meet at least four times per year, and must be chaired by the program director.

§ 52d.6 Grant awards.

(a) Within the limits of funds available, after consultation with the Board, the Director, NCI, may award grants to applicants with proposed programs which in the NCI Director's judgment best promote the purposes of this part, taking into consideration among other pertinent factors:

(1) The relevance of the proposed program to the objectives of this part;

(2) The extent to which the program would involve innovative teaching techniques;

(3) The availability of adequate staff, facilities, and resources (including

[1] Applications and instructions are available from the Division of Cancer Research Resources and Centers, Education Branch, Westwood Building, 5333 Westbard Avenue, Bethesda, MD 20205.

where necessary cooperative arrangements with other institutions or hospitals) to carry out the program;

(4) The qualifications and experience of the program director;

(5) The authority of the program director to ensure that the program is planned with multidisciplinary input and that multidisciplinary aspects of the program are carried out;

(6) The extent to which the cancer education committee is broadly representative of the disciplines concerned with cancer care and teaching and is allowed to participate in the planning, organization, operation, and evaluation of the program;

(7) If the program is to be offered at the pre-doctoral level, the extent to which its objectives are designed to aid students:

(i) To acquire a basic understanding of fundamental principles of cancer biology, epidemiology, detection, diagnosis, prevention, treatment and control;

(ii) To interest students in learning more about cancer; and

(iii) To develop an appreciation of the need for a comprehensive multidisciplinary approach to the care of cancer patients;

(8) The administrative and managerial capability of the applicant;

(9) The reasonableness of the proposed budget in relation to the proposed program;

(10) The adequacy of the methods for monitoring and evaluating the program on a continuing basis; and

(11) The degree to which the application adequately provides for the requirements set forth in §52d.5.

(b) The notice of grant award specifies how long HHS intends to support the program without requiring the program to recompete for funds. This period, called the project period, will usually be for 1–5 years.

(c) Generally, the grant will initially be for one year and subsequent continuation awards will also be for one year at a time. A grantee must submit a separate application to have the support continued for each subsequent year. Decisions regarding continuation awards and the funding level of such awards will be made after consideration of such factors as the grantee's progress and management practices, and the availability of funds. In all cases, continuation awards require a determination by HHS that continued funding is in the best interest of the government.

(d) Neither the approval of any application nor the award of any grant commits or obligates the United States in any way to make any additional, supplemental, continuation, or other award with respect to any approved application or portion of an approved application.

§52d.7 Expenditure of grant funds.

(a) Any funds granted pursuant to this part shall be expended solely for the purposes for which the funds were granted in accordance with the approved application and budget, the regulations of this part, the terms and conditions of the awards, and the applicable cost principles prescribed by subpart Q of 45 CFR part 74, except that grant funds may not be used for costs incurred in connection with activities which, prior to the grant, were part of the grantee's standard curriculum.

(b) The Director, NCI, may permit unobligated grant funds remaining in the grant account at the close of a budget period to be carried forward for obligation during a subsequent budget period, provided a continuation award is made for that period and the NCI Director's written approval is obtained. The amount of any subsequent award will take into consideration unobligated grant funds remaining in the grant account.

§52d.8 Other HHS regulations that apply.

Several other regulations apply to grants under this subpart. These include, but are not limited to:

42 CFR part 50, subpart D—Public Health Service grant appeals procedure

45 CFR part 16—Procedures of the Departmental Grant Appeals Board

45 CFR part 74—Administration of grants

45 CFR part 75—Informal grant appeals procedures

45 CFR part 80—Nondiscrimination under programs receiving Federal assistance through the Department of Health and Human Services effectuation of title VI of the Civil Rights Act of 1964

45 CFR part 81—Practice and procedure for hearings under part 80 of this title
45 CFR part 84—Nondiscrimination on the basis of handicap in programs and activities receiving or benefiting from Federal financial assistance
45 CFR part 86—Nondiscrimination on the basis of sex in education programs and activities receiving or benefiting from Federal financial assistance
45 CFR part 91—Nondiscrimination on the basis of age in HHS programs or activities receiving Federal financial assistance

[49 FR 38111, Sept. 27, 1984]

§ 52d.9 Additional conditions.

The Director, NCI, may with respect to any grant award impose additional conditions prior to or at the time of any award when in the NCI Director's judgment those conditions are necessary to assure or protect advancement of the approved program, the interests of the public health, or the conservation of grant funds.

PART 52e—NATIONAL HEART, LUNG, AND BLOOD INSTITUTE GRANTS FOR PREVENTION AND CONTROL PROJECTS

Sec.
52e.1 To what programs do these regulations apply?
52e.2 Definitions.
52e.3 Who is eligible to apply?
52e.4 How to apply.
52e.5 What are the project requirements?
52e.6 How will NIH evaluate applications?
52e.7 What are the terms and conditions of awards?
52e.8 Other HHS regulations and policies that apply.
52e.9 Additional conditions.

AUTHORITY: 42 U.S.C. 216, 285b–1.

SOURCE: 45 FR 12249, Feb. 25, 1980, unless otherwise noted.

§ 52e.1 To what programs do these regulations apply?

(a) This part applies to grants under section 419 of the Act (42 U.S.C. 285b–1) for projects to:

(1) Demonstrate and evaluate the effectiveness of new techniques or procedures for the prevention and control of heart, blood vessel, lung, and blood diseases, with special consideration given to the prevention and control of these diseases in children, and in populations that are at increased risk with respect to such diseases;

(2) Develop and evaluate methods of educating health practitioners concerning the prevention and control of these diseases; and

(3) Develop and evaluate methods of educating the public concerning the prevention and control of these diseases.

(b) For purposes of this part, prevention and control projects shall include community-based and population-based programs carried out in cooperation with other Federal agencies, with public health agencies of State or local governments, with nonprofit private entities that are community-based health agencies, or with other appropriate public or nonprofit private entities.

[45 FR 12249, Feb. 25, 1980; 45 FR 20097, Mar. 27, 1980, as amended at 58 FR 54298, Oct. 21, 1993; 59 FR 59372, Nov. 17, 1994]

§ 52e.2 Definitions.

As used in this part:

Act means the Public Health Service Act, as amended (42 U.S.C. 201 *et seq.*).

Council means the National Heart, Lung, and Blood Advisory Council, established under section 406 of the Act (42 U.S.C. 284a).

Director means the Director of the National Heart, Lung, and Blood Institute and any official to whom the authority involved may be delegated.

Emergency medical services means the services utilized in responding to the perceived individual need for immediate medical care in order to prevent loss of life or aggravation of physiological or psychological illness or injury.

HHS means the Department of Health and Human Services.

National program means the National Heart, Blood Vessel, Lung, and Blood Diseases and Blood Resources Program referred to in section 421 of the Act (42 U.S.C. 285b–3).

Nonprofit as applied to any agency or institution means an agency or institution which is a corporation or an association, no part of the net earnings of which inures or may lawfully inure to the benefit of any private shareholder or individual.

PHS means the Public Health Service.

[58 FR 54298, Oct. 21, 1993]

§ 52e.3 Who is eligible to apply?

To be eligible for a grant under this part, an applicant must be a public or nonprofit private agency or institution.

[45 FR 12249, Feb. 25, 1980, as amended at 58 FR 54298, Oct. 21, 1993]

§ 52e.4 How to apply.

(a) Application for a grant under this subpart shall be made on an authorized form.[2] Applicants shall submit completed forms on or before the dates the Director may prescribe.

(b) Each private institution which does not already have on file with the National Institutes of Health evidence of nonprofit status, must submit with its application acceptable proof of such status.

(c) In addition to any other pertinent information that the Director may require each application shall set forth in detail:

(1) The nature and purpose of the proposed project and the methods to be employed in carrying it out;

(2) The relevance of the proposed project to the National Program;

(3) The defined population to participate in the proposed project and the rationale for its selection;

(4) With respect to applications relating to projects covered by § 52e.1(a)(1), prior research findings on which the proposed project is based;

(5) The personnel, facilities, and other resources, including community resources, available to carry out the proposed project;

(6) Current activities of the applicant involving prevention or control of heart, blood vessel, lung, and blood diseases, the sources of funding for such activities, and the anticipated relationship of these activities to the proposed project;

(7) The names and qualifications of the project director and key staff members who would be responsible for conducting the proposed project;

(8) Proposed methods for monitoring and evaluating the project; and

(9) The proposed project period; a detailed budget for the first budget period, including a list of other anticipated sources of support and anticipated total needs for each of the succeeding budget periods of the requested project period; and a justification for the amount of grant funds requested.

[45 FR 12249, Feb. 25, 1980, as amended at 58 FR 54298, Oct. 21, 1993]

§ 52e.5 What are the project requirements?

(a) An approvable application must demonstrate to the satisfaction of the Director that:

(1) With respect to applications relating to projects covered by § 52e.1(a)(1), the techniques or procedures to be demonstrated and evaluated have been found safe and effective in the research setting and, based upon research findings, appear to have the potential for general applicability to the prevention, diagnosis, or treatment of heart, blood vessel, lung, or blood diseases;

(2) With respect to applications relating to projects covered by § 52e.1(a)(2) and § 52e.1(a)(3), the project will include development and evaluation of one or more methods for educating health practitioners or the public concerning advances in the prevention, diagnosis, or treatment of such diseases; and

(3) The nature of the project is such that its completion may be anticipated within the project period, or such other period as may be specified in the application.

(b) The project must, in the judgment of the Director, be necessary for cooperation by the National Heart, Lung, and Blood Institute with one or more other Federal Health agencies, State, local or regional public health agencies, or nonprofit private health agencies in the diagnosis, prevention, or treatment of heart, blood vessel, lung or blood diseases.

[45 FR 12249, Feb. 25, 1980, as amended at 58 FR 54298 and 54299, Oct. 21, 1993]

[2] Applications and instructions are available from the Division of Extramural Affairs, National Heart, Lung, and Blood Institute, National Institutes of Health, 9000 Rockville Pike, Bethesda, MD 20205.

§ 52e.6 How will NIH evaluate applications?

(a) Within the limits of funds available, after consultation with the Council, the Director may award grants to applicants with proposed projects which in the Director's judgment will best promote the purposes of section 419 of the Act, taking into consideration among other pertinent factors:

(1) The scientific and technical merit of the proposed project;

(2) The significance of the project in relation to the goals of the National Program;

(3) Whether the project appropriately emphasizes the prevention, diagnosis, or treatment of heart, blood vessel, lung, or blood diseases of children;

(4) The qualifications and experience of the project director and other key personnel;

(5) The administrative and managerial capability and fiscal responsibility of the applicant;

(6) The reasonableness of the proposed budget in relation to the proposed project;

(7) The adequacy of the methods proposed for monitoring and evaluating the proposed project; and

(8) The degree to which the application adequately provides for the requirements set forth in §§ 52e.5(a) and 52e.5(b).

(b) The notice of grant award specifies how long HHS intends to support the project without requiring the project to recompete for funds. This period, called the project period, will usually be for 1–5 years.

(c) Generally, the grant will initially be for one year and subsequent continuation awards will also be for one year at a time. A grantee must submit a separate application to have the support continued for each subsequent year. Decisions regarding continuation awards and the funding level of such awards will be made after consideration of such factors as the grantee's progress and management practices, and the availability of funds. In all cases, continuation awards require a determination by HHS that continued funding is in the best interest of the government.

(d) Neither the approval of any application nor the award of any grant commits or obligates the United States in any way to make any additional, supplemental, continuation, or other award with respect to any approved application or portion of an approved application.

(e) Any funds granted under this part shall be expended solely for the purposes for which the funds were granted in accordance with the approved application and budget, the regulations of this part, the terms, and conditions of the award, and the applicable cost principles prescribed in subpart Q of 45 CFR part 74.

[45 FR 12249, Feb. 25, 1980, as amended at 58 FR 54298, Oct. 21, 1993]

§ 52e.7 What are the terms and conditions of awards?

(a) Any funds granted pursuant to this part shall be expended solely for the purposes for which the funds were granted in accordance with the approved application and budget, the regulations of this part, the terms and conditions of the award, and the applicable cost principles prescribed by subpart Q of 45 CFR part 74.

(b) The Director may permit unobligated grant funds remaining in the grant account at the close of a budget period to be carried forward for obligation during a subsequent budget period, provided a continuation award is made for that period and the NHLBI Director's written approval is obtained. The amount of any subsequent award will take into consideration unobligated grant funds remaining in the grant account.

[45 FR 12249, Feb. 25, 1980, as amended at 58 FR 54298 and 54299, Oct. 21, 1993]

§ 52e.8 Other HHS regulations and policies that apply.

Several other regulations apply to grants under this part. These include but are not necessarily limited to:

42 CFR part 50, subpart A—Responsibility of PHS awardee and applicant institutions for dealing with and reporting possible misconduct in science

42 CFR part 50, subpart D—Public Health Service grant appeals procedure

45 CFR part 16—Procedures of the Departmental Grant Appeals Board

45 CFR part 46—Protection of human subjects

45 CFR part 74—Administration of grants
45 CFR part 75—Informal grant appeals procedures
45 CFR part 76—Governmentwide debarment and suspension (nonprocurement) and governmentwide requirements for drug-free workplace (grants)
45 CFR part 80—Nondiscrimination under programs receiving Federal assistance through the Department of Health and Human Services—Effectuation of Title VI of the Civil Rights Act of 1964
45 CFR part 81—Practice and procedure for hearings under part 80 of this title
45 CFR part 84—Nondiscrimination on the basis of handicap in programs and activities receiving or benefiting from Federal financial assistance
45 CFR part 86—Nondiscrimination on the basis of sex in education programs and activities receiving or benefiting from Federal financial assistance
45 CFR part 91—Nondiscrimination on the basis of age in HHS programs or activities receiving Federal financial assistance
45 CFR part 92—Uniform administrative requirements for grants and cooperative agreements to State and local governments
45 CFR part 93—New restrictions on lobbying
51 FR 16958 or successor—NIH Guidelines for Research Involving Recombinant DNA Molecules
''Public Health Service Policy on Humane Care and Use of Laboratory Animals,'' Office for Protection from Research Risks, NIH (Revised September 1986), or successor
59 FR 14508 (as republished March 28, 1994), as may be amended, or its successor—NIH Guidelines on the Inclusion of Women and Minorities as Subjects in Clinical Research.

[58 FR 54298, Oct. 21, 1993, as amended at 59 FR 59372, Nov. 17, 1994]

§52e.9 Additional conditions.

The Director, may with respect to any grant award impose additional conditions prior to or at the time of any award when in the Director's judgment those conditions are necessary to assure or protect advancement of the approved project, the interests of the public health, or the conservation of grant funds.

[45 FR 12249, Feb. 25, 1980, as amended at 58 FR 54299, Oct. 21, 1993]

PART 52h—SCIENTIFIC PEER REVIEW OF RESEARCH GRANT APPLICATIONS AND RESEARCH AND DEVELOPMENT CONTRACT PROJECTS

Sec.
52h.1 Applicability.
52h.2 Definitions.
52h.3 Establishment and operation of peer review groups.
52h.4 Composition of peer review groups.
52h.5 Conflict of interest.
52h.6 Availability of information.
52h.7 What matters must be reviewed for grants?
52h.8 What are the review criteria for grants?
52h.9 What matters must be reviewed for unsolicited contract proposals?
52h.10 What matters must be reviewed for solicited contract proposals?
52h.11 What are the review criteria for contract projects and proposals?
52h.12 Other regulations that apply.

AUTHORITY: 42 U.S.C. 216; 42 U.S.C. 282 (b)(6); 42 U.S.C. 284 (c)(3); 42 U.S.C. 289a.

SOURCE: 69 FR 275, Jan. 5, 2004, unless otherwise noted.

§52h.1 Applicability.

(a) This part applies to:

(1) Applications of the National Institutes of Health for grants or cooperative agreements (a reference in this part to grants includes cooperative agreements) for biomedical and behavioral research; and

(2) Biomedical and behavioral research and development contract project concepts and proposals for contract projects administered by the National Institutes of Health.

(b) This part does not apply to applications for:

(1) Continuation funding for budget periods within an approved project period;

(2) Supplemental funding to meet increased administrative costs within a project period; or

(3) Construction grants.

§52h.2 Definitions.

As used in this part:

(a) *Act* means the Public Health Service Act, as amended (42 U.S.C. 201 *et seq.*).

(b) *Appearance of a conflict of interest* means that a reviewer or close relative

or professional associate of the reviewer has a financial or other interest in an application or proposal that is known to the reviewer or the government official managing the review and would cause a reasonable person to question the reviewer's impartiality if he or she were to participate in the review; the government official managing the review (the Scientific Review Administrator or equivalent) will evaluate the appearance of a conflict of interest and determine, in accordance with this subpart, whether or not the interest would likely bias the reviewer's evaluation of the application or proposal.

(c) *Awarding official* means the Secretary of Health and Human Services and any other officer or employee of the Department of Health and Human Services to whom the authority involved has been delegated; except that, where the Act specifically authorizes another official to make awards in connection with a particular program, the awarding official shall mean that official and any other officer or employee of the Department of Health and Human Services to whom the authority involved has been delegated.

(d) *Budget period* means the interval of time (usually 12 months) into which the project period is divided for budgetary and reporting purposes.

(e) *Close relative* means a parent, spouse, domestic partner, or son or daughter.

(f) *Contract proposal* means a written offer to enter into a contract that is submitted to the appropriate agency official by an individual or nonfederal organization which includes, at a minimum, a description of the nature, purpose, duration, and cost of the project, and the methods, personnel, and facilities to be utilized in carrying it out. A contract proposal may be unsolicited by the federal government or submitted in response to a request for proposals.

(g) *Development* means the systematic use of knowledge gained from research to create useful materials, devices, systems, or methods.

(h) *DHHS* means the Department of Health and Human Services.

(i) *Director* means the Director of the National Institutes of Health and any other official or employee of the National Institutes of Health to whom the authority involved has been delegated.

(j) *Grant* as used in this part, includes cooperative agreements.

(k) *Peer review group* means a group of primarily nongovernment experts qualified by training and experience in particular scientific or technical fields, or as authorities knowledgeable in the various disciplines and fields related to the scientific areas under review, to give expert advice on the scientific and technical merit of grant applications or contract proposals, or the concept of contract projects, in accordance with this part.

(l) *Principal investigator* has the same meaning as in 42 CFR part 52.

(m) *Professional associate* means any colleague, scientific mentor, or student with whom the peer reviewer is currently conducting research or other significant professional activities or with whom the member has conducted such activities within three years of the date of the review.

(n) *Project approach* means the methodology to be followed and the resources needed in carrying out the project.

(o) *Project concept* means the basic purpose, scope, and objectives of the project.

(p) *Project period* has the same meaning as in 42 CFR part 52.

(q) *Real conflict of interest* means a reviewer or a close relative or professional associate of the reviewer has a financial or other interest in an application or proposal that is known to the reviewer and is likely to bias the reviewer's evaluation of that application or proposal as determined by the government official managing the review (the Scientific Review Administrator, or equivalent), as acknowledged by the reviewer, or as prescribed by this part. A reviewer shall have a real conflict of interest if he/she or a close relative or professional associate of the reviewer:

(1) Has received or could receive a direct financial benefit of any amount deriving from an application or proposal under review;

(2) Apart from any direct financial benefit deriving from an application or proposal under review, has received or could receive a financial benefit from

the applicant institution, offeror or principal investigator that in the aggregate exceeds $10,000 per year; this amount includes honoraria, fees, stock or other financial benefit, and additionally includes the current value of the reviewer's already existing stock holdings. The Director, NIH, may amend the dollar threshold periodically, as appropriate, after public notice and comment; or

(3) Has any other interest in the application or proposal that is likely to bias the reviewer's evaluation of that application or proposal. Regardless of the level of financial involvement or other interest, if the reviewer feels unable to provide objective advice, he/she must recuse him/herself from the review of the application or proposal at issue. The peer review system relies on the professionalism of each reviewer to identify to the designated government official any real or apparent conflicts of interest that are likely to bias the reviewer's evaluation of an application or proposal.

(r) *Request for proposals* means a Government solicitation to prospective offerors, under procedures for negotiated contracts, to submit a proposal to fulfill specific agency requirements based on terms and conditions defined in the request for proposals. The request for proposals contains information sufficient to enable all offerors to prepare proposals, and is as complete as possible with respect to: nature of work to be performed; descriptions and specifications of items to be delivered; performance schedule; special requirements clauses, or other circumstances affecting the contract; format for cost proposals; and evaluation criteria by which the proposals will be evaluated.

(s) *Research* has the same meaning as in 42 CFR part 52.

(t) *Research and development contract project* means an identified, circumscribed activity, involving a single contract or two or more similar, related, or interdependent contracts, intended and designed to acquire new or fuller knowledge and understanding in the areas of biomedical or behavioral research and/or to use such knowledge and understanding to develop useful materials, devices, systems, or methods.

(u) *Scientific review group* has the same meaning as peer review group, which is defined in paragraph (k) of this section.

(v) *Solicited contract proposal* has the same meaning as the definition of offer in 48 CFR 2.101.

(w) *Unsolicited contract proposal* has the same meaning as unsolicited proposal in 48 CFR 15.601.

§52h.3 Establishment and operation of peer review groups.

(a) To the extent applicable, the Federal Advisory Committee Act, as amended (5 U.S.C. appendix 2) and chapter 9 of the DHHS General Administration Manual[1] shall govern the establishment and operation of peer review groups.

(b) Subject to §52h.5 and paragraph (a) of this section, the Director will adopt procedures for the conduct of reviews and the formulation of recommendations under §§52h.7, 52h.9, and 52h.10.

§52h.4 Composition of peer review groups.

(a) To the extent applicable, the selection and appointment of members of peer review groups and their terms of service shall be governed by chapter 9 of the DHHS General Administration Manual.

(b) Subject to paragraph (a) of this section, members will be selected based upon their training and experience in relevant scientific or technical fields, or upon their qualifications as authorities knowledgeable in the various disciplines and fields related to the scientific areas under review, taking into account, among other factors:

(1) The level of formal scientific or technical education completed or experience acquired by the individual;

(2) The extent to which the individual has engaged in relevant research, the capacities (e.g., principal investigator, assistant) in which the

[1] The DHHS General Administration Manual is available for public inspection and copying at the Department's information centers listed in 45 CFR 5.31 and may be purchased from the Superintendent of Documents, U.S. Government Printing Office, Washington, DC 20402.

individual has done so, and the quality of the research;

(3) Recognition as reflected by awards and other honors received from scientific and professional organizations; and

(4) The need for the group to have included within its membership experts from various areas of specialization within relevant scientific or technical fields, or authorities knowledgeable in the various disciplines and fields related to the scientific areas under review.

(c) Except as otherwise provided by law, not more than one-fourth of the members of any peer review group to which this part applies may be officers or employees of the United States. Being a member of a scientific peer review group does not make an individual an officer or employee of the United States.

§ 52h.5 Conflict of interest.

(a) This section applies only to conflicts of interest involving members of peer review groups. This section does not cover individuals serving on National Advisory Councils or Boards, Boards of Scientific Counselors, or Program Advisory Committees who, if not already officers or employees of the United States, are special Government employees and covered by title 18 of the United States Code, the Office of Government Ethics Standards of Ethical Conduct for Employees of the Executive Branch (5 CFR part 2635), and Executive Order 11222, as amended. For those federal employees serving on peer review groups, in accordance with § 52h.4, the requirements of title 18 of the United States Code, 5 CFR part 2635 and Executive Order 12674, as modified by Executive Order 12731, apply.

(b) A reviewer with a real conflict of interest must recuse him/herself from the review of the application or proposal, except as otherwise provided in this section.

(1) A reviewer who is a salaried employee, whether full-time or part-time, of the applicant institution, offeror, or principal investigator, or is negotiating for employment, shall be considered to have a real conflict of interest with regard to an application/proposal from that organization or principal investigator, except that the Director may determine there is no real conflict of interest or an appearance of a conflict of interest where the components of a large or multicomponent organization are sufficiently independent to constitute, in effect, separate organizations, provided that the reviewer has no responsibilities at the institution that would significantly affect the other component.

(2) Where a reviewer's real conflict of interest is based upon the financial or other interest of a close relative or professional associate of the reviewer, that reviewer must recuse him/herself, unless the Director provides a waiver in accordance with paragraph (b)(4) of this section.

(3) For contract proposal reviews, an individual with a real conflict of interest in a particular proposal(s) is generally not permitted to participate in the review of any proposals responding to the same request for proposals. However, if there is no other qualified reviewer available having that individual's expertise and that expertise is essential to ensure a competent and fair review, a waiver may be granted by the Director to permit that individual to serve as a reviewer of those proposals with which the reviewer has no conflict, while recusing him/herself from the review of any particular proposal(s) in which there is a conflict of interest.

(4) The Director may waive any of the requirements in paragraph (b) of this section relating to a real conflict of interest if the Director determines that there are no other practical means for securing appropriate expert advice on a particular grant or cooperative agreement application, contract project, or contract proposal, and that the real conflict of interest is not so substantial as to be likely to affect the integrity of the advice to be provided by the reviewer.

(c) Any appearance of a conflict of interest will result in recusal of the reviewer, unless the Director provides a waiver, determining that it would be difficult or impractical to carry out the review otherwise, and the integrity of the review process would not be impaired by the reviewer's participation.

(d) When a peer review group meets regularly it is assumed that a relationship among individual reviewers in the group exists and that the group as a whole may not be objective about evaluating the work of one of its members. In such a case, a member's application or proposal shall be reviewed by another qualified review group to ensure that a competent and objective review is obtained.

(e) When a member of a peer review group participates in or is present during the concept review of a contract proposal that occurs after release of the solicitation, as described under § 52h.10(b), but before receipt of proposals, the member is not considered to have a real conflict of interest as described in paragraph (b) of this section, but is subject to paragraph (c) of this section concerning appearance of conflict of interest if the member is planning to respond to the solicitation. When the concept review occurs after receipt of proposals, paragraph (b) applies.

(f) No member of a peer review group may participate in any review of a specific grant application or contract project for which the member has had or is expected to have any other responsibility or involvement (whether pre-award or post-award) as an officer or employee of the United States.

(g) The Director may periodically issue guidance to the government officials responsible for managing reviews and reviewers on what interests would constitute a real conflict of interest or an appearance of a conflict of interest.

§ 52h.6 Availability of information.

(a) Transcripts, minutes, and other documents made available to or prepared for or by a peer review group will be available for public inspection and copying to the extent provided by the Freedom of Information Act, as amended (5 U.S.C. 552), the Federal Advisory Committee Act, as amended (5 U.S.C. appendix 2), the Privacy Act of 1974, as amended (5 U.S.C. 552a), and implementing DHHS regulations (45 CFR parts 5, 5b).

(b) Meetings of peer review groups reviewing grant applications or contract proposals are closed to the public in accordance with sections 552b(c)(4) and 552b(c)(6) of the Government in the Sunshine Act, as amended (5 U.S.C. 552b(c)(4) and 552b(c)(6)) and section 10(d) of the Federal Advisory Committee Act, as amended (5 U.S.C. appendix 2). Documents made available to, or prepared for or by peer review groups that contain trade secrets or commercial or financial information obtained from a person that is privileged or confidential, and personal information concerning individuals associated with applications or proposals, the disclosure of which would constitute a clearly unwarranted invasion of personal privacy, are exempt from disclosure in accordance with the Freedom of Information Act, as amended (5 U.S.C. 552(b)(4) and 552(b)(6)).

(c) Meetings of peer review groups reviewing contract project concepts are open to the public in accordance with the provisions of the Federal Advisory Committee Act, as amended (5 U.S.C. appendix 2) and the Government in the Sunshine Act, as amended (5 U.S.C. 552b).

§ 52h.7 What matters must be reviewed for grants?

(a) Except as otherwise provided by law, no awarding official shall award a grant based upon an application covered by this part unless the application has been reviewed by a peer review group in accordance with the provisions of this part and the group has made recommendations concerning the scientific merit of that application. In addition, where under applicable law an awarding official is required to secure the approval or advice of a national council or board concerning an application, the application may not be considered by the council or board unless it has been reviewed by the appropriate peer review group, in accordance with the provisions of this part, and the group has made recommendations concerning the scientific merit of the application, except where the council or board is the peer review group.

(b) Except to the extent otherwise provided by law, recommendations by peer review groups are advisory only and not binding on the awarding official or the national advisory council or board.

§ 52h.8 What are the review criteria for grants?

In carrying out its review under § 52h.7, the scientific peer review group shall assess the overall impact that the project could have on the research field involved, taking into account, among other pertinent factors:

(a) The significance of the goals of the proposed research, from a scientific or technical standpoint;

(b) The adequacy of the approach and methodology proposed to carry out the research;

(c) The innovativeness and originality of the proposed research;

(d) The qualifications and experience of the principal investigator and proposed staff;

(e) The scientific environment and reasonable availability of resources necessary to the research;

(f) The adequacy of plans to include both genders, minorities, children and special populations as appropriate for the scientific goals of the research;

(g) The reasonableness of the proposed budget and duration in relation to the proposed research; and

(h) The adequacy of the proposed protection for humans, animals, and the environment, to the extent they may be adversely affected by the project proposed in the application.

§ 52h.9 What matters must be reviewed for unsolicited contract proposals?

(a) Except as otherwise provided by law, no awarding official shall award a contract based upon an unsolicited contract proposal covered by this part unless the proposal has been reviewed by a peer review group in accordance with the provisions of this part and the group has made recommendations concerning the scientific merit of that proposal.

(b) Except to the extent otherwise provided by law, peer review group recommendations are advisory only and not binding on the awarding official.

§ 52h.10 What matters must be reviewed for solicited contract proposals?

(a) Subject to paragraphs (b) and (c) of this section, no awarding official shall issue a request for contract proposals with respect to a contract project involving solicited contract proposals, unless the project concept has been reviewed by a peer review group or advisory council in accordance with this part and the group has made recommendations concerning the scientific merit of the concept.

(b) The awarding official may delay carrying out the requirements for peer review of paragraph (a) of this section until after issuing a request for proposals if the official determines that the accomplishment of essential program objectives would otherwise be placed in jeopardy and any further delay clearly would not be in the best interest of the Government. The awarding official shall specify in writing the grounds on which this determination is based. Under these circumstances, the awarding official will not award a contract until peer review of the project concept and the proposals has been completed. The request for proposals shall state that the project concept will be reviewed by a peer review group and that no award will be made until the review is conducted and recommendations made based on that review.

(c) The awarding official may determine that peer review of the project concept for behavioral or biomedical research and development contracts is not needed if one of the following circumstances applies: the solicitation is to re-compete or extend a project that is within the scope of a current project that has been peer reviewed, or there is a Congressional authorization or mandate to conduct specific contract projects. If a substantial amount of time has passed since the concept review, the awarding official shall determine whether peer review is required to ensure the continued scientific merit of the concept.

(d) Except to the extent otherwise provided by law, the recommendations referred to in this section are advisory only and not binding on the awarding official.

§ 52h.11 What are the review criteria for contract projects and proposals?

(a) In carrying out its review of a project concept under § 52h.10(a) or § 52h.10(b), the peer review group shall

take into account, among other pertinent factors:

(1) The significance from a scientific or technical standpoint of the goals of the proposed research or development activity;

(2) The availability of the technology and other resources necessary to achieve those goals;

(3) The extent to which there are identified, practical uses for the anticipated results of the activity; and

(4) Where the review includes the project approach, the adequacy of the methodology to be utilized in carrying out the activity.

(b) In carrying out its review of unsolicited contract proposals under § 52h.9, the peer review group shall take into account, among other pertinent factors, the criteria in § 52h.8 which are relevant to the particular proposals.

(c) In carrying out its review of solicited proposals under § 52h.10(a) or (b), the peer review group shall evaluate each proposal in accordance with the criteria set forth in the request for proposals.

§ 52h.12 Other regulations that apply.

The regulations in this part are in addition to, and do not supersede other regulations concerning grant applications, contract projects, or contract proposals set forth elsewhere in this title, title 45, or title 48 of the Code of Federal Regulations.

PART 53—GRANTS, LOANS AND LOAN GUARANTEES FOR CONSTRUCTION AND MODERNIZATION OF HOSPITALS AND MEDICAL FACILITIES

Subparts A–K [Reserved]

Subpart L—Services for Persons Unable To Pay; Community Service; Nondiscrimination

Sec.

53.111 Services for persons unable to pay.
53.112 Nondiscrimination.
53.113 Community service.

Subpart M [Reserved]

Subpart N—Loan Guarantees and Direct Loans

53.154 Waiver of right of recovery.
53.155 Modification of loans.
53.156 Fees for modification requests.

AUTHORITY: Secs. 215, 603, 609, 621, 623, Public Health Service Act as amended, 58 Stat. 690, 78 Stat. 451 and 456, 84 Stat. 344 and 346 (42 U.S.C. 216, 291c, 291i, 291j–1 and 291j–3; 31 U.S.C. 9701).

Subparts A–K [Reserved]

Subpart L—Services for Persons Unable To Pay; Community Service; Nondiscrimination.

§ 53.111 Services for persons unable to pay.

(a) *Applicability*. The provisions of this section apply to every applicant which heretofore has given or hereafter will give an assurance that it will make available a reasonable volume of services to persons unable to pay therefor but shall not apply to an applicant (1) for more than 20 years after the completion of construction of any facility with respect to which funds have been paid under section 606 of the Act or (2) beyond the period during which any amount of a direct loan made under sections 610 or 623 of the Act, or any amount of a loan with respect to which a loan guarantee and interest subsidy has been provided under sections 623 and 624 of the Act remains unpaid.

(b) *Definitions*. As used in this section:

(1) The term *facility* includes hospitals, facilities for long-term care, outpatient facilities, rehabilitation facilities, and public health centers;

(2) The term *applicant* means an applicant for, or recipient of, a grant, a loan guarantee or a loan under the Act;

(3) *Fiscal year* means the fiscal year of the applicant;

(4) The term *operating costs* means the actual operating costs of the applicant for a fiscal year as determined in accordance with cost determination principles and requirements under title XVIII of the Social Security Act (42 U.S.C. 1395): *Provided*, That such ''operating costs'' shall be determined for the applicant's entire facility and for

all patients regardless of the source of payment for such care: *And provided further,* That in determining such operating costs there shall be deducted the amount of all actual or estimated reimbursements, as applicable, for services received or to be received pursuant to title XVIII and XIX of the Social Security Act (42 U.S.C. 1395 and 1936);

(5) The term *reasonable cost* means the cost of providing services to a specific patient determined in accordance with the cost determination principles and requirements under title XVIII of the Social Security Act (42 U.S.C. 1395) and subpart D of the regulations thereunder (20 CFR part 405,[1] part 401 *et seq.*);

(6) The term *uncompensated services* means services which are made available to persons unable to pay therefor without charge or at a charge which is less than the reasonable cost of such services. The level of such services is measured by the difference between the amount charged such persons for such services and the reasonable cost thereof;

(7) *Reasonable volume of services to persons unable to pay therefor* means a level of uncompensated services which meets a need for such services in the area served by an applicant and which is within the financial ability of such applicant to provide.

(c) *Assurance.* (1) Before an application under this part is recommended by a State agency to the Secretary for approval, the State agency shall obtain an assurance from the applicant that there will be made available in the facility or portion thereof to be constructed or modernized a reasonable volume of services to persons unable to pay therefor. The requirement of an assurance from an applicant shall be waived if the applicant demonstrates to the satisfaction of the State agency, subject to subsequent approval by the Secretary, that such a requirement is not feasible from a financial viewpoint.

(2) Prior to recommending that such requirement be waived, the State agency shall publish in a newspaper of general circulation in the area served by the applicant a notice of the request for such waiver and invite public comment thereon, allowing not less than 30 days therefor. All comments received shall be available for public inspection, and shall be considered by the State agency in arriving at its recommendation. Notice of the determination on the request for waiver shall be given to all interested persons and to the public before the approval of the Secretary is sought.

(d) *Presumptive compliance guideline.* An applicant which, for a fiscal year, (1) budgets for the support of, and makes available on request, uncompensated services at a level not less than the lesser of 3 percent of operating costs or 10 percent of all Federal assistance provided to or on behalf of the applicant under the Act, or (2) certifies that it will not exclude any person from admission on the ground that such person is unable to pay for needed services and that it will make available to each person so admitted services provided by the facility without charge or at a charge below reasonable cost which does not exceed any such person's ability to pay therefor as determined in accordance with criteria established pursuant to paragraph (g), shall be deemed in presumptive compliance with its assurance. In the case of a loan guarantee with interest subsidy or a direct loan guarantee be sold by the Secretary with an interest subsidy, the amount of Federal assistance shall include the total amount of the interest subsidy which the Secretary is, or will be, obligated to pay over the full life of the loan, as well as any other payments which the Secretary makes on behalf of the applicant in connection with the loan guarantee or the direct loan which has been sold.

(e) *Compliance reports.* (1) Each applicant shall, not later than 120 days after the end of a fiscal year, unless a longer period is approved by the State agency for good cause shown, file with the State agency a copy of its annual statement for such year as required by section 646 of the Act and § 53.128(q), which shall set forth its operating costs.

(2) With respect to each fiscal year for which a level of uncompensated services has been established in accordance with this section, the annual

[1] Redesignated as 42 CFR part 405 at 42 FR 52826, Sept. 30, 1977.

statement shall also set forth the amount of uncompensated services provided in such year.

(i) The provision of a level of uncompensated services in such year which equals or exceeds the level established pursuant to paragraph (h) of this section for such year shall constitute compliance with the assurance.

(ii) If the level of services provided was less than the level of uncompensated services established pursuant to paragraph (h) of this section, the applicant shall submit with such statement: A justification therefor, showing that the provision of such lower level of uncompensated services was reasonable under the circumstances; and a description of the steps it proposes to take to assure the availability and utilization of the level of uncompensated services to be established for the current fiscal year, which shall include an affirmative action plan, utilizing press releases or other appropriate means as the facility may desire to bring to the attention of the public the availability of such uncompensated services and the conditions of eligibility therefor.

(3) Each applicant shall file with its annual statement a copy of that portion of its adopted budget for the current fiscal year relating to the support of uncompensated services in such year. Such budget for uncompensated services shall be based on the operating costs of the applicant for the preceding fiscal year and shall give due cognizance to probable increases in operating costs. Except in the case of a certification pursuant to paragraph (d)(2) of this section, if the budget statement does not conform to the presumptive compliance guideline, the applicant shall submit with its statement.

(i) A justification therefor, showing that such lower level of uncompensated services is reasonable under the circumstances, and

(ii) A plan to increase such uncompensated services to meet the presumptive compliance guideline or such other level of uncompensated services as may have been established or as it requests the State agency to establish in accordance with paragraph (h) of this section.

(4) The applicant shall also submit such additional reports related to compliance with its assurance as the State agency may reasonably require.

(5) Pending the establishment of a level of uncompensated services for any fiscal year pursuant to paragraph (h) of this section, the applicant shall, in such fiscal year, provide a level of services which is the higher of

(i) The level established for the preceding fiscal year (or if no such level has been established for such prior year, the level of services provided in such year) or

(ii) The level proposed in its adopted budget for the current fiscal year.

(f) *Qualifying services.* (1) In determining the amount of uncompensated services provided by an applicant, there shall be included only those services provided to an individual with respect to whom the applicant has made a written determination prior to the provision of such services that such individual is unable to pay therefor under the criteria established pursuant to 42 CFR 53.111(g), except that:

(i) Such determination may be made after the provision of such services in the case of services provided on an emergency basis: *Provided,* That when billing is made for such service, such billing must be accompanied by substantially the information required in the posted notice under paragraph (i) of this section; and

(ii) Such determination may be made after the provision of such services in the case of a change in circumstances as a result of the illness or injury occasioning such services (e.g., the patient's financial condition has changed due to a loss of wages resulting from the illness) or in case of insurance coverage or other resources being less than anticipated or the costs of services being greater than anticipated. *Further,* in all cases where such determination was not made prior to the provision of services, such services may not be included as uncompensated services if any collection effort has been made other than the rendering of bills permissible in the above exceptions: *Provided,* That such a determination may be made at any time if the determination was hindered or delayed by reason of erroneous or incomplete information furnished by or in behalf of the patient.

(2) There shall be excluded from the computation of uncompensated services:

(i) Any amount which the applicant has received, or is entitled to receive, from a third party insurer or under a governmental program; and

(ii) The reasonable cost of any services for which payment in whole or in part would be available under a governmental program (e.g., Medicare and Medicaid) in which the applicant, although eligible to do so, does not participate, but only to the extent of such otherwise available payment.

(g) *Persons unable to pay for services.* (1) The State agency shall set forth in its State plan, subject to approval by the Secretary, criteria for identifying persons unable to pay for services, which shall include persons who are otherwise self-supporting but unable to pay the full charge for needed services. Such criteria shall be based on the following or similar factors:

(i) The health and medical care insurance coverage, personal or family income, the size of the patient's family, and other financial obligations and resources of the patient or the family in relation to the reasonable cost of the services;

(ii) Generally recognized standards of need such as:

(*a*) The State standard for the medically needy as determined for the purposes of the Aid for Families with Dependent Children program;

(*b*) The current Social Security Administration poverty income level;

(*c*) The current Office of Economic Opportunity Income Poverty Guidelines applicable in the area; or

(iii) Any other equivalent measures which are found by the Secretary to provide a reasonable basis for determining an individual's ability to pay for medical and hospital services.

(2) A copy of such criteria shall be provided by the applicant, upon request, to any patient or former patient of the applicant and to any person seeking services from the applicant.

(3) The State agency shall provide a copy of such criteria to any person requesting it.

(h) *Level of uncompensated services.* (1) The State agency shall set forth in its State plan procedures for the determination for each applicant of the level of uncompensated services which constitutes a reasonable volume of services to persons unable to pay therefor provided that in no event shall the level of uncompensated services established under this section exceed the presumptive compliance guideline.

(2) The State agency shall for the purpose of making such determination, review, and evaluate the annual statement, the budget and the related documents submitted by each applicant pursuant to paragraph (e) of this section, by applying the following criteria:

(i) The financial status of the applicant, taking account of income from all sources, and its financial ability to provide uncompensated services;

(ii) The nature and quantity of services provided by the applicant;

(iii) The need within the area served by the applicant for the provision, without charge or at charge which is less than reasonable cost, for services of the nature provided or to be provided by the applicant; and

(iv) The extent and nature of joint or cooperative programs with other facilities for the provision of uncompensated services, and the extent and nature of outreach services directed to the needs of underserved areas.

(3) In accordance with its findings made after such review and evaluation, the State agency shall, within 60 days after receipt of the annual statement and related documents required by paragraph (e) of this section, for each fiscal year of an applicant which begins following the expiration of 90 days after the effective date of this regulation:

(i) Establish a level of uncompensated services for each applicant which may be equal to or less than the presumptive compliance guideline: *Provided,* That if the State agency determines, in accordance with paragraph (h)(2) of this section, that (*a*) there is a need in the area served by an applicant for a level of uncompensated services greater than the level proposed in the applicant's budget statement, and (*b*) the applicant is financially able to provide such greater level of uncompensated services, the State agency shall

establish such greater level as the level applicable to the applicant; and

(ii) Accept or modify a plan submitted pursuant to paragraph (e) of this section.

(4) The State agency shall notify the applicant in writing of the level of uncompensated services which it has established for the applicant for the fiscal year. At the time of notifying the applicant, the State agency shall also publish as a public notice in a newspaper of general circulation within the community served by the applicant the rate that has been established and a statement that the documents upon which the agency based its determination are available for public inspection at a location and time prescribed. In the case of the establishment by the State agency of a rate which is less than the presumptive compliance guideline, such notice shall also include a statement that persons wishing to object to the rate established may do so by writing to the State agency within 20 days after publication of the notice: *Provided*, That the applicant may object to any level established which is greater than the level proposed in the applicant's budget statement.

(5) In accordance with the provisions of paragraph (h)(4) of this section, the applicant or any person or persons residing or located within the area served by the applicant, or any organization on behalf of such person or persons, may submit to the State agency within 20 days of the publication and sending of the notice objections to the rate established by the State agency for the applicant. Such objections may be supported in writing by factual information and argument. The State agency shall give public notice of receipt of the objections and shall make the objections and their supporting documents available for public inspection and comment. It may, if it believes that determination of the objections will be assisted by oral evidence or by oral argument, set a public hearing on the objections and shall give notice of such hearing to all interested parties and to the public. The State agency shall within 60 days of the expiration of the period within which objections may be filed, rule upon the objections in writing, stating its reason for sustaining or overruling them, in whole or in part, and establishing finally the rate of uncompensated services either the same as, above, or below the rate previously established, as may best accord with all of the evidence on file with or heard by the State agency. Notice of the final determination shall be mailed to all parties who filed objections or who participated in the proceedings leading to the redetermination.

(6) Within 20 days of receipt of written notice of the final determination of a State agency after ruling on objections to the rate established by the State agency, the applicant or any other interested person or organization may submit to the Secretary a written request for review of the State agency determination. Such review shall be made upon the record of the State agency determination which shall be sustained if supported by substantial evidence and is not otherwise arbitrary or capricious. If the Secretary or his designee determines that the rate established by the State agency is unsupported by the evidence in the record or is otherwise arbitrary or capricious, the Secretary or his designee shall, upon the basis of the record or upon other evidence or information which is before him or which he may obtain, establish a level of uncompensated services which he determines, in accordance with the criteria set out in paragraph (h)(2) of this section, is appropriate.

(7) The level of uncompensated services established for an applicant under this section for any fiscal year shall constitute a reasonable volume of services to persons unable to pay therefor with respect to such applicant for such fiscal year.

(i) *Posted notice*. The applicant shall post notice (which shall be multilingual where the applicant serves a multilingual community), in substantially the following form, in appropriate areas within the facility (admissions, office, emergency department and business office) for the purpose of informing patients or potential patients that criteria for eligibility and applications are available upon request:

NOTICE OF HILL-BURTON OBLIGATION

This hospital (or other facility) is required by law to give a reasonable amount of service at no cost or less than full cost to people who cannot pay. If you think that you are eligible for these services, please contact our business office (give office location) and ask for assistance. If you are not satisfied with the results, you may contact (the State Hill-Burton agency with address).

Provided, That an applicant which has selected a presumptive compliance guideline under paragraph (d)(1) of this section may, at its option, either (1) add to such notice language stating that the facility's obligation is limited to a specified dollar volume of uncompensated services and that if the facility has, during a specified period (e.g., year, quarter, month), already provided a volume of uncompensated services sufficient to satisfy such obligation, any person inquiring about such services will be given a written statement to that effect which shall also state when additional uncompensated services will be available; or (2) post an additional notice stating that the facility's obligation has been satisfied for the current period and stating when additional uncompensated services will be available.

(j) *Evaluation and enforcement.* The State plan shall provide for evaluation and enforcement of the assurance in accordance with the following requirements:

(1) The State agency shall,

(i) At least annually, perform evaluations of the amount of the various services provided in each facility with respect to which Federal assistance has been provided under the Act, to determine whether such assurance is being complied with; and

(ii) Establish procedures for the investigation of complaints that such assurance is not being complied with.

(2) Evaluation pursuant to paragraph (j)(1) of this section shall be based on the annual budget of each facility for uncompensated services and on financial statements of such facilities filed pursuant to section 646 of the Act and § 53.128(q), and on such other information, including reports of investigations and hearing decisions, as the State agency deems relevant and material.

(3) The State plan shall provide for adequate methods of enforcement of the assurance, including effective sanctions to be applied against any facility which fails to comply with such assurance. Such sanctions may include, but need not be limited to, license revocation, termination of State assistance, and court action.

(k) *Reports.* (1) The State agency shall, not less often than annually, report in writing to the Secretary its evaluation of each facility's compliance with the assurance, the disposition of each complaint received by the State agency, proposed remedial action with respect to each facility found by the State agency to be not in compliance with the assurance, and the status of such remedial action.

(2) In addition, the State agency shall promptly report to the Regional Attorney and Regional Health Director of the Department of Health and Human Services the institution of any legal action against a facility or the State agency involving compliance with the assurance.

[37 FR 14721, July 22, 1972, as amended at 38 FR 16354, June 22, 1973; 40 FR 46203, Oct. 6, 1975]

§ 53.112 Nondiscrimination.

(a) Before an application is recommended by a State agency to the Secretary for approval, the State agency shall obtain an assurance from the applicant that all portions and services of the entire facility for the construction or modernization of which, or in connection with which, aid under the Act is sought will be made available without discrimination on account of creed and no professionally qualified person will be discriminated against on account of creed with respect to the privilege of professional practice in the facility.

(b) Each construction contract is subject to the condition that the applicant shall comply with the requirements of Executive Order 11246, September 24, 1965 (30 FR 12319), relating to nondiscrimination in construction contract employment, and the applicable rules, regulations, and procedures prescribed pursuant thereto.

(c) Attention is called to the requirement of title VI of the Civil Rights Act of 1964 (42 U.S.C. 2000d; 78 Stat. 252) which provides that no person in the United States shall, on the ground of race, color, or national origin be excluded from participation in, be denied

the benefits of, or be subjected to discrimination under any program or activity receiving Federal financial assistance. A regulation implementing such title VI, applicable to assistance under this part for construction and modernization of hospitals and medical facilities, has been issued by the Secretary of Health and Human Services with the approval of the President (45 CFR part 80).

[37 FR 182, Jan. 6, 1972, as amended at 39 FR 31767, Aug. 30, 1974]

§ 53.113 Community service.

(a) *Applicability*. The provisions of this section apply to every applicant which heretofore has given or hereafter will give a community service assurance.

(b) *Definitions*. As used in this section:

(1) The term *community service assurance* means an assurance required by regulations promulgated pursuant to section 603(e)(1) of the Act or the predecessor of that section (section 622(f), Public Health Service Act, enacted by Pub. L. 79–725, 60 Stat. 1041).

(2) The term *facility* has the same meaning as is given it in § 53.111(b)(1).

(3) The term *applicant* has the same meaning as is given it in § 53.111(b)(2).

(4) The term *fiscal year* has the same meaning as is given it in § 53.111(b)(3).

(c) *Assurance*. Before an application under this part is recommended by a State agency to the Secretary for approval, the State agency shall obtain an assurance from the applicant that the facility will furnish a community service.

(d) *Compliance*. In order to comply with its community service assurance an applicant must:

(1)(i) Make the services it furnishes available to the general public, or

(ii) Limit the availability of such services only on the basis of age, medical indigency, or type or kind of medical or mental disability, or

(iii) If the facility constitutes a medical or nursing care unit of a home or other institution, make such home or other institution available in accordance with paragraph (d)(1) (i) or (ii) of this section; *and*

(2)(i) Make arrangements, if eligible to do so, for reimbursement for services with:

(A) Those principal State and local governmental third-party payors which provide reimbursement for services that is not less than the actual cost of such services as determined in accordance with accepted cost accounting principles; and

(B) Those Federal governmental third-party programs, such as Medicare and Medicaid, to the extent that the applicant is entitled to reimbursement at reasonable cost under a formula established in accordance with applicable Federal law.

(ii) Take such additional steps as may be necessary to ensure that admission to and services of the facility will be available to beneficiaries of the governmental programs specified in paragraph (d)(2)(i) of this section without discrimination (or preference) on account of their being such beneficiaries.

(e) *Reports*. The annual statement required by section 646 of the Act and § 53.128(q), a copy of which must be submitted to the State agency in accordance with the requirements of § 53.111(e)(1), shall set forth the amount of the reimbursement received pursuant to each arrangement with a principal governmental third-party payor.

(f) *Evaluation and enforcement*. The State plan shall provide for evaluation and enforcement of the community service assurance in accordance with the following requirements:

(1) The State agency shall,

(i) At least annually, evaluate the compliance of facilities with such assurance; and

(ii) Establish procedures for the investigation of complaints that such assurance is not being complied with.

(2) The State plan shall provide for adequate methods of enforcement of the assurance, including effective sanctions to be applied against any facility which fails to comply with such assurance. Such sanctions may include, but need not be limited to, license revocation, termination of State assistance and court action.

(g) *Reports*. (1) The State agency shall, not less often than annually, report in writing to the Secretary its

general evaluation of facilities' compliance with the assurance, the disposition of each complaint received by the State agency, proposed remedial action with respect to each facility found by the State agency to be not in compliance with the assurance, and the status of such remedial action.

(2) In addition, the State agency shall promptly report to the Regional Attorney and Regional Health Director of the Department of Health and Human Services the institution of any legal action against a facility or the State agency involving compliance with the assurance.

[39 FR 31767, Aug. 30, 1974, as amended at 42 FR 16780, Mar. 30, 1977]

Subpart M [Reserved]

Subpart N—Loan Guarantees and Direct Loans

§ 53.154 Waiver of right of recovery.

In determining whether there is good cause for waiver of any right of recovery which he may have against a nonprofit private agency by reason of any payments made pursuant to a loan guarantee, or against a public agency by reason of the failure of such agency to make payments of principal and interest on a direct loan to such agency, the Secretary shall take into consideration the extent to which:

(a) The facility with respect to which the loan guarantee or direct loan was made will continue to be devoted by the applicant or other owner to use for the purpose for which it was constructed or another public or nonprofit purpose which will promote the purposes of the Act;

(b) There are reasonable assurances that for the remainder of the repayment period of the loan other public or non-profit facilities not previously utilized for the purpose for which the facility was constructed will be so utilized and are substantially equivalent in nature and extent for such purposes; and

(c) Such recovery would seriously curtail the provision of medical services to persons in need of such services in the area.

[37 FR 182, Jan. 6, 1972]

§ 53.155 Modification of loans.

No official of the Department of Health and Human Services will approve any proposal to modify the terms of a loan guaranteed under title VI of the Public Health Service Act (42 U.S.C. 291 *et seq.*) and this subpart which would permit the use of the guaranteed loan (or the guarantee) as collateral for an issue of tax-exempt securities.

[48 FR 42984, Sept. 21, 1983]

§ 53.156 Fees for modification requests.

(a) Fees will be charged for the processing of requests for parity, and for major and minor modifications of the terms of documents evidencing and securing direct and guaranteed loans. In accordance with the requirements of the User Charge Statute, 31 U.S.C. 9701(b), the Secretary determines the amount of the application fee that must be submitted with each type of modification.

(1) As used in this section, a *request for parity* allows new debt to share lien position (*i.e.*, collateral) with an existing Hill-Burton loan.

(2) As used in this section, a *major modification* is any modification involving the release of $100,000 or more of collateral; a corporate restructuring that involves a transfer of assets; master indenture requests; modifications to a sinking fund; defeasance requests and requests for additional secured indebtedness; and any, other modification that involves a comparably significant use of Department resources.

(3) As used in this section, a *minor modification* is any modification involving the release of less than $100,000 of collateral; an easement; and any other modification that involves a comparable use of Department resources.

(b) A request for modification is to be accompanied by a certified check or money order in the amount of the appropriate fee, payable to the U.S. Treasury. The fees for modification requests submitted on or after October 28, 1986 are as follows:

(1) $1,500 for a minor modification,

(2) $4,500 for a major modification, and

(3) $5,500 for a request for parity.

(c) A submitter may withdraw its request for modification within 10 business days following its receipt and receive a refund of the fee.

(d) If the Secretary determines that a change in the amount of a fee is appropriate, the Department will issue a notice of proposed rulemaking in the FEDERAL REGISTER to announce the proposed amount.

[51 FR 39376, Oct. 28, 1986]

PART 54—CHARITABLE CHOICE REGULATIONS APPLICABLE TO STATES RECEIVING SUBSTANCE ABUSE PREVENTION AND TREATMENT BLOCK GRANTS AND/OR PROJECTS FOR ASSISTANCE IN TRANSITION FROM HOMELESSNESS GRANTS

Sec.
54.1 Scope.
54.2 Definitions.
54.3 Nondiscrimination against religious organizations.
54.4 Religious activities.
54.5 Religious character and independence.
54.6 Employment practices.
54.7 Nondiscrimination requirement.
54.8 Right to services from an alternative provider.
54.9 Assurances and State oversight of the Charitable Choice requirements.
54.10 Fiscal accountability.
54.11 Effects on State and local funds.
54.12 Treatment of intermediate organizations.
54.13 Educational requirements for personnel in drug treatment programs.

AUTHORITY: 42 U.S.C. 300x–65, *et seq.*, 42 U.S.C. 290kk, *et seq.*, 42 U.S.C. 300x–21, *et seq.*, 42 U.S.C. 290cc–21, *et seq.*, and 42 U.S.C. 2000bb, *et seq.*

SOURCE: 68 FR 56444, Sept. 30, 2003, unless otherwise noted.

§ 54.1 Scope.

These provisions apply only to funds provided directly to pay for substance abuse prevention and treatment services under 42 U.S.C. 300x–21 *et seq.*, and 42 U.S.C. 290cc–21 to 290cc–35. This part does not apply to direct funding under any such authorities for activities that do not involve the provision of substance abuse services, such as for infrastructure activities authorized under Section 1971 of the PHS Act, 42 U.S.C. 300y, and for technical assistance activities. This part implements the SAMHSA Charitable Choice provisions, 42 U.S.C. 300x–65 and 42 U.S.C. 290kk, *et seq.*

§ 54.2 Definitions.

(a) *Applicable program* means the programs authorized under:

(1) The Substance Abuse Prevention and Treatment (SAPT) Block Grant, 42 U.S.C. 300x to 300x–66, and

(2) The Projects for Assistance in Transition from Homelessness (PATH) Formula Grants, 42 U.S.C. 290cc–21 to 290cc–35 insofar as they fund substance abuse prevention and/or treatment services.

(b) *Religious organization* means a nonprofit religious organization.

(c) *Program beneficiary* means an individual who receives substance abuse services under a program funded in whole or in part by applicable programs.

(d) *Program participant* means a public or private entity that has received financial assistance, under an applicable program.

(e) *SAMHSA* means the U.S. Substance Abuse and Mental Health Services Administration.

(f) *SAMHSA Charitable Choice provisions* means the provisions of 42 U.S.C. 300x–65 and 42 U.S.C. 290kk, *et seq.*

(g) *Direct funding or Funds provided directly* means funding that is provided to an organization directly by a governmental entity or intermediate organization that has the same duties under this part as a governmental entity, as opposed to funding that an organization receives as the result of the genuine and independent private choice of a beneficiary through a voucher, certificate, coupon, or other similar mechanism.

§ 54.3 Nondiscrimination against religious organizations.

(a) Religious organizations are eligible, on the same basis as any other organization, to participate in applicable programs, as long as their services are provided consistent with the Establishment Clause and the Free Exercise Clause of the First Amendment to the United States Constitution. Except as provided herein or in the SAMHSA Charitable Choice provisions, nothing

in these regulations shall restrict the ability of the Federal government, or a State or local government, from applying to religious organizations the same eligibility conditions in applicable programs as are applied to any other nonprofit private organization.

(b) Neither the Federal government nor a State or local government receiving funds under these programs shall discriminate against an organization that is, or applies to be, a program participant on the basis of religion or the organization's religious character or affiliation.

§ 54.4 Religious activities.

No funds provided directly from SAMHSA or the relevant State or local government to organizations participating in applicable programs may be expended for inherently religious activities, such as worship, religious instruction, or proselytization. If an organization conducts such activities, it must offer them separately, in time or location, from the programs or services for which it receives funds directly from SAMHSA or the relevant State or local government under any applicable program, and participation must be voluntary for the program beneficiaries.

§ 54.5 Religious character and independence.

A religious organization that participates in an applicable program will retain its independence from Federal, State, and local governments and may continue to carry out its mission, including the definition, practice and expression of its religious beliefs. The organization may not expend funds that it receives directly from SAMHSA or the relevant State or local government to support any inherently religious activities, such as worship, religious instruction, or proselytization. Among other things, faith-based organizations may use space in their facilities to provide services supported by applicable programs, without removing religious art, icons, scriptures, or other symbols. In addition, a SAMHSA-funded religious organization retains the authority over its internal governance, and it may retain religious terms in its organization's name, select its board members on a religious basis, and include religious references in its organization's mission statements and other governing documents.

§ 54.6 Employment practices.

(a) The participation of a religious organization in, or its receipt of funds from, an applicable program does not affect that organization's exemption provided under 42 U.S.C. 2000e–1 regarding employment practices.

(b) To the extent that 42 U.S.C. 300x–57(a)(2) or 42 U.S.C. 290cc–33(a)(2) precludes a program participant from employing individuals of a particular religion to perform work connected with the carrying on of its activities, those provisions do not apply if such program participant is a religious corporation, association, educational institution, or society and can demonstrate that its religious exercise would be substantially burdened by application of these religious nondiscrimination requirements to its employment practices in the program or activity at issue. In order to make this demonstration, the program participant must certify: that it sincerely believes that employing individuals of a particular religion is important to the definition and maintenance of its religious identity, autonomy, and/or communal religious exercise; that it makes employment decisions on a religious basis in analogous programs; that the grant would materially affect its ability to provide the type of services in question; and that providing the services in question is expressive of its values or mission. The organization must maintain documentation to support these determinations and must make such documentation available to SAMHSA upon request.

(c) Nothing in this section shall be construed to modify or affect any State law or regulation that relates to discrimination in employment.

(d) The phrases ''with respect to the employment,'' ''individuals of a particular religion,'' and ''religious corporation, association, educational institution, or society'' shall have the same meaning as those terms have under section 702 of the Civil Rights Act of 1964, 42 U.S.C. 2000e–1(a).

§ 54.7 Nondiscrimination requirement.

A religious organization that is a program participant shall not, in providing program services or engaging in outreach activities under applicable programs, discriminate against a program beneficiary or prospective program beneficiary on the basis of religion, a religious belief, a refusal to hold a religious belief, or a refusal to actively participate in a religious practice.

§ 54.8 Right to services from an alternative provider.

(a) *General requirements.* If an otherwise eligible program beneficiary or prospective program beneficiary objects to the religious character of a program participant, within a reasonable period of time after the date of such objection, such program beneficiary shall have rights to notice, referral, and alternative services, as outlined in paragraphs (b) through (d) of this section.

(b) *Notice.* Program participants that refer an individual to alternative service providers, and the State government that administers the applicable programs, shall ensure that notice of the individual's right to services from an alternative provider is provided to all program beneficiaries or prospective beneficiaries. The notice must clearly articulate the program beneficiary's right to a referral and to services that reasonably meet the requirements of timeliness, capacity, accessibility, and equivalency as discussed in this section. A model notice is set out in appendix A to part 54a.

(c) *Referral to an alternative provider.* If a program beneficiary or prospective program beneficiary objects to the religious character of a program participant that is a religious organization, that participating religious organization shall, within a reasonable time after the date of such objection, refer such individual to an alternative provider. The State shall have a system in place to ensure that referrals are made to an alternative provider. That system shall ensure that the following occurs:

(1) The religious organization that is a program participant shall, within a reasonable time after the date of such objection, refer the beneficiary to an alternative provider;

(2) In making such referral, the program participant shall consider any list that the State or local government makes available to entities in the geographic area that provide program services, which may include utilizing any treatment locator system developed by SAMHSA;

(3) All referrals shall be made in a manner consistent with all applicable confidentiality laws, including, but not limited to, 42 CFR Part 2 (''Confidentiality of Alcohol and Drug Abuse Patient Records'');

(4) Upon referring a program beneficiary to an alternative provider, the program participant shall notify the State or responsible unit of government of such referral; and

(5) The program participant shall ensure that the program beneficiary makes contact with the alternative provider to which he or she is referred.

(d) *Provision and funding of alternative services.* If an otherwise eligible applicant or recipient objects to the religious character of a SAMHSA-funded service provider, the recipient is entitled to receive services from an alternative provider. In such cases, the State or local agency must provide the individual with alternative services within a reasonable period of time, as defined by the State agency. That alternative provider must be reasonably accessible and have the capacity to provide comparable services to the individual. Such services shall have a value that is not less than the value of the services that the individual would have received from the program participant to which the individual had such objection, as defined by the State agency. The alternative provider need not be a secular organization. It must simply be a provider to which the recipient has no religious objection. States may define and apply the terms ''reasonably accessible,'' ''a reasonable period of time,'' ''comparable,'' ''capacity,'' and ''value that is not less than.'' The appropriate State or local governments that administer SAMHSA-funded programs shall ensure that notice of their right to alternative services is provided to applicants or recipients. The notice must clearly articulate the recipient's

right to a referral and to services that reasonably meet the timeliness, capacity, accessibility, and equivalency requirements discussed above.

(e) *PATH annual report.* As part of the annual report to SAMHSA, PATH grantees shall include a description of the activities the grantee has taken to comply with 42 CFR part 54.

§ 54.9 Assurances and State oversight of the Charitable Choice requirements.

In order to ensure that States receiving grant funding under the SAPT block grant and PATH formula grant programs comply with the SAMHSA Charitable Choice provisions and provide oversight of religious organizations that provide substance abuse services under such programs, States are required as part of their applications for funding to certify that they will comply with all of the requirements of such provisions and the implementing regulations under this part, and that they will provide such oversight of religious organizations.

§ 54.10 Fiscal accountability.

(a) Religious organizations that receive applicable program funds for substance abuse services are subject to the same regulations as other nongovernmental organizations to account, in accordance with generally accepted auditing and accounting principles, for the use of such funds.

(b) Religious organizations shall segregate Federal funds they receive under an applicable program into a separate account from non-Federal funds. Only the Federal funds shall be subject to audit by government under the SAMHSA program.

§ 54.11 Effects on State and local funds.

If a State or local government contributes its own funds to supplement activities carried out under the applicable programs, the State or local government has the option to separate out the Federal funds or commingle them. If the funds are commingled, the provisions of this part shall apply to all of the commingled funds in the same manner, and to the same extent, as the provisions apply to the Federal funds.

§ 54.12 Treatment of intermediate organizations.

If a nongovernmental organization (referred to here as an ''intermediate organization''), acting under a contract or other agreement with the Federal Government or a State or local government, is given the authority under the contract or agreement to select nongovernmental organizations to provide services under any applicable program, the intermediate organization shall have the same duties under this part as the government. The intermediate organization retains all other rights of a nongovernmental organization under this part and the SAMHSA Charitable Choice provisions.

§ 54.13 Educational requirements for personnel in drug treatment programs.

In determining whether personnel of a program participant that has a record of successful drug treatment for the preceding three years have satisfied State or local requirements for education and training, a State or local government shall not discriminate against education and training provided to such personnel by a religious organization, so long as such education and training is comparable to that provided by nonreligious organizations, or is comparable to education and training that the State or local government would otherwise credit for purposes of determining whether the relevant requirements have been satisfied.

PART 54a—CHARITABLE CHOICE REGULATIONS APPLICABLE TO STATES, LOCAL GOVERNMENTS AND RELIGIOUS ORGANIZATIONS RECEIVING DISCRETIONARY FUNDING UNDER TITLE V OF THE PUBLIC HEALTH SERVICE ACT, 42 U.S.C. 290aa, ET SEQ., FOR SUBSTANCE ABUSE PREVENTION AND TREATMENT SERVICES

Sec.

54a.1 Scope.
54a.2 Definitions.
54a.3 Nondiscrimination against religious organizations.
54a.4 Religious activities.

54a.5 Religious character and independence.
54a.6 Employment practices.
54a.7 Nondiscrimination requirement.
54a.8 Right to services from an alternative provider.
54a.9 Oversight of the Charitable Choice requirements.
54a.10 Fiscal accountability.
54a.11 Effect on State and local funds.
54a.12 Treatment of intermediate organizations.
54a.13 Educational requirements for personnel in drug treatment programs.
54a.14 Determination of nonprofit status.
APPENDIX TO PART 54A—MODEL NOTICE TO INDIVIDUALS RECEIVING SUBSTANCE ABUSE SERVICES.

AUTHORITY: 42 U.S.C. 300x–65, and 42 U.S.C. 290kk, *et seq.*, 42 U.S.C. 290aa, *et seq.*

SOURCE: 68 FR 56446, Sept. 30, 2003, unless otherwise noted.

§54a.1 Scope.

These provisions apply only to funds provided directly to pay for substance abuse prevention and treatment services under Title V of the Public Health Service Act, 42 U.S.C. 290aa, *et seq.*, which are administered by the Substance Abuse and Mental Health Services Administration. This part does not apply to direct funding under any such authorities for only mental health services or for certain infrastructure and technical assistance activities, such as cooperative agreements for technical assistance centers, that do not provide substance abuse services to clients. This part implements the provisions of 42 U.S.C. 300x–65 and 42 U.S.C. 290kk, *et seq.*

§54a.2 Definitions.

(a) *Applicable program* means the programs authorized under Title V of the PHS Act, 42 U.S.C. 290aa, *et seq.*, for the provision of substance abuse prevention and or treatment services.

(b) *Religious organization* means a nonprofit religious organization.

(c) *Program beneficiary* means an individual who receives substance abuse services under a program funded in whole or in part by applicable programs.

(d) *Program participant* means a public or private entity that has received financial assistance under an applicable program.

(e) *SAMHSA* means the Substance Abuse and Mental Health Services Administration.

(f) *SAMHSA Charitable Choice* provisions means the provisions of 42 U.S.C. 300x–65 and 42 U.S.C. 290kk, *et seq.*

(g) *Direct funding* or *Funds provided directly* means funding that is provided to an organization directly by a governmental entity or intermediate organization that has the same duties under this part as a governmental entity, as opposed to funding that an organization receives as the result of the genuine and independent private choice of a beneficiary through a voucher, certificate, coupon, or other similar mechanism.

§54a.3 Nondiscrimination against religious organizations.

(a) Religious organizations are eligible, on the same basis as any other organization, to participate in applicable programs as long as their services are provided consistent with the Establishment Clause and the Free Exercise Clause of the First Amendment to the United States Constitution. Except as provided herein or in the SAMHSA Charitable Choice provisions, nothing in these regulations shall restrict the ability of the Federal government, or a State or local government, from applying to religious organizations the same eligibility conditions in applicable programs as are applied to any other nonprofit private organization.

(b) Neither the Federal government nor a State or local government receiving funds under these programs shall discriminate against an organization that is, or applies to be, a program participant on the basis of the organization's religious character or affiliation.

§54a.4 Religious activities.

No funds provided directly from SAMHSA or the relevant State or local government to organizations participating in applicable programs may be expended for inherently religious activities, such as worship, religious instruction, or proselytization. If an organization conducts such activities, it must offer them separately, in time or location, from the programs or services for which it receives funds directly from SAMHSA or the relevant State or

local government under any applicable program, and participation must be voluntary for the program beneficiaries.

§ 54a.5 Religious character and independence.

A religious organization that participates in an applicable program will retain its independence from Federal, State, and local governments and may continue to carry out its mission, including the definition, practice and expression of its religious beliefs. The organization may not expend funds that it receives directly from SAMHSA or the relevant State or local government to support any inherently religious activities, such as worship, religious instruction, or proselytization. Among other things, faith-based organizations may use space in their facilities to provide services supported by applicable programs, without removing religious art, icons, scriptures, or other symbols. In addition, a SAMHSA-funded religious organization retains the authority over its internal governance, and it may retain religious terms in its organization's name, select its board members on a religious basis, and include religious references in its organization's mission statements and other governing documents.

§ 54a.6 Employment practices.

(a) The participation of a religious organization in or its receipt of funds from an applicable program does not affect that organization's exemption provided under 42 U.S.C. 2000e–1 regarding employment practices.

(b) Nothing in this section shall be construed to modify or affect any State law or regulation that relates to discrimination in employment.

§ 54a.7 Nondiscrimination requirement.

A religious organization that is a program participant shall not, in providing program services or engaging in outreach activities under applicable programs, discriminate against a program beneficiary or prospective program on the basis of religion, a religious belief, a refusal to hold a religious belief, or a refusal to actively participate in a religious practice.

§ 54a.8 Right to services from an alternative provider.

(a) *General requirements.* If an otherwise eligible program beneficiary or prospective program beneficiary objects to the religious character of a program participant, within a reasonable period of time after the date of such objection, such program beneficiary shall have rights to notice, referral, and alternative services, as outlined in paragraphs (b) through (d) of this section. With respect to SAMHSA discretionary programs, for purposes of determining what is the appropriate Federal, State, or local government, the following principle shall apply: When SAMHSA provides funding directly to another unit of government, such as a State or local government, that unit of government is responsible for providing the alternative services. When SAMHSA provides discretionary grant funding directly to a nongovernmental organization, SAMHSA is the responsible unit of government.

(b) *Notice.* Program participants that refer an individual to alternative providers, and the appropriate Federal, State, or local governments that administer the applicable programs, shall ensure that notice of the individual's rights to services from an alternative provider is provided to all program beneficiaries or prospective beneficiaries. The notice must clearly articulate the program beneficiary's right to a referral and to services that reasonably meet the requirements of timeliness, capacity, accessibility, and equivalency as discussed in this section. A model notice is set out in appendix A to this part.

(c) *Referral to services from an alternative provider.* If a program beneficiary or a prospective program beneficiary objects to the religious character of a program participant that is a religious organization, that participating religious organization shall, within a reasonable time after the date of such objection, refer such individual to an alternative provider.

(1) When the State or local government is the responsible unit of government, the State shall have a system in place to ensure that such referrals are made. That system shall ensure that the following occurs:

(i) The religious organization that is a program participant shall, within a reasonable time after the date of such objection, refer the beneficiary to an alternative provider;

(ii) In making such referral, the religious organization shall consider any list that the State or local government makes available to entities in the geographic area that provide program services, which may include utilizing any treatment locator system developed by SAMHSA;

(iii) All referrals are to be made in a manner consistent with all applicable confidentiality laws, including, but not limited to, 42 CFR part 2 (''Confidentiality of Alcohol and Drug Abuse Patient Records'');

(iv) Upon referring a program beneficiary to an alternative provider, the religious organization shall notify the responsible unit of government of such referral; and

(v) The religious organization shall ensure that the program beneficiary makes contact with the alternative provider to which he or she is referred.

(2) When SAMHSA is the responsible unit of government, the referral process is as follows:

(i) When a program beneficiary requests alternative services, the religious organization will seek to make such a referral.

(ii) If the religious organization cannot locate an appropriate provider of alternative services, the religious organization will contact SAMHSA. They will work together to identify additional alternative providers, utilizing the SAMHSA Treatment Locator system, if appropriate.

(iii) The religious organization will contact these alternative providers and seek to make the referral, in a manner consistent with all applicable confidentiality laws, including, but not limited to, 42 CFR part 2 (''Confidentiality of Alcohol and Drug Abuse Patient Records'').

(iv) In the event the religious organization is still unable to locate an alternative provider, it may again contact SAMHSA for assistance.

(d) *Referral reporting procedures.* The program participant shall notify the appropriate Federal, State or local government agency that administers the program of such referral. If a State or local government is the responsible unit of government, it may determine its own reporting procedures. When SAMHSA is the responsible unit of government, this notification will occur during the course of the regular reports that may be required under the terms of the funding award.

(e) *Provision and funding of alternative services.* The responsible unit of government, as defined in paragraph (a) of this section, shall provide to an otherwise eligible program beneficiary or prospective program beneficiary who objects to the religious character of a program participant, services and fund services from an alternative provider that is reasonably accessible to, and has the capacity to provide such services to the individual. Such services shall have a value that is not less than the value of the services that the individual would have received from the program participant to which the individual had such objection. The appropriate State or local governments that administer SAMHSA-funded programs shall ensure that notice of their right to alternative services is provided to applicants or recipients. The alternative provider need not be a secular organization. It must simply be a provider to which the program beneficiary has no religious objection.

(1) When the State receives a discretionary grant from SAMHSA, it shall utilize its own implementation procedures for these provisions and shall use funds from the SAMHSA discretionary grant to finance such alternative services, as needed;

(2) When the local government receives a discretionary grant from SAMHSA, it shall utilize State implementation procedures for these provisions and shall use funds from the SAMHSA discretionary grant to finance such alternative services, as needed;

(3) When a religious organization receives a discretionary grant from SAMHSA, if a publicly funded alternative provider is available that is reasonably accessible and can provide equivalent services, the religious organization shall refer the beneficiary to

that provider. However, if such a provider is not available, the religious organization shall contract with an alternative provider to provide such services and may finance such services with funds from the SAMHSA discretionary grant.

§ 54a.9 Oversight of the Charitable Choice requirements.

In order to ensure that program funds are used in compliance with the SAMHSA Charitable Choice provisions, applicants for funds under applicable programs are required, as part of their applications for funding, to certify that they will comply with all of the requirements of the SAMHSA Charitable Choice provisions and the implementing regulations under this part.

§ 54a.10 Fiscal accountability.

(a) Religious organizations that receive applicable program funds for substance abuse services are subject to the same regulations as other nongovernmental organizations to account, in accordance with generally accepted auditing and accounting principles, for the use of such funds.

(b) Religious organizations shall segregate Federal funds they receive under applicable programs into a separate account from non-Federal funds. Only the Federal funds shall be subject to audit by the government under the SAMHSA program.

§ 54a.11 Effect on State and local funds.

If a State or local government contributes its own funds to supplement activities carried out under the applicable programs, the State or local government has the option to separate out the Federal funds or commingle them. If the funds are commingled, the provisions of this part shall apply to all of the commingled funds, in the same manner, and to the same extent, as the provisions apply to the Federal funds.

§ 54a.12 Treatment of intermediate organizations.

If a nongovernmental organization (referred to here as an ''intermediate organization''), acting under a contract or other agreement with the Federal Government or a State or local government, is given the authority under the contract or agreement to select nongovernmental organizations to provide services under any applicable program, the intermediate organization shall have the same duties under this part as the government. The intermediate organization retains all other rights of a nongovernmental organization under this part and the SAMHSA Charitable Choice provisions.

§ 54a.13 Educational requirements for personnel in drug treatment programs.

In determining whether personnel of a program participant that has a record of successful drug treatment for the preceding three years have satisfied State or local requirements for education and training, a State or local government shall not discriminate against education and training provided to such personnel by a religious organization, so long as such education and training is comparable to that provided by nonreligious organizations, or is comparable to education and training that the State or local government would otherwise credit for purposes of determining whether the relevant requirements have been satisfied.

§ 54a.14 Determination of nonprofit status.

The nonprofit status of any SAMHSA applicant can be determined by any of the following:

(a) Reference to the organization's listing in the Internal Revenue Service's (IRS) most recent list of tax-exempt organizations described in section 501(c)(3) of the IRS code.

(b) A copy of a currently valid IRS Tax exemption certificate.

(c) A statement from a State taxing body, State Attorney General, or other appropriate State official certifying that the applicant organization has a nonprofit status and that none of its net earnings accrue to any private shareholder or individuals.

(d) A certified copy of the organization's certificate of incorporation or similar document if it clearly establishes the nonprofit status of the organization.

(e) Any of the above proof for a State or national parent organization and a

statement signed by the parent organization that the applicant organization is a local nonprofit affiliate.

APPENDIX TO PART 54A—MODEL NOTICE OF INDIVIDUALS RECEIVING SUBSTANCE ABUSE SERVICES

MODEL NOTICE TO INDIVIDUALS RECEIVING SUBSTANCE ABUSE SERVICES

No provider of substance abuse services receiving Federal funds from the U.S. Substance Abuse and Mental Health Services Administration, including this organization, may discriminate against you on the basis of religion, a religious belief, a refusal to hold a religious belief, or a refusal to actively participate in a religious practice.

If you object to the religious character of this organization, Federal law gives you the right to a referral to another provider of substance abuse services. The referral, and your receipt of alternative services, must occur within a reasonable period of time after you request them. The alternative provider must be accessible to you and have the capacity to provide substance abuse services. The services provided to you by the alternative provider must be of a value not less than the value of the services you would have received from this organization.

PART 55a—PROGRAM GRANTS FOR BLACK LUNG CLINICS

Subpart A—General Provisions

Sec.

55a.101 Definitions.
55a.102 Who is eligible to apply for a Black Lung clinics grant?
55a.103 What criteria has HHS established for deciding which grant application to fund?
55a.104 What confidentiality requirements must be met?
55a.105 How must grantees carry out their projects?
55a.106 Provision for waiver by the Secretary.
55a.107 What other regulations apply?

Subpart B—Grants to States

55a.201 What is required for a State application?

Subpart C—Grants to Entities Other Than States

55a.301 What is required for an application from an entity other than a State?

AUTHORITY: Sec. 427(a), Federal Mine Safety and Health Act of 1977, 92 Stat. 100 (30 U.S.C. 937(a)).

SOURCE: 50 FR 7913, Feb. 27, 1985, unless otherwise noted.

Subpart A—General Provisions

§55a.101 Definitions.

Act, as used in this part, means the Federal Mine Safety and Health Act of 1977, as amended (30 U.S.C. 801 *et seq.*).

Secretary means the Secretary of Health and Human Services and any other officer or empolyee of the Department of Health and Human Services to whom the authority involved has been delegated.

Miner or *coal miner* means any individual who works or has worked in or around a coal mine or coal preparation facility in the extraction or preparation of coal. The term also includes an individual who works or has worked in coal mine construction or transportation in or around a coal mine, to the extent that the individual was exposed to coal dust as a result of employment.

§55a.102 Who is eligible to apply for a Black Lung clinics grant?

Any State or public or private entity may apply for a grant under this part.

§55a.103 What criteria has HHS established for deciding which grant application to fund?

(a) The Secretary will give preference to a State, which meets the requirements of this part and applies for a grant under this part, over other applicants in that State.

(b) Within the limits of funds available for these purposes the Secretary may award grants to assist in the carrying out of those programs which will in the Secretary's judgment best promote the purposes of section 427(a) of the Act, taking into account;

(1) The number of miners to be served and their needs; and

(2) The quality and breadth of services to be provided.

§55a.104 What confidentiality requirements must be met?

All information as to personal facts and circumstances obtained by the grantee's staff about recipients of services shall be held confidential and shall not be disclosed without the individual's consent except as may be required

by law or as may be necessary to provide service to the individual or to provide for audits with appropriate safeguards for confidentiality of patient records. Otherwise, information may be disclosed only in summary, statistical, or other form which does not identify particular individuals.

§ 55a.105 How must grantees carrry out their projects?

Grantees must carry out their projects in accordance with their applications and the provisions of this part.

§ 55a.106 Provision for waiver by the Secretary.

The Secretary may, for good cause shown, waive provisions of these regulations.

§ 55a.107 What other regulations apply?

Other regulations which apply to the Black Lung Clinics Program include, but are not limited to, the following:

42 CFR part 50, subpart D—Public Health Service grant appeals procedure;

42 CFR part 50, subpart E—Maximum allowable cost for drugs;

45 CFR part 16—Procedures of the Departmental Grant Appeals Board;

45 CFR part 19—Limitations on payment or reimbursement for drugs;

45 CFR part 74—Administration of grants;

45 CFR part 75—Informal grant appeals procedures;

45 CFR part 80—Nondiscrimination under programs receiving Federal assistance through the Department of Health and Human Services effectuation of title VI of the Civil Rights Act of 1964;

45 CFR part 81—Practice and procedure for hearings under part 80;

45 CFR part 84—Nondiscrimination on the basis of handicap in programs and activities receiving or benefiting from Federal financial assistance; and

45 CFR part 91—Nondiscrimination on the basis of age in HHS programs or activities receiving Federal financial assistance.

Subpart B—Grants to States

§ 55a.201 What is required for a State application?

An approvable State application must contain assurances that the State will:

(a) Provide the following services for active and inactive miners in the State:

(1) Primary care;

(2) Patient and family education and counseling;

(3) Outreach;

(4) Patient care coordination, including individual patient care plans for all patients;

(5) Antismoking advice; and

(6) Other symptomatic treatments.

(b) Provide medical services in consultation with a physician with special training or experience in the diagnosis and treatment of respiratory diseases.

(c) Meet all criteria for approval and designation by the Department of Labor under 20 CFR part 725 to perform disability examination and provide treatment under the Act.

(d) Use grant funds under this part to supplement and not supplant existing services of the State.

(e) Provide the services described above for those miners previously served by a Black Lung Clinic in the State for which grant support expires during the funding period of the State's grant.

(f) Provide services described above regardless of a person's ability to pay.

(g) Audit its expenditures from amounts received under this part in accordance with the provisions of Attachment P, Audit Requirements, of Office of Management and Budget Circular A–102, Uniform Requirements for Assistance to State and Local Governments, as adopted for the Department of Health and Human Services by 45 CFR part 74.

(Approved by the Office of Management and Budget under control number 0915–0081)

[50 FR 7913, Feb. 27, 1985, as amended at 50 FR 53156, Dec. 30, 1985]

Subpart C—Grants to Entities Other Than States

§ 55a.301 What is required for an application from an entity other than a State?

An approvable application must contain the following:

(a) A plan for the provision of the services required by § 55a.201(a), consistent with the requirements of § 55a.201 (b) and (c). The plan must also

contain at least the following elements:

(1) A description of the target population to whom services are to be provided, including a statement of the need for services;

(2) An assurance that charges shall be made for services rendered as follows:

(i) A schedule shall be maintained listing fees or payments for the provision of services, designed to cover reasonable costs of operations;

(ii) A schedule of discounts adjusted on the basis of a patient's ability to pay shall be maintained. The schedule of discounts must provide for a full discount to individuals and families with annual incomes at or below the poverty line established in accordance with section 673(2) of the Community Services Block Grant Act (42 U.S.C. 9902(2)), (except that nominal fees for service may be requested, but not required, from individuals and families with annual incomes at or below the poverty line). No discounts shall be provided to individuals and families with annual incomes greater than twice the poverty line; and

(iii) Where third-party payors (including Government Agencies) are authorized or under a legal obligation to pay all or a portion of such charges, all services covered by that reimbursement plan will be billed and every reasonable effort will be made to obtain payment.

(b) An assurance that no person will be denied services because of inability to pay.

(c) An assurance that grant funds received under this part will be used to supplement and not supplant existing services of the grantee.

(Approved by the Office of Management and Budget under control number 0915–0081)

[50 FR 7913, Feb. 27, 1985, as amended at 50 FR 53156, Dec. 30, 1985]

PART 56—GRANTS FOR MIGRANT HEALTH SERVICES

Subpart A—General Provisions

Sec.
56.101 Applicability.
56.102 Definitions.
56.103 Eligibility.
56.104 Application.
56.105 Accord with health planning.
56.106 Amount of grant.
56.107 Priorities for grants.
56.108 Use of grant funds.
56.109 Grant payments.
56.110 Nondiscrimination.
56.111 Confidentiality.
56.112 Publications and copyright.
56.113 Grantee accountability.
56.114 Applicability of 45 CFR part 74.

Subpart B—Grants for Planning and Developing Migrant Health Centers

56.201 Applicability.
56.202 Application.
56.203 Project elements.
56.204 Grant evaluation and award.

Subpart C—Grants for Operating Migrant Health Centers

56.301 Applicability.
56.302 Application.
56.303 Project elements.
56.304 Governing board.
56.305 Grant evaluation and award.

Subpart D—Grants for Operating Migrant Health Entities

56.401 Applicability.
56.402 Application.
56.403 Project elements.
56.404 Grant evaluation and award.

Subpart E—Grants for Planning and Developing Migrant Health Programs

56.501 Applicability.
56.502 Application.
56.503 Project elements.
56.504 Grant evaluation and award.

Subpart F—Grants for Operating Migrant Health Programs

56.601 Applicability.
56.602 Application.
56.603 Project elements.
56.604 Grant evaluation and award.

Subpart G—Grants for Technical Assistance

56.701 Applicability.
56.702 Application.
56.703 Project elements.
56.704 Grant evaluation and award.

Subpart H—Acquisition and Modernization of Existing Buildings

56.801 Applicability of 42 CFR part 51c, subpart E.

AUTHORITY: Secs. 215, 319, Public Health Service Act (42 U.S.C. 216, 247d).

SOURCE: 42 FR 60406, Nov. 25, 1977, unless otherwise noted.

Subpart A—General Provisions

§ 56.101 Applicability.

The regulations of this subpart are applicable to all grants authorized by section 319 of the Public Health Service Act (42 U.S.C. 247d).

§ 56.102 Definitions.

As used in this part:

(a) *Act* means the Public Health Service Act (42 U.S.C. 201 *et seq.*), as amended.

(b)(1) *Agriculture* means farming in all its branches, including—

(i) Cultivation and tillage of the soil;

(ii) The production, cultivation, growing, and harvesting of any commodity grown on, in, or as an adjunct to or part of a commodity grown in, or on, the land; and

(iii) Any practice (including preparation and processing for market and delivery to storage or to market or to carriers for transportation to market) performed by a farmer or on a farm incident to or in conjunction with an activity described in subsection (ii).

(c) *Catchment area* means the geographic area served by a project funded under section 319 of the Act.

(d) *Environmental health services* means the detection and alleviation of unhealthful conditions of the environment of the persons served by the project, such as problems associated with water supply, sewage treatment, solid waste disposal, rodent and parasite infestation, field sanitation, and housing conditions and the treatment of medical conditions arising therefrom. For the purposes of this part, the detection and alleviation of unhealthful conditions of the environment includes the notification of appropriate Federal, State, or local authorities responsible for correcting such conditions and the making of arrangements therefor with such authorities.

(e) *Health professionals* means professionals (such as physicians, dentists, nurses, podiatrists, optometrists, and physicians' extenders) who are engaged in the delivery of health services and who meet all applicable Federal or State requirements to provide their professional services.

(f) *High impact area* means a catchment area which has not less than 6,000 migratory agricultural workers, seasonal agricultural workers, and members of the families of such workers residing within its boundaries for more than two months in the most recent calendar year for which statistical data acceptable to the Secretary is available.

(g)(1) *Migrant health center* means an entity which either through its staff and supporting resources or through contracts or cooperative arrangements with other public or private entities provides for migratory agricultural workers, seasonal agricultural workers, and the members of the families of such workers, within its catchment area:

(i) Primary health services;

(ii) As determined by the Secretary to be appropriate for particular centers, supplemental health services necessary for the adequate support of primary health services;

(iii) Referral to providers of supplemental health services and payment, as determined by the Secretary to be appropriate and feasible, for the provision of such services;

(iv) Environmental health services, as determined by the Secretary to be appropriate for particular centers;

(v) As determined by the Secretary to be appropriate for particular centers, infectious and parasitic disease screening and control services;

(vi) As determined by the Secretary to be appropriate for particular centers, accident prevention programs, including prevention of excessive exposure to pesticides through, but not limited to, notification of appropriate Federal, State or local authorities of hazardous conditions due to pesticide use; and

(vii) Information on the availability and proper use of health services.

(2) For purposes of paragraph (g)(1) of this section, the provision of a given service by a center will be determined by the Secretary to be appropriate where

(i) There is a need, as determined by the Secretary, for the provision of such service to individuals described in paragraph (g)(1) of this section in the catchment area; and

(ii) The provision of such service by the center is feasible, taking into consideration the center's projected revenues, other resources, and grant support under this part.

(h) *Migratory agricultural worker* means an individual whose principal employment is in agriculture on a seasonal basis, who has been so employed within the last 24 months, and who establishes for the purpose of such employment a temporary place of abode;

(i) *Nonprofit*, as applied to any private agency, institution, or organization, means one which is a corporation or association, or is owned and operated by one or more corporations or associations, no part of the net earnings of which inures, or may lawfully inure, to the benefit of any private shareholder or individual.

(j) *Physician* means a licensed doctor of medicine or doctor of osteopathy.

(k) *Primary care* means preventive, diagnostic, treatment, consultant, referral, and other services rendered by physicians (including, as appropriate, physicians' extenders), routine associated laboratory services and diagnostic radiologic services, and emergency health services.

(l) *Primary health services* means:

(1) Diagnostic, treatment, consultative referral, and other services rendered by physicians and, where feasible, by physicians' extenders, such as physicians' assistants, nurse clinicians, and nurse practitioners;

(2) Diagnostic laboratory services and diagnostic radiologic services;

(3) Preventive health services, including children's eye and ear examinations, prenatal and post-partum care, perinatal services, well child care (including periodic screening), immunizations, and voluntary family planning services;

(4) Emergency medical services, including provision, through clearly defined arrangements, for access of users of the center to health care for medical and dental emergencies during and after the center's regularly scheduled hours;

(5) Transportation services as needed for adequate patient care, sufficient so that residents of the catchment area served by the center with special difficulties of access to services provided by the center receive such services; and

(6) Preventive dental services provided by a licensed dentist or other qualified personnel, including—

(i) Oral hygiene instruction;

(ii) Oral prophylaxis, as necessary; and

(iii) Topical application of fluorides, and the prescription of fluorides for systemic use when not available in the community water supply.

(m) *Seasonal agricultural worker* means an individual whose principal employment is in agriculture on a seasonal basis and who is not a migratory agricultural worker.

(n) *Secretary* means the Secretary of Health and Human Services and any other officer or employee of the Department of Health and Human Services to whom the authority involved has been delegated.

(o) *Supplemental health services* means health services which are not included as primary health services and which are:

(1) Inpatient and outpatient hospital services;

(2) Home health services;

(3) Extended care facility services;

(4) Rehabilitative services (including physical and occupational therapy) and long-term physical medicine;

(5) Mental health services, including services of psychiatrists, psychologists, and other appropriate mental health professionals;

(6) Dental services other than those provided as primary health services;

(7) Vision services, including routine eye and vision examinations and provision of eyeglasses, as appropriate and feasible;

(8) Allied health services;

(9) Pharmaceutical services, including the provision of prescription drugs;

(10) Therapeutic radiologic services;

(11) Ambulatory surgical services;

(12) Public health services (including nutrition education and social services);

(13) Health education services; and

(14) Services including the services of outreach workers, which promote and

facilitate optimal use of primary health services and services referred to in the preceding subparagraphs of this paragraph and, if a substantial number of individuals in the population served by the center are of limited English-speaking ability, the services of outreach workers and other personnel fluent in the language or languages spoken by such individuals.

§ 56.103 Eligibility.

Any public or nonprofit private entity is eligible to apply for a grant under this part.

§ 56.104 Application.

(a) An application for a grant under this part shall be submitted to the Secretary at such time and in such form and manner as the Secretary may prescribe.

(b) The application shall contain a budget and narrative plan of the manner in which the applicant intends to conduct the project and carry out the requirements of this part. The application must describe how and the extent to which the project has met, or plans to meet, each of the requirements in subpart B (relating to grants for planning and development of migrant health centers), subpart C (relating to grants for the operation of migrant health centers), subpart D (relating to grants for the operation of migrant health entities), subpart E (relating to grants for planning and developing migrant health programs), subpart F (relating to grants for the operation of migrant health programs), or subpart G (relating to grants for technical assistance), as applicable. In addition, applications must include:

(1) A statement of specific, measurable objectives and the methods to be used to assess the achievement of the objectives in specified time periods and at least on an annual basis.

(2) The precise boundaries of the catchment area to be served by the applicant. In addition, the application shall include information sufficient to enable the Secretary to determine that the applicant's catchment area meets the following criteria:

(i) The size of such area is such that the services to be provided by the applicant are available and accessible to the residents of the area promptly and as appropriate;

(ii) The boundaries of such area conform, to the extent practicable, to relevant boundaries of political subdivisions, school districts, and areas served by Federal and State health and social service programs; and

(iii) The boundaries of such area eliminate, to the extent possible, barriers resulting from the area's physical characteristics, its residential patterns, its economic and social groupings, and available transportation.

(3)(i) The number of migratory agricultural workers and members of their families, and seasonal agricultural workers and members of their families which resided in the project's catchment area in the most recent calendar year for which statistical data acceptable to the Secretary is available; and

(ii) The approximate period or periods of residence of all groups of migratory agricultural workers and their families counted under paragraph (b)(3)(i) of this section.

(4) The results of an assessment of the need that the population to be served has for the services to be provided by the project (or in the case of applications for planning and development projects, the methods to be used in assessing such need), taking into consideration the following factors:

(i) Available health resources in relation to size of the catchment area and population of migratory and seasonal agricultural workers and their families in such area, including appropriate ratios of primary care physicians in general or family practice, internal medicine, pediatrics, or obstetrics and gynecology, to such population;

(ii) Health indices for such population, such as infant mortality rate;

(iii) Economic factors affecting such population's use of health services, such as percentage of such population with incomes below the poverty level;

(iv) Demographic factors affecting such population's need and demand for health services, such as percentage of such population age 65 and over; and

(v) Special factors of access resulting from the conditions of employment of

such workers (including working hours, housing, and sanitation).

(5) Position descriptions for personnel who will be utilized in carrying out the activities of the project and a statement indicating the need for the positions to be supported with grant funds to accomplish the objectives of the project.

(6) Letters and other forms of evidence showing that efforts have been made to secure financial and professional assistance and support for the project within the proposed catchment area and the continuing involvement of the community in the development and operation of the project.

(7) An assurance that an independent certified public accountant will be engaged to certify that the project's system for the management and control of its finances will be in accord with sound financial management practices, including applicable Federal requirements.

(8) A list of all services proposed to be provided by the project.

(9) A list of services which are to be provided directly by the project through its own staff and resources and a description of any contractual or other arrangements (including copies of documents, where available) entered into, or planned for the provision of services.

(10) The schedule of fees and/or payments and schedule of discounts for services provided by the project.

(11) If the applicant provides services to populations other than migratory and seasonal agricultural workers and their families, identification of such populations.

NOTE: Funds granted under this part and non-Federal funds required to be expended by the project as a condition of any such grant may not be used to provide services to individuals who are not migratory or seasonal agricultural workers or members of the families of such workers.

(12) Evidence that all applicable requirements for review and/or approval of the application under title XV of the Act have been met.

(13) An assurance that the project will be conducted in accordance with the applicable requirements of this part.

(c) The application must be executed by an individual authorized to act for the applicant and to assume on behalf of the applicant the obligations imposed by the statute, the applicable regulations of this part, and any additional conditions of the grant.

(Sec. 215, Public Health Service Act, 58 Stat. 690, 67 Stat. 631 (42 U.S.C. 216); sec. 329, Public Health Service Act, 95 Stat. 569 (42 U.S.C. 254b)).

[42 FR 60406, Nov. 25, 1977, as amended at 48 FR 29202, June 24, 1983; 48 FR 45559, Oct. 6, 1983]

§ 56.105 Accord with health planning.

A grant may be made under this part only if the applicable requirements of title XV of the Act relating to review and approval by the appropriate health planning agencies have been met.

§ 56.106 Amount of grant.

(a) The amount of any award under this part will be determined by the Secretary on the basis of his estimate of the sum necessary for a designated portion of direct project costs plus an additional amount for indirect costs, if any, which will be calculated by the Secretary either:

(1) On the basis of the estimate of the actual indirect costs reasonably related to the project; or

(2) On the basis of a percentage of all, or a portion of, the estimated direct costs of the project when there are reasonable assurances that the use of such percentage will not exceed the approximate actual indirect costs. Such award may include an estimated provisional amount for indirect costs or for designated direct costs (such as fringe benefit rates) subject to upward (within the limits of available funds) as well as downward adjustments to actual costs when the amount properly expended by the grantee for provisional items has been determined by the Secretary: *Provided, however,* That no grant shall be made for an amount in excess of the total costs found necessary by the Secretary to carry out the project.

(i) In determining the percentage of project costs to be borne by the grantee, factors which the Secretary will take into consideration will include the following:

(A) The ability of the grantee to finance its share of project costs from non-Federal sources;

(B) The need in the area served by the project for the services to be provided; and

(C) The extent to which the project will provide services in an innovative manner which the Secretary desires to stimulate in the interest of developing more effective health service delivery systems on a regional or national basis.

(ii) At any time after approval of an application under this part, the Secretary may retroactively agree to a percentage of project costs to be borne by the grantee lower than that determined pursuant to paragraph (a)(2)(i) of this section where he finds that changed circumstances justify a smaller contribution.

(iii) In determining the grantee's share of project costs, costs borne by Federal grant funds, or costs used to match other Federal grants, may not be included except as otherwise provided by law or regulations.

(b) All grant awards shall be in writing, and shall set forth the amount of funds granted and the period for which support is recommended.

(c) Neither the approval of any project nor any grant award, shall commit or obligate the United States in any way to make any additional, supplemental, continuation, or other award with respect to any approved project or portion thereof. For continuation support, grantees must make separate application.

§ 56.107 Priorities for grants.

(a) Grants under sections 319(c)(1)(A), 319(d)(1)(A), 319(d)(1)(B) of the Act and subparts B, C, and D of this part shall be made in accordance with the following priorities:

(1) Highest priority will be given to approvable applications which propose to serve catchment areas in which 6,000 or more migratory agricultural workers and members of their families reside for more than two months in the calendar year.

(2) Second priority will be given to approvable applications which propose to serve catchment areas in which fewer than 6,000 but more than 1,000 migratory agricultural workers and members of their families reside for more than two months in the applicable calendar year.

(3) Third priority will be given to approvable applications which propose to serve catchment areas in which migratory agricultural workers and members of their families reside but in which fewer than 1,000 such persons reside for more than two months in the applicable calendar year.

(4) Fourth priority will be given to approvable applications which propose to serve catchment areas in which migratory agricultural workers and members of their families reside in the applicable calendar year but in which no such persons reside for more than two months in such year.

(5) Fifth priority will be given to approvable applications which propose to serve catchment areas in which no migratory agricultural workers or members of their families reside for any period in the applicable calendar year but in which 6,000 or more seasonal agricultural workers and the members of their families reside.

(6) Lowest priority will be given to approvable applications which propose to serve catchment areas in which no migratory agricultural workers or members of their families reside for any period in the applicable calendar year and in which fewer than 6,000 seasonal agricultural workers and the members of their families reside.

(b) Grants under sections 319(c)(1)(B) and 319(d)(1)(C) of the Act and subparts E and F of this part will be made in accordance with priorities set forth in paragraphs (a)(2) through (a)(6) of this section, in the order set forth.

(c) For the purposes of this section, the applicable calendar year will be the calendar year for which data is provided in accordance with § 56.104(b)(3) of this subpart.

§ 56.108 Use of grant funds.

(a) Any funds granted pursuant to this part, as well as other funds to be used in performance of the approved project, may be expended solely for carrying out the approved project in accordance with section 319 of the Act, the applicable regulations of this part, the terms and conditions of the award,

and the applicable cost principles prescribed in subpart Q of 45 CFR part 74.

(b) Project funds awarded under this part may be used for, but need not be limited to, the following:

(1) The costs of acquiring and modernizing existing buildings (including the costs of amortizing the principal of, and paying interest on, loans), but only in accordance with subpart H of this part and as approved in the grant award;

(2) The costs of obtaining technical assistance to develop and improve the management or service capability of the project but only as approved by the Secretary;

(3) To reimburse members of the grantee's governing board established pursuant to § 56.304 of subpart C, or advisory council established pursuant to § 56.603(q) of subpart F, if any, for reasonable expenses actually incurred by reason of their participation in the activities of such board or council;

(4) To reimburse such governing board or advisory council members who are individuals eligible to be served by the project for wages lost by reason of participation in the activities of such board or council;

(5) The cost of delivering health services to migratory agricultural workers, seasonal agricultural workers and the members of their families within the project's catchment area, within the following limitations: grant funds may be used to pay the full cost of project services to such individuals and families with annual incomes at or below those set forth in the most recent ''CSA Income Poverty Guidelines'' (45 CFR 1060.2) issued by the Community Services Administration, and to pay the portion of the cost of services provided in accordance with the schedule of discounts which, under such schedule, is uncompensated; *Provided*, That

(i) Charges will be made to such individuals and families in accordance with § 56.303(f) of subpart C or § 56.603(e) of subpart F, as applicable;

(ii) Reasonable effort shall be made to collect such charges under a billing and collections system; and

(iii) The charge to grant funds shall exclude any amounts collected pursuant to paragraph (b)(5)(ii) of this section;

(6) The cost of insurance for medical emergency and out-of-area coverage; and

(7) The cost of providing to the staff and governing board, if any, of the project training related to the management of an ambulatory care facility, and to the staff of a project funded under subpart C, D, or F of this part, training related to the provision of primary, supplemental and environmental health services provided or to be provided by the project, consistent with the applicable requirements of 45 CFR part 74.

(c) Prior approval by the Secretary of revisions of the budget and project plan is required whenever there is to be a significant change in the scope or nature of project activities.

§ 56.109 Grant payments.

The Secretary shall from time to time make payments to a grantee of all or a portion of any grant award, either in advance or by way of reimbursement for expenses incurred or to be incurred, to the extent he determines such payments necessary to promote prompt initiation and advancement of the approved project.

§ 56.110 Nondiscrimination.

(a) Attention is called to the requirements of title VI of the Civil Rights Act of 1964 (78 Stat. 252, 42 U.S.C. 2000d *et seq.*) and in particular section 601 of such Act which provides that no person in the United States shall on the grounds of race, color, or national origin be excluded from participation in, be denied the benefits of, or be subjected to discrimination under any program or activity receiving Federal financial assistance. A regulation implementing such title VI, which applies to grants made under this part, has been issued by the Secretary of Health and Human Services with the approval of the President (45 CFR part 80). In addition, no person shall, on the grounds of age, sex, creed, or marital status (unless otherwise medically indicated), be excluded from participation in, be denied the benefits of, or be subjected to discrimination under any program or activity so receiving Federal financial assistance.

(b) Attention is called to the requirements of section 504 of the Rehabilitation Act of 1973, as amended, which provides that no otherwise qualified handicapped individual in the United States shall, solely by reason of his handicap, be excluded from participation in, be denied the benefits of, or be subjected to discrimination under any program or activity receiving Federal financial assistance.

§ 56.111 Confidentiality.

All information as to personal facts and circumstances obtained by the project staff about recipients of services shall be held confidential and shall not be divulged without the individual's consent except as may be required by law or as may be necessary to provide service to the individual or to provide for medical audits by the Secretary or his designee with appropriate safeguards for confidentiality of patient records. Otherwise, information may be disclosed only in summary, statistical, or other form which does not identify particular individuals.

§ 56.112 Publications and copyright.

Except as may otherwise be provided under the terms and conditions of the award, the grantee may copyright without prior approval any publications, films, or similar materials developed or resulting from a project supported by a grant under this part, subject, however, to a royalty-free, nonexclusive, and irrevocable license or right in the Government to reproduce, translate, publish, use, disseminate, and dispose of such materials and to authorize others to do so.

§ 56.113 Grantee accountability.

(a) *Accounting for grant award payments.* All payments made by the Secretary shall be recorded by the grantee in accounting records separate from the records of all other funds, including funds derived from other grant awards. With respect to each approved project, the grantee shall account for the sum total of all amounts paid as well as other funds and in-kind contributions by presenting or otherwise making available evidence satisfactory to the Secretary of expenditures for direct and indirect costs meeting the requirements of this part: *Provided, however,* That when the amount awarded for indirect costs was based on a predetermined fixed-percentage of estimated direct costs, the amount allowed for indirect costs shall be computed on the basis of such predetermined fixed-percentage rates applied to the total, or a selected element thereof, of the reimbursable direct costs incurred.

(b) *Accounting for interest earned on grant funds.* Pursuant to section 203 of the Intergovernmental Cooperation Act of 1968 (42 U.S.C. 4213), a State will not be held accountable for interest earned on grant funds, pending their disbursement for grant purposes. A State, as defined in section 102 of the Intergovernmental Cooperation Act, means any one of the several States, the District of Columbia, Puerto Rico, any territory or possession of the United States, or any agency or instrumentality of a State, but does not include the government of the political subdivisions of the State. All grantees other than a State, as so defined, must return all interest earned on grant funds to the Federal Government.

(c) *Grant closeout*—(1) *Date of final accounting.* A grantee shall render, with respect to each approved project, a full account, as provided herein, as of the date of the termination of grant support. The Secretary may require other special and periodic accounting.

(2) *Final settlement.* There shall be payable to the Federal Government as final settlement with respect to each approved project, the sum of:

(i) Any amount not accounted for pursuant to paragraph (a) of this section;

(ii) Any credits for earned interest pursuant to paragraph (b) of this section;

(iii) Any other amounts due pursuant to subparts F, M, and O of 45 CFR part 74.

Such total sum shall constitute a debt owed by the grantee to the Federal Government and shall be recovered from the grantee or its successors or assignees by setoff or other action as provided by law.

§ 56.114 Applicability of 45 CFR part 74.

The provisions of 45 CFR part 74, establishing uniform administrative requirements and cost principles, shall apply to all grants under this part to States and local governments as those terms are defined in subpart A of that part 74. The relevant provisions of the following subparts of part 74 shall also apply to grants to all other grantee organizations under this part:

45 CFR PART 74

Subpart
A General.
B Cash depositories.
C Bonding and insurance.
D Retention and custodial requirements for records.
F Grant-related income.
G Matching and cost sharing.
K Grant payment requirements.
L Budget revision procedures.
M Grant closeout, suspension, and termination.
O Property.
Q Cost principles.

Subpart B—Grants for Planning and Developing Migrant Health Centers

§ 56.201 Applicability.

The regulations of this subpart, in addition to the regulations of subpart A of this part, are applicable to grants awarded pursuant to section 319(c)(1)(A) of the Act for projects for planning and developing migrant health centers in high impact areas.

§ 56.202 Application.

To be approved by the Secretary under this subpart, an application for a grant must, in addition to meeting the requirements of § 56.104 of subpart A of this part, contain information sufficient to enable the Secretary to determine that the project for which the grant is sought will meet the requirements of this part.

§ 56.203 Project elements.

A project for planning and developing a migrant health center supported under this subpart must:

(a) Determine (by survey or other appropriate means) the approximate number of (1) migratory agricultural workers and the members of their families, and (2) seasonal agricultural workers and the members of their families, within the proposed catchment area in the calendar year in which the grant is made and the period of time these workers and their families reside in the catchment area during such year.

(b) Prepare an assessment of the need of the population proposed to be served by the migrant health center for the services set forth in § 56.102(g)(1) of subpart A of this part. This assessment of need must, at a minimum, include the factors listed in § 56.104(b)(3) (i)–(iv).

(c) Design a migrant health center program for such population, based on the assessment prepared pursuant to paragraph (b) of this section which indicates in detail how the proposed center will fulfill the needs identified in that assessment and meet the requirements of subpart C of this part.

(d) Develop a plan for the implementation of the program designed pursuant to paragraph (c) of this section. This implementation plan must provide for the time-phased recruitment and training of the personnel essential for the operation of a migrant health center and the gradual assumption of operational status of the project so that the project will, in the judgment of the Secretary, meet the requirements contained in subpart C of this part by the end of the project period.

(e) Implement the plan developed pursuant to paragraph (d) of this section in accordance with such paragraph.

(f) Make efforts to secure within the proposed catchment area of such center, to the extent possible, financial and professional assistance and support for the project.

(g) Initiate and encourage continuing community involvement in the development and operation of the project through, for example, contributions or loans of cash, services, equipment, full- or part-time staff, space, materials, or facilities.

(h) Provide for sufficient staff, qualified by training and experience, to carry out the project and establish standards and qualifications for personnel (including the project director).

(i) Utilize, to the maximum extent feasible, other Federal, State, local, and private resources available for support of the project, prior to use of project funds under this subpart.

(j) Provide the means for evaluating the project's progress in achievement of its specific objectives, and submit such progress reports on the project as the Secretary may from time to time request.

§ 56.204 Grant evaluation and award.

(a) Within the limits of funds determined by the Secretary to be available for such purpose, the Secretary may award grants under this subpart to applicants therefor which, in his judgment, will provide needed health services in a catchment area which will not be served by another project funded under this part and meet the applicable requirements of section 319(c)(1)(A) of the Act and this part, in accordance with priorities established pursuant to section 319(b) of the Act and § 56.107 of subpart A of this part; *Provided*, That in the case of applicants which propose to serve substantially the same catchment areas or where available funds are insufficient to fund all approvable applications within a priority category specified in § 56.107,

(1) Priority shall be given to applications submitted by community-based organizations which are representative of the population to be served by the project. For purposes of this paragraph, an applicant shall be deemed to be such an organization if it provides a formal mechanism (such as membership on the organization's governing body or membership on an advisory body) which gives migratory seasonal agricultural workers and their families significant involvement in the formulation of the organization's policies; and

(2) Where all such applicants are community-based organizations representative of the population to be served by the project, the Secretary shall award the grant to the applicants which will, in his judgment, best promote the purposes of section 319(c)(1)(A) of the Act and the applicable regulations of this part, taking into account with respect to each application:

(i) The degree to which the proposed project satisfactorily provides for the elements set forth in § 56.203;

(ii) The administrative and management capability of the applicant;

(iii) The extent to which community resources will be utilized in the project; and

(iv) The degree to which the applicant intends to integrate services supported by a grant under this part with health services provided under other federally assisted health services or reimbursement programs or projects.

(b) The Secretary shall award no more than two grants under this subpart for the same project.

Subpart C—Grants for Operating Migrant Health Centers

§ 56.301 Applicability.

The regulations of this subpart, in addition to the regulations of subpart A of this part, are applicable to grants awarded pursuant to section 319(d)(1)(A) of the Act for the costs of operation of migrant health centers in high impact areas.

§ 56.302 Application.

To be approved by the Secretary under this subpart, an application for a grant must, in addition to meeting the requirements of § 56.104 of subpart A of this part,

(a) Be submitted by an entity (which may be a co-applicant) which the Secretary determines is a migrant health center, and

(b) Contain information sufficient to enable the Secretary to determine that the center will meet the requirements of this part.

§ 56.303 Project elements.

A migrant health center supported under this subpart must:

(a) Provide the health services of the center so that such services are available and accessible promptly, as appropriate, and in a manner which will assure continuity of service to the migratory and seasonal agricultural workers and their families within the center's catchment area.

(b) Implement a system for maintaining the confidentiality of patient

records in accordance with the requirements of § 56.111 of subpart A of this part.

(c) Have an ongoing quality assurance program which provides for the following:

(1) Organizational arrangements, including a focus of responsibility, to support the quality assurance program and the provision of high quality patient care;

(2) Periodic assessment of the appropriateness of the utilization of services and the quality of services provided or proposed to be provided by the center, and by other providers through contract or other cooperative arrangement with the center. Such assessments must:

(i) Be conducted by physicians or by other appropriate health professionals under the supervision of physicians or, as appropriate, by health professionals who are peers of the health professionals who provided the services;

(ii) Be based on the systematic collection and evaluation of patient records; and

(iii) Identify and document the necessity for change in the provision of services by the center and result in the institution of such change, where indicated.

(d) Develop management and control systems which are in accordance with sound financial management procedures, including the provision for an audit (1) conducted in accordance with the ''Guide for Audits of Migrant Health Grants'' of the DHHS Audit Agency, and (2) conducted with reasonable frequency, usually annually but not less frequently than every two years (unless waived for cause by the Secretary), to be made by qualified individuals who are sufficiently independent of those who authorize the expenditure of Federal funds to produce unbiased opinions, conclusions, or judgments, and to determine, at a minimum, the fiscal integrity of grant financial transactions and reports, and compliance with the applicable regulations of this part and the terms and conditions of the grant.

(e) Where the cost of care and services furnished by or through the center is to be reimbursed under title XIX or title XX of the Social Security Act, obtain or make every reasonable effort to obtain a written agreement with the title XIX or title XX State agency for such reimbursement.

(f) Have prepared a schedule of fees or payments for the provision of its services designed to cover its reasonable costs of operation and a corresponding schedule of discounts adjusted on the basis of the patient's ability to pay. The schedule of discounts must provide for a full discount to individuals and families with annual incomes at or below those set forth in the most recent CSA Poverty Income Guidelines (42 CFR 1060.2) (except that nominal fees for service may be collected from such individuals and families) and for no discount to individuals and families with annual incomes greater than twice those set forth in such Guidelines.

(g) Make every reasonable effort, including the establishment of systems for eligibility determination, billing, and collection, to

(1) Collect reimbursement for its costs in providing health services to persons who are entitled to insurance benefits under title XVIII of the Social Security Act, to medical assistance under a State plan approved under title XIX of such Act, to social services and family planning under title XX of such Act, or to assistance for medical expenses under any other public assistance program, grant program, or private health insurance or benefit program on the basis of the schedule of fees prepared pursuant to paragraph (f) of this section without application of any discounts, and

(2) Secure from patients payments for services in accordance with the schedule of fees and discounts required by paragraph (f) of this section.

(h) Have a governing board which meets the requirements of § 56.304.

(i) Have developed an overall plan and budget for the center that:

(1) Provides for an annual operating budget and a three-year financial management plan which includes all anticipated income and expenses related to items which would, under generally accepted accounting principles, be considered income and expense items;

(2) Provides for a capital expenditure plan for at least a three-year period

(including the year to which the operating budget described in paragraph (h)(i)(1) is applicable) which includes and identifies in detail the anticipated sources of financing for, and the objective of, each anticipated expenditure in excess of $100,000 related to the acquisition of land, the improvement of land, buildings, and equipment and the replacement, modernization and expansion of buildings and equipment which would, under generally accepted accounting principles, be considered capital items;

(3) Provides for plan review and updating at least annually; and

(4) Is prepared under the direction of the governing board by a committee consisting of representatives of the governing board, the administrative staff, and the medical staff, if any, of the center.

(j) Establish basic statistical data, cost accounting, management information, and reporting or monitoring systems which will enable the center to provide such statistics and other information as the Secretary may reasonably require relating to the center's costs of operation, patterns of utilization of services, and the availability, accessibility, and acceptability of its services, and to make such reports to the Secretary in a timely manner with such frequency as the Secretary may reasonably require.

(k) Review its catchment area annually to insure that the criteria set out in § 56.104(b)(2) are met and, if criteria are not met, revise its catchment area, with the approval of the Secretary, to conform with such criteria to the extent feasible.

(l) In the case of a center which serves a population including a substantial proportion of individuals of limited English-speaking ability, have developed a plan and made arrangements responsive to the needs of such populations for providing services to the extent practicable in the language and cultural context most appropriate to such individuals, and have identified an individual on its staff who is fluent in both that language and in English and whose responsibilities include providing guidance to such individuals and to appropriate staff members with respect to cultural sensitivities and bridging linguistic and cultural differences. If more than one non-English language is spoken by such group or groups, an individual or individuals fluent in those languages and English must be so identified.

(m) Be operated in a manner calculated to preserve human dignity and to maximize acceptability and effective utilization of services.

(n) To the extent possible, coordinate and integrate project activities with the activities of other federally funded, as well as State and local, health services delivery projects and programs serving the same population.

(o) Establish means for evaluating progress toward the achievement of the specific objectives of the project.

(p) Provide sufficient staff, qualified by training and experience, to carry out the activities of the center.

(q) Assure that facilities utilized in the performance of the project meet applicable fire and life safety codes.

(r) Utilize, to the maximum extent feasible, other Federal, State and local, and private resources available for support of the project, prior to use of project funds under this part.

(s) Provide for community participation through, for example, contributions of cash or services, loans of full- or part-time staff, equipment, space, materials, or facilities.

(t) Where the center will provide services through contract or other cooperative arrangements with other providers of services, the center must:

(1) Enter into the contract or arrangement only if the provider of services will provide the services in a timely manner and make the services accessible and acceptable to the population to be served;

(2) Make payment for services so provided only pursuant to agreements with the providers in accordance with a schedule of rates and payment procedures established and maintained by the center. The center must be prepared to substantiate that such rates are reasonable and necessary;

(3) Directly provide at least primary care unless the center has made arrangements for the provision of primary care which include transfer of all medical and financial information relating to such care to the center; and

(4) Enter into contracts or arrangements for the provision of primary health services only if alternative resources are reasonably available to provide these services in the event of termination of such arrangements.

(u) Operate in a manner such that no migratory or seasonal agricultural worker or member of their family will be denied service by reason of his or her inability to pay therefor. *Provided, however,* That a charge for the provision of services will be made to the extent that a third party (including a Government agency) is authorized or is under legal obligation to pay such charges.

§ 56.304 Governing board.

The governing board of the center must meet the following requirements:

(a) *Size.* The board must consist of at least 9 but not more than 25 members except that this provision may be waived by the Secretary for good cause shown.

(b) *Composition.* (1) A majority of the board members must be migratory and seasonal agricultural workers and members of their families who are or will be served by the center and who, as a group, represent the individuals being or to be served in terms of demographic factors, such as race, ethnicity, and sex.

(2) No more than two-thirds of the remaining members of the board may be individuals who derive more than 10 percent of their annual income from the health care industry.

(3) The remaining members of the board must be representatives of the community in which the center's catchment area is located and shall be selected for their expertise in relevant subject areas, such as community affairs, local government, finance and banking, legal affairs, trade unions, and other commercial and industrial concerns, or social services within the community.

(4) No member of the board shall be an employee of the center, or spouse or child, parent, brother or sister by blood of marriage of such an employee. The project director may be a nonvoting, ex-officio member of the board.

(c) *Selection of members.* The method of selection must be prescribed in the by-laws or other internal governing rules of the center. Such by-laws or other rules must specify a process of selection of individuals on the governing board who represent the population served or to be served by the center so that such individuals, as a group, are representative of such population. Such process of selection in the by-laws or other rules is subject to approval by the Secretary.

(d) *Functions and responsibilities.* (1) The governing board shall have authority for the establishment of policy in the conduct of the center.

(2) The governing board shall hold regularly scheduled meetings, at least once each month, except for periods of the year, as specified in the bylaws, during which monthly meetings are not practical due to migration out of the catchment area.

(3) Minutes must be kept for all regularly scheduled meetings of the board.

(4) The governing board shall have specific responsibility for:

(i) Approval of the selection and dismissal of the project director or chief executive officer of the center;

(ii) Establishing personnel policies and procedures, including selection and dismissal procedures, salary and benefit scales;

(iii) The development of bylaws which specify the responsibility of the board and principal operating officials of the centers;

(iv) Adopting policy for financial management practices, including a system to assure accountability for center resources, approval of the annual project budget, center priorities, eligibility for services, including criteria for partial payment schedules, and long-range financial planning;

(v) Evaluating center activities, including services utilization patterns, productivity of the center, patient satisfaction, achievement of project objectives, and development of a process for hearing and resolving patient grievances;

(vi) Assuring that the center is operated in compliance with applicable Federal, State, and local laws and regulations; and

(vii) Adopting health care policies including scope and availability of services, location and hours of services, and quality assurance procedures.

§ 56.305 Grant evaluation and award.

(a) Within the limits of funds determined by the Secretary to be available for such purpose, the Secretary may award grants under this subpart to applicants therefor which, in his judgment, will provide needed health services in a catchment area which will not be served by another project funded under this part and meet the applicable requirements of section 319(d)(1)(A) of the Act and this part, in accordance with priorities established pursuant to section 319(b) of the Act and § 56.107 of subpart A of this part: *Provided*, That in the case of applicants which propose to serve substantially the same catchment area or where available funds are insufficient to fund all approvable applications within a priority category specified in § 56.107, the Secretary will award grants to the applicants which, in his judgment, will best promote the purpose of section 319(d)(1)(A) of the Act and the applicable regulations of this part, taking into account with respect to each application:

(1) The extent to which the project would provide for the elements set forth in § 56.303;

(2) The capability of the applicant to provide quality health care services;

(3) The soundness of the financial management plan for assuring effective utilization of grant funds and maximizing non-grant revenue;

(4) The administrative and management capability of the applicant;

(5) The capability of the applicant to provide primary health services directly. In evaluating the relative capability of the applicant to provide such services directly, the Secretary shall take into consideration whether the direct provision of such services is inappropriate because:

(i) Provision of such services through contract or other arrangement would be more cost-effective;

(ii) Provision of such services directly would unnecessarily duplicate existing resources; or

(iii) Provision of such services other than directly would enhance the accessibility or acceptability of such services to the population to be served.

(6) The degree to which the applicant intends to integrate services supported by a grant under this part with health services provided under other federally assisted health services or reimbursement programs or projects;

(7) The extent that community resources will be utilized by the project; and

(8) Consistent with the other requirements of this part, the degree to which and the manner in which the applicant provides specific health services which the Secretary has, through publication of a notice in the FEDERAL REGISTER, established as services which should receive emphasis by applicants.

Subpart D—Grants for Operating Migrant Health Entities

§ 56.401 Applicability.

The regulations of this subpart, in addition to the regulations of subpart A of this part, are applicable to grants awarded pursuant to section 319(d)(1)(B) of the Act for the costs of operation of entities which intend to become migrant health centers and which provide health services to migratory agricultural workers, seasonal agricultural workers, and the members of their families in high impact areas.

§ 56.402 Application.

To be approved by the Secretary under this subpart, an application for a grant must, in addition to meeting the requirements of § 56.104 of subpart A of this part,

(a) Be submitted by an entity which the Secretary determines intends to become a migrant health center but which will not, at the time of the grant award, meet one or more of the requirements of paragraphs (a) through (l) of § 56.303 of subpart C of this part; and

(b) Contain information sufficient to enable the Secretary to determine that the project for which the grant is sought will meet the requirements of this part. Such information must include a plan which identifies which requirements of § 56.303 will not be met at

the time of grant award and provides a timetable for and a detailed statement of the means to be employed in meeting those requirements.

§ 56.403 Project elements.

A project for the operation of a migrant health entity supported under this subpart must:

(a) Meet all of the requirements of § 56.303 of this part, *Provided,* That the project will not be required to meet the requirements of paragraphs (c), (h), (i), or (n) of such section if the Secretary finds that meeting any such requirement is not feasible or practical at the time of grant award.

(b) Provide those services enumerated in § 56.102(g)(1) of subpart A of this part which are specified in the grant award.

(c) Meet the requirements of § 56.303 of subpart C of this part by the end of the period of support under section 319(d)(1)(B) of the Act and this subpart, in accordance with the plan submitted under § 56.402(b) of this subpart.

§ 56.404 Grant evaluation and award.

(a) Within the limits of funds determined by the Secretary to be available for such purposes, the Secretary may award grants under this subpart to applicants therefor which, in his judgment, will provide needed health services in a catchment area not served by another project funded under this part and meet the applicable requirements of section 319(d)(1)(B) of the Act and this part, in accordance with the priorities established pursuant to section 319(b) of the Act and § 56.107 of subpart A of this part; *Provided*, That in the case of applicants which propose to serve substantially the same catchment area or where available funds are insufficient to fund all approvable applications within a priority category specified in § 56.107, the Secretary will award the grant to the applicants which, in his judgment, will best promote the purposes of section 319(d)(1)(B) of the Act and the applicable regulations of this part, taking into account with respect to each application:

(1) The degree to which the project would provide the services enumerated in § 56.102(g)(1) and the feasibility of its providing all of such enumerated services by the end of the period of support under section 319(d)(1)(B) of the Act and this subpart;

(2) The degree to which the applicant intends to integrate services supported by a grant under this subpart with health services provided under other federally assisted health service or reimbursement programs or projects;

(3) The capability of the project to provide quality health care services;

(4) The administrative and management capability of the applicant; and

(5) The capability of the applicant to provide primary health services directly. In evaluating the relative capability of the applicant to provide such services directly, the Secretary shall take into consideration whether the direct provision of services is inappropriate because:

(i) Provision of such services through contract or other arrangement would be more cost-effective;

(ii) Provision of such services directly would unnecessarily duplicate existing resources; or

(iii) Provision of the services other than directly would enhance the accessibility or acceptability of the services to the population served.

(6) The extent to which community resources will be utilized by the project; and

(7) Consistent with the other requirements of this part, the degree to which and the manner in which the applicant provides specific health services which the Secretary has, through publication of a notice in the FEDERAL REGISTER, established as services which should receive emphasis by applicants.

(b) The Secretary shall:

(1) Make no more than two grants for the same entity under section 319(d)(1)(B) of the Act;

(2) Not make any grant under section 319(d)(1)(B) to an entity which, for the same project, has been awarded more than one grant under section 319(c) of the Act;

(3) Not make a grant under section 319(d)(1)(B) to an entity which has been awarded a grant under section 319(d)(1)(A) of the Act.

Subpart E—Grants for Planning and Developing Migrant Health Programs

§ 56.501 Applicability.

The regulations of this subpart, in addition to the regulations of subpart A of this part, are applicable to grants awarded pursuant to section 319(c)(1)(B) of the Act for projects to plan and develop migrant health programs to provide health services to migratory agricultural workers, seasonal agricultural workers and the members of their families in areas in which no migrant health center exists and in which not more than 6,000 migratory agricultural workers and their families reside for more than two months.

§ 56.502 Application.

To be approved by the Secretary under this subpart, an application for a grant must, in addition to meeting the requirements of § 56.104 of subpart A of this part,

(a) Be submitted for a project within a catchment area which

(1) Is not served, in whole or in part, by a migrant health center, and

(2) Has not more than 6,000 migratory agricultural workers and members of their families residing therein for more than 2 months per year; and

(b) Contain information sufficient to enable the Secretary to determine that the project for which the grant is sought will meet the requirements of this part.

§ 56.503 Project elements.

A project for the planning and development of a migrant health program supported under this subpart must:

(a) Determine (by survey or other appropriate means) the approximate number of

(1) Migratory agricultural workers and the members of their families, and

(2) Seasonal agricultural workers and the members of their families within the project's catchment area in the calendar year in which the grant is made and the period of time these workers and their families reside in the catchment area during such year.

(b) Prepare an assessment of need of the population proposed to be served by the migrant health program for the services set forth in § 56.603(a) of subpart F of this part. This assessment of need must, at a minimum, consider the factors listed in § 56.104(b)(3) (i)–(iv).

(c) Design a migrant health program for such population, based on such assessment, which indicates in detail how the proposed program will fulfill the needs identified in that assessment and meet the requirements of subpart F of this part.

(d) Develop a plan for the implementation of the program designed pursuant to paragraph (c) of this section. The implementation plan must provide for the time-phased recruitment and training of the personnel essential for the operation of a migrant health program and the gradual assumption of operational status of the project so that the project will, in the judgment of the Secretary, meet the requirements of subpart F of this part as of the end of the project period.

(e) Implement the plan developed pursuant to paragraph (d) of this section in accordance with such paragraph.

(f) Make efforts to secure within the proposed catchment area of such project, to the extent possible, financial and professional assistance and support for the project.

(g) Initiate and encourage continuing community involvement in the development and operation of the project through, for example, contributions or loans of cash, services, equipment, full- or part-time staff, space, materials, or facilities.

(h) Provide for sufficient staff, qualified by training and experience, to carry out the project and establish standards and qualifications for personnel (including the project director).

(i) Utilize, to the maximum extent feasible, other Federal, State, local, and private resources available for support of the project, prior to use of project funds under this subpart.

(j) Provide for the means of evaluating the project's progress in achievement of its specific objectives and submission of such progress reports on the project as the Secretary may from time to time request.

§ 56.504 Grant evaluation and award.

(a) Within the limits of funds determined by the Secretary to be available for such purpose, the Secretary may award grants under this subpart to applicants therefor which, in his judgment, will provide needed health services in a catchment area not served by another project funded under this part and meet the applicable requirements of section 319(c)(1)(B) of the Act and this part, in accordance with priorities established pursuant to section 319(b) of the Act and § 56.107 of subpart A of this part; *Provided*, That in the case of applicants which propose to serve substantially the same catchment areas or where available funds are insufficient to fund all approvable applications within a priority category specified in § 56.107,

(1) Priority shall be given to applications submitted by community-based organizations which are representative of the population to be served by the project. For purposes of this paragraph, an applicant shall be deemed to be such an organization if it provides a formal mechanism (such as membership on the organization's governing body or membership on an advisory body) which gives migratory and seasonal agricultural workers and their families significant involvement in the formulation of the organization's policies; and

(2) Where all such applicants are community-based organizations representative of the population to be served by the project, the Secretary shall award the grant to the applicants which will, in his judgment, best promote the purposes of section 319(c)(1)(B) of the Act and the applicable regulations of this part, taking into account with respect to each application:

(i) The degree to which the proposed project satisfactorily provides for the elements set forth in § 56.203;

(ii) The administrative and management capability of the applicant;

(iii) The extent to which community resources will be utilized in the project; and

(iv) The degree to which the applicant intends to integrate services supported by a grant under this part with health services provided under other federally assisted health services or reimbursement programs or projects.

(b) The Secretary shall award no more than one grant under this subpart for the same project.

Subpart F—Grants for Operating Migrant Health Programs

§ 56.601 Applicability.

The regulations of this subpart, in addition to the regulations of subpart A of this part, are applicable to grants awarded pursuant to section 319(d)(1)(C) of the Act for projects for operating programs to provide health services to migratory agricultural workers, seasonal agricultural workers and the members of their families in areas in which no migrant health center exists and in which not more than 6,000 migratory agricultural workers and their families reside for more than two months.

§ 56.602 Application.

To be approved by the Secretary under this subpart, an application for a grant must, in addition to meeting the requirements of § 56.104 of subpart A of this part,

(a) Be submitted for a project with a catchment area which

(1) Is not served, in whole or in part, by a migrant health center, and

(2) Has not more than 6,000 migratory agricultural workers and the members of their families residing therein for more than two months per year; and

(b) Contain information sufficient to enable the Secretary to determine that the project for which the grant is sought will meet the requirements of this part.

§ 56.603 Project elements.

A project for operating a migrant health program supported under this subpart must:

(a) Provide to migratory and seasonal agricultural workers and the members of their families in its catchment area one or more of the following groups of services so that such services are available and accessible promptly as appropriate, and in a manner which will assure continuity of care, as approved by the Secretary and

set forth (including specific services to be provided) in the grant award:

(1) Emergency health care, including diagnostic and treatment services in an ambulatory health care setting or hospital and dental services for the alleviation of acute pain and suffering for medical emergencies, when provision of such services is necessary to avoid jeopardizing the patient's condition until appropriate services from other providers can reasonably be obtained;

(2) Primary care;

(3) Arrangements with existing health care facilities to furnish primary health services (other than primary care);

(4) Other services set forth in § 56.102(g)(1) which are needed to improve the health of such individuals.

(b) Implement a system for maintaining the confidentiality of patient records in accordance with the requirement of § 56.111 of subpart A of this part.

(c) Develop management and control systems which are in accordance with sound financial management procedures, including the provision for an audit conducted in accordance with the DHHS Audit Agency Guide for Audits of Migrant Health Grants, as amended, on at least an annual basis (unless waived for cause by the Secretary), by an independent certified public accountant or public accountant licensed before December 31, 1970, to determine, at a minimum, the fiscal integrity of grant financial transactions and reports and compliance with the regulations of this part and the terms and conditions of the grant.

(d) When the cost of care and services furnished by or through the project is to be reimbursed under title XIX or title XX of the Social Security Act, obtain or make every reasonable effort to obtain a written agreement with the title XIX or title XX State agency for such reimbursement.

(e) Have prepared a schedule of fees or payments for the provision of its services designed to cover its reasonable costs of operation and a corresponding schedule of discounts adjusted on the basis of the patient's ability to pay. The schedule of discounts must provide for a full discount to individuals and families with annual incomes at or below those set forth in the most recent CSA Poverty Income Guidelines (42 CFR 1060.2) (except that nominal fees for service may be collected from individuals and families with annual incomes at or below such levels if imposition of such fees is consistent with project goals) and for no discount to individuals and families with annual incomes greater than twice those set forth in the Guidelines.

(f) Make every reasonable effort, including the establishment of systems for eligibility determination, billing, and collection, to

(1) Collect reimbursement for its costs in providing health services to persons who are entitled to insurance benefits under title XVIII of the Social Security Act, to medical assistance under a State plan approved under title XIX of such Act, to social services and family planning under title XX of such Act, or to assistance for medical expenses under any other public assistance program, grant program, or private health insurance or benefit program on the basis of the schedule of fees prepared pursuant to paragraph (e) of this section without application of any discounts, and

(2) Secure from patients payments for services in accordance with the schedule of fees and discounts required by paragraph (e) of this section.

(g) Develop an overall financial management plan and an operating budget for the project which include and identify, in accordance with generally accepted accounting principles, all anticipated current income and expense items and capital income and expense items, if any.

(h) Establish basic statistical data, cost accounting, management information, and reporting or monitoring systems which will meet the project's management needs and shall enable the project to provide such statistics and other information as the Secretary may reasonably require relating to the project's costs of operation, patterns of utilization of services, and the availability, accessibility, and acceptability of its services, and to make such reports to the Secretary in a timely manner with such frequency as the Secretary may reasonably require.

(i) Review its catchment area annually to insure that the criteria set out in § 56.104(b)(2) are met and, where such criteria are not met, revise its catchment area, with the approval of the Secretary, to conform with such criteria to the extent feasible.

(j) In the case of a project which serves a population including a substantial proportion of individuals of limited English-speaking ability, have a plan and made arrangements responsive to the needs of these populations for providing services to the extent practicable in the language and cultural context most appropriate to such individuals, and have identified an individual on its staff who is fluent in both that language and in English and whose responsibilities include providing guidance to such individuals and to appropriate staff members with respect to cultural sensitivities and bridging linguistic and cultural differences. If more than one non-English language is spoken by such group or groups, an individual or individuals fluent in those languages and English must be so identified.

(k) Be operated in a manner calculated to preserve human dignity and to maximize acceptability and effective utilization of services.

(l) To the extent possible, coordinate and integrate project activities with the activities of other federally funded, as well as State and local, health services delivery projects and programs serving the same population.

(m) Establish means for evaluating progress toward the achievement of the specific objectives of the project.

(n) Provide sufficient staff, qualified by training and experience, to carry out the activities of the project.

(o) Assure that facilities utilized in the performance of the project meet applicable fire and life safety codes.

(p) Utilize, to the maximum extent feasible, other Federal, State and local, and private resources available for support of the project, prior to use of project funds under this part.

(q) Provide for community participation through, for example, contributions of cash or services, loans of full- or part-time staff, equipment, space, materials, or facilities, and, to the extent feasible, establishment of an advisory council to advise with respect to the overall management of the project including services to be provided, the manner of their provision, and appointment of personnel. The membership of such advisory council shall be representative of the population to be served in terms of appropriate demographic characteristics, such as race, sex, and ethnicity.

(r) Where the project will provide services through contract or other cooperative arrangements with other providers of services, the project must

(1) Enter into any such contract or arrangement only if the provider of services will provide the services in a timely manner and make the services accessible and acceptable to the population to be served; and

(2) Make payment for services so provided in accordance with a schedule of rates and payment procedures established and maintained by the project. The project must be prepared to substantiate that such rates are reasonable and necessary.

(s) Operate in a manner such that no migratory or seasonal agricultural worker or member of their families will be denied service by reason of his or her inability to pay therefor. *Provided*, *however*, That a charge for the provision of services will be made to the extent that a third party (including a Government agency) is authorized or is under legal obligation to pay such charges.

(t) Have an ongoing quality assurance program as described in § 56.303(c) except as the Secretary finds that such a program would not be feasible.

§ 56.604 Grant evaluation and award.

(a) Within the limit of funds determined by the Secretary to be available the Secretary may award grants under this subpart to applicants therefor which will, in his judgment, provide needed health services in a catchment area which will not be served by another project funded under this part and meet the applicable requirements of section 319(d)(1)(C) of the Act and this subpart, in accordance with priorities established pursuant to section 319(b) of the Act and § 56.107 of subpart A of this part; *Provided*, That in the case of applicants which propose to

serve substantially the same catchment areas or where available funds are insufficient to fund all approvable applications within a priority category specified in § 56.107,

(1) Priority shall be given to applications submitted by community-based organizations which are representative of the population to be served by the project. For purposes of this paragraph, an applicant shall be deemed to be such an organization if it provides a formal mechanism (such as membership on the organization's governing body or membership on an advisory body) which gives migratory seasonal agricultural workers and their families significant involvement in the formulation of the organization's policies; and

(2) Where all such applicants are community-based organizations representative of the population to be served by the project, the Secretary shall award the grant to the applicants which will, in his judgment, best promote the purposes of section 319(d)(1)(C) of the Act and the applicable regulations of this part, taking into account with respect to each application:

(i) The degree to which the proposed project satisfactorily provides for the elements set forth in § 56.203;

(ii) The administrative and management capability of the applicant;

(iii) The extent to which community resources will be utilized in the project; and

(iv) The degree to which the applicant intends to integrate services supported by a grant under this part with health services provided under other federally assisted health services or reimbursement programs or projects.

Subpart G—Grants for Technical Assistance

§ 56.701 Applicability.

The regulations of this subpart, in addition to the regulations of subpart A of this part except as otherwise set forth herein, are applicable to grants awarded pursuant to section 319(g) of the Act for the provision of technical and other non-financial assistance to grantees under sections 319(c)(1)(A), 319(d)(1)(A) and 319(d)(1)(B) of the Act.

§ 56.702 Application.

To be approved by the Secretary under this subpart, an application for a grant must meet the requirements of §§ 56.104(a), 56.104(b) (1), (4), (7), (10), and (11), and 56.104(c) of subpart A of this part.

§ 56.703 Project elements.

A project for the provision of technical assistance to migrant health centers and entities which intend to become migrant health centers which is supported under this subpart must:

(a) Provide to such centers and entities as are specified in the grant award, such technical and other nonfinancial assistance (such as fiscal and program management assistance or training of the staff of such center or entity in such management) as may be specified in the grant award. Such technical or other nonfinancial assistance shall be designed to assist such centers and entities in:

(1) Developing plans for becoming migrant centers; and/or

(2) Meeting the requirements of sections 319(f)(2) of the Act.

(b) Provide such assistance through its own staff or resources.

(c) Where the project will provide training to the staff of a center or entity in management or the provision of health services, provide such training consistent, as applicable, with § 56.108(b)(7).

(d) Maintain such records and make such reports on the expenditure of funds under this subpart and provision of such assistance as the Secretary may require.

§ 56.704 Grant evaluation and award.

Within the limits of funds determined by the Secretary to be available for such purpose, the Secretary may award grants under this subpart to applicants therefor which will, in his judgment, best promote the purposes of section 319(g) of the Act and applicable regulations of this part, taking into consideration:

(a) The cost-effectiveness of the application; and

(b) The number of centers and entities to be served by the applicant.

Subpart H—Acquisition and Modernization of Existing Buildings

§ 56.801 Applicability of 42 CFR part 51c, subpart E.

The provisions of 42 CFR part 51c, subpart E, establishing requirements for the acquisition and modernization of existing buildings, shall apply to all grants under section 319 of the Act for project costs which include the cost of acquisition and/or modernization of existing buildings (including the cost of amortizing the principal of, and paying the interest on, loans); except that, for purposes of this subpart, references within subpart E to part 51c, or to subparts of part 51c, shall be deemed to be references to part 56, or to the appropriate subparts of part 56, and references to section 330 of the Act shall be deemed to be references to section 319 of the Act.

[43 FR 5353, Feb. 7, 1978]

PART 57—GRANTS FOR CONSTRUCTION OF TEACHING FACILITIES, EDUCATIONAL IMPROVEMENTS, SCHOLARSHIPS AND STUDENT LOANS

Subparts A–B [Reserved]

Subpart C—Health Professions Student Loans

Sec.
57.201 Applicability.
57.202 Definitions.
57.203 Application by school.
57.204 Payment of Federal capital contributions and reallocation of funds remitted to the Secretary.
57.205 Health professions student loan funds.
57.206 Eligibility and selection of health professions student loan applicants.
57.207 Maximum amount of health professions student loans.
57.208 Health professions student loan promissory note and disclosure requirements.
57.209 Payment of health professions student loans.
57.210 Repayment and collection of health professions student loans.
57.211 Cancellation of health professions student loans for disability or death.
57.212 [Reserved]
57.213 Continuation of provisions for cancellation of loans made prior to November 18, 1971.
57.213a Loan cancellation reimbursement.
57.214 Repayment of loans made after November 17, 1971, for failure to complete a program of study.
57.215 Records, reports, inspection, and audit.
57.216 What additional Department regulations apply to schools?
57.216a Performance standard.
57.217 Additional conditions.
57.218 Noncompliance.

Subpart D—Nursing Student Loans

57.301 Applicability.
57.302 Definitions.
57.303 Application by school.
57.304 Payment of Federal capital contributions and reallocation of funds remitted to the Secretary.
57.305 Nursing student loan funds.
57.306 Eligibility and selection of nursing student loan applicants.
57.307 Maximum amount of nursing student loans.
57.308 Nursing student loan promissory note.
57.309 Payment of nursing student loans.
57.310 Repayment and collection of nursing student loans.
57.311 Cancellation of nursing student loans for disability or death.
57.312 Repayment of loans for service in a shortage area.
57.313 Loan cancellation for full-time employment as a registered nurse.
57.313a Loan cancellation reimbursement.
57.314 Repayment of loans made after November 17, 1971, for failure to complete a program of study.
57.315 Records, reports, inspection, and audit.
57.316 What additional Department regulations apply to schools?
57.316a Performance standard.
57.317 Additional conditions.
57.318 Noncompliance.

Subpart E—Grants for Construction of Nurse Training Facilities

57.409 Good cause for other use of completed facility.

Subparts F–O [Reserved]

Subpart P—Loan Guarantees and Interest Subsidies to Assist in Construction of Teaching Facilities for Health Profession Personnel

57.1501 Applicability.
57.1502 Definitions.
57.1503 Eligibility.

57.1504 Application.
57.1505 Approval of applications.
57.1506 Priority.
57.1507 Limitations applicable to loan guarantee.
57.1508 Amount of interest subsidy payments; limitations.
57.1509 Forms of credit and security instruments.
57.1510 Security for loans.
57.1511 Opinion of legal counsel.
57.1512 Length and maturity of loans.
57.1513 Repayment.
57.1514 Loan guarantee and interest subsidy agreements.
57.1515 Loan closing.
57.1516 Right of recovery-subordination.
57.1517 Waiver of right of recovery.
57.1518 Modification of loans.

Subparts Q–T [Reserved]

Subpart U—Armed Forces Health Professions Scholarship Program

57.2001 Applicability.
57.2002 Definitions.
57.2003 Determinations of increased enrollment solely for the program.

Subpart V [Reserved]

Subpart W—Physician Shortage Area Scholarship Grants

57.2201 Applicability.
57.2202 Definitions.
57.2203 Eligibility.
57.2204 Application.
57.2205 Priority for selection of scholarship recipients.
57.2206 Grant award.
57.2207 Amount of scholarship grant.
57.2208 Payment of scholarship grant.
57.2209 Conditions of scholarship grant.
57.2210 Failure to comply.
57.2211 Waiver or suspension.

Subparts X–FF [Reserved]

Subpart GG—Payment for Tuition and Other Educational Costs

57.3201 To which programs do these regulations apply?
57.3202 How will allowable increases be determined?

Subparts HH–PP [Reserved]

Subparts A–B [Reserved]

Subpart C—Health Professions Student Loans

AUTHORITY: Sec. 215 of the Public Health Service Act, 58 Stat. 690, as amended, 63 Stat. 35 (42 U.S.C. 216); secs. 740–747 of the Public Health Service Act, 77 Stat. 170–173, as amended by 90 Stat. 2266–2268, 91 Stat. 390–391, 95 Stat. 920, 99 Stat. 532–536, and 102 Stat. 3125 (42 U.S.C. 294m-q); renumbered as secs. 721–735, as amended by Pub. L. 102–408, 106 Stat. 2011–2022 (42 U.S.C. 292q—292y).

SOURCE: 44 FR 29055, May 18, 1979, unless otherwise noted.

§ 57.201 Applicability.

The regulations of this subpart apply to the federal capital contributions made by the Secretary to public or other nonprofit health professions schools for the establishment of health professions student loan funds and to loans made to students by schools from these funds.

§ 57.202 Definitions.

As used in this subpart:

Act means the Public Health Service Act, as amended.

Date upon which a student ceases to be a full-time student means the first day of the month which is nearest to the date upon which an individual ceases to be a full-time student as defined in this section.

Default means the failure of a borrower of a loan made under this subpart to make an installment payment when due, or comply with any other term of the promissory note for such loan, except that a loan made under this subpart shall not be considered to be in default if the loan is discharged in bankruptcy, the borrower's repayment schedule has been renegotiated and the borrower is complying with the renegotiated schedule, or the loan is in forbearance.

Federal capital loan means a loan made by the Secretary to a school under section 744(a) of the Act, as in effect prior to October 1, 1977, the proceeds of which are to be returned to the Secretary.

Full-time student means a student who is enrolled in a health professions school and pursuing a course of study

which is a full-time academic workload, as determined by the school, leading to a degree specified in section 722(b) of the Act.

Grace period means the period of 1 year beginning on the date upon which a student ceases to be a full-time student at a school of medicine, osteopathic medicine, dentistry, pharmacy, podiatric medicine, optometry, or veterinary medicine.

Health professions school or *school*, for purposes of this subpart, means a public or private nonprofit school of medicine, school of dentistry, school of osteopathic medicine, school of pharmacy, school of podiatric medicine, school of optometry, or school of veterinary medicine as defined in section 799(1)(A) of the Act.

Health professions student loan means the amount of money advanced to a student by a school from a health professions student loan fund under a properly executed promissory note.

Institutional capital contribution means the money provided by a school, in an amount not less than one-ninth of the federal capital contribution, and deposited in a health professions student loan fund.

National of the United States means: (1) A citizen of the United States, or (2) a person who, though not a citizen of the United States, owes permanent allegiance to the United States, as defined in the Immigration and Nationality Act, at 8 U.S.C. section 1101(a)(22).

School year means the traditional approximately 9-month September to June annual session. For the purpose of computing school year equivalents for students who, during a 12-month period, attend for a longer period than the traditional school year, the school year will be considered to be 9 months in length.

Secretary means the Secretary of Health and Human Services and any other officer or employee of the Department of Health and Human Services to whom the authority involved has been delegated.

State means, in addition to the several States, the District of Columbia, the Commonwealth of Puerto Rico, the Commonwealth of the Northern Mariana Islands, the Virgin Islands, Guam, American Samoa, the Republic of Palau, the Republic of the Marshall Islands, and the Federated States of Micronesia.

[44 FR 29055, May 18, 1979, as amended at 52 FR 20987, June 3, 1987; 53 FR 46549, Nov. 17, 1988; 56 FR 19293, Apr. 26, 1991; 56 FR 25446, June 4, 1991; 61 FR 6123, Feb. 16, 1996]

§ 57.203 Application by school.

(a) Each school seeking a Federal capital contribution must submit an application at the time and in the form and manner that the Secretary may require. The application must be signed by an individual authorized to act for the applicant and to assume on behalf of the applicant the obligations imposed by the statute, the regulations of this subpart, and the terms and conditions of the award.

(b) Each application will be reviewed to determine eligibility and the reasonableness of the amount of Federal support requested. The Secretary may require the applicant to submit additional data for this purpose.

(c) An application will not be approved unless an agreement between the Secretary and the applicant school for a Federal capital contribution under section 721 of the Act is reached.

[44 FR 29055, May 18, 1979, as amended at 49 FR 38112, Sept. 27, 1984; 56 FR 19293, Apr. 26, 1991; 57 FR 45734, Oct. 5, 1992; 61 FR 6123, Feb. 16, 1996]

§ 57.204 Payment of Federal capital contributions and reallocation of funds remitted to the Secretary.

(a) *Annual payment.* The Secretary will make payments to each school with which he or she has entered into an agreement under the Act at a time determined by him or her. If the total of the amounts requested for any fiscal year by all schools for Federal capital contributions exceeds the amount of Federal funds determined by the Secretary at the time of payment to be available for this purpose, the payment to each school will be reduced to whichever is smaller:

(1) The amount requested in the application, or

(2) An amount which bears the same ratio to the total amount of Federal funds determined by the Secretary at the time of payment to be available for

that fiscal year for the Health Professions Student Loan Program as the number of full-time students estimated by the Secretary to be enrolled in that school bears to the estimated total number of full-time students in all participating schools during that year. Amounts remaining after these payments are made will be distributed in accordance with this paragraph among schools whose applications requested more than the amount paid to them, but with whatever adjustments that may be necessary to prevent the total paid to any school from exceeding the total requested by it.

(b) *Method of payment.* The payment of Federal capital contributions to a school will be paid in a manner that avoids unnecessary accumulations of money in any health professions student loan fund.

(c) *Reallocation of funds remitted to the Secretary.* All funds from a student loan fund established under this subpart which are remitted to the Secretary in any fiscal year shall be available for allotment under this subpart, in the same fiscal year and the succeeding fiscal year, to schools which, during the period beginning on July 1, 1972, and ending on September 30, 1985, established student loan funds with Federal capital contributions under this subpart. The Secretary will from time to time set dates by which the schools must file applications to receive a portion of these funds. If the total of the amounts requested for any fiscal year by eligible schools exceeds the amount of funds determined by the Secretary at the time of payment to be available for this purpose, the payment to each school will be reduced to whichever is smaller:

(1) The amount requested in the application, or

(2) An amount which bears the same ratio to the total amount of returned funds determined by the Secretary at the time of payment to be available for that fiscal year for the Health Professions Student Loan program as the number of full-time students estimated by the Secretary to be enrolled in that school bears to the estimated total number of full-time students in all eligible schools during that year. Amounts remaining after these payments are made will be distributed in accordance with this paragraph among schools whose applications requested more than the amount paid to them, with whatever adjustments may be necessary to prevent the total paid to any school from exceeding the total requested by it.

[44 FR 29055, May 18, 1979, as amended at 53 FR 46549, Nov. 17, 1988; 56 FR 19293, Apr. 26, 1991]

§ 57.205 Health professions student loan funds.

(a) *Funds established with Federal capital contributions.* Any fund established by a school with Federal capital contributions will be accounted for separately from other funds, providing a clear audit trail for all transactions. At all times the fund must contain monies representing the institutional capital contribution. The school must at all times maintain all monies relating to the fund in one or more interest-bearing accounts or investment instruments which meet OMB requirements established for Federal monies held by third parties. The school must place all earnings into the fund but may first deduct from total earnings any reasonable and customary charges incurred through the use of an interest-bearing account. An institution shall exercise the level of care required of a fiduciary with regard to these deposits and investments, and shall be responsible for reimbursing the fund for any losses that occur due to the use of investments that are not federally insured.

(1) The Federal capital contribution fund is to be used by the school only for:

(i) Health professions student loans to full-time students;

(ii) Capital distribution as provided in section 728 of the Act or as agreed to by the school and the Secretary; and

(iii) Costs of litigation, costs associated with membership in credit bureaus, and to the extent specifically approved by the Secretary, other collection costs that exceed the usual expenses incurred in the collection of health professions student loans.

(2) A school must review the balance in the fund on at least a semi-annual basis to determine whether the fund

balance compared with projected levels of expenditures and collections exceeds its needs. A school in closing status must review the balance in the fund on a quarterly basis. Monies identified as in excess of the school's needs must be reported, and the Federal share returned to the Federal Government, by the due date of the required report which identifies the excess monies. The school's determination is subject to the review and approval of the Secretary.

(b) *Funds established with Federal capital loans.* (1) Each Federal capital loan is subject to the terms of the promissory note executed by an authorized official on behalf of the borrowing school.

(2) The Federal capital loans must be carried in a special account of the school, to be used by the school only for (i) repayments of principal and interest on Federal capital loans; and (ii) costs of litigation; costs associated with membership in credit bureaus; and, to the extent specifically approved by the Secretary, other collection costs that exceed the usual expenses incurred in the collection of health professions student loans.

(c) Failure to comply with the requirements of this section will subject a school to the noncompliance provisions of § 57.218 and the Department's Claims Collections regulations (45 CFR part 30), as appropriate.

(Approved by the Office of Management and Budget under control number 0915–0047)

[44 FR 29055, May 18, 1979, as amended at 48 FR 25069, June 3, 1983; 56 FR 40725, Aug. 15, 1991; 61 FR 6123, Feb. 16, 1996]

§ 57.206 Eligibility and selection of health professions student loan applicants.

(a) *Determination of eligibility.* (1) Applicants are eligible for consideration for a health professions student loan if they are:

(i) Residents of the United States and either a citizen or national of the United States, an alien lawfully admitted for permanent residence in the United States, a citizen of the Commonwealth of the Northern Mariana Islands, a citizen of the Republic of Palau, a citizen of the Republic of the Marshall Islands, or a citizen of the Federated States of Micronesia;

(ii) Enrolled, or accepted for enrollment in the school as full-time students;

(iii) In need of the amount of the loan to pursue a full-time course of study at the school;

(iv) Of exceptional financial need in the case of students of medicine or osteopathic medicine. A student will be considered to demonstrate exceptional financial need if the school determines that his or her resources, as described in paragraph (b)(1) of this section, do not exceed the lesser of $6,700 or one-half of the costs of attendance at the school. Summer earnings, educational loans, veterans (G.I.) benefits and earnings during the school year will not be considered as resources in determining whether an applicant meets the eligibility criteria for exceptional financial need, but will be considered in determining the amount of funds a student may receive; and

(v) In compliance with the requirement to register for the draft, if required to do so under section 3 of the Military Selective Service Act.

(2) An applicant who has previously attended an institution of higher education must submit a financial aid transcript which includes at least the following data:

(i) Applicant's name and social security number;

(ii) Amounts and sources of loans and grants previously received by the applicant for study at an institution of higher education;

(iii) Whether the applicant is in default on any of these loans, or owes a refund on any grants;

(iv) Certification from each institution previously attended by the applicant that the applicant has received no financial aid, if applicable; and

(v) From each institution previously attended, the signature of an official authorized by the institution to sign such transcripts on behalf of the institution.

(b) *Selection of applicants.* The school will select qualified applicants, including medical (M.D. and D.O.) applicants, and determine the amount of student loans by considering:

(1) The financial resources available to the student by using one of the national need analysis systems or any

other procedure approved by the Secretary of Education in combination with other information which the school has regarding the student's financial status. The school must take into account, regardless of the tax status of the student, the expected contribution from parents, spouse, self or other family members; and

(2) The costs reasonably necessary for the student's attendance at the school, including any special needs and obligations which directly affect the student's ability to attend the school on a full-time basis. The school must document the criteria used for determining these costs.

(c) *Selection of medical (M.D. and D.O.) student applicants.* In addition to the factors in § 57.206(b), the school must select medical (M.D. and D.O.) students graduating after June 30, 1979, based on the order of greatest need, taking into consideration the other resources available to the student through the school. For purposes of establishing priority for selecting medical (M.D. and D.O.) student applicants to receive health professions student loans, summer earnings, educational loans, veterans (G.I.) benefits, and earnings during the school year will be considered as financial resources.

(d) *Verification of loan information.* The school must verify, to the best of its ability, the information provided by the student on the loan application. To comply with this requirement, a school may require that a student provide, for example: Photocopies of the parents', student's, and spouse's Federal income tax forms with original signatures for the most recent tax year (or certification that no Federal income tax return was filed); tax returns that are certified as having been received by the Internal Revenue Service; or other documentation that the school considers necessary to help assure that information on the loan application is correct.

(Approved by the Office of Management and Budget under control number 0915–0047)

[44 FR 32698, June 7, 1979, as amended at 48 FR 25069, June 3, 1983; 49 FR 38112, Sept. 27, 1984; 52 FR 20987, June 3, 1987; 53 FR 46549, Nov. 17, 1988; 56 FR 19293, Apr. 26, 1991; 61 FR 6123, Feb. 16, 1996]

§ 57.207 Maximum amount of health professions student loans.

The total of the health professions student loans made from the fund to any student for a school year may not exceed $2,500 and the cost of tuition. The maximum amount loaned during a 12-month period to any student enrolled in a school which provides a course of study longer than the 9-month school year may be proportionately increased.

§ 57.208 Health professions student loan promissory note and disclosure requirements.

(a) *Promissory note form.* Each health professions student loan must be evidenced by a properly executed promissory note in a form approved by the Secretary. The school must safeguard the promissory note against fire, theft, and tampering.

(1) Each promissory note must state that the loan will bear interest on the unpaid balance computed only for periods during which repayment of the loan is required, at the rate of 5 percent per year.

(2) Each promissory note must contain an acceleration clause provided by the Secretary, which will permit the acceleration of delinquent loans at the school's option.

(3) A copy of each executed note must be supplied by the school to the student borrower.

(b) *Security.* A school must require security or endorsement if the borrower is a minor and if, under the applicable State law, the note signed by him or her would not create a binding obligation. The school may not require security or endorsement in any other circumstances.

(c) *Disclosure requirements.* (1) For any loan made after June 30, 1986, the school shall, at the time the loan is made, provide the following loan information to the student:

(i) The yearly and cumulative maximum amounts that may be borrowed by the student;

(ii) The terms under which repayment of the loan will begin;

(iii) The maximum number of years in which the loan must be repaid;

(iv) The interest rate that will be paid by the borrower and the minimum

amount of the required monthly payment;

(v) The amount of any other fees charged to the borrower by the lender;

(vi) Any options the borrower may have for deferral, cancellation, prepayment, consolidation, or other refinancing of the loan;

(vii) A definition of default on the loan and a specification of the consequences which will result to the borrower if the borrower defaults, including a description of any arrangements which may be made with credit bureau organizations;

(viii) To the extent practicable, the effect of accepting the loan on the eligibility of the borrower for other forms of student assistance; and

(ix) A description of the actions that may be taken by the Federal Government to collect the loan, including a description of the type of information concerning the borrower that the Federal Government may disclose to:

(A) Officers, employees, or agents of the Department of Health and Human Services,

(B) Officers, employees, or agents of schools with which the Secretary has an agreement under this subpart, or

(C) Any other person involved in the collection of a loan under this subpart.

(2) For any loan made after June 30, 1986, the school shall, prior to the borrower's completion or termination of studies at the school, provide the following loan information to the student:

(i) Each amount borrowed by the student under this subpart;

(ii) The total amount borrowed by the student under this subpart; and

(iii) A schedule for the repayment of the amounts borrowed under this subpart, including the number, amount, and frequency of payments to be made.

(3) In addition to the requirements set forth in paragraphs (c)(1) and (c)(2) of this section, the school must comply with the applicable requirements of Truth in Lending Regulation Z (12 CFR part 226).

(Approved by the Office of Management and Budget under control number 0915–0047)

[44 FR 29055, May 18, 1979, as amended at 48 FR 25069, June 3, 1983; 50 FR 34420, Aug. 23, 1985; 52 FR 20987, June 3, 1987; 56 FR 19293, Apr. 26, 1991; 57 FR 45734, Oct. 5, 1992]

§ 57.209 Payment of health professions student loans.

(a) Health professions student loans from any fund may be paid to or on behalf of student borrowers in installments considered appropriate by the school except that a school may not pay to or on behalf of any borrower more during any given installment period (e.g., semester, term, or quarter) than the school determines the student needs for that period.

(b) No payment may be made from a fund to or on behalf of any student borrower if at the time of the payment the borrower is not a full-time student.

§ 57.210 Repayment and collection of health professions student loans.

(a) Each health professions student loan, including accrued interests, will be repayable in equal or graduated periodic installments in amounts calculated on the basis of a 10-year repayment period. Except as otherwise provided in this paragraph, repayment of a loan must begin one year after the student ceases to be a full-time student.

(1) If a borrower reenters the same or another school as a full-time student within the 1-year period, the date upon which interest will accrue and the repayment period will begin will be determined by the date on which the student last ceases to be a full-time student at that school.

(2) The following periods will be excluded from the 10-year repayment period:

(i) All periods for up to a total of 3 years of active duty performed by the borrower as a member of the Army, Navy, Air Force, Marine Corps, Coast Guard, National Oceanic and Atmospheric Administration Corps or the U.S. Public Health Service Corps;

(ii) All periods for up to a total of 3 years of service as a volunteer under the Peace Corps Act;

(iii) All periods of advanced professional training including internships and residencies, except as specified in paragraph (a)(2)(vi) of this section;

(iv) All periods during which the borrower is pursuing a full-time course of study at an eligible health professions school;

(v) A period not in excess of 2 years during which a borrower who is a full-

time student in a health professions school leaves the school, with the intent to return to such school as a full-time student, to engage in a full-time educational activity which is directly related to the health profession for which the individual is preparing. To qualify for such deferment, the full-time educational activity must be one which:

(A) Is part of a joint-degree program or a formal program of joint study in conjunction with the health profession for which the borrower is preparing at the school; or

(B) Is an activity which will enhance the borrower's knowledge and skills in the health profession for which the borrower is preparing at the school, as determined by the school.

The borrower must request such deferment from the school in which he or she is enrolled no later than 60 days prior to leaving such school to engage in the full-time educational activity. The school must then determine, no later than 30 days prior to the borrower's leaving such school, whether the borrower qualifies for such deferment. A borrower who qualifies for this type of deferment receives the grace period upon completion or termination of his or her studies leading to the first professional degree in the health discipline being pursued. If the borrower fails to return to school, the school retroactively must begin the borrower's grace period based on the date the borrower terminated his or her studies at the school, and must begin the repayment period immediately following the end of the grace period; and

(vi) A period not in excess of 2 years during which a borrower who is a graduate of a health professions school participates in:

(A) A fellowship training program which is directly related to the health profession for which the borrower prepared at the school, as determined by the school from which the borrower received his or her loan, and is engaged in by the borrower no later than 12 months after the completion of the borrower's participation in advanced professional training as described in paragraph (a)(2)(iii) of this section, or prior to the completion of such borrower's participation in such training. To qualify for such deferment, the fellowship training program must be one which:

(*1*) Is a full-time activity in research or research training or in health care policy; and

(*2*) Is a formally established fellowship program which was not created for a specific individual; or

(B) A full-time educational activity which is directly related to the health profession for which the borrower prepared at the school, as determined by the school from which the borrower received his or her loan, and is engaged in by the borrower no later than 12 months after the completion of the borrower's participation in advanced professional training as described in paragraph (a)(2)(iii) of this section, or prior to the completion of the borrower's participation in such training. To qualify for such deferment, the full-time educational activity must be one which:

(*1*) Is part of a joint-degree program in conjunction with the health profession for which the borrower prepared at the school; or

(*2*) Is required for licensure, registration, or certification in the health profession for which the borrower received the HPSL loan; or

(*3*) Is a full-time educational program in public health, health administration, or a health care discipline directly related to the health profession for which the borrower received the loan.

(3) To receive a deferment, a borrower must, no later than 30 days prior to the onset of the activity (or no later than 30 days prior to the due date of the first payment if the borrower begins the activity during the grace period), and annually thereafter, provide the lending school with evidence of his or her status in the deferrable activity, and evidence that verifies deferment eligibility of the activity. This evidence must include certification by the Program Director or other authorized official that the borrower's activity meets the deferment requirements. The borrower must also notify the school upon completion or termination of the activity. It is the responsibility of the borrower to provide the lending school

with all required information or other information regarding the requested deferment. The school may deny a request for deferment if it is not filed in accordance with the requirements of this section.

(4) Subject to the provisions of paragraph (b)(3) of this section, a borrower must establish a repayment schedule with the school providing for payments not less often than quarterly. Any borrower whose repayment is delinquent more than 60 days must establish a monthly repayment schedule with the school. However, a borrower may at his or her option and without penalty, prepay all or part of the principal and accrued interest at any time.

(5) A school may grant forbearance whenever extraordinary circumstances such as unemployment, poor health or other personal problems temporarily affect the borrower's ability to make scheduled loan repayments.

(b)(1) Each school at which a fund is established must exercise due diligence in the collection of health professions student loans due the fund. In the exercise of due diligence, a school must follow procedures which are at least as extensive and effective as those used in the collection of other student loan accounts due the school, and must use the steps outlined below in accordance with collection practices which are generally accepted among institutions of higher education:

(i) Conduct and document an entrance interview (individually or in groups) with the borrower prior to disbursing HPSL funds in an academic year. During the entrance interview the school must obtain documentation which indicates that the borrower is aware of the rights and responsibilities associated with HPSL funds and personal information which would assist in locating the borrower if he or she fails to keep the school informed of his or her current address. The requirements of this subparagraph may be met by correspondence, if the school determines that a face-to-face meeting (individually or in groups) is impracticable.

(ii) Conduct and document an exit interview (individually or in groups) with the borrower. During the exit interview, the school must provide each borrower with information necessary to carry out the terms of repayment, remind the borrower of the rights and responsibilities associated with HPSL funds, and update the personal information collected prior to disbursing HPSL funds which would assist in locating the borrower if he or she fails to keep the school informed of his or her current address. If the borrower terminates studies without advance notice, the school must document attempts to inform the borrower of the substance of the exit interview and to secure exit interview information from the borrower by mail.

(iii) Notify the borrower in writing of the impending repayment obligation at least twice during the grace period;

(iv) Notify a borrower who is in deferment status in writing of the impending repayment obligation 1 to 3 months prior to the expiration of the approved period of deferment;

(v) Perform regular billing;

(vi) Follow up past due payments with a series of at least four documented and reasonably spaced attempts to contact the borrower, at least three of which must be in writing at not more than 30-day intervals, prior to the loan becoming 120 days past due, provided that the school has a current address for the borrower;

(vii) Perform address searches when necessary;

(viii) Use collection agents, which may include the use of an internal collection agent;

(ix) Institute legal proceedings against borrowers after all other attempts at collection have failed, unless the school determines, subject to the approval of the Secretary, that such litigation would not be cost-effective; and

(x) Become a member of a credit bureau and notify the credit bureau of accounts past due by more than 120 days.

In place of one or more of the procedures outlined above schools may substitute collection techniques that are equally or more effective, but only after they have demonstrated the effectiveness of the techniques and obtained written approval from the Secretary.

(2) *Late charge.* (i) For any health professions student loan made after June 30, 1969, but prior to October 22,

1985, the school may fix a charge for failure of the borrower to pay all or any part of an installment when it is due and, in the case of a borrower who is entitled to deferment under section 722(c) of the Act for any failure to file timely and satisfactory evidence of the entitlement. The amount of the charge may not exceed $1 for the first month or part of a month by which the installment or evidence is late and $2 for each succeeding month or part of a month. The school may elect to add the amount of this charge to the principal amount of the loan as of the day after the day on which the installment or evidence was due, or to make the amount of the charge payable to the school no later than the due date of the next installment following receipt of the notice of the charge by the borrower.

(ii) For any health professions student loan made on or after October 22, 1985, the school shall assess a charge for failure of the borrower to pay all or any part of an installment when the loan is more than 60 days past due and, in the case of a borrower who is entitled to deferment under section 722(c) of the Act, for any failure to file satisfactory evidence of the entitlement within 60 days of the date payment would otherwise be due. No charge may be made if the loan is less than 61 days past due. The amount of this charge may not exceed an amount equal to 6 percent of the amount due at the time the charge is calculated. The school may elect to add the amount of this charge to the principal amount of the loan as of the day on which the charge is calculated, or to make the amount of the charge payable to the school no later than the due date of the next installment following receipt of the notice of the charge by the borrower.

(3) With respect to any health professions student loan made after June 30, 1969, the school may require the borrower to make payments of at least $15 per month on all outstanding health professions student loans during the repayment period.

(4) A school must, on an annual basis, review and assess the collectibility of any loan more than 3 years past due. If the school determines that the prospects of future collection are promising enough to justify periodic review of the debt, and neither the statute of limitations nor the 10-year repayment period has expired, the school may retain the account for continued collections, provided that it makes an attempt at least semi-annually to collect from the borrower. When the due diligence procedures required by paragraph (b)(1) of this section have been exhausted, the school is responsible for determining the collection methods it will use for the semi-annual collection effort required on these loans. If the school determines that the prospects of future collection are not promising, or when the statute of limitations or the 10-year repayment period has expired, the loan must be considered uncollectible. A school may determine a loan to be uncollectible sooner than 3 years past due when it has evidence that the loan cannot be collected, but in no case should a school consider a loan as uncollectible if it has not been in default for a least 120 days. A school is not subject to the requirements in paragraphs (b)(4) (i) and (iii) of this section for loans that became uncollectible, as determined by the school, before August 1, 1985.

(i) A school must request permission to write off an uncollectible loan within 30 days of the determination that it is uncollectible or reimburse the fund in the full amount of the loan, pursuant to § 57.210(b)(4)(iii). The 30-day period for submitting the loan for write-off review begins on the date that the determination of uncollectibility is made, in accordance with paragraph (b)(4) of this section. In any instance where the Secretary determines that a school has failed to exercise due diligence in the collection of a loan, in accordance with the applicable regulatory requirements, the school will be required to place in the fund the full amount of principal, interest, and penalty charges that remains uncollected on the loan. Reimbursement must be made by the following June 30 or December 31, whichever is sooner, except that in no case will a school be required to reimburse the fund in less than 30 days following the Secretary's disapproval of the request for write-off approval.

(ii) If the Secretary determines that a school has exercised due diligence in the collection of a loan, in accordance with the applicable regulatory requirements, or if the school determines that the loan was uncollectible prior to August 1, 1985, the school will be permitted to reduce its accounts receivable for the HPSL fund by the full amount of principal, interest, and penalty charges that remains uncollected on that loan and will not be required to return the Federal share of the loss to the Secretary.

(iii) If a school does not request permission to write off an uncollectible loan within the required timeframe, it must reimburse the fund for the full amount of principal, interest, and penalty charges that remains uncollected on that loan. This reimbursement must be made by the following June 30 or December 31, whichever is sooner, except that in no case will a school be required to reimburse the fund in less than 30 days following its determination that a loan is uncollectible.

(iv) Failure to comply with the requirement of this section will subject a school to the noncompliance provisions of § 57.218 and the Department's Claims Collection regulations (45 CFR part 30), as appropriate.

(5) *Disclosure of taxpayer identity information.* Upon written request by the Secretary, the Secretary of the Internal Revenue Service (IRS) may disclose the address of any taxpayer who has defaulted on a health professions student loan, for use only by officers, employees, or agents of the Department, to locate the defaulted borrower to collect the loan. Any such mailing address may be disclosed by the Secretary to any school from which the defaulted borrower received a health professions student loan, for use only by officers, employees, or agents of the school whose duties relate to the collection of health professions student loan funds, to locate the defaulted borrower to collect the loan. Any school which requests and obtains this address information must comply with the requirements of the Secretary and the IRS regarding the safeguarding and proper handling of this information.

(Approved by the Office of Management and Budget under control number 0915–0047)

[44 FR 29055, May 18, 1979, as amended at 48 FR 25069, June 3, 1983; 49 FR 38112, Sept. 27, 1984; 50 FR 34420, Aug. 23, 1985; 52 FR 20988, June 3, 1987; 53 FR 6092, Feb. 29, 1988; 56 FR 19293, Apr. 26, 1991; 56 FR 40726, Aug. 15, 1991; 57 FR 45734, Oct. 5, 1992; 61 FR 6123, Feb. 16, 1996]

§ 57.211 Cancellation of health professions students loans for disability or death.

(a) *Permanent and total disability.* The Secretary will cancel a student borrower's indebtedness in accordance with section 722(d) of the Act if the borrower is found to be permanently and totally disabled on recommendation of the school and as supported by whatever medical certification the Secretary may require. A borrower is totally and permanently disabled if he or she is unable to engage in any substantial gainful activity because of a medically determinable impairment, which the Secretary expects to continue for a long time or to result in death.

(b) *Death.* The Secretary will cancel a student borrower's indebtedness in accordance with section 722(d) of the Act upon the death of the borrower. The school to which the borrower was indebted must secure a certification of death or whatever official proof is conclusive under State law.

(Approved by the Office of Management and Budget under control number 0915–0047)

[44 FR 29055, May 18, 1979, as amended at 56 FR 19293, Apr. 26, 1991; 61 FR 6123, Feb. 16, 1996]

§ 57.212 [Reserved]

§ 57.213 Continuation of provisions for cancellation of loans made prior to November 18, 1971.

Individuals who received health professions student loans as students of medicine, osteopathic medicine, dentistry or optometry prior to November 18, 1971, may still receive cancellation of these loans for practicing in a shortage area or for practicing in a rural shortage area characterized by low family income. The regulations set forth in 42 CFR 57.215(b) (1976), as

adopted on February 7, 1974 remain applicable to cancellation on this basis. The provisions can be found at 39 FR 4774 (February 7, 1974) and a copy can be obtained by writing to the Division of Student Assistance, Bureau of Health Professions, Room 8–34, Parklawn Building, 5600 Fishers Lane, Rockville, MD 20857.

[49 FR 38112, Sept. 27, 1984, as amended at 56 FR 19294, Apr. 26, 1991]

§ 57.213a Loan cancellation reimbursement.

(a) For loans made prior to October 22, 1985, in the event that insufficient funds are available to the Secretary in any fiscal year to enable him or her to pay to all schools their proportionate shares of all loans and interest canceled under this subpart for practice in a shortage area, death, or disability:

(1) Each school will be paid an amount bearing the same ratio to the total of the funds available for that purpose as the principal of loans canceled by that school in that fiscal year bears to the total principal of loans canceled by all schools in that year; and

(2) Any additional amounts to which a school is entitled will be paid by the Secretary at the time of distribution of the assets of the school's Fund under section 728 of the Act.

(b) For loans made on or after October 22, 1985, a school may assess the borrower a charge to insure against the loss of the institutional share of a loan canceled due to the borrower's death or permanent and total disability. The school must develop annually a rate which reflects its cancellation experience. This charge shall not exceed .6 percent of the loan amount. Funds collected under this provision must be maintained by the school in an insured, interest-bearing account (with any earned interest credited to this insurance fund), and used only to reimburse the school for the institutional share of any HPSL loan made on or after October 22, 1985, that is canceled due to the borrower's death or permanent and total disability. A school is not required to establish a separate bank account, but is required to maintain separate accountability.

[53 FR 46549, Nov. 17, 1988, as amended at 56 FR 19294, Apr. 26, 1991; 57 FR 45734, Oct. 5, 1992; 61 FR 6123, Feb. 16, 1996]

§ 57.214 Repayment of loans made after November 17, 1971, for failure to complete a program of study.

In the event that the Secretary undertakes to repay educational loans under section 722(k) of the Act, he or she will use the following criteria to make a determination as to each applicant's eligibility:

(a) An applicant will be considered to have failed to complete the course of study leading to the first professional degree for which an eligible education loan was made upon certification by a health professions school that the individual ceased to be enrolled in the school subsequent to November 17, 1971;

(b) An applicant will be considered to be in exceptionally needy circumstances if, upon comparison of the income and other financial resources of the applicant with his or her expenses and financial obligations, the Secretary determines that repayment of the loan would constitute a serious economic burden on the applicant. In making this determination, the Secretary will take into consideration the applicant's net financial assets, his or her potential earning capacity, and the relationship of the income available to the applicant to the low-income levels published annually by the Secretary under paragraph (c) of this section;

(c) An applicant will be considered to be from a low-income family if the applicant comes from a family with an annual income below a level based on low-income thresholds according to family size published by the U.S. Bureau of the Census, adjusted annually for changes in the Consumer Price Index, and adjusted by the Secretary for use in this program, and the family has no substantial net financial assets. Income levels as adjusted will be published annually by the Secretary in the FEDERAL REGISTER.

(d) An applicant will be considered to be from a disadvantaged family if the individual comes from a family in which the annual income minus unusual expenses which contribute to the

economic burdens borne by the family does not exceed the low-income levels published by the Secretary under paragraph (c) of this section and the family has no substantial net financial assets;

(e) An applicant will be considered as not having resumed his or her health professions studies within two years following the date the individual ceased to be a student upon a certification so stating from the applicant; and

(f) An applicant will be considered as not reasonably expected to resume his or her health professions studies within two years following the date upon which he or she terminated these studies, based upon consideration of the reasons for the applicant's failure to complete these studies, taking into account such factors as academic, medical, or financial difficulties.

The Secretary will only repay education loans made subsequent to November 17, 1971.

[44 FR 29055, May 18, 1979, as amended at 61 FR 6123, Feb. 16, 1996; 61 FR 9532, Mar. 8, 1996]

§ 57.215 Records, reports, inspection, and audit.

(a) Each Federal capital contribution and Federal capital loan is subject to the condition that the school must maintain those records and file with the Secretary those reports relating to the operation of its health professions student loan funds as the Secretary may find necessary to carry out the purposes of the Act and these regulations. A school must submit required reports to the Secretary within 45 days of the close of the reporting period.

(1) A school which fails to submit a required report for its Federal capital contribution fund within 45 days of the close of the reporting period:

(i) Shall be prohibited from receiving new Federal capital contributions;

(ii) Must place the revolving fund and all subsequent collections in an insured interest-bearing account; and

(iii) May make no loan disbursements.

The above restrictions apply until the Secretary determines that the school is in compliance with the reporting requirement.

(2) A school that fails to submit a complete report within 6 months of the close of the reporting period will be subject to termination. The Secretary will provide the school with a written notice specifying his or her intention to terminate the school's participation in the program and stating that the school may request, within 30 days of the receipt of this notice, a formal hearing. If the school requests a hearing, it must within 90 days of the receipt of the notice, submit material, factual issues in dispute to demonstrate that there is cause for a hearing. These issues must be both substantive and relevant. The hearing will be held in the Washington, DC metropolitan area. The Secretary will deny a hearing if:

(i) The request for a hearing is untimely (i.e., fails to meet the 30-day requirement);

(ii) The school does not provide a statement of material, factual issues in dispute within the 90-day required period; or

(iii) The statement of factual issues in dispute is frivolous or inconsequential.

In the event that the Secretary denies a hearing, the Secretary will send a written denial to the school setting forth the reasons for denial. If a hearing is denied, or if as a result of the hearing, termination is still determined to be necessary, the school will be terminated from participation in the program and will be required to return the Federal share of the revolving fund to the Department. A school terminated for failure to submit a complete report within 6 months of the close of the reporting period must continue to pursue collections and may reapply for participation in the program once it has submitted the overdue report.

(3) The school must also comply with the requirements of 45 CFR part 74 and section 798(e) of the Act concerning recordkeeping, audit, and inspection.

(b) The following student records must be retained by the school for 5 years after an individual student ceases to be a full-time student:

(1) Approved student applications for health professions student loans;

(2) Documentation of the financial need of applicants; and

(3) Copy of financial aid transcript(s).

(c) The following repayment records for each individual borrower must be retained for at least 5 years from the date of retirement of a loan:

(1) The amount and date of each loan;

(2) The amount and date of each payment or cancellation;

(3) Records of periods of deferment;

(4) Date, nature and result of each contact with the borrower or proper endorser in the collection of an overdue loan;

(5) Copies of all correspondence to or from the borrower and endorser;

(6) Copies of all correspondence with collection agents related to the individual borrower;

(7) Copies of all correspondence with a credit bureau related to an individual borrower; and

(8) Copies of all correspondence relating to uncollectible loans which have been written off by the Federal Government or repaid by the school.

(d) The school must also retain other records as the Secretary may prescribe. In all cases where questions have arisen as a result of a Federal audit, the records must be retained until resolution of all questions.

(e) Institutional officials who have information which indicates the potential or actual commission of fraud or other offenses against the United States, involving these loan funds, should promptly provide this information to the appropriate Regional Office of Inspector General for Investigations.

(Approved by the Office of Management and Budget under control number 0915–0047)

[48 FR 25070, June 3, 1983, as amended at 50 FR 34421, Aug. 23, 1985; 53 FR 46549, Nov. 17, 1988; 56 FR 19294, Apr. 26, 1991; 57 FR 45734, Oct. 5, 1992; 61 FR 6123, Feb. 16, 1996]

§ 57.216 What additional Department regulations apply to schools?

(a) Participating schools are advised that in addition to complying with the terms and conditions of these regulations, several other regulations apply under this subpart. These include, but are not limited to:

45 CFR part 76—Governmentwide Debarment and Suspension (nonprocurement) and Governmentwide Requirements for Drug-Free Workplace (Grants)

45 CFR part 80—Nondiscrimination under programs receiving Federal assistance through the Department of Health and Human Services effectuation of title VI of the Civil Rights Act of 1964

45 CFR part 83—Regulation for the administration and enforcement of sections 794 and 855 of the Public Health Service Act

45 CFR part 84—Nondiscrimination on the basis of handicap in programs and activities receiving or benefiting from Federal financial assistance

45 CFR part 86—Nondiscrimination on the basis of sex in education programs and activities receiving or benefiting from Federal financial assistance

45 CFR part 91—Nondiscrimination on the basis of age in Health and Human Services programs or activities receiving Federal financial assistance

45 CFR part 93—New Restrictions on Lobbying

(b) The recipient may not discriminate on the basis of religion in the admission of individuals to its training programs.

[44 FR 29055, May 18, 1979, as amended at 56 FR 19294, Apr. 26, 1991; 57 FR 45734, Oct. 5, 1992; 61 FR 6123, Feb. 16, 1996]

§ 57.216a Performance standard.

On June 30, 1984, and on each June 30 thereafter, except as provided in paragraph (b) of this section, each school must have a default rate (as calculated under paragraph (a) of this section) of not more than 5 percent.

(a) The default rate for each school shall be the ratio (stated as a percentage) that the defaulted principal amount outstanding of the school bears to the matured loans of the school. For this purpose:

(1) The term *defaulted principal amount outstanding* means the total amount borrowed from the loan fund of a school that has reached the repayment stage (minus any principal amount repaid or canceled) on loans in default for more than 120 days; and

(2) The term *matured loans* means the total principal amount of all loans made by a school under this subpart minus the total principal amount of loans made by the school to students who are:

(i) Enrolled in a full-time course of study at the school; or

(ii) In their grace period.

(b) Any school that has a default rate greater than 5 percent on June 30 of any year will be required to:

(1) Reduce its default rate by 50 percent (or a school with a default rate below 10 percent must reduce its rate to 5 percent) by the close of the following 6-month period; and

(2) By the end of each succeeding 6-month period, reduce its default rate to 50 percent of the required rate for the previous 6-month period, until it reaches 5 percent.

(c) Any school subject to the provisions of paragraph (b) of this section which fails to comply with those requirements will receive no new HPSL funds and will be required to:

(1) Place the revolving fund monies and all subsequent collections into an insured interest-bearing account;

(2) Make no loan disbursements; and

(3) By the end of the succeeding 6-month period, reduce its default rate to 50 percent of the rate it failed to achieve under paragraph (b) of this section, or 5 percent. A school that meets this requirement will be permitted to resume the use of its health professions student loan funds, but must continue to comply with the requirements of paragraph (b)(2) of this section if its default rate is still greater than 5 percent.

(d) Any school subject to the provisions of paragraph (c)(3) of this section which fails to comply with those requirements will be subject to termination. The Secretary will provide the school with a written notice specifying his or her intention to terminate the school's participation in the program and stating that the school may request, within 30 days of the receipt of this notice, a formal hearing. If the school requests a hearing, it must within 90 days of the receipt of the notice, submit material, factual issues in dispute to demonstrate that there is cause for a hearing. These issues must be both substantive and relevant. The hearing will be held in the Washington, DC metropolitan area. The Secretary will deny a hearing if:

(1) The request for a hearing is untimely (i.e., fails to meet the 30-day requirement);

(2) The school does not provide a statement of material, factual issues in dispute within the 90-day required period; or

(3) The statement of factual issues in dispute is frivolous or inconsequential.

In the event that the Secretary denies a hearing, the Secretary will send a written denial to the school setting forth the reasons for denial. If a hearing is denied, or if as a result of the hearing, termination is still determined to be necessary, the school will be terminated from participation in the program and will be required to return the Federal share of the revolving fund to the Department. A school terminated for failure to comply with the provisions of paragraph (c)(3) of this section must continue to pursue collections and may reapply for participation in the program only when it has attained a default rate of 5 percent or less.

(Approved by the Office of Management and Budget under control number 0915–0047)

[50 FR 34423, Aug. 23, 1985, as amended at 52 FR 20988, June 3, 1987; 53 FR 46550, Nov. 17, 1988; 56 FR 19294, Apr. 26, 1991]

§ 57.217 Additional conditions.

The Secretary may with respect to any agreement entered into with any school under § 57.205, impose additional conditions prior to or at the time of any award when in his or her judgment these conditions are necessary to assure or protect the advancement of the purposes of the agreement, the interest of the public health, or the conservation of funds awarded.

§ 57.218 Noncompliance.

Wherever the Secretary finds that a participating school has failed to comply with the applicable provisions of the Act or the regulations of this subpart, he or she may, on reasonable notice to the school, withhold further payment of Federal capital contributions, and take such other action, including the termination of any agreement, as he or she finds necessary to enforce the Act and regulations. In this case no further expenditures shall be made from the health professions student loan fund or funds involved until the Secretary determines that there is no longer any failure of compliance.

Subpart D—Nursing Student Loans

AUTHORITY: Sec. 215 of the Public Health Service Act, 58 Stat. 690, 67 Stat. 631 (42 U.S.C. 216); secs. 835–842 of the Public Health Service Act, 77 Stat. 913–916, as amended by 99 Stat. 397–400, 536–537, and 102 Stat. 3160–3161 (42 U.S.C. 297 a–i).

SOURCE: 50 FR 34434, Aug. 23, 1985, unless otherwise noted.

§ 57.301 Applicability.

The regulations in this subpart apply to the Federal capital contributions made by the Secretary to public or other nonprofit schools of nursing for the establishment of nursing student loan funds and to loans made to students from these funds.

§ 57.302 Definitions.

As used in this subpart:

Academic year means the traditional, approximately 9-month September to June annual session. For the purpose of computing academic year equivalents for students who, during a 12-month period, attend for a longer period than the traditional academic year, the academic year will be considered to be of 9 months' duration.

Act means the Public Health Service Act, as amended.

Community health center means an entity as defined under section 330(a) of the Public Health Service Act, and in regulations at 42 CFR 51c.102(c).

Date upon which a student ceases to be a full-time or half-time student means the first day of the month which is nearest to the date upon which an individual ceases to be a full-time or half-time student, as defined in this section.

Default means the failure of a borrower of a loan made under this subpart to make an installment payment when due, or comply with any other term of the promissory note for such loan, except that a loan made under this subpart shall not be considered to be in default if the loan is discharged in bankruptcy, the borrower's repayment schedule has been renegotiated and the borrower is complying with the renegotiated schedule, or the loan is in forbearance.

Federal capital loan means a loan made by the Secretary to a school under section 827(a) of the Act, as in effect prior to July 29, 1975, the proceeds of which are to be returned to the Secretary.

Full-time student means a student who is enrolled in a school and pursuing a course of study which constitutes a full-time academic workload, as determined by the school, leading to a diploma in nursing, an associate degree in nursing or an equivalent degree, a baccalaureate degree in nursing or an equivalent degree, or a graduate degree in nursing.

Good standing means the eligibility of a student to continue in attendance at the school where he or she is enrolled as a student in accordance with the school's standards and practices.

Grace period means the period of 9 months beginning on the date upon which a student ceases to be a full-time or half-time student at a school of nursing.

Half-time student means a student who is enrolled in a school and pursuing a course of study which constitutes at least one-half of a full-time academic workload but less than a full-time academic workload, as determined by the school, leading to a diploma in nursing, an associate degree in nursing or an equivalent degree, a baccalaureate degree in nursing or an equivalent degree, or a graduate degree in nursing.

Indian Health Service health center means a health care facility (whether operated directly by the Indian Health Service or operated by a tribal contractor or grantee under the Indian Self-Determination Act), which is physically separated from a hospital, and which provides one or more clinical treatment services, such as physician, dentist or nursing services, available at least 40 hours a week for outpatient care to persons of Indian or Alaska Native descent.

Institutional capital contribution means the money provided by a school, in an amount not less than one-ninth of the Federal capital contribution, and deposited in a nursing student loan fund.

Migrant health center means an entity as defined under section 329(a) of the Public Health Service Act, and in regulations at 42 CFR 56.102(g).

National of the United States means: (1) A citizen of the United States, or (2) a person who, though not a citizen of the United States, owes permanent allegiance to the United States, as defined in the Immigration and Nationality Act, at 8 U.S.C. 1101(a)(22).

Native Hawaiian health center means an entity (as defined in section 8 of Public Law 100–579)—

(a) Which is organized under the laws of the State of Hawaii,

(b) Which provides or arranges for health care services through practitioners licensed by the State of Hawaii, where licensure requirements are applicable,

(c) Which is a public or private nonprofit entity, and

(d) In which Native Hawaiian health practitioners significantly participate in the planning, management, monitoring, and evaluation of health services.

Nursing facility means a facility as defined in section 1919(a) of the Social Security Act (SSA) (for fiscal year (FY) 1991 and subsequent fiscal years), except for FYs 1989 and 1990, the term means a ''skilled nursing facility,'' as such term is defined in section 1861(j) of the SSA, and an ''intermediate care facility,'' as such term is defined in section 1905(c) of such Act.

Nursing student loan means the amount of money advanced to a student by a school from a nursing student loan fund under a properly executed promissory note.

Registered nurse means an individual who has been licensed by a State Board of Nursing to practice professional nursing in accordance with State licensing laws requiring as a minimum one of the degrees or diplomas specified in this section.

Rural health clinic means an entity as defined under section 1861(aa)(2) of the Social Security Act, and in regulations at 42 CFR 491.2.

School means a public or other nonprofit school of nursing, as defined in section 853 of the Act.

Secretary means the Secretary of Health and Human Services and any other officer or employee to whom the authority involved has been delegated.

State means, in addition to the several States, the District of Columbia, the Commonwealth of Puerto Rico, the Commonwealth of the Northern Mariana Islands, the Virgin Islands, Guam, American Samoa, the Republic of Palau, the Republic of the Marshall Islands, and the Federated States of Micronesia.

[50 FR 34434, Aug. 23, 1985, as amended at 52 FR 10195, Mar. 30, 1987; 53 FR 46554, Nov. 17, 1988; 56 FR 13771, Apr. 4, 1991; 61 FR 6123, Feb. 16, 1996]

§ 57.303 Application by school.

(a) Each school seeking a Federal capital contribution must submit an application at the time and in the form and manner that the Secretary may require. The application must be signed by an individual authorized to act for the applicant and to assume on behalf of the applicant the obligations imposed by the statute, the regulations of this subpart, and the terms and conditions of the award.

(b) Each application will be reviewed to determine eligibility and the reasonableness of the amount of Federal support requested. The Secretary may require the applicant to submit additional data for this purpose.

(c) An application will not be approved unless an agreement between the Secretary and the applicant school for a Federal capital contribution under section 835 of the Act is reached.

[50 FR 34434, Aug. 23, 1985, as amended at 56 FR 13771, Apr. 4, 1991; 57 FR 45735, Oct. 5, 1992]

§ 57.304 Payment of Federal capital contributions and reallocation of funds remitted to the Secretary.

(a) *Annual payment.* The Secretary will make payments at a time determined by him or her, to each school with which he or she has entered into an agreement under the Act.

(1) For any fiscal year for which ''set-aside'' funds are available, the Secretary will first make payments in the manner described in (a)(2) of this section of not less than $1,000,000 of the amount of Federal funds determined by the Secretary at the time of payment to be available for making loans under this subpart. These funds will be paid to schools submitting an application for ''set-aside'' funds to be used only

for the purpose of making loans to individuals qualified to receive loans under this subpart who, on the date they receive the loan, have not been employed on a full-time basis or been enrolled in any educational institution on a full-time basis for at least 7 years. An individual may not receive a loan under this subparagraph that exceeds $500 for any academic year.

(2) If the total of the amounts requested for any fiscal year by all schools for Federal capital contributions minus the amount received under paragraph (a)(1) of this section exceeds the amount of Federal funds determined by the Secretary at the time of payment to be available for this purpose, the payment to each school will be reduced to whichever is smaller: (i) The amount requested in the application, or (ii) an amount which bears the same ratio to the total amount of Federal funds determined by the Secretary at the time of payment to be available for that fiscal year for the Nursing Student Loan program as the number of full-time students estimated by the Secretary to be enrolled in that school bears to the estimated total number of full-time students in all participating schools during that year.

(3) Amounts remaining after these payments are made will be distributed in accordance with this paragraph among schools whose applications requested more than the amount paid to them, but with whatever adjustments that may be necessary to prevent the total paid to any school from exceeding the total requested by it.

(b) *Method of payment*. The payment of Federal capital contributions to a school will be paid in a manner that avoids unnecessary accumulations of money in any nursing student loan fund.

(c) *Reallocation of funds remitted to the Secretary*. (1) All funds from a student loan fund established under this subpart which are remitted to the Secretary in any fiscal year shall be available for allotment under this subpart, in the same fiscal year and the succeeding fiscal year, to eligible nursing schools. In making these allotments, the Secretary shall give priority to nursing schools which established a student loan fund under this subpart after September 30, 1975. The Secretary will make payments to eligible schools at a time determined by him or her, according to the procedures indicated in paragraphs (c)(2) and (c)(3) of this section.

(2) *Eligible schools which established a nursing student loan fund after September 30, 1975*. The Secretary will make awards first to those eligible schools that established a nursing student loan fund after September 30, 1975. If the total of the amounts requested for any fiscal year by these schools exceeds the amount of funds determined by the Secretary at the time of payment to be available for this purpose, the payment to each school will be reduced to whichever is smaller:

(i) The amount requested in the application, or

(ii) An amount which bears the same ratio to the total amount of returned funds determined by the Secretary at the time of payment to be available for that fiscal year for the Nursing Student Loan program as the number of full-time students estimated by the Secretary to be enrolled in that school bears to the estimated total number of full-time students in these eligible schools during that year.

Amounts remaining after these payments are made will be distributed in accordance with this paragraph among schools whose applications requested more than the amount paid to them, with whatever adjustments may be necessary to prevent the total paid to any school from exceeding the total requested by it.

(3) *Eligible schools which established a nursing student loan fund prior to October 1, 1975*. If there are funds remaining after making awards as specified by paragraph (c)(2) of this section, the Secretary will make awards to eligible schools which established a nursing student loan fund prior to October 1, 1975. If the total of the amounts requested for any fiscal year by these schools exceeds the amount of funds determined by the Secretary at the time of payment to be available for this purpose, the payment to each school will be reduced to whichever is smaller:

(i) The amount requested in the application, or

(ii) An amount which bears the same ratio to the total amount of returned funds determined by the Secretary at the time of payment to be available for that fiscal year for the Nursing Student Loan program as the number of full-time students estimated by the Secretary to be enrolled in that school bears to the estimated total number of full-time students in these eligible schools during that year.

Amounts remaining after these payments are made will be distributed in accordance with this paragraph among schools whose applications requested more than the amount paid to them, with whatever adjustments may be necessary to prevent the total paid to any school from exceeding the total requested by it.

[50 FR 34434, Aug. 13, 1985, as amended at 53 FR 46554, Nov. 17, 1988]

§ 57.305 Nursing student loan funds.

(a) *Funds established with Federal capital contributions.* Any fund established by a school with Federal capital contributions will be accounted for separately from other funds, providing a clear audit trail for all transactions. At all times the fund must contain monies representing the institutional capital contribution. The school must at all times maintain all monies relating to the fund in one or more interest-bearing accounts or investment instruments which meet OMB requirements established for Federal monies held by third parties, except that if the school documents that the costs associated with the use of an interest-bearing account would exceed expected earnings, the school is not required to maintain these monies in an interest-bearing account. The school must place all earnings into the fund but may first deduct from total earnings any reasonable and customary charges incurred through the use of an interest-bearing account. An institution shall exercise the level of care required of a fiduciary with regard to these deposits and investments, and shall be responsible for reimbursing the fund for any losses that occur due to the use of investments that are not federally insured.

(1) The Federal capital contribution fund is to be used by the school only for:

(i) Nursing student loans to full-time or half-time students;

(ii) Capital distribution as provided in section 839 of the Act or as agreed to by the school and the Secretary; and

(iii) Costs of litigation, costs associated with membership in credit bureaus, and to the extent specifically approved by the Secretary, other collection costs that exceed the usual expenses incurred in the collection of nursing student loans.

(2) A school must review the balance in the fund on at least a semi-annual basis to determine whether the fund balance compared with projected levels of expenditures and collections exceeds its needs. A school in closing status must review the balance in the fund on a quarterly basis. Monies identified as in excess of the school's needs must be reported, and the Federal share returned to the Federal Government, by the due date of the required report which identifies the excess monies. The school's determination is subject to the review and approval of the Secretary.

(b) *Funds established with Federal capital loans.* (1) Each Federal capital loan is subject to the terms of the promissory note executed by an authorized official on behalf of the borrowing school.

(2) The Federal capital loans must be carried in a special account of the school, to be used by the school only for: (i) Repayments of principal and interest on Federal capital loans; and (ii) costs of litigation, costs associated with membership in credit bureaus, and, to the extent specifically approved by the Secretary, other collection costs that exceed the usual expenses incurred in the collection of nursing student loans.

(c) Failure to comply with the requirements of this section will subject a school to the noncompliance provisions of § 57.318 and the Department's Claims Collections regulations (45 CFR part 30), as appropriate.

(Approved by the Office of Management and Budget under control number 0915–0047)

[50 FR 34434, Aug. 23, 1985, as amended at 56 FR 40734, Aug. 15, 1991; 61 FR 6123, Feb. 16, 1996]

§ 57.306 Eligibility and selection of nursing student loan applicants.

(a) *Determination of eligibility.* (1) Applicants are eligible for consideration for a nursing student loan if they are:

(i) Residents of the United States and either a citizen or national of the United States, an alien lawfully admitted for permanent residence in the United States, a citizen of the Commonwealth of the Northern Mariana Islands, a citizen of the Republic of Palau, a citizen of the Republic of the Marshall Islands, or a citizen of the Federated States of Micronesia;

(ii) Enrolled, or accepted for enrollment in the school as full-time or half-time students;

(iii) In need of the amount of the loan to pursue the course of study at the school; and

(iv) Capable, in the opinion of the school, of maintaining good standing in the course of study.

(2) An applicant who has previously attended an institution of higher education must submit a financial aid transcript which includes at least the following data:

(i) Applicant's name and social security number;

(ii) Amounts and sources of loans and grants previously received by the applicant for study at an institution of higher education;

(iii) Whether the applicant is in default on any of these loans, or owes a refund on any grants;

(iv) Certification from each institution previously attended by the applicant that the applicant has received no financial aid, if applicable; and

(v) From each institution previously attended, the signature of an official authorized by the institution to sign such transcripts on behalf of the institution.

(b) *Selection of nursing student loan applicants and determinations of need.* The school will select qualified applicants, make reasonable determinations of need, and determine the amount of student loans.

(1) In selecting nursing student loan applicants the school will give preference to licensed practical nurses, and to persons with exceptional financial need. For purposes of this preference, a student will be considered to demonstrate exceptional financial need if the school determines that the student's resources, as described in paragraph (b)(2)(i) of this section, do not exceed one-half of the costs of attendance at the school. Summer earnings, educational loans, veterans (G.I.) benefits, earnings during the school year, and Aid to Families with Dependent Children (AFDC) will not be considered as resources in determining whether an applicant meets these criteria for exceptional financial need, but will be considered in determining the amount of funds a student may receive.

(2) In determining whether a student is in need of a nursing student loan to pursue a full-time or half-time course of study at the school, the school will take into consideration:

(i) The financial resources available to the student by using one of the national need analysis systems or any other procedure approved by the Secretary of Education in combination with other information which the school has regarding the student's financial status; and

(ii) The costs reasonably necessary for the student's attendance at the school, including any special needs and obligations which directly affect the student's financial ability to attend the school on a full-time or half-time basis. The school must document the criteria used for determining these costs.

(c) *Verification of loan information.* The school must verify, to the best of its ability, the information provided by the student on the loan application. To comply with this requirement, a school may require that a student provide, for example: Photocopies of the parents', student's, and spouse's Federal income tax forms with original signatures for the most recent tax year (or certification that no Federal income tax return was filed); tax returns that are certified as having been received by the Internal Revenue Service; or other documentation that the school considers necessary to help assure that information on the loan application is correct.

(Approved by the Office of Management and Budget under control number 0915–0047)

[50 FR 34434, Aug. 23, 1985, as amended at 53 FR 46554, Nov. 17, 1988; 56 FR 13771, Apr. 4, 1991; 61 FR 6123, Feb. 16, 1996]

§ 57.307 Maximum amount of nursing student loans.

The total of the nursing student loans made from the fund to any student for an academic year may not exceed $2,500, except that for each of the final 2 academic years of the program, the total must not exceed $4,000. The maximum amount loaned during a 12-month period to any student enrolled in a school which provides a course of study longer than the 9-month academic year may be proportionately increased. The total of all nursing student loans to any student must not exceed $13,000.

[56 FR 13771, Apr. 4, 1991]

§ 57.308 Nursing student loan promissory note.

(a) *Promissory note form.* Each nursing student loan must be evidenced by a properly executed promissory note in a form approved by the Secretary. The school must safeguard the promissory note against fire, theft, and tampering.

(1) Each promissory note must state that the loan will bear interest on the unpaid balance computed only for periods during which repayment of the loan is required, at the rate of 5 percent per year.

(2) Each promissory note must contain an acceleration clause provided by the Secretary, which will permit the acceleration of delinquent loans at the school's option.

(3) A copy of each executed note must be supplied by the school to the student borrower.

(b) *Security.* A school must require security or endorsement if the borrower is a minor and if, under the applicable State law, the note signed by him or her would not create a binding obligation. The school may not require security or endorsement in any other circumstances.

(Approved by the Office of Management and Budget under control number 0915–0047)

[50 FR 34434, Aug. 23, 1985, as amended at 56 FR 13771, Apr. 4, 1991; 57 FR 45735, Oct. 5, 1992]

§ 57.309 Payment of nursing student loans.

(a) Nursing student loans from any fund may be paid to or on behalf of student borrowers in installments considered appropriate by the school except that a school may not pay to or on behalf of any borrower more during any given installment period (e.g., semester, term, or quarter) than the school determines the student needs for that period.

(b) No payment may be made from a fund to or on behalf of any student borrower if at the time of the payment the borrower is not a full-time or half-time student.

§ 57.310 Repayment and collection of nursing student loans.

(a) Each nursing student loan, including accrued interest, will be repayable in equal or graduated periodic installments in amounts calculated on the basis of a 10-year repayment period. Repayment of a loan must begin 9 months after the student ceases to be a full-time or half-time student, except that if a borrower reenters the same or another school as a full-time or half-time student within the 9-month period, the date upon which interest will accrue and the repayment period will begin will be determined by the date upon which the student last ceases to be a full-time or half-time student at that school.

(1) The following periods will be excluded from the 10-year repayment period: (i) All periods up to a total of 3 years of active duty performed by the borrower as a member of the Army, Navy, Air Force, Marine Corps, Coast Guard, National Oceanic and Atmospheric Administration Corps or the U.S. Public Health Service Commissioned Corps;

(ii) All periods up to a total of 3 years of service as a volunteer under the Peace Corps Act; and

(iii) All periods up to a total of 10 years during which the borrower is pursuing a full-time or half-time course of study at a school leading to a baccalaureate degree in nursing or an equivalent degree, or to a graduate degree in nursing, or is otherwise pursuing advanced professional training in nursing (or training to be a nurse anesthetist). For purposes of this paragraph, ''otherwise pursuing advanced professional training in nursing'' shall include full-time or half-time training, beyond the

first diploma or degree in nursing received by the particular borrower, of at least 1 academic year which will advance the borrower's knowledge of and strengthen his or her skills in the provision of nursing services.[1]

(2) Subject to the provisions of paragraph (b)(3) of this section, a borrower must establish a repayment schedule with the school providing for payments not less often than quarterly. Any borrower whose repayment becomes more than 60 days past due must be placed on a monthly repayment schedule by the school. A borrower may at his or her option and without penalty, prepay all or part of the principal and accrued interest at any time.

(3) A school may grant forbearance whenever extraordinary circumstances such as unemployment, poor health or other personal problems temporarily affect the borrower's ability to make scheduled loan repayments.

(b) *Collection of nursing student loans.* (1) Each school at which a fund is established must exercise due diligence in the collection of nursing student loans due the fund. In the exercise of due diligence, a school must follow procedures which are at least as extensive and effective as those used in the collection of other student loan accounts due the school, and must use the steps outlined below in accordance with collection practices which are generally accepted among institutions of higher education:

(i) Conduct and document an entrance interview (individually or in groups) with the borrower prior to disbursing NSL funds in any academic year. During the entrance interview the school must obtain documentation which indicates that the borrower is aware of the rights and responsibilities associated with NSL funds and personal information which would assist in locating the borrower if he or she fails to keep the school informed of his or her current address. The requirement of this subparagraph may be met by correspondence if the school determines that a face-to-face meeting (individually or in groups) is impracticable.

(ii) Conduct and document an exit interview (individually or in groups) with the borrower. During the exit interview, the school must provide each borrower with information necessary to carry out the terms of repayment, remind the borrower of the rights and responsibilities associated with NSL funds, and update the personal information collected prior to disbursing NSL funds which would assist in locating the borrower if he or she fails to keep the school informed of his or her current address. If the borrower terminates studies without advance notice, the school must document attempts to inform the borrower of the substance of the exit interview and to secure exit interview information from the borrower by mail.

(iii) Notify the borrower in writing of the impending repayment obligation at least twice during the grace period;

(iv) Notify a borrower who is in deferment status in writing of the impending repayment obligation 1 to 3 months prior to the expiration of the approved period of deferment;

(v) Perform regular billing;

(vi) Follow up past due payments with a series of at least four documented and reasonably spaced attempts to contact the borrower, at least three of which must be in writing at not more than 30-day intervals, prior to the loan becoming 120 days past due, provided that the school has a current address for the borrower;

(vii) Perform address searches when necessary;

(viii) Use collection agents, which may include the use of an internal collection agent;

(ix) Institute legal proceedings against borrowers after all other attempts at collection have failed, unless the school determines, subject to the approval of the Secretary, that such litigation would not be cost-effective; and

[1] Individuals who received nursing student loans prior to July 1, 1969, remain subject to the repayment provisions of 42 CFR 57.314(a)(3)(1976) as adopted on February 4, 1974. These provisions can be found at 39 FR 16473 (May 9, 1974), and a copy can be obtained by writing the Division of Student Assistance, Bureau of Health Professions, 5600 Fishers Lane, Parklawn Building, room 8–34, Rockville, MD 20857.

(x) Become a member of a credit bureau and notify the credit bureau of accounts past due by more than 120 days.

In place of one or more of the procedures outlined above schools may substitute collection techniques that are equally or more effective, but only after they have demonstrated the effectiveness of the techniques and obtained written approval from the Secretary.

(2) *Late charge.* (i) For any nursing student loan made after June 30, 1969, but prior to October 1, 1985, the school may fix a charge for failure of the borrower to pay all or any part of an installment when it is due and, in the case of a borrower who is entitled to deferment under section 836(b)(2) of the Act, or cancellation or repayment under section 836(b)(3) of the Act, for any failure to file timely and satisfactory evidence of the entitlement. The amount of the charge may not exceed $1 for the first month or part of a month by which the installment or evidence is late and $2 for each succeeding month or part of a month. The school may elect to add the amount of this charge to the principal amount of the loan as of the day after the day on which the installment or evidence was due, or to make the amount of the charge payable to the school no later than the due date of the next installment following receipt of the notice of the charge by the borrower.

(ii) For any nursing student loan made on or after October 1, 1985, the school shall assess a charge for failure of the borrower to pay all or any part of an installment when the loan is more than 60 days past due and, in the case of a borrower who is entitled to deferment under section 836(b)(2) of the Act, for any failure to file satisfactory evidence of the entitlement within 60 days of the date payment would otherwise be due. No charge may be made if the loan is less than 61 days past due. The amount of this charge may not exceed an amount equal to 6 percent of the amount due at the time the charge is calculated. The school may elect to add the amount of this charge to the principal amount of the loan as of the day on which the charge is calculated, or to make the amount of the charge payable to the school no later than the due date of the next installment following receipt of the notice of the charge by the borrower.

(3) With respect to any nursing student loan made after June 30, 1969, the school may require the borrower to make payments of at least $15 per month on all outstanding nursing student loans during the repayment period.

(4) A school must, on an annual basis, review and assess the collectibility of any loan more than 3 years past due. If the school determines that the prospects of future collection are promising enough to justify periodic review of the debt, and neither the statute of limitations nor the 10-year repayment period has expired, the school may retain the account for continued collections, provided that it makes an attempt at least semi-annually to collect from the borrower. When the due diligence procedures required by paragraph (b)(1) of this section have been exhausted, the school is responsible for determining the collection methods it will use for the semi-annual collection effort required on these loans. If the school determines that the prospects of future collection are not promising, or when the statute of limitations or the 10-year repayment period has expired, the loan must be considered uncollectible. A school may determine a loan to be uncollectible sooner than 3 years past due when it has evidence that the loan cannot be collected, but in no case should a school consider a loan as uncollectible if it has not been in default for at least 120 days. A school is not subject to the requirements in paragraphs (b)(4) (i) and (iii) of this section for loans that became uncollectible, as determined by the school, before January 1, 1983.

(i) A school must request permission to write off an uncollectible loan within 30 days of the determination that it is uncollectible or reimburse the fund in the full amount of the loan, pursuant to § 57.310(b)(4)(iii). The 30-day period for submitting the loan for write-off review begins on the date that the determination of uncollectibility is made, in accordance with paragraph (b)(4) of this section. In any instance where the Secretary determines that a

school has failed to exercise due diligence in the collection of a loan, in accordance with the applicable regulatory requirements, the school will be required to place in the fund the full amount of principal, interest, and penalty charges that remains uncollected on the loan. Reimbursement must be made by the following June 30 or December 31, whichever is sooner, except that in no case will a school be required to reimburse the fund in less than 30 days following the Secretary's disapproval of the request for write-off approval.

(ii) If the Secretary determines that a school has exercised due diligence in the collection of a loan, in accordance with the applicable regulatory requirements, or if the school determines that the loan was uncollectible prior to January 1, 1983, the school will be permitted to reduce its accounts receivable for the NSL fund by the full amount of principal, interest, and penalty charges that remains uncollected on that loan and will not be required to return the Federal share of the loss to the Secretary.

(iii) If a school does not request permission to write off an uncollectible loan within the required timeframe, it must reimburse the fund for the full amount of principal, interest, and penalty charges that remains uncollected on that loan. This reimbursement must be made by the following June 30 or December 31, whichever is sooner, except that in no case will a school be required to reimburse the fund in less than 30 days following its determination that a loan is uncollectible.

(iv) Failure to comply with the requirements of this section will subject a school to the noncompliance provisions of § 57.318 and the Department's Claims Collection regulations (45 CFR part 30), as appropriate.

(5) *Disclosure of taxpayer identity information.* Upon written request by the Secretary, the Secretary of the Internal Revenue Service (IRS) may disclose the address of any taxpayer who has defaulted on a nursing student loan, for use only by officers, employees, or agents of the Department, to locate the defaulted borrower to collect the loan. Any such mailing address may be disclosed by the Secretary to any school from which the defaulted borrower received a nursing student loan, for use only by officers, employees, or agents of the school whose duties relate to the collection of nursing student loan funds, to locate the defaulted borrower to collect the loan. Any school which requests and obtains such address information must comply with the requirements of the Secretary and the IRS regarding the safeguarding and proper handling of this information.

(Approved by the Office of Management and Budget under control number 0915–0047)

[50 FR 34434, Aug. 23, 1985, as amended at 52 FR 10195, Mar. 30, 1987; 56 FR 13771, Apr. 4, 1991; 56 FR 40734, Aug. 15, 1991; 57 FR 45735, Oct. 5, 1992; 61 FR 6123, Feb. 16, 1996]

§ 57.311 Cancellation of nursing student loans for disability or death.

(a) *Permanent and total disability.* The Secretary will cancel a borrower's indebtedness in accordance with section 836(b)(4) of the Act if the borrower is found to be permanently and totally disabled on recommendation of the school and as supported by whatever medical certification the Secretary may require. A borrower is totally and permanently disabled if he or she is unable to engage in any substantial gainful activity because of a medically determinable impairment, which the Secretary expects to continue for a long time or to result in death.

(b) *Death.* The Secretary will cancel a borrower's indebtedness in accordance with section 836(b)(4) of the Act upon the death of the borrower. The school to which the borrower was indebted must secure a certification of death or whatever official proof is conclusive under State law.

(Approved by the Office of Management and Budget under control number 0915–0047)

[50 FR 34434, Aug. 23, 1985, as amended at 56 FR 13772, Apr. 4, 1991]

§ 57.312 Repayment of loans for service in a shortage area.

(a) *Service in a shortage area.* Subject to the availability of funds, a person who:

(1) Has obtained a degree as specified in section 846(a)(1) of the Act;

(2) Has obtained one or more nursing student loans or any other loans necessary for costs (including tuition, books, fees, equipment, living and other expenses which the Secretary determines were necessary) of attending a school of nursing; and

(3) Enters into an agreement with the Secretary to serve as a full-time registered nurse for a period of not less than 2 years in an Indian Health Service health center, a Native Hawaiian health center, a public hospital, a migrant health center, a community health center, a nursing facility, a rural health clinic, or in a health facility determined by the Secretary to have a critical shortage of nurses, will have a portion of these loans repaid by the Secretary in accordance with paragraph (c) of this section. Prior to entering an agreement for repayment of loans, other than nursing student loans, the Secretary will require that satisfactory evidence be provided of the existence and reasonableness of the education loans (*i.e.*, a copy of the written loan agreement establishing the loan).

(b) When entering into agreements under paragraph (a) of this section, the Secretary shall give priority to:

(1) Applicants with the greatest financial need; and

(2) Applicants that, with respect to health facilities described in paragraph (a)(3) of this section, agree to serve in such facilities located in geographic areas with a shortage of and need for nurses, as determined by the Secretary.

(3) In addition to the priorities under paragraphs (b) (1) and (2) of this section, should specific needs warrant, the Secretary may establish additional preferences which will be announced from time to time in the FEDERAL REGISTER.

(c) *Repayment.* Loan repayment will be made by the Secretary to persons who meet the conditions set forth in paragraph (a) of this section. Payment will be as follows:

(1) Upon completion by the borrower of the first year of service as specified in the agreement, the Secretary will pay 30 percent of the principal of, and the interest on, each loan which was unpaid as of the date the borrower began his or her service;

(2) Upon completion by the borrower of the second year of service, the Secretary will pay another 30 percent of the principal of, and the interest on, each loan which was unpaid as of the date the borrower began his or her service;

(3) Upon completion by the borrower of a third year of service, the Secretary will pay another 25 percent of the principal of, and the interest on, each loan which was unpaid as of the date the borrower began his or her service; and

(4) No more than 85 percent of the principal of any loan will be paid under this section.

(Approved by the Office of Management and Budget under control number 0915–0047)

[50 FR 34434, Aug. 23, 1985, as amended at 56 FR 13772, Apr. 4, 1991; 61 FR 6123, Feb. 16, 1996]

§ 57.313 Loan cancellation for full-time employment as a registered nurse.

(a) *For loans made after November 18, 1971, and before September 29, 1979.* A person who: (1) Received one or more nursing student loans after November 18, 1971, and before September 29, 1979; (2) is in compliance with the requirements of title VIII of the Act and these regulations; and (3) engages in full-time employment as a registered nurse (including teaching in any of the fields of nurse training or service as an administrator, supervisor, or consultant in any of the fields of nursing) in any public or nonprofit private agency, institution, or organization (including neighborhood health centers) is entitled to have a portion of these nursing student loans canceled as follows: 15 percent of the total amount of the loans plus accrued interest on the loan which is unpaid on the first day of his or her service, for each of the first, second, and third year of service; and 20 percent of the total amount of the loan plus accrued interest on the loan for each complete fourth and fifth year of service thereafter, up to 85 percent of the total of the loans, plus accrued interest.

(b) *Continuation of provisions for cancellation of loans made prior to November 18, 1971.* A person who received one or more nursing student loans prior to

November 18, 1971, may still receive cancellation of these loans for service under section 836(h) of the Act. The regulations set forth in 42 CFR 57.316 (a) and (b)(6) (1976), as adopted on February 4, 1974, remain applicable to cancellation on this basis. The provisions can be found at 39 FR 16473 (May 9, 1974) and a copy can be obtained by writing to the Division of Student Assistance, Bureau of Health Professions, Room 8–34, Parklawn Building, 5600 Fishers Lane, Rockville, MD 20857.

(c) The determination of whether a person is entitled to have any portion of his or her nursing student loan canceled for full-time employment as a registered nurse will be made by the institution to whose fund his or her loan is payable, upon receipt and evaluation of an application for cancellation from that person.

[50 FR 34434, Aug. 23, 1985, as amended at 56 FR 13772, Apr. 4, 1991; 57 FR 45735, Oct. 5, 1992; 61 FR 6123, Feb. 16, 1996]

§ 57.313a Loan cancellation reimbursement.

In the event that insufficient funds are available to the Secretary in any fiscal year to enable him or her to pay to all schools their proportionate shares of all loans and interest canceled under this subpart for full-time employment as a nurse, death, or disability:

(a) Each school will be paid an amount bearing the same ratio to the total of the funds available for that purpose as the principal of loans canceled by that school in that fiscal year bears to the total principal of loans canceled by all schools in that year; and

(b) Any additional amounts to which a school is entitled will be paid by the Secretary at the time of distribution of the assets of the school's fund under section 839 of the Act.

§ 57.314 Repayment of loans made after November 17, 1971, for failure to complete a program of study.[2]

In the event that the Secretary undertakes to repay educational loans under section 836(i) of the Act, he or she will use the following criteria to make a determination as to each applicant's eligibility:

(a) An applicant will be considered to have failed to complete the course of study in nursing for which an eligible education loan was made upon certification by a school of nursing that the individual ceased to be enrolled in the school subsequent to November 17, 1971;

(b) An applicant will be considered to be in exceptionally needy circumstances if, upon comparison of the income and other financial resources of the applicant with his or her expenses and financial obligations, the Secretary determines that repayment of the loan would constitute a serious economic burden on the applicant. In making this determination, the Secretary will take into consideration the applicant's net financial assets, his or her potential earning capacity, and the relationship of the income available to the applicant to the low-income levels published annually by the Secretary in the FEDERAL REGISTER;

(c) An applicant will be considered as not having resumed his or her nursing studies within 2 years following the date the individual ceased to be a student upon certification so stating from the applicant; and

(d) An applicant will be considered as not reasonably expected to resume his or her nursing studies within 2 years following the date upon which he or she terminated these studies, based upon consideration of the reasons for the applicant's failure to complete these studies, taking into account such factors as academic, medical, or financial difficulties. The Secretary will only repay education loans made after November 17, 1971.

[50 FR 34434, Aug. 23, 1985, as amended at 56 FR 13772, Apr. 4, 1991; 57 FR 45735, Oct. 5, 1992; 61 FR 6123, Feb. 16, 1996]

§ 57.315 Records, reports, inspection, and audit.

(a) *Records and reports.* (1) Each Federal capital contribution and Federal capital loan is subject to the condition that the school must maintain those

[2] Effective November 26, 1984, the Secretary stopped accepting applications under § 57.314 because Federal funds are not available for this provision.

records and file with the Secretary those reports relating to the operation of its nursing student loan funds as the Secretary may find necessary to carry out the purposes of the Act and these regulations. A school must submit required reports to the Secretary within 45 days of the close of the reporting period.

(i) A school which fails to submit a required report for its Federal capital contribution fund within 45 days of the close of the reporting period:

(A) Shall be prohibited from receiving new Federal capital contributions;

(B) Must place the revolving fund and all subsequent collections in an insured interest-bearing account; and

(C) May make no loan disbursements.

The above restrictions apply until the Secretary determines that the school is in compliance with the reporting requirement.

(ii) A school that fails to submit a complete report within 6 months of the close of the reporting period will be subject to termination. The Secretary will provide the school with a written notice specifying his or her intention to terminate the school's participation in the program and stating that the school may request, within 30 days of the receipt of this notice, a formal hearing. If the school requests a hearing, it must within 90 days of the receipt of the notice, submit material, factual issues in dispute to demonstrate that there is cause for a hearing. These issues must be both substantive and relevant. The hearing will be held in the Washington, DC metropolitan area. The Secretary will deny a hearing if:

(A) The request for a hearing is untimely (ie., fails to meet the 30-day requirement);

(B) The school does not provide a statement of material, factual issues in dispute within the 90-day required period; or

(C) The statement of factual issues in dispute is frivolous or inconsequential.

In the event that the Secretary denies a hearing, the Secretary will send a written denial to the school setting forth the reasons for denial. If a hearing is denied, or if as a result of the hearing, termination is still determined to be necessary, the school will be terminated from participation in the program and will be required to return the Federal share of the revolving fund to the Department. A school terminated for failure to submit a complete report within 6 months of the close of the reporting period must continue to pursue collections and may reapply for participation in the program once it has submitted the overdue report.

(2) The following student records must be retained by the school for 5 years after the individual student ceases to be a full-time or half-time student:

(i) Approved student applications for nursing student loans;

(ii) Documentation of the financial need of applicants; and

(iii) Copy of financial aid transcripts.

(3) The following repayment records for each individual borrower must be retained for at least 5 years from the date of retirement of a loan:

(i) The amount and date of each loan;

(ii) The amount and date of each payment or cancellation;

(iii) Records of periods of deferment;

(iv) Date, nature, and result of each contract with the borrower or proper endorser in the collection of an overdue loan;

(v) Copies of all correspondence to or from the borrower and endorser;

(vi) Copies of all correspondence with a collection agency related to the individual borrower;

(vii) Copies of all correspondence with a credit bureau related to an individual borrower; and

(viii) Copies of all correspondence relating to uncollectible loans which have been written off by the Federal Government or repaid by the school.

(4) The school must also retain other records as the Secretary may prescribe. In all cases where questions have arisen as a result of a Federal audit, the records must be retained until resolution of all questions.

(b) *Inspection and audit.* (1) Any application for a Federal capital contribution will constitute the consent of the applicant school to inspection and fiscal audit, by the Secretary and the Comptroller General of the United States or any of their duly authorized representatives, of the fiscal and other

records of the applicant school which relate to the Federal capital contribution or Federal capital loan.

(2) The school must comply with the audit requirements of the Department of Health and Human Services' Administration of Grants regulations which are set forth in 45 CFR part 74.

(c) Institutional officials who have information which indicates the potential or actual commission of fraud or other offenses against the United States, involving these loan funds, should promptly provide this information to the appropriate Regional Office of Inspector General for Investigations.

(Approved by the Office of Management and Budget under control number 0915–0047)

[50 FR 34434, Aug. 23, 1985, as amended at 53 FR 46555, Nov. 17, 1988; 56 FR 13772, Apr. 4, 1991; 57 FR 45735, Oct. 1, 1992]

§ 57.316 What additional Department regulations apply to schools?

Participating schools are advised that in addition to complying with the terms and conditions of these regulations, several other regulations apply under this subpart. These include, but are not limited to:

45 CFR part 76—Governmentwide Debarment and Suspension (nonprocurement) and Governmentwide Requirements for Drug-Free Workplace (Grants)

45 CFR part 80—Nondiscrimination under programs receiving Federal assistance through the Department of Health and Human Services effectuation of title VI of the Civil Rights Act of 1964

45 CFR part 83—Regulation for the administration and enforcement of sections 794 and 855 of the Public Health Service Act

45 CFR part 84—Nondiscrimination on the basis of handicap in programs and activities receiving or benefiting from Federal financial assistance

45 CFR part 86—Nondiscrimination on the basis of sex in education programs and activities receiving or benefiting from Federal financial assistance

45 CFR part 91—Nondiscrimination on the basis of age in Health and Human Services programs or activities receiving Federal financial assistance

45 CFR part 93—New Restrictions on Lobbying

[56 FR 13772, Apr. 4, 1991, as amended at 57 FR 45735, Oct. 5, 1992; 61 FR 6123, Feb. 16, 1996]

§ 57.316a Performance standard.

On June 30, 1986, and on each June 30 thereafter, except as provided in paragraph (b) of this section, each school must have a default rate (as calculated under paragraph (a) of this section) of not more than 5 percent.

(a) The default rate for each school shall be the ratio (stated as a percentage) that the defaulted principal amount outstanding of the school bears to the matured loans of the school. For this purpose:

(1) The term ''defaulted principal amount outstanding'' means the total amount borrowed from the loan fund of a school that has reached the repayment stage (minus any principal amount repaid or canceled) on loans in default for more than 120 days; and

(2) The term ''matured loans'' means the total principal amount of all loans made by a school under this subpart minus the total principal amount of loans made by the school to students who are:

(i) Enrolled in a full-time or half-time course of study at the school; or

(ii) In their grace period.

(b) Any school that has a default rate greater than 5 percent on June 30, 1986, or on June 30 of any year thereafter will be required to:

(1) Reduce its default rate by 50 percent (or a school with a default rate below 10 percent must reduce its rate to 5 percent) by the close of the following 6-month period; and

(2) By the end of each succeeding 6-month period, reduce its default rate to 50 percent of the required rate for the previous 6-month period, until it reaches 5 percent.

(c) Any school subject to the provisions of paragraph (b) of this section which fails to comply with those requirements will receive no new NSL funds and will be required to:

(1) Place the revolving fund monies and all subsequent collections into an insured interest-bearing account;

(2) Make no loan disbursements; and

(3) By the end of the succeeding 6-month period, reduce its default rate to 50 percent of the rate it failed to achieve under paragraph (b) of this section, or 5 percent. A school that meets this requirement will be permitted to resume the use of its nursing student

loan funds, but must continue to comply with the requirements of paragraph (b)(2) of this section if its default rate is still greater than 5 percent.

A school that meets the requirements of subparagraph (c)(3) of this section will be permitted to resume the use of its NSL funds, but must continue to comply with the requirements of subparagraph (b)(2) of this section if its delinquency rate is still greater than 5 percent.

(d) Any school subject to the provisions of paragraph (c)(3) of this section which fails to comply with those requirements will be subject to termination. The Secretary will provide the school with a written notice specifying his or her intention to terminate the school's participation in the program and stating that the school may request, within 30 days of the receipt of this notice, a formal hearing. If the school requests a hearing, it must within 90 days of the receipt of the notice, submit material, factual issues in dispute to demonstrate that there is cause for a hearing. These issues must be both substantive and relevant. The hearing will be held in the Washington, DC metropolitan area. The Secretary will deny a hearing if:

(1) The request for a hearing is untimely (i.e., fails to meet the 30-day requirement);

(2) The school does not provide a statement of material, factual issues in dispute within the 90-day required period; or

(3) The statement of factual issues in dispute is frivolous or inconsequential.

In the event that the Secretary denies a hearing, the Secretary will send a written denial to the school setting forth the reasons for denial. If a hearing is denied, or if as a result of the hearing, termination is still determined to be necessary, the school will be terminated from participation in the program and will be required to return the Federal share of the revolving fund to the Department. A school terminated for failure to comply with the provisions of paragraph (c)(3) of this section must continue to pursue collections and may reapply for participation in the program only when it has attained a default rate of 5 percent or less.

(Approved by the Office of Management and Budget under control number 0915–0047)

[50 FR 34434, Aug. 23, 1985, as amended at 52 FR 10195, Mar. 30, 1987; 53 FR 46555, Nov. 17, 1988; 56 FR 13772, Apr. 4, 1991]

§ 57.317 Additional conditions.

The Secretary may, with respect to any agreement entered into with any school under § 57.305, impose additional conditions prior to or at the time of any award when in his or her judgment the conditions are necessary to assure or protect advancement of the purposes of the agreement, the interest of the public health, or the conservation of funds awarded.

§ 57.318 Noncompliance.

Whenever the Secretary finds that a participating school has failed to comply with the applicable provisions of the Act or the regulations of this subpart he or she may, on reasonable notice to the school, withhold further payments of Federal capital contributions and take other action, including the termination of any agreement, as he or she finds necessary to enforce the Act and regulations. In such case no further expenditures shall be made from the nursing student loan fund or funds involved until the Secretary determines that there is no longer any failure of compliance.

Subpart E—Grants for Construction of Nurse Training Facilities

AUTHORITY: Sec. 215, 58 Stat. 690, as amended; 42 U.S.C. 216.

§ 57.409 Good cause for other use of completed facility.

If, within 20 years after completion of construction (or, in the case of interim facilities prior to the time at which teaching in such facilities is moved to a permanent facility, whichever comes first), the facility shall cease to be used for any one or more of the purposes for which it was constructed, the Secretary, in determining whether there is good cause for releasing the applicant or other owner of the facility from the obligation so to use the facility, shall

take into consideration the extent to which:

(a) The facility will be devoted by the applicant or other owner to the teaching of other health personnel;

(b) There are reasonable assurances that for the remainder of such period other facilities not previously utilized for nurse training will be so utilized and are substantially the equivalent in nature and extent for such purposes.

[37 FR 20548, Sept. 30, 1972]

Subparts F–O [Reserved]

Subpart P—Loan Guarantees and Interest Subsidies to Assist in Construction of Teaching Facilities for Health Profession Personnel

AUTHORITY: Sec. 727, Public Health Service Act. 77 Stat. 170, as amended (42 U.S.C. 293g).

SOURCE: 38 FR 31836, Nov. 19, 1973, unless otherwise noted.

§ 57.1501 Applicability.

The regulations of this subpart are applicable to loan guarantees and interest subsidy payments made pursuant to section 729 of the Public Health Service Act (42 U.S.C. 293i) to assist nonprofit private entities which are eligible for grants under subpart B of this part in carrying out projects for construction of teaching facilities for health professions personnel.

§ 57.1502 Definitions.

As used in this subpart:

(a) All terms not defined herein shall have the same meanings as given them in section 724 of the Act.

(b) *Act* means the Public Health Service Act, as amended.

(c) *Secretary* means the Secretary of Health and Human Services and any other officer or employee of the Department of Health and Human Services to whom the authority involved may be delegated.

(d) *School* means a school of medicine, dentistry, osteopathy, pharmacy, optometry, podiatry, veterinary medicine, or public health which provides a course of study or a portion thereof which leads respectively to a degree of doctor of medicine, doctor of dental surgery or an equivalent degree, doctor of osteopathy, doctor of optometry or an equivalent degree, doctor of podiatry or an equivalent degree, bachelor of science in pharmacy or an equivalent degree, doctor of veterinary medicine or an equivalent degree, or a graduate degree in public health, and which is accredited as provided in section 721(b)(1) of the Act.

(e) *Affiliated hospital* or *affiliated outpatient facility* means a hospital or outpatient facility (as defined in section 645 of the Act) which, although not owned by such school, has a written agreement with a school of medicine, osteopathy, or dentistry eligible for assistance under subpart B of this part, providing for effective control by the school of the health professions teaching program in the hospital or outpatient facility.

(f) *Nonprofit* as applied to any school, hospital, outpatient facility, or other entity means one which is owned and operated by one or more corporations or associations no part of the net earnings of which inures, or may lawfully inure to the benefit of any private shareholder or individual.

(g) *Council* means the National Advisory Council on Health Professions Education (established pursuant to section 725 of the Act).

§ 57.1503 Eligibility.

(a) *Eligible applicants.* In order to be eligible for a loan guarantee or interest subsidy under this subpart, the applicant shall:

(1) Be a nonprofit private school of medicine, dentistry, osteopathy, pharmacy, optometry, podiatry, veterinary medicine, or public health, or any combination of such schools, or a nonprofit private affiliated hospital or affiliated outpatient facility: *Provided, however,* That in the case of an affiliated hospital or affiliated outpatient facility, an application which is approved by the school of medicine, osteopathy or dentistry with which the hospital or outpatient facility is affiliated and which otherwise complies with the requirements of subpart B of this part may be filed by any nonprofit private entity qualified to file an application under section 605 of the Act; and

(2) Otherwise meet the applicable requirements set forth in section 721(b) of the Act and § 57.103 with respect to eligiblity for grants for construction of teaching facilities for health professions personnel.

(b) *Eligible loans.* Subject to the provisions of this subpart, the Secretary may guarantee payment, when due, of principal and interest on, or may pay interest subsidies with respect to, or may both guarantee and pay interest subsidies with respect to any loan or portion thereof made to an eligible applicant by a non-Federal lender: *Provided*, That no such guarantee or interest subsidy shall apply to any loan the interest on which is exempt from Federal income taxation.

§ 57.1504 Application.

Each applicant desiring to have a loan guaranteed or to have interest subsidies paid on its behalf, or any combination of such loan guarantee or interest subsidies, shall submit an application for such assistance in such form and manner and at such time as the Secretary may require.[1]

(a) The application shall contain or be supported by such information as the Secretary may require to enable him to make the determinations required of him under the Act and this subpart.

(b) The application shall be executed by an individual authorized to act for the applicant and to assume on behalf of the applicant the obligations imposed by the terms and conditions of any loan guarantee or agreement to pay interest subsidies, including the applicable regulations of this subpart.

[38 FR 31836, Nov. 19, 1973, as amended at 49 FR 38113, Sept. 27, 1984]

§ 57.1505 Approval of applications.

(a) *General.* Any application for loan guarantee or interest subsidies, or for a combination of both, may be approved by the Secretary, after consultation with the Council, only if he makes each of the applicable determinations set forth in section 721(c) of the Act. In addition:

(1) Any such approval shall be subject to compliance by the applicant with the applicable provisions set forth in §§ 57.106, 57.107, 57.108, and 57.110: *Provided however*, That for purposes of the title assurance in § 57.107(a) the period shall be not less than 20 years or the term of the guaranteed loan, whichever is longer or in the case of interim facilities, the term of the guaranteed loan, and

(2) Any such application may be approved by the Secretary only if he determines:

(i) That the applicant will have sufficient financial resources to enable him to comply with the terms and conditions of the loan;

(ii) That the applicant has the necessary legal authority to finance, construct, and maintain the proposed project, to apply for and receive the loan, and to pledge or mortgage any assets or revenues to be given as security for such loan;

(iii) That the loan will be made only with respect to the initial permanent financing of the project;

(iv) That the loan will be secured by a lien against the facilities to be constructed or against other security satisfactory to the Secretary specified in § 57.2210;

(v) That the rate of interest on the loan does not exceed such percent per annum as the Secretary determines to be reasonable, taking into account the range of interest rates prevailing in the private market for similar loans and the risks assumed by the United States; and

(vi) Such additional determinations as the Secretary finds necessary with respect to particular applications in order to protect the financial interests of the United States.

(b) *Loan guarantees.* In addition to the requirements of paragraph (a) of this section, any application for a loan guarantee may be approved by the Secretary only if he determines that the loan with respect to which such guarantee is sought would not be available to the applicant on reasonable terms and conditions without such guarantee. To assist the Secretary in making such

[1] Applications and instructions are available from the Division of Facilities Conversion and Utilization, Bureau of Health Maintenance Organizations and Resources Development, Parklawn Building, 5600 Fishers Lane, Rockville, MD 20857.

determination, each applicant for a loan guarantee shall submit statements from at least three non-Federal institutions normally engaged in making long-term loans for construction, describing whether, and the terms and conditions under which, each institution would make a loan to the applicant for the project described in the application.

(c) *Interest subsidies.* In addition to the requirements of paragraph (a) of this section, any application for interest subsidies may be approved by the Secretary only if he determines that without such interest subsidy payments the applicant would not, over a substantial portion of the loan term, be able to repay the principal and interest of the loan without jeopardizing the quality of the educational program.

§ 57.1506 Priority.

(a) Priority in approving applications for loan guarantee and/or interest subsidies shall be determined in accordance with the factors specified in section 721(d) of the Act, and the following: (1) The relative need for increased enrollment and the availability of students; (2) the relative effectiveness of the project relative to the cost to the Federal Government; and (3) the relative ability of the applicant to make efficient and productive use of the facility constructed.

(b) In the case of applications to aid in the construction of new schools of medicine, osteopathy, or dentistry, the Secretary shall give special consideration to those applications which contain or are reasonably supported by assurances that, because of the use that will be made by such school of already existing facilities (including Federal medical or dental facilities), the school will be able to accelerate the date on which it will begin its teaching program.

§ 57.1507 Limitations applicable to loan guarantee.

(a) The amount of loan with respect to which a guarantee is made under this subpart shall be determined by the Secretary based upon such considerations as the availability of funds and the applicant's need therefor; *Provided*, That: (1) Subject to paragraph (a)(2) of this section, no loan with respect to which a guarantee is made for any project under this subpart may be in an amount which, when added to the amount of any grant made with respect to such project under part B of title VII of the Act or any other law of the United States, or to the total of such grants, exceeds 90 percent of the eligible cost of construction of such project as determined by the Secretary;

(2) Notwithstanding paragraph (a)(1) of this section, the Secretary may in particular cases guarantee loans in excess of the amount specified in paragraph (a)(1) of this section where he determines that, because of special circumstances, such additional loan guarantee will further the purposes of part B of title VII of the Act. In making such determinations, the Secretary will in each case consider the following factors:

(i) The need for the project in the area to be served;

(ii) The availability of financing for the project on reasonable terms and conditions without such additional loan guarantee;

(iii) Whether the project can be constructed without such additional loan guarantee; and

(iv) Other relevant factors consistent with the purpose of part B of title VII of the Act and this subpart.

(3) In determining the cost of construction of the project there shall be excluded from such cost all fees, interest, and other charges relating or attributable to the financing of the project except the following:

(i) Reasonable fees attributable to services rendered by legal counsel in connection with such loan;

(ii) With the approval of the Secretary, reasonable fees attributable to the services of a financial advisor in assisting the applicant in securing the loan and arranging for repayment thereof; and

(iii) Interest attributable to the interim financing of construction of the project prior to the initial permanent financing thereof.

(b) No loan guarantee under this subpart shall apply to more than 90 percent of the loss of principal of and interest on such loan incurred by the

holder of such loan upon default by the applicant.

§57.1508 Amount of interest subsidy payments; limitations.

The length of time for which interest subsidy payments will be made under the agreement, the amount of loan with respect to which such payments will be made, and the level of such payments shall be determined by the Secretary on the basis of the availability of funds and his determination of the applicant's need therefor taking into consideration his analysis of the present and reasonable projected future financial ability of the applicant to repay the principal and interest of the loan without jeopardizing the quality of its educational program: *Provided however*, That each such interest subsidy payment shall not exceed the amount necessary to reduce by 3 percent per annum the net effective interest rate otherwise payable on the loan or the portion thereof with respect to which such interest subsidy is paid.

§57.1509 Forms of credit and security instruments.

Each loan with respect to which a guarantee is made or interest subsidies are paid under this subpart shall be evidenced by a credit instrument and secured by a security instrument in such forms as may be acceptable to the Secretary.

§57.1510 Security for loans.

Each loan with respect to which a guarantee is made or interest subsidies are paid under this subpart shall be secured in a manner which the Secretary finds reasonably sufficient to insure repayment. The security may be one or a combination of the following:

(a) A first mortgage on the facility and site thereof.

(b) Negotiable stocks or bonds of a quality and value acceptable to the Secretary.

(c) A pledge of unrestricted and unencumbered income from an endowment or other trust fund acceptable to the Secretary.

(d) A pledge of a specified portion of annual general or special revenues of the applicant acceptable to the Secretary.

(e) Such other security as the Secretary may find acceptable in specific instances.

§57.1511 Opinion of legal counsel.

At appropriate stages in the application and approval procedure for a loan guarantee or interest subsidy, the applicant shall furnish to the Secretary a memorandum or opinion of legal counsel with respect to the legality of any proposed note issue, the legal authority of the applicant to issue the note and secure it by the proposed collateral, and the legality of the issue upon delivery. ''Legal counsel'' means either a law firm or individual lawyer, thoroughly experienced in the long-term financing of construction projects, and whose approving opinions have previously been accepted by lenders or lending institutions. The legal memorandum or opinion to be provided by legal counsel in each case shall be as follows:

(a) A memorandum, submitted with the application for a loan guarantee or interest subsidy, stating that the applicant is or will be lawfully authorized to finance, construct, and maintain the project, and to issue the proposed obligations and to pledge or mortgage the assets and/or revenues offered to secure the loan, citing the basis for such authority; and

(b) A final approving opinion, delivered to the Secretary at the time of delivery of the evidence of indebtedness to the lender, stating that the credit and security instruments executed by the applicant are duly authorized and delivered and that the indebtedness of the applicant is valid, binding, and payable in accordance with the terms on which the loan guarantee was approved by the Secretary.

§57.1512 Length and maturity of loans.

The repayment period for loans with respect to which guarantees are made or interest subsidies paid under this subpart shall be limited to 30 years: *Provided*, That:

(a) The Secretary may, in particular cases where he determines that a repayment period of less than 30 years is more appropriate to an applicant's

total financial plan, approve such shorter repayment period;

(b) The Secretary may, in particular cases where he determines that, because of unusual circumstances, the applicant would be financially unable to amortize the loan over a repayment period of 30 years, approve a longer requirement period which shall in no case exceed 40 years; and

(c) In no case shall a loan repayment period exceed the useful life of the facility to be constructed with the assistance of the loan.

§ 57.1513 Repayment.

Unless otherwise specifically authorized by the Secretary, each loan with respect to which a guarantee is made or interest subsidies are paid shall be repayable in substantially level total annual installments of principal and interest, sufficient to amortize the loan through the final year of the life of the loan.

§ 57.1514 Loan guarantee and interest subsidy agreements.

For each application for a loan guarantee or interest subsidy, or combination thereof, which is approved by the Secretary under this subpart, an offer to guarantee such loan and/or make interest subsidy payments with respect thereto will be sent to the applicant, setting forth the pertinent terms and conditions for the loan guarantee and/or interest subsidy, and will be conditioned upon the fulfillment of such terms and conditions. The accepted offer will constitute the loan guarantee agreement, the interest subsidy agreement, or the loan guarantee and interest subsidy agreement, as the case may be. Each such agreement shall include the applicable provisions set forth below:

(a) *Loan guarantee.* Each agreement pertaining to a loan guarantee shall include the following provisions:

(1) That the loan guarantee evidenced by the agreement shall be incontestable (i) in the hands of the applicant on whose behalf such loan guarantee is made except for fraud or misrepresentation on the part of such applicant, and (ii) as to any person who makes or contracts to make a loan to such applicant in reliance on such guarantee, except for fraud or misrepresentation on the part of such other person.

(2) That the applicant shall be permitted to prepay up to 15 percent of the original principal amount of such loan in any calendar year without additional charge. The applicant and the lender may further agree that the applicant shall be permitted to prepay in excess of 15 percent of the original amount of the loan in any calendar year without additional charge, but no such payment in excess of 15 percent shall be made without the prior written approval of the Secretary.

(3) That if the applicant shall default in making periodic payment, when due, of the principal and interest on the loan guaranteed under the agreement, the holder of the loan shall promptly give the Secretary written notification of such default. The Secretary shall, immediately upon receipt of such notice, provide the holder with written acknowledgement of such receipt.

(4) That if such default in making periodic payment when due of the principal and interest on the guaranteed loan is not cured within 90 days after receipt by the Secretary of notice of such default, the holder of the loan shall have the right to make demand upon the Secretary, in such form and manner as the Secretary may prescribe, for payment of 90 percent of the amount of the overdue payments of principal and accrued interest, together with such reasonable late charges as are made in accordance with the terms of the credit instrument or security instrument evidencing or securing such loan. The Secretary shall pay such amount from funds available to him for these purposes.

(5) That in the event of exercise by the holder of the loan of any right to accelerate payment of such loan as a result of the applicants default in making periodic payment when due of the principal and interest on the guaranteed loan, the Secretary shall, upon demand by the holder not less than 90 days after receipt by the Secretary of notification of such default, pay to such holder 90 percent of the total amount of principal and of interest on the loan remaining unpaid after the holder has exercised his right to foreclose upon and dispose of the security

and has applied the proceeds thereby received to reduce the outstanding balance of the loan, in accordance with applicable law and the terms of the security instrument.

(6) That the Secretary shall not guarantee any funds which are disbursed by a lender following notification by the Secretary to such lender that the Assurance executed by the Applicant under section 799A of the Act is no longer satisfactory.

(b) *Interest subsidy*. Each agreement pertaining to the payment of interest subsidies with respect to a loan shall include the following provisions:

(1) That the holder of the loan shall have a contractual right to receive from the United States interest subsidy payments in amounts sufficient to reduce by up to 3 percent per annum the net effective interest rate determined by the Secretary to be otherwise payable on such loan.

(2) That payments of interest subsidies pursuant to paragraph (b)(1) of this section will be made by the Secretary, in accordance with the terms of the loan with respect to which the interest subsidies are paid, directly to the holder of such loan, or to a trustee or agent designated in writing to the Secretary by such holder, until such time as the Secretary is notified in writing by the holder that such loan has been transferred. Pursuant to such written notification of transfer, the Secretary will make such interest payments directly to the new holder (transferee) of the loan: *Provided, however*, That it shall be the responsibility of the holder to remit any payments of interest subsidy to the new holder which the Secretary may have made to the holder after such transfer and prior to receipt of such written notice, and the Secretary shall not be liable to any party for amounts remitted to the holder prior to receipt of such written notice and acknowledgment in writing by the Secretary of receipt of such notice.

(3) That the holder of the loan will promptly notify the Secretary of any default or prepayment by the applicant with respect to the loan.

(4) In the event of any exercise by the holder of the loan of the right to accelerate payment of such loan, whether as a result of default on the part of the applicant or otherwise, the Secretary's obligations with respect to the payment of interest subsidies shall cease.

(5) Where, during the life of the loan with respect to which interest subsidies are to be paid, the applicant ceases to use the facility for the purposes for which constructed, the Secretary's obligation with respect to the payment of interest subsidies shall cease: *Provided, however*, That where the applicant is continuing to use the facility for purposes eligible for support under part B of title VII of the act, the Secretary may make a determination, based upon the health manpower needs of the community served by the facility as well as other relevant factors, to continue to make interest subsidy payments in accord with the agreement.

(6) Where during the life of the loan with respect to which interest subsidies are to be paid, it is determined, after an opportunity for a hearing pursuant to 45 CFR part 83, that the Assurance executed by the applicant under section 704 (or its predecessor, section 799A) of the Act, is no longer satisfactory, the Secretary's obligation with respect to the payment of interest subsidies shall cease: *Provided, however*, That the Secretary shall resume making interest subsidy payments if he determines that a subsequent Assurance submitted by the applicant is satisfactory.

(7) Where during the life of the loan with respect to which interest subsidies are to be paid, it is determined by the Secretary, after an opportunity for a hearing pursuant to 45 CFR parts 80 and 81, that the applicant has ceased to comply with the Assurance it has executed under 45 CFR 80.4(d) concerning nondiscrimination on the basis of race, color or national origin, the Secretary's obligation with respect to the payment of interest subsidies shall cease: *Provided, however*, That the Secretary shall resume making interest subsidy payments if he subsequently determines that the applicant has come into compliance with the requirements of title VI of the Civil Rights Act of 1964 and implementing regulations.

(8) Where during the life of the loan with respect to which interest subsidies are to be paid, it is determined by the Secretary after an opportunity for a hearing pursuant to title IX of the Education Amendments of 1972, that the applicant has ceased to comply with such title, and its implementing regulations, the Secretary's obligation with respect to the payment of interest subsidies shall cease: *Provided*, *however*, That the Secretary shall resume making interest subsidy payments if he subsequently determines that the applicant has come into compliance with the requirements of title IX of the Education Amendments of 1972 and implementing regulations.

(c) *General*. In addition to the applicable requirements of paragraphs (a) and (b) of this section, each agreement, whether pertaining to a loan guarantee or interest subsidy or both, shall contain such other provisions as the Secretary finds necessary in order to protect the financial interests of the United States.

[38 FR 31836, Nov. 19, 1973, as amended at 49 FR 38113, Sept. 27, 1984]

§ 57.1515 Loan closing.

Closing of any loan with respect to which a guarantee is made or interest subsidies are paid under this subpart shall be accomplished at such time as may be agreed upon by the parties to such loan and found acceptable to the Secretary.

§ 57.1516 Right of recovery-subordination.

(a) The United States shall be entitled to recover from the applicant for a loan guarantee under this subpart the amount of any payment made pursuant to such guarantee, unless the Secretary waives such right of recovery as provided in § 57.1517.

(b) Upon making of any payments pursuant to a loan guarantee under this subpart, the United States shall be subrogated to all of the rights of the recipient of the payments with respect to which the guarantee was made.

§ 57.1517 Waiver of right of recovery.

In determining whether there is good cause for waiver of any right of recovery which he may have against any applicant by reason of any payments made pursuant to a loan guarantee under this subpart, the Secretary shall take into consideration the extent to which:

(a) The facility with respect to which the loan guarantee was made will continue to be devoted by the applicant or other owner to the teaching of health professions personnel, or to other purposes in the sciences related to health for which funds are available under part B of title VII of the act and these regulations;

(b) A hospital or outpatient facility will be used as provided for under title VI of the act;

(c) There are reasonable assurances that for the remainder of the repayment period of the loan other facilities not previously utilized for the purpose for which the facility was constructed will be so utilized and are substantially equivalent in nature and extent for such purposes; and

(d) Such recovery would seriously curtail the training of qualified health professions personnel in the area served by the facility.

§ 57.1518 Modification of loans.

No official of the Department of Health and Human Services will approve any proposal to modify the terms of a loan guaranteed under title VII of the Public Health Service Act (42 U.S.C. 293 *et seq.*) and this subpart which would permit the use of the guaranteed loan (or the guarantee) as collateral for an issue of tax-exempt securities.

(Secs. 215 and 726, Public Health Service Act, 58 Stat. 690 and 85 Stat. 432, 42 U.S.C. 216 and 293i, as amended)

[48 FR 42984, Sept. 21, 1983]

Subparts Q–T [Reserved]

Subpart U—Armed Forces Health Professions Scholarship Program

AUTHORITY: Sec. 2(a), Pub. L. 92–426, 86 Stat. 719 (10 U.S.C. 2127(d)).

SOURCE: 38 FR 20447, Aug. 1, 1973, unless otherwise noted.

§ 57.2001 Applicability.

In the event the Secretary of Defense decides to enter into one or more contracts under 10 U.S.C. 2127(d), the regulations in this subpart outline considerations the Secretary of Defense will take into account in determining whether an accredited civilian educational institution has increased its total enrollment for the sole purpose of accepting members of the Armed Forces health professions scholarship program.

§ 57.2002 Definitions.

As used in this subpart:

(a) *Institution* means a college, university, or other institution or a department, division, or other administrative unit within a college, university, or other institution, which provides primarily or exclusively a course of study in medicine, dentistry, or other health profession, as determined under regulations prescribed by the Secretary of Defense, leading to a degree in one of said health professions, and which is accredited by an accrediting agency or association recognized by the United States Commissioner of Education.

(b) *Enrollment* in any fiscal year means the number of full-time students enrolled in an institution on October 15 of said year and pursuing a course of study which constitutes a full-time academic workload, as determined by the institution, leading to a degree in medicine, dentistry, or other health profession, as determined under regulations prescribed by the Secretary of Defense: *Provided*, That if the Secretary of Defense finds that a date other than October 15 would more accurately reflect an institution's enrollment in any fiscal year, the Secretary of Defense may use such other date in place of October 15 in making his determination under this subpart.

(c) *Fiscal year* means the Federal fiscal year beginning July 1 and ending on the following June 30.

(d) *Program* means the Armed Forces health professions scholarship program established under section 2(a) of the Uniformed Services Health Professions Revitalization Act of 1972 (86 Stat. 713, Pub. L. 92–426), and codified in chapter 105 of 10 U.S.C.

§ 57.2003 Determinations of increased enrollment solely for the program.

In the event the Secretary of Defense decides to enter into one or more contracts under 10 U.S.C. 2127(d), his determination as to whether an institution has increased its total enrollment in any fiscal year for the sole purpose of accepting members of the program will take into account the following considerations:

(a) A comparison of the total enrollment in said fiscal year with the total enrollments in immediately preceding fiscal years;

(b) Any increases in enrollment to which the institution has directly or indirectly committed itself in said fiscal year under: (1) Other Federal programs, such as those set forth in title VII and VIII of the Public Health Service Act (42 U.S.C. 292 *et seq.*), the Veterans' Administration Medical School Assistance and Health Manpower Training Act of 1972 (Pub. L. 92–541, 86 Stat. 1100 (38 U.S.C. 5070 *et seq.*)) and section 225 of the Public Health Service Act (sec. 5, Pub. L. 92–585, 86 Stat. 1293 (42 U.S.C. 234)); (2) programs of State or local governments or other public or private agencies, or (3) any legally binding arrangement: *Provided*, That insofar as a single increase may be applied to satisfy the commitments under two or more programs and/or other arrangements, said increase shall be considered to meet all such commitments;

(c) Any unusual factors, such as: (1) An institution having been newly established or (2) an institution experiencing what is for it an abnormal rate of attrition and/or admission.

Subpart V [Reserved]

Subpart W—Physician Shortage Area Scholarship Grants

AUTHORITY: Sec. 215, 58 Stat. 690, as amended (42 U.S.C. 216).

SOURCE: 39 FR 28730, Aug. 9, 1974, unless otherwise noted.

§ 57.2201 Applicability.

The regulations of this subpart are applicable to scholarship grants awarded under section 784 of the Public Health Service Act, which authorizes

the Secretary to award scholarship grants to students of medicine and osteopathy who agree to engage in the full-time practice of primary care for a prescribed period of time (a) in a physician shortage area or (b) in such manner as to assure that of the patients receiving medical care in such practice a substantial portion will consist of migratory agricultural workers or members of their families.

§ 57.2202 Definitions.

As used in this subpart, the following terms shall have the following meanings:

(a) *Act* means the Public Health Service Act, as amended.

(b) *Secretary* means the Secretary of Health and Human Services and any other officer or employee of the Department of Health and Human Services to whom the authority involved has been delegated.

(c) *School* means a public or other nonprofit school of medicine or osteopathy which provides a course of study, or a portion thereof, which leads respectively to a degree of Doctor of Medicine or Doctor of Osteopathy and which is accredited as provided in section 721(b)(1)(B) of the Act.

(d) *Scholarship grant* means the amount of money awarded to an individual by the Secretary for an academic year pursuant to section 784(a) of the Act.

(e) *Full-time student* means a student who is enrolled, or accepted for enrollment, in a school and pursuing a course of study which constitutes a full-time academic workload, as determined by the school, leading to a degree specified in paragraph (c) of this section.

(f) *Academic year* means the traditional, approximately 9-month September to June annual session. For the purpose of computing academic year equivalents for students who, during a 12-month period, attend for a longer period than the traditional academic year, the academic year will be considered to be of 9 months' duration.

(g) *National of the United States* means (1) a citizen of the United States or (2) a person who, though not a citizen of the United States, owes permanent allegiance to the United States (8 U.S.C. 1101(a)(22)).

(h) *Professional training* means the course of study leading to the degree of doctor of medicine or doctor of osteopathy, plus a period, not to exceed a total of four years, of internship and residency training.

(i) *Low-income background* as applied to any individual means that the individual comes from a family with an annual income below low-income levels developed pursuant to § 57.605(c).

(j) *The practice of primary care* means the provision of health services characterized by the delivery of first contact medicine, the assumption of longitudinal responsibility for the patient regardless of the presence or absence of disease, and the integration of the physical, psychological and social aspects of health care to the limits of the capability of the practitioner. For purposes of this section, primary care shall include the fields of general practice, family practice, general internal medicine, general pediatrics, and general obstetrics and gynecology.

(k) *Migratory agricultural worker* means a domestic agricultural migratory worker as defined in § 56.102(d).

(l) *Physician shortage area* means an area designated by the Secretary pursuant to § 57.216(a)(5) as an area having a need for and shortage of physicians.

§ 57.2203 Eligibility.

To be eligible for a scholarship grant under this subpart, the applicant must:

(a) Be a national of the United States or a permanent resident of the Trust Territory of the Pacific Islands or a lawful permanent resident of the United States, Puerto Rico, the Virgin Islands or Guam;

(b) Be a full-time student in a school located in the United States, the Trust Territory of the Pacific Islands, Puerto Rico, the Virgin Islands, the Canal Zone, American Samoa or Guam; and

(c) Agree to engage in the full-time practice of primary care as defined in § 57.2202(j) in accord with conditions specified in § 57.2209.

§ 57.2204 Application.

Each eligible applicant desiring a scholarship grant under this subpart shall submit an application at such time and in such form as the Secretary may prescribe.

§ 57.2205 Priority for selection of scholarship recipients.

(a) When funds determined by the Secretary to be available for scholarship grants under this subpart are insufficient to permit the awarding of scholarships to all individuals applying therefor, the Secretary shall accord priority to eligible applicants as follows:

(1) First priority for scholarship grants shall be accorded to applicants who (i) are from a low-income background as defined in § 57.2202 (i), (ii) reside in a physician shortage area and (iii) agree to return to such area and engage in the full-time practice of primary care. For purposes of this paragraph, an individual resides in a physician shortage area if he presently is residing in such an area or if he (or his parents) resided in such an area in the year prior to his admission to an institution of higher education.

(2) Second priority shall be accorded to applicants meeting the criteria in paragraphs (a)(1) (ii) and (iii) of this section.

(3) Third priority shall be accorded to applicants meeting the criterion in paragraph (a)(1)(i) of this section.

(4) Fourth priority shall be accorded to other applicants.

(b) Where there are insufficient funds available to make scholarship grants to all members of any single priority grouping enumerated in paragraph (a) of this section, the following criteria will be used to accord priority within each affected priority group:

(1) Within the priority groupings specified in paragraphs (a) (1) and (2) of this section, the Secretary shall rank recipients according to the degree of the severity of shortage of physicians practicing primary care in such area. Scholarship grants shall be awarded within each priority group first to applicants within that grouping from physician shortage areas with the least favorable ratio of such physicians to the population to be served.

(2) Within the priority groupings specified in paragraphs (a) (3) and (4) of this section, the Secretary shall award scholarship grants within each priority group first to applicants who agree to practice primary care in a physician shortage area with a substantial portion of migratory agricultural workers in such area; second, to applicants within that grouping who agree to practice in a physician shortage area; and third, to applicants within that grouping who agree to practice in such place or places, facility or facilities, and in such manner as the Secretary finds necessary to assure that, of the patients receiving medical care in such practice, a substantial portion will consist of persons who are migratory agricultural workers or members of their families.

§ 57.2206 Grant award.

The Secretary may award scholarship grants to individuals who have been selected to receive scholarship grants in accordance with § 57.2205. Any such award under this subpart shall state the specific conditions under which the award is being made and shall indicate the distribution between funds awarded to cover the costs of tuition and fees payable to the school and funds awarded for the costs of equipment, supplies, books, and living expenses payable to the individual.

§ 57.2207 Amount of scholarship grant.

(a) The amount of the scholarship grant to any student for any academic year shall be the total of (1) the lesser of (i) $5,000 or (ii) the amount determined by the Secretary to be the cost of tuition and fees; plus (2) an allowance for equipment, supplies, books and living expenses which shall be the lesser of (i) $3,600 or (ii) the difference between $5,000 and the amount determined pursuant to paragraph (a)(1) of this section.

(b) The maximum amount of a scholarship grant during a 12-month period to any student enrolled in a school which provides a course of study longer than the traditional 9-month academic year may be proportionately increased.

§ 57.2208 Payment of scholarship grant.

The portion of a scholarship grant awarded for the costs of tuition and fees as indicated on the notice of grant award document will be paid directly to the school upon receipt of an invoice from the school. The portion of the scholarship grant awarded for the costs

of equipment, supplies, books, and living expenses will be paid to the individual in equal monthly installments.

§ 57.2209 Conditions of scholarship grant.

(a) Any scholarship grant made to any individual under this subpart shall be awarded upon the condition that such individual will, following completion of his professional training, engage in the full-time practice of primary care for a period of 12 continuous months for each academic year (*i.e.*, 9 months) for which a scholarship grant was made, as follows:

(1) In the case of any individual selected pursuant to § 57.2205(a) (1) or (2), such practice must be in the physician shortage area to which such individual agreed to return: *Provided however,* That if the Secretary determines at the time the individual proposes to engage in the required practice that such area is no longer a physician shortage area and cannot reasonably be expected to become such an area within 2 years from such time, such practice shall, at the option of the individual, be either in any then current physician shortage area, or in such place or places, facility, or facilities, and in such manner as the Secretary finds necessary to assure that, of the patients receiving medical care in such practice, a substantial portion will consist of persons who are migratory agricultural workers or members of their families.

(2) In the case of any individual selected pursuant to § 57.2205(a) (3) or (4), such practice must be in accordance with the agreement described in § 57.2205(b)(2) (*i.e.*, in a physician shortage area with a substantial portion of migratory agricultural workers in such area; a physician shortage area; or in such place or places, facility or facilities, and in such manner as may be necessary to assure that, of the patients receiving medical care in such practice, a substantial portion will consist of persons who are migratory agricultural workers or members of their families; as the case may be).

(b) Subject to the provision of § 57.2211(f) and except as provided in paragraph (c) of this section, any individual to whom the conditions of this section apply must complete the practice required by paragraph (a) of this section within a period beginning on the date of completion by the individual of his professional training, as determined by the Secretary, and not to exceed the period of practice determined in accordance with such paragraph (a) of this section, plus 6 months.

(c) Where an individual to whom the conditions of this section apply is currently performing an active duty service obligation under section 235 of the Act, the individual must complete the practice required by paragraph (a) of this section within a period beginning on the date of completion by the individual of his service obligation under section 225 of the Act or completion of his internship and residency training (not to exceed four years) if not previously received, whichever comes later, and not to exceed the period of practice determined in accordance with paragraph (a) of this section, plus 6 months.

(d) Where an individual has received scholarship grant support for four academic years, such individual shall be considered to have received scholarship grant support for only three academic years if the Secretary determines (1) that such individual has served his internship or residency in a hospital (i) which is located in a physician shortage area, or (ii) in which a substantial portion of the patients of such hospital consists of persons who are migratory agricultural workers or members of the families of such workers and (2) that while so serving such internship or residency, he has received training or professional experience designed to prepare him to engage in the practice of primary care.

(e) For purposes of paragraph (c)(2) of this section, (1) internships which will be recognized by the Secretary as providing training or professional experience designed to prepare an individual to engage in the practice of primary care are: Rotating internships without a major emphasis, rotating internships with an emphasis on internal medicine, rotating internships with an emphasis on pediatrics, rotating internships with an emphasis on obstetrics and gynecology, straight internships in internal

medicine, straight internships in pediatrics and straight internships in obstetrics and gynecology; *Provided*, That such internships are approved or provisionally approved by the Council on Medical Education of the American Medical Association or the Board of Trustees of the American Osteopathic Association; and

(2) Residencies which will be recognized as providing such training or experience are those in general practice, family practice, general internal medicine, general pediatrics and general obstetrics and gynecology; *Provided*, That such residencies are approved or provisionally approved by the Council on Medical Education of the American Medical Association or the Board of Trustees of the American Osteopathic Association.

(f) No individual who has received a scholarship grant under this subpart may enter into an agreement with the Secretary pursuant to section 741(f) of the Act until either (1) such individual has completed the practice required by paragraph (a) of this section, or (2) the Secretary has determined that the United States is entitled to recover from such individual an amount determined in accordance with § 57.2210. In no case, however, shall a scholarship grant under this subpart be considered an educational loan for purposes of section 741(f) of the Act.

[39 FR 28730, Aug. 9, 1974, as amended at 41 FR 26685, June 29, 1976]

§ 57.2210 Failure to comply.

(a) Subject to the provision of § 57.2211, if any individual fails to complete the course of study or fails, within the time period set forth in § 57.2209(b), to meet the applicable conditions of practice imposed by receipt of a scholarship grant for the full number of months to which such condition is applicable, the United States shall be entitled to recover from such individual an amount determined in accordance with section 784(c)(3) of the Act; *Provided however*, That no interest shall accrue on any amount due the United States during any period for which the Secretary has suspended the obligation to repay pursuant to § 57.2211(b).

§ 57.2211 Waiver or suspension.

(a) Any obligation of any individual under this subpart will be cancelled upon the death of such individual as documented by a certification of death, or such other official proof as is conclusive under State law, and submitted to the Secretary.

(b) Subject to the provision of paragraph (f) of this section, where an individual fails to complete the practice required by § 57.2209(a) within the period prescribed in § 57.2209(b), the Secretary may waive or suspend for such period as determined by the Secretary the obligation of such individual to repay pursuant to § 57.2210 where the Secretary determines that compliance by such individual with such obligation (1) is impossible, or (2) would involve extreme hardship to such individual and enforcement of such obligation with respect to such individual would be against equity and good conscience.

(c) For purposes of paragraph (b)(1) of this section, compliance by an individual will be deemed impossible where the Secretary determines, on the basis of such information and documentation as he may require, that the individual is permanently and totally disabled.

(d) For purposes of paragraph (b)(2) of this section, in determining whether compliance by an individual would involve extreme hardship to such individual and would be against equity and good conscience, the Secretary will take into consideration the following:

(1) The individual's present financial resources and obligations;

(2) The individual's estimated future financial resources and obligations;

(3) The reasons for the individual's failure to complete such practice within the prescribed period, such as problems of a personal nature; and

(4) The extent to which the individual is practicing his profession in a manner consistent with the purposes of section 784 of the Act.

(e) Where the Secretary determines that compliance by an individual with his obligation to engage in the practice of primary care in a specified shortage area pursuant to § 57.2209(a) is impossible or would involve extreme hardship to such individual and enforcement of such obligation with respect to

such individual would be against equity and good conscience, the Secretary may waive such obligation and permit the individual at his option to practice either in any then current physician shortage area, or in such place or places, facility or facilities, and in such manner as the Secretary finds necessary to assure that, of the patients receiving medical care in such practice, a substantial portion will consist of persons who are migratory agricultural workers or members of their families. The Secretary will take into consideration in determining whether to grant a waiver under this paragraph the extent to which the individual has problems of a personal nature, e.g., physical or mental disability, terminal illness in the family, or need for financial support that cannot be supplied by the required service, which intrude upon the individual's ability to perform the required service in the specified shortage area.

(f) The Secretary may extend the period (prescribed in § 57.2209(b)) within which an individual must complete the practice required pursuant to § 57.2209(a) for a period not to exceed one year where the Secretary finds that (1) such individual is unable to complete such practice within such period because of a temporary physical or mental disability, or (2) completion by such individual of such practice within such period would involve extreme hardship to such individual and that failure to so extend such period would be against equity and good conscience.

Subparts AA–FF [Reserved]

Subpart GG—Payment for Tuition and Other Educational Costs

AUTHORITY: Sec. 215, Public Health Service Act, 58 Stat. 690, as amended by 63 Stat. 35 (42 U.S.C. 216); sec. 711, Public Health Service Act, 90 Stat. 2253; section 710, PHS Act, as redesignated by Pub. L. 97–35, 95 Stat. 915 (42 U.S.C. 292k).

§ 57.3201 To which programs do these regulations apply?

The regulations in this subpart establish the criteria to be used in determining allowable increases in tuition and other educational costs for which the Secretary is responsible for payment under the following sections of the Public Health Service Act: The National Health Service Corps Scholarship Program (sec. 338A) (42 U.S.C. 2541) and the Indian Health Scholarship Program (awarded pursuant to sec. 338A–339G of the PHS Act) (25 U.S.C. 1613a). These programs are referred to herein as the ''scholarship programs.'' The regulations apply to increases in tuition and other educational costs occurring after the school year beginning immediately before October 1, 1981.

[57 FR 45745, Oct. 5, 1992]

§ 57.3202 How will allowable increases be determined?

(a) The Secretary is responsible for increases in tuition and other educational costs only if the same increase is charged to all students in the same category (for example, the same class year or place of residence) and without regard to whether the student is receiving support under the scholarship programs. A student participating in the scholarship programs may not be denied eligibility because of this participation for any discounts or rebates in tuition or other educational costs given to all other students in the same category at the institution.

(b) Institutions whose enrollment contains 25 percent or more students participating in the scholarship programs, and whose percentage increase in tuition and other educational costs in any school year exceeds the previous calendar year's average inflation rate as indicated by the *Consumer Price Index for All Urban Areas*, may be requested to provide the Secretary with detailed cost breakdowns justifying the increase.

(c) In the case of a school which is requested to provide the Secretary with cost increase justification under paragraph (b) of this section, the Secretary will be responsible for increases in tuition and other educational costs charged to students participating in the scholarship programs over the amount charged for the school year immediately preceding the increase only to the extent that they are: (1) Attributable to uncontrollable costs, such as fuel costs, mandated cost-of-living increases in wages, salaries and fringe

benefits, (2) attributable to costs of maintaining and improving the quality of the health professions education provided by the institution, such as hiring additional faculty to improve the faculty-student ratio, costs incurred in off-site training of students, and necessary improvements in teaching equipment. Increases in patient care and research costs are allowable as part of an increase in tuition and other educational costs only to the extent that they can be documented as clearly necessary to maintain and improve the quality of the education being supported; or (3) attributable to loss of revenue from other sources which was used solely for the maintenance and improvement of the educational system.

These three categories of valid escalators of tuition and other educational costs are exclusive. However, the examples *within* each category are merely illustrative and not meant to be inclusive.

(d) If the Secretary, after reviewing all available data, information, and justifications submitted by an institution, determines that an increase in tuition and other educational costs is not allowable under the criteria described in paragraph (a) or (c) of this section, the Secretary will provide the affected institution a detailed written explanation of the basis of that determination. The Secretary will be responsible for that portion of tuition and other educational costs the Secretary determines to be allowable.

[45 FR 71568, Oct. 29, 1980]

Subparts HH–PP [Reserved]

PART 58—GRANTS FOR TRAINING OF PUBLIC HEALTH AND ALLIED HEALTH PERSONNEL

Subparts A–F [Reserved]

PART 59—GRANTS FOR FAMILY PLANNING SERVICES

Subpart A—Project Grants for Family Planning Services

Sec.
59.1 To what programs do these regulations apply?
59.2 Definitions.
59.3 Who is eligible to apply for a family planning services grant?
59.4 How does one apply for a family planning services grant?
59.5 What requirements must be met by a family planning project?
59.6 What procedures apply to assure the suitability of informational and educational material?
59.7 What criteria will the Department of Health and Human Services use to decide which family planning services projects to fund and in what amount?
59.8 How is a grant awarded?
59.9 For what purposes may grant funds be used?
59.10 What other HHS regulations apply to grants under this subpart?
59.11 Confidentiality.
59.12 Additional conditions.

Subpart B [Reserved]

Subpart C—Grants for Family Planning Service Training

59.201 Applicability.
59.202 Definitions.
59.203 Eligibility.
59.204 Application for a grant.
59.205 Project requirements.
59.206 Evaluation and grant award.
59.207 Payments.
59.208 Use of project funds.
59.209 Civil rights.
59.210 Inventions or discoveries.
59.211 Publications and copyright.
59.212 Grantee accountability.
59.213 [Reserved]
59.214 Additional conditions.
59.215 Applicability of 45 CFR part 74.

Subpart A—Project Grants for Family Planning Services

AUTHORITY: 42 U.S.C. 300a–4.

SOURCE: 65 FR 41278, July 3, 2000, unless otherwise noted.

§59.1 To what programs do these regulations apply?

The regulations of this subpart are applicable to the award of grants under

section 1001 of the Public Health Service Act (42 U.S.C. 300) to assist in the establishment and operation of voluntary family planning projects. These projects shall consist of the educational, comprehensive medical, and social services necessary to aid individuals to determine freely the number and spacing of their children.

[65 FR 41278, July 3, 2000; 65 FR 49057, Aug. 10, 2000]

§ 59.2 Definitions.

As used in this subpart:

Act means the Public Health Service Act, as amended.

Family means a social unit composed of one person, or two or more persons living together, as a household.

Low income family means a family whose total annual income does not exceed 100 percent of the most recent Poverty Guidelines issued pursuant to 42 U.S.C. 9902(2). ''Low-income family'' also includes members of families whose annual family income exceeds this amount, but who, as determined by the project director, are unable, for good reasons, to pay for family planning services. For example, unemancipated minors who wish to receive services on a confidential basis must be considered on the basis of their own resources.

Nonprofit, as applied to any private agency, institution, or organization, means that no part of the entity's net earnings benefit, or may lawfully benefit, any private shareholder or individual.

Secretary means the Secretary of Health and Human Services and any other officer or employee of the Department of Health and Human Services to whom the authority involved has been delegated.

State includes, in addition to the several States, the District of Columbia, Guam, the Commonwealth of Puerto Rico, the Northern Mariana Islands, the U.S. Virgin Islands, American Samoa, the U.S. Outlying Islands (Midway, Wake, *et al.*), the Marshall Islands, the Federated State of Micronesia and the Republic of Palau.

[65 FR 41278, July 3, 2000; 65 FR 49057, Aug. 10, 2000]

§ 59.3 Who is eligible to apply for a family planning services grant?

Any public or nonprofit private entity in a State may apply for a grant under this subpart.

§ 59.4 How does one apply for a family planning services grant?

(a) Application for a grant under this subpart shall be made on an authorized form.

(b) An individual authorized to act for the applicant and to assume on behalf of the applicant the obligations imposed by the terms and conditions of the grant, including the regulations of this subpart, must sign the application.

(c) The application shall contain—

(1) A description, satisfactory to the Secretary, of the project and how it will meet the requirements of this subpart;

(2) A budget and justification of the amount of grant funds requested;

(3) A description of the standards and qualifications which will be required for all personnel and for all facilities to be used by the project; and

(4) Such other pertinent information as the Secretary may require.

§ 59.5 What requirements must be met by a family planning project?

(a) Each project supported under this part must:

(1) Provide a broad range of acceptable and effective medically approved family planning methods (including natural family planning methods) and services (including infertility services and services for adolescents). If an organization offers only a single method of family planning, it may participate as part of a project as long as the entire project offers a broad range of family planning services.

(2) Provide services without subjecting individuals to any coercion to accept services or to employ or not to employ any particular methods of family planning. Acceptance of services must be solely on a voluntary basis and may not be made a prerequisite to eligibility for, or receipt of, any other

services, assistance from or participation in any other program of the applicant.[1]

(3) Provide services in a manner which protects the dignity of the individual.

(4) Provide services without regard to religion, race, color, national origin, handicapping condition, age, sex, number of pregnancies, or marital status.

(5) Not provide abortion as a method of family planning. A project must:

(i) Offer pregnant women the opportunity to be provided information and counseling regarding each of the following options:

(A) Prenatal care and delivery;

(B) Infant care, foster care, or adoption; and

(C) Pregnancy termination.

(ii) If requested to provide such information and counseling, provide neutral, factual information and nondirective counseling on each of the options, and referral upon request, except with respect to any option(s) about which the pregnant woman indicates she does not wish to receive such information and counseling.

(6) Provide that priority in the provision of services will be given to persons from low-income families.

(7) Provide that no charge will be made for services provided to any persons from a low-income family except to the extent that payment will be made by a third party (including a government agency) which is authorized to or is under legal obligation to pay this charge.

(8) Provide that charges will be made for services to persons other than those from low-income families in accordance with a schedule of discounts based on ability to pay, except that charges to persons from families whose annual income exceeds 250 percent of the levels set forth in the most recent Poverty Guidelines issued pursuant to 42 U.S.C. 9902(2) will be made in accordance with a schedule of fees designed to recover the reasonable cost of providing services.

(9) If a third party (including a Government agency) is authorized or legally obligated to pay for services, all reasonable efforts must be made to obtain the third-party payment without application of any discounts. Where the cost of services is to be reimbursed under title XIX, XX, or XXI of the Social Security Act, a written agreement with the title XIX, XX or XXI agency is required.

(10)(i) Provide that if an application relates to consolidation of service areas or health resources or would otherwise affect the operations of local or regional entities, the applicant must document that these entities have been given, to the maximum feasible extent, an opportunity to participate in the development of the application. Local and regional entities include existing or potential subgrantees which have previously provided or propose to provide family planning services to the area proposed to be served by the applicant.

(ii) Provide an opportunity for maximum participation by existing or potential subgrantees in the ongoing policy decisionmaking of the project.

(11) Provide for an Advisory Committee as required by §59.6.

(b) In addition to the requirements of paragraph (a) of this section, each project must meet each of the following requirements unless the Secretary determines that the project has established good cause for its omission. Each project must:

(1) Provide for medical services related to family planning (including physician's consultation, examination prescription, and continuing supervision, laboratory examination, contraceptive supplies) and necessary referral to other medical facilities when medically indicated, and provide for the effective usage of contraceptive devices and practices.

[1] Section 205 of Pub. L. 94–63 states: ''Any (1) officer or employee of the United States, (2) officer or employee of any State, political subdivision of a State, or any other entity, which administers or supervises the administration of any program receiving Federal financial assistance, or (3) person who receives, under any program receiving Federal assistance, compensation for services, who coerces or endeavors to coerce any person to undergo an abortion or sterilization procedure by threatening such person with the loss of, or disqualification for the receipt of, any benefit or service under a program receiving Federal financial assistance shall be fined not more than $1,000 or imprisoned for not more than one year, or both.''

(2) Provide for social services related to family planning, including counseling, referral to and from other social and medical services agencies, and any ancillary services which may be necessary to facilitate clinic attendance.

(3) Provide for informational and educational programs designed to—

(i) Achieve community understanding of the objectives of the program;

(ii) Inform the community of the availability of services; and

(iii) Promote continued participation in the project by persons to whom family planning services may be beneficial.

(4) Provide for orientation and in-service training for all project personnel.

(5) Provide services without the imposition of any durational residency requirement or requirement that the patient be referred by a physician.

(6) Provide that family planning medical services will be performed under the direction of a physician with special training or experience in family planning.

(7) Provide that all services purchased for project participants will be authorized by the project director or his designee on the project staff.

(8) Provide for coordination and use of referral arrangements with other providers of health care services, local health and welfare departments, hospitals, voluntary agencies, and health services projects supported by other federal programs.

(9) Provide that if family planning services are provided by contract or other similar arrangements with actual providers of services, services will be provided in accordance with a plan which establishes rates and method of payment for medical care. These payments must be made under agreements with a schedule of rates and payment procedures maintained by the grantee. The grantee must be prepared to substantiate, that these rates are reasonable and necessary.

(10) Provide, to the maximum feasible extent, an opportunity for participation in the development, implementation, and evaluation of the project by persons broadly representative of all significant elements of the population to be served, and by others in the community knowledgeable about the community's needs for family planning services.

[65 FR 41278, July 3, 2000; 65 FR 49057, Aug. 10, 2000]

§ 59.6 What procedures apply to assure the suitability of informational and educational material?

(a) A grant under this section may be made only upon assurance satisfactory to the Secretary that the project shall provide for the review and approval of informational and educational materials developed or made available under the project by an Advisory Committee prior to their distribution, to assure that the materials are suitable for the population or community to which they are to be made available and the purposes of title X of the Act. The project shall not disseminate any such materials which are not approved by the Advisory Committee.

(b) The Advisory Committee referred to in paragraph (a) of this section shall be established as follows:

(1) *Size.* The Committee shall consist of no fewer than five but not more than nine members, except that this provision may be waived by the Secretary for good cause shown.

(2) *Composition.* The Committee shall include individuals broadly representative (in terms of demographic factors such as race, color, national origin, handicapped condition, sex, and age) of the population or community for which the materials are intended.

(3) *Function.* In reviewing materials, the Advisory Committee shall:

(i) Consider the educational and cultural backgrounds of individuals to whom the materials are addressed;

(ii) Consider the standards of the population or community to be served with respect to such materials;

(iii) Review the content of the material to assure that the information is factually correct;

(iv) Determine whether the material is suitable for the population or community to which is to be made available; and

(v) Establish a written record of its determinations.

§ 59.7 What criteria will the Department of Health and Human Services use to decide which family planning services projects to fund and in what amount?

(a) Within the limits of funds available for these purposes, the Secretary may award grants for the establishment and operation of those projects which will in the Department's judgment best promote the purposes of section 1001 of the Act, taking into account:

(1) The number of patients, and, in particular, the number of low-income patients to be served;

(2) The extent to which family planning services are needed locally;

(3) The relative need of the applicant;

(4) The capacity of the applicant to make rapid and effective use of the federal assistance;

(5) The adequacy of the applicant's facilities and staff;

(6) The relative availability of nonfederal resources within the community to be served and the degree to which those resources are committed to the project; and

(7) The degree to which the project plan adequately provides for the requirements set forth in these regulations.

(b) The Secretary shall determine the amount of any award on the basis of his estimate of the sum necessary for the performance of the project. No grant may be made for less than 90 percent of the project's costs, as so estimated, unless the grant is to be made for a project which was supported, under section 1001, for less than 90 percent of its costs in fiscal year 1975. In that case, the grant shall not be for less than the percentage of costs covered by the grant in fiscal year 1975.

(c) No grant may be made for an amount equal to 100 percent for the project's estimated costs.

§ 59.8 How is a grant awarded?

(a) The notice of grant award specifies how long HHS intends to support the project without requiring the project to recompete for funds. This period, called the project period, will usually be for three to five years.

(b) Generally the grant will initially be for one year and subsequent continuation awards will also be for one year at a time. A grantee must submit a separate application to have the support continued for each subsequent year. Decisions regarding continuation awards and the funding level of such awards will be made after consideration of such factors as the grantee's progress and management practices, and the availability of funds. In all cases, continuation awards require a determination by HHS that continued funding is in the best interest of the government.

(c) Neither the approval of any application nor the award of any grant commits or obligates the United States in any way to make any additional, supplemental, continuation, or other award with respect to any approved application or portion of an approved application.

§ 59.9 For what purpose may grant funds be used?

Any funds granted under this subpart shall be expended solely for the purpose for which the funds were granted in accordance with the approved application and budget, the regulations of this subpart, the terms and conditions of the award, and the applicable cost principles prescribed in 45 CFR Part 74 or Part 92, as applicable.

§ 59.10 What other HHS regulations apply to grants under this subpart?

Attention is drawn to the following HHS Department-wide regulations which apply to grants under this subpart. These include:

37 CFR Part 401—Rights to inventions made by nonprofit organizations and small business firms under government grants, contracts, and cooperative agreements

42 CFR Part 50, Subpart D—Public Health Service grant appeals procedure

45 CFR Part 16—Procedures of the Departmental Grant Appeals Board

45 CFR Part 74—Uniform administrative requirements for awards and subawards to institutions of higher education, hospitals, other nonprofit organizations, and commercial organizations; and certain grants and agreements with states, local governments and Indian tribal governments

45 CFR Part 80—Nondiscrimination under programs receiving Federal assistance through the Department of Health and Human Services effectuation of Title VI of the Civil Rights Act of 1964

45 CFR Part 81—Practice and procedure for hearings under Part 80 of this Title
45 CFR Part 84—Nondiscrimination on the basis of handicap in programs and activities receiving or benefitting from Federal financial assistance
45 CFR Part 91—Nondiscrimination on the basis of age in HHS programs or activities receiving Federal financial assistance
45 CFR Part 92—Uniform administrative requirements for grants and cooperative agreements to state and local governments

§ 59.11 Confidentiality.

All information as to personal facts and circumstances obtained by the project staff about individuals receiving services must be held confidential and must not be disclosed without the individual's documented consent, except as may be necessary to provide services to the patient or as required by law, with appropriate safeguards for confidentiality. Otherwise, information may be disclosed only in summary, statistical, or other form which does not identify particular individuals.

§ 59.12 Additional conditions.

The Secretary may, with respect to any grant, impose additional conditions prior to or at the time of any award, when in the Department's judgment these conditions are necessary to assure or protect advancement of the approved program, the interests of public health, or the proper use of grant funds.

[65 FR 41278, July 3, 2000; 65 FR 49057, Aug. 10, 2000]

Subpart B [Reserved]

Subpart C—Grants for Family Planning Service Training

AUTHORITY: Sec. 6(c), 84 Stat. 1507, 42 U.S.C. 300a–4; sec. 6(c), 84 Stat. 1507, 42 U.S.C. 300a–1.

SOURCE: 37 FR 7093, Apr. 8, 1972, unless otherwise noted.

§ 59.201 Applicability.

The regulations in this subpart are applicable to the award of grants pursuant to section 1003 of the Public Health Service Act (42 U.S.C. 300a–1) to provide the training for personnel to carry out family planning service programs described in sections 1001 and 1002 of the Public Health Service Act (42 U.S.C. 300, 300a).

§ 59.202 Definitions.

As used in this subpart:

(a) *Act* means the Public Health Service Act.

(b) *State* means one of the 50 States, the District of Columbia, Puerto Rico, Guam, the Virgin Islands, American Samoa, or the Trust Territory of the Pacific Islands.

(c) *Nonprofit* private entity means a private entity no part of the net earnings of which inures, or may lawfully inure, to the benefit of any private shareholder or individual.

(d) *Secretary* means the Secretary of Health and Human Services and any other officer or employee of the Department of Health and Human Services to whom the authority involved has been delegated.

(e) *Training* means job-specific skill development, the purpose of which is to promote and improve the delivery of family planning services.

§ 59.203 Eligibility.

(a) *Eligible applicants*. Any public or nonprofit private entity located in a State is eligible to apply for a grant under this subpart.

(b) *Eligible projects*. Grants pursuant to section 1003 of the Act and this subpart may be made to eligible applicants for the purpose of providing programs, not to exceed three months in duration, for training family planning or other health services delivery personnel in the skills, knowledge, and attitudes necessary for the effective delivery of family planning services: *Provided*, That the Secretary may in particular cases approve support of a program whose duration is longer than three months where he determines (1) that such program is consistent with the purposes of this subpart and (2) that the program's objectives cannot be accomplished within three months because of the unusually complex or specialized nature of the training to be undertaken.

[37 FR 7093, Apr. 8, 1972, as amended at 40 FR 17991, Apr. 24, 1975]

§ 59.204 Application for a grant.

(a) An application for a grant under this subpart shall be submitted to the Secretary at such time and in such form and manner as the Secretary may prescribe.[1] The application shall contain a full and adequate description of the project and of the manner in which the applicant intends to conduct the project and carry out the requirements of this subpart, and a budget and justification of the amount of grant funds requested, and such other pertinent information as the Secretary may require.

(b) The application shall be executed by an individual authorized to act for the applicant and to assume for the applicant the obligations imposed by the regulations of this subpart and any additional conditions of the grant.

(Sec. 6(c), Public Health Service Act, 84 Stat. 1506 and 1507 (42 U.S.C. 300, 300a–1, and 300a–4))

[37 FR 7093, Apr. 8, 1972, as amended at 49 FR 38116, Sept. 27, 1984]

§ 59.205 Project requirements.

An approvable application must contain each of the following unless the Secretary determines that the applicant has established good cause for its omission:

(a) Assurances that:

(1) No portion of the Federal funds will be used to train personnel for programs where abortion is a method of family planning.

(2) No portion of the Federal funds will be used to provide professional training to any student as part of his education in pursuit of an academic degree.

(3) No project personnel or trainees shall on the grounds of sex, religion, or creed be excluded from participation in, be denied the benefits of, or be subjected to discrimination under the project.

(b) Provision of a methodology to assess the particular training (e.g., skills, attitudes, or knowledge) that prospective trainees in the area to be served need to improve their delivery of family planning services.

(c) Provision of a methodology to define the objectives of the training program in light of the particular needs of trainees defined pursuant to paragraph (b) of this section.

(d) Provision of a method for development of the training curriculum and any attendant training materials and resources.

(e) Provision of a method for implementation of the needed training.

(f) Provision of an evaluation methodology, including the manner in which such methodology will be employed, to measure the achievement of the objectives of the training program.

(g) Provision of a method and criteria by which trainees will be selected.

§ 59.206 Evaluation and grant award.

(a) Within the limits of funds available for such purpose, the Secretary may award grants to assist in the establishment and operation of those projects which will in his judgment best promote the purposes of section 1003 of the Act, taking into account:

(1) The extent to which a training program will increase the delivery of services to people, particularly low-income groups, with a high percentage of unmet need for family planning services;

(2) The extent to which the training program promises to fulfill the family planning services delivery needs of the area to be served, which may include, among other things:

(i) Development of a capability within family planning service projects to provide pre- and in-service training to their own staffs;

(ii) Improvement of the family planning services delivery skills of family planning and health services personnel;

(iii) Improvement in the utilization and career development of paraprofessional and paramedical manpower in family planning services;

(iv) Expansion of family planning services, particularly in rural areas, through new or improved approaches to

[1] Applications and instructions may be obtained from the Program Director, Family Planning Services, at the Regional Office of the Department of Health and Human Services for the region in which the project is to be conducted, or the Office of Family Planning, Office of the Assistant Secretary for Health, Washington, DC 20201.

program planning and deployment of resources;

(3) The capacity of the applicant to make rapid and effective use of such assistance;

(4) The administrative and management capability and competence of the applicant;

(5) The competence of the project staff in relation to the services to be provided; and

(6) The degree to which the project plan adequately provides for the requirements set forth in § 59.205.

(b) The amount of any award shall be determined by the Secretary on the basis of his estimate of the sum necessary for all or a designated portion of direct project costs plus an additional amount for indirect costs, if any, which will be calculated by the Secretary either: (1) On the basis of his estimate of the actual indirect costs reasonably related to the project, or (2) on the basis of a percentage of all, or a portion of, the estimated direct costs of the project when there are reasonable assurances that the use of such percentage will not exceed the approximate actual indirect costs. Such award may include an estimated provisional amount for indirect costs or for designated direct costs (such as travel or supply costs) subject to upward (within the limits of available funds) as well as downward adjustments to actual costs when the amount properly expended by the grantee for provisional items has been determined by the Secretary.

(c) Allowability of costs shall be in conformance with the applicable cost principles prescribed by subpart Q of 35 CFR part 74.

(d) All grant awards shall be in writing, shall set forth the amount of funds granted and the period for which support is recommended.

(e) Neither the approval of any project nor any grant award shall commit or obligate the United States in any way to make any additional, supplemental, continuation, or other award with respect to any approved project or portion thereof. For continuation support, grantees must make separate application annually at such times and in such form as the Secretary may direct.

[37 FR 7093, Apr. 8, 1972, as amended at 38 FR 26199, Sept. 19, 1973]

§ 59.207 Payments.

The Secretary shall from time to time make payments to a grantee of all or a portion of any grant award, either in advance or by way of reimbursement for expenses incurred or to be incurred in the performance of the project to the extent he determines such payments necessary to promote prompt initiation and advancement of the approved project.

§ 59.208 Use of project funds.

(a) Any funds granted pursuant to this subpart as well as other funds to be used in performance of the approved project shall be expended solely for carrying out the approved project in accordance with the statute, the regulations of this subpart, the terms and conditions of the award, and, except as may otherwise be provided in this subpart, the applicable cost principles prescribed by subpart Q of 45 CFR part 74.

(b) Prior approval by the Secretary of revision of the budget and project plan is required whenever there is to be a significant change in the scope or nature of project activities.

(c) The Secretary may approve the payment of grant funds to trainees for:

(1) Return travel to the trainee's point of origin.

(2) Per diem during the training program, and during travel to and from the program, at the prevailing institutional or governmental rate, whichever is lower.

[37 FR 7093, Apr. 8, 1972, as amended at 38 FR 26199, Sept. 19, 1973]

§ 59.209 Civil rights.

Attention is called to the requirements of Title VI of the Civil Rights Act of 1964 (78 Stat. 252, 42 U.S.C. 2000d *et seq.*) and in particular section 601 of such Act which provides that no person in the United States shall, on the grounds of race, color, or national origin be excluded from participation in,

be denied the benefits of, or be subjected to discrimination under any program or activity receiving Federal financial assistance. A regulation impelmenting such title VI, which applies to grants made under this part, has been issued by the Secretary of Health and Human Services with the approval of the President (45 CFR part 80).

§ 59.210 Inventions or discoveries.

Any grant award pursuant to § 59.206 is subject to the regulations of the Department of Health and Human Services as set forth in 45 CFR parts 6 and 8, as amended. Such regulations shall apply to any activity for which grant funds are in fact used whether within the scope of the project as approved or otherwise. Appropriate measures shall be taken by the grantee and by the Secretary to assure that no contracts, assignments or other arrangements inconsistent with the grant obligation are continued or entered into and that all personnel involved in the supported activity are aware of and comply with such obligations. Laboratory notes, related technical data, and information pertaining to inventions and discoveries shall be maintained for such periods, and filed with or otherwise made available to the Secretary, or those he may designate at such times and in such manner, as he may determine necessary to carry out such Department regulations.

§ 59.211 Publications and copyright.

Except as may otherwise be provided under the terms and conditions of the award, the grantee may copyright without prior approval any publications, films or similar materials developed or resulting from a project supported by a grant under this part, subject, however, to a royalty-free, nonexclusive, and irrevocable license or right in the Government to reproduce, translate, publish, use, disseminate, and dispose of such materials and to authorize others to do so.

§ 59.212 Grantee accountability.

(a) *Accounting for grant award payments.* All payments made by the Secretary shall be recorded by the grantee in accounting records separate from the records of all other grant funds, including funds derived from other grant awards. With respect to each approved project the grantee shall account for the sum total of all amounts paid by presenting or otherwise making available evidence satisfactory to the Secretary of expenditures for direct and indirect costs meeting the requirements of this part: *Provided, however,* That when the amount awarded for indirect costs was based on a predetermined fixed-percentage of estimated direct costs, the amount allowed for indirect costs shall be computed on the basis of such predetermined fixed-percentage rates applied to the total, or a selected element thereof, of the reimbursable direct costs incurred.

(b) [Reserved]

(c) *Accounting for grant-related income*—(1) *Interest.* Pursuant to section 203 of the Intergovernmental Cooperation Act of 1968 (42 U.S.C. 4213), a State will not be held accountable for interest earned on grant funds, pending their disbursement for grant purposes. A State, as defined in section 102 of the Intergovernmental Cooperation Act, means any one of the several States, the District of Columbia, Puerto Rico, any territory or possession of the United States, or any agency or instrumentality of a State, but does not include the governments of the political subdivisions of the State. All grantees other than a State, as defined in this subsection, must return all interest earned on grant funds to the Federal Government.

(d) *Grant closeout*—(1) *Date of final accounting.* A grantee shall render, with respect to each approved project, a full account, as provided herein, as of the date of the termination of grant support. The Secretary may require other special and periodic accounting.

(2) *Final settlement.* There shall be payable to the Federal Government as final settlement with respect to each approved project the total sum of:

(i) Any amount not accounted for pursuant to paragraph (a) of this section;

(ii) Any credits for earned interest pursuant to paragraph (c)(1) of this section;

(iii) Any other amounts due pursuant to subparts F, M, and O of 45 CFR part 74.

Such total sum shall constitute a debt owed by the grantee to the Federal Government and shall be recovered from the grantee or its successors or assignees by setoff or other action as provided by law.

[36 FR 18465, Sept. 15, 1971, as amended at 38 FR 26199, Sept. 19, 1973]

§ 59.213 [Reserved]

§ 59.214 Additional conditions.

The Secretary may with respect to any grant award impose additional conditions prior to or at the time of any award when in his judgment such conditions are necessary to assure or protect advancement of the approved project, the interests of public health, or the conservation of grant funds.

§ 59.215 Applicability of 45 CFR part 74.

The provisions of 45 CFR part 74, establishing uniform administrative requirements and cost principles, shall apply to all grants under this subpart to State and local governments as those terms are defined in subpart A of that part 74. The relevant provisions of the following subparts of part 74 shall also apply to grants to all other grantee organizations under this subpart.

45 CFR PART 74

Subpart:
A General.
B Cash Depositories.
C Bonding and Insurance.
D Retention and Custodial Requirements for Records.
F Grant-Related Income.
G Matching and Cost Sharing.
K Grant Payment Requirements.
L Budget Revision Procedures.
M Grant Closeout, Suspension, and Termination.
O Property.
Q Cost Principles.

[38 FR 26199, Sept. 19, 1973]

PART 59a—NATIONAL LIBRARY OF MEDICINE GRANTS

Subpart A—Grants for Establishing, Expanding, and Improving Basic Resources

Sec.
59a.1 Programs to which these regulations apply.
59a.2 Definitions.
59a.3 Who is eligible for a grant?
59a.4 How are grant applications evaluated?
59a.5 Awards.
59a.6 How may funds or materials be used?
59a.7 Other HHS regulations that apply.

Subpart B—Establishment of Regional Medical Libraries

59a.11 Programs to which these regulations apply.
59a.12 Definitions.
59a.13 Who is eligible for a grant?
59a.14 How to apply.
59a.15 Awards.
59a.16 What other conditions apply?
59a.17 Other HHS regulations that apply.

SOURCE: 56 FR 29189, June 26, 1991, unless otherwise noted.

Subpart A—Grants for Establishing, Expanding, and Improving Basic Resources

AUTHORITY: 42 U.S.C. 286b–2, 286b–5.

§ 59a.1 Programs to which these regulations apply.

(a) The regulations of this subpart apply to grants of funds, materials, or both, for establishing, expanding, and improving basic medical library resources as authorized by section 474 of the Act (42 U.S.C. 286b–5).

(b) This subpart also applies to cooperative agreements awarded for this purpose. In these circumstances, references to ''grant(s)'' shall include ''cooperative agreements(s).''

§ 59a.2 Definitions.

Undefined terms have the same meaning as provided in the Act. As used in this subpart:

Act means the Public Health Service Act, as amended (42 U.S.C. 201 *et seq.*).

Project period—See § 59a.5(c).

Related instrumentality means a public or private institution, organization, or agency, other than a medical library,

whose primary function is the acquisition, preservation, dissemination, and/or processing of information relating to the health sciences.

Secretary means the Secretary of Health and Human Services and any other official of the Department of Health and Human Services to whom the authority involved is delegated.

§59a.3 Who is eligible for a grant?

Except as otherwise prohibited by law, any public or private nonprofit institution, organization, or agency authorized or qualified to carry on the functions of a medical library, and any public or private related instrumentality, is eligible for a grant under this subpart.

§59a.4 How are grant applications evaluated?

The Secretary shall evaluate grant applications using the officers and employees, and experts, consultants, or groups engaged by the Secretary for that purpose. The Secretary's evaluation shall consider the scope of library or related services for the population and purposes served by the applicant. This evaluation shall include consideration of the following information which must be set forth in the grant application and such other information the Secretary considers pertinent:

(a) Evidence of the applicant's efficiency in providing services,

(b) Amount of available equipment and other resources on hand to satisfy the needs of the area served by the facility,

(c) Extent of coordination with other libraries and related facilities, and

(d) Potential for testing or demonstration of new or improved techniques in health-sciences informational services.

(Approved by the Office of Management and Budget under control number 0925–0276)

§59a.5 Awards.

(a) *General*. Within the limits of funds available, the Secretary may award grants to those applicants whose proposals for establishments, expansion, or improvement will, in the Secretary's judgment, best promote the purposes of section 474 of the Act (42 U.S.C. 286b–5).

(b) *Determination of award amount*. An Award may not exceed $1,000,000 or other amount established by law for any fiscal year.

(1) The scope of medical-library or related services provided by the applicant for the population and purposes it serves considering:

(i) The number of graduate and undergraduate students, and physicians and other practitioners in health-related sciences making use of the applicant's library resources;

(ii) The type and availability of library support staff;

(iii) The type, size, and qualifications of the faculty of any school with which the applicant is affiliated;

(iv) The staff of any hospitals or clinics with which the applicant's library is affiliated;

(v) The geographic area served and, within that area, the medical-library or related services otherwise available; and

(2) The amount adequate to insure continuing financial support from non-Federal sources of the applicant's proposed activity during and after the period of award. The Secretary shall consider the level of non-Federal support for the proposed activity for periods prior to the fiscal year in which a grant is made. The Secretary shall require the applicant's assurance that non-Federal support will not be diminished as a result of the award and that adequate support for this activity will be continued during and after the period of Federal assistance.

(c) *Project period*. (1) the notice of grant award specifies how long the Secretary intends to support the project without requiring the project to recompete for funds. This period, called the project period, will usually be for one to five years.

(2) Generally, the grant will initially be for one year at a time and subsequent continuation awards will also be for one year at a time. A grantee must submit a separate application to have the support continued for each subsequent year. Decisions regarding continuation awards and the funding level of these awards will be made after consideration of such factors as the grantee's progress and management practices, and the availability of funds. In

all cases, continuation awards require a determination by the Secretary that continued funding is in the best interest of the Federal Government.

(3) Neither the approval of any application nor the award of any grant commits or obligates the Federal Government in any way to make any additional, supplemental, continuation, or other award for any approved application or portion of an approved application.

[56 FR 29189, June 26, 1991, as amended at 59 FR 59168, Nov. 16, 1994]

§ 59a.6 How may funds or materials be used?

The grantee shall expend funds or use materials provided by a grant under this subpart solely for the purposes for which the funds or materials were granted, in accordance with the pertinent provisions of the approved application and budget, the regulations of this subpart, the terms and conditions of the award, and the applicable cost principles in subpart Q of 45 CFR part 74.

§ 59a.7 Other HHS regulations that apply.

Several other regulations apply to grants under this subpart. These include, but are not necessarily limited to:

42 CFR part 50, subpart D—Public Health Service grant appeals procedure
45 CFR parts 6 and 8—Inventions and patents
45 CFR part 16—Procedures of the Departmental Grant Appeals Board
45 CFR part 74—Administration of grants
45 CFR part 75—Informal grant appeals procedures
45 CFR part 76 subparts A–F—Government-wide debarment and suspension (nonprocurement) and requirements for drug-free workplace (grants)
45 CFR part 80—Nondiscrimination under programs receiving Federal assistance through the Department of Health and Human Services—effectuation of title VI of the Civil Rights Act of 1964
45 CFR part 81—Practice and procedure for hearings under part 80 of this title
45 CFR part 84—Nondiscrimination on the basis of handicap in programs and activities receiving or benefiting from Federal financial assistance
45 CFR part 86—Nondiscrimination on the basis of sex in education programs and activities receiving or benefiting from Federal financial assistance
45 CFR part 91—Nondiscrimination on the basis of age in HHS programs or activities receiving Federal financial assistance
45 CFR part 92—Uniform administrative requirements for grants and cooperative agreements to state and local governments

Subpart B—Establishment of Regional Medical Libraries

AUTHORITY: 42 U.S.C. 286b–2, 286b–6.

§ 59a.11 Programs to which these regulations apply.

(a) This subpart applies to grants made under section 475 of the Act (42 U.S.C. 286b–6). Grants are awarded to medical libraries to enable them to serve as regional medical libraries for their geographic areas. The purpose of the program is to develop a national system of regional medical libraries, each of which would have sufficient facilities to supplement the services of other medical libraries in its region.

(b) The purpose of the program may also be supported by contracts. Since the primary purpose of these contracts is to assist regional libraries and is not for the purpose of acquiring supplies or services for use of the Federal Government, the provisions of the Federal Acquisition Regulation (48 CFR chapter 1) do not apply. Any contract awarded pursuant to section 475 of the Act shall be subject to the applicable provisions of this subpart.

§ 59a.12 Definitions.

Underfined terms have the same meaning as provided in the Act.

As used in this subpart:

Act means the Public Health Service Act, as amended (42 U.S.C. 201 *et seq.*).

Annual operating expenses means the average annual operating expenses for the actual years of operation or an estimated amount based on the expenses of libraries or institutions of similar size and function.

Board means the Board of Regents of the National Library of Medicine established by section 466 of the Act (42 U.S.C. 286a).

Geographic area means an area that forms an academically and professionally integrated region. Factors

considered are location and extent of communication facilities and systems, presence and distribution of educational and medical and health facilities and programs and other activities which, in the Secretary's opinion, justify the establishment and operation of a regional medical library.

Modify and increase means the use of Federal funds or materials to supplement rather than supplant non-Federal funds available for library resources and services.

Project period—See § 59a.15(b).

Secretary means the Secretary of Health and Human Services and any other official of the Department of Health and Human Services to whom the authority involved is delegated.

§ 59a.13 Who is eligible for a grant?

Except as otherwise prohibited by law, any public or private nonprofit organization which is authorized and qualified to operate a medical library is eligible for a grant under this subpart.

§ 59a.14 How to apply.

In addition to any other pertinent information which the Secretary may require, the applicant shall submit a grant application containing a detailed description of a program to provide health-sciences informational services for the geographic area in which it is located. The description shall include:

(a) The need for services;

(b) The adequacy of the applicant's existing or proposed facilities and resources to attain the purposes stated in the application;

(c) The size and nature of the population to be served;

(d) The region to be served;

(e) Cooperative arrangements in effect, or proposed, with other qualified organizations; and

(f) The justification for the funds requested.

(Approved by the Office of Management and Budget under control number 0925–0276)

§ 59a.15 Awards.

(a) *General*. The Secretary, with the advice of the Board in each case, shall award grants to those applicants whose arrangements and proposed services will, in the Secretary's judgment, have the greatest potential for fulfilling the need for a regional medical library. The Secretary, in determining the priority assigned an applicant, must consider:

(1) The adequacy of the applicant's library in terms of collections, personnel, equipment, and other facilities; and

(2) The size and nature of the population to be served in the applicant's region.

(b) *Project period*. (1) The notice of grant award specifies how long the Secretary intends to support the project without requiring the project to recompete for funds. This period, called the project period, will usually be for one to five years.

(2) Generally, the grant will initially be for one year and subsequent continuation awards will also be for one year at a time. A grantee must submit a separate application to have the support continued for each subsequent year. Decisions regarding continuation awards and the funding level of these awards will be made after consideration of such factors as the grantee's progress and management practices, and the availability of funds. In all cases, continuation awards require a determination by the Secretary that continued funding is in the best interest of the Federal Government.

(3) Neither the approval of any application nor the award of any grant commits or obligates the Federal Government in any way to make any additional, supplemental, continuation, or other award for any approved application or portion of an approved application.

§ 59a.16 What other conditions apply?

Although the Secretary may approve exceptions which are consistent with program purposes, in addition to other terms, conditions, and assurances required by law, each grantee must meet the following requirements:

(a) *Use of funds*. Any funds granted under this subpart shall be expended solely for the purpose for which the funds were granted in accordance with the approved application and budget, the regulations of this subpart, the terms and conditions of the award, and

the applicable cost principles in subpart Q of 45 CFR part 74.

(b) *Library resources*—(1) *Provision of services*. The grantee shall modify and increase its library resources to provide supportive services to other health-sciences informational activities.

(2) *Access to and fees for services*. The grantee shall provide free loan services to qualified users or, in lieu of loans, make available photoduplicated or facsimile copies of biomedical materials which qualified requesters may retain. Reasonable fees may be charged for copies or other services (other than free loan services) provided by a grantee under this subpart: *Provided*, That equal access to the health-information resources of the region or of the national network is assured. These fees shall be designed to recover expenses. The grantee's access policies shall determine the qualifications of individuals or organizations for access to the services provided under the grant, so long as those policies are consistent with the mandatory service undertakings of the program. The Secretary may review the grantee's access policies to assure compliance with this requirement.

(Approved by the Office of Management and Budget under control number 0925–0276)

§ 59a.17 Other HHS regulations that apply.

Several other regulations apply to grants under this subpart. These include, but are not necessarily limited to:

42 CFR part 50, subpart A—Responsibilities of PHS awardee and applicant institutions for dealing with and reporting possible misconduct in science
42 CFR part 50, subpart D—Public Health Service grant appeals procedure
45 CFR parts 6 and 8—Inventions and patents
45 CFR part 16—Procedures of the Departmental Grant Appeals Board
45 CFR part 74—Administration of grants
45 CFR part 75—Informal grant appeals procedures
45 CFR part 76, subparts A–F—Governmentwide debarment and suspension (nonprocurement) and requirements for drug-free workplace (grants)
45 CFR part 80—Nondiscrimination under programs receiving Federal assistance through the Department of Health and Human Services—effectuation of title VI of the Civil Rights Act of 1964
45 CFR part 81—Practice and procedure for hearings under part 80 of this title
45 CFR part 84—Nondiscrimination on the basis of handicap in programs and activities receiving or benefiting from Federal financial assistance
45 CFR part 86—Nondiscrimination on the basis of sex in education programs and activities receiving or benefiting from Federal financial assistance
45 CFR part 91—Nondiscrimination on the basis of age in HHS programs or activities receiving Federal financial assistance
45 CFR part 92—Uniform administrative requirements for grants and cooperative agreements to state and local governments

PART 60—HEALTH EDUCATION ASSISTANCE LOAN PROGRAM

Subpart A—General Program Description

Sec.
60.1 What is the HEAL program?

Subpart B—The Borrower

60.5 Who is an eligible student borrower?
60.6 Who is an eligible nonstudent borrower?
60.7 The loan application process.
60.8 What are the borrower's major rights and responsibilities?

Subpart C—The Loan

60.10 How much can be borrowed?
60.11 Terms of repayment.
60.12 Deferment.
60.13 Interest.
60.14 The insurance premium.
60.15 Other charges to the borrower.
60.16 Power of attorney.
60.17 Security and endorsement.
60.18 Consolidation of HEAL loans.
60.19 Forms.
60.20 The Secretary's collection efforts after payment of a default claim.
60.21 Refunds.

Subpart D—The Lender and Holder

60.30 Which organizations are eligible to apply to be HEAL lenders and holders?
60.31 The application to be a HEAL lender or holder.
60.32 The HEAL lender or holder insurance contract.
60.33 Making a HEAL loan.
60.34 HEAL loan account servicing.
60.35 HEAL loan collection.
60.36 Consequence of using an agent.
60.37 Forbearance.
60.38 Assignment of a HEAL loan.
60.39 Death and disability claims.

60.40 Procedures for filing claims.
60.41 Determination of amount of loss on claims.
60.42 Records, reports, inspection, and audit requirements for HEAL lenders and holders.
60.43 Limitation, suspension, or termination of the eligibility of a HEAL lender or holder.

Subpart E—The School

60.50 Which schools are eligible to be HEAL schools?
60.51 The student loan application.
60.52 The student's loan check.
60.53 Notification to lender or holder of change in enrollment status.
60.54 Payment of refunds by schools.
60.55 Administrative and fiscal procedures.
60.56 Records.
60.57 Reports.
60.58 Federal access to school records.
60.59 Records and Federal access after a school is no longer a HEAL school.
60.60 Limitation, suspension, or termination of the eligibility of a HEAL school.
60.61 Responsibilities of a HEAL school.

AUTHORITY: Sec. 215, of the Public Health Service Act, 58 Stat. 690, as amended, 63 Stat. 35 (42 U.S.C. 216); secs. 727–739A of the Public Health Service Act, 90 Stat. 2243, as amended, 93 Stat. 582, 99 Stat. 529–532, 102 Stat. 3122–3125 (42 U.S.C. 294–294*l*–1); renumbered as secs. 701–720, as amended by 106 Stat. 1994–2011 (42 U.S.C. 292–292p).

SOURCE: 48 FR 38988, Aug. 26, 1983, unless otherwise noted.

Subpart A—General Program Description

§60.1 What is the HEAL program?

(a) The Health Education Assistance Loan (HEAL) program is a program of Federal insurance of educational loans to graduate students in the fields of medicine, osteopathic medicine, dentistry, veterinary medicine, optometry, podiatric medicine, pharmacy, public health, chiropractic, health administration and clinical psychology. The basic purpose of the program is to encourage lenders to make loans to students in these fields who desire to borrow money to pay for their educational costs. In addition, certain nonstudents (such as doctors serving as interns or residents) can borrow in order to pay the current interest charges accruing on earlier HEAL loans. By taking a HEAL loan, the borrower is obligated to repay the lender or holder the full amount of the money borrowed, plus all interest which accrues on the loan.

(b) HEAL loans may be made by schools, banks, credit unions, State agencies, and other institutions eligible as lenders under §60.30. HEAL school eligibility is described in §60.50.

(c) The Secretary insures each lender or holder for the losses of principal and interest it may incur in the event that a borrower dies; becomes totally and permanently disabled; files for bankruptcy under chapter 11 or 13 of the Bankruptcy Act; files for bankruptcy under chapter 7 of the Bankruptcy Act and files a compliant to determine the dischargeability of the HEAL loan; or defaults on his or her loan. In these instances, if the lender or holder has complied with all HEAL statutes and regulations, and with the lender's or holder's insurance contract, and the Secretary pays the amount of the loss to the lender or holder, the borrower's loan is then assigned to the Secretary. Only at that time, the United States Government becomes the borrower's direct creditor and will actively pursue the borrower for repayment of the debt, including reporting the borrower's default on the loan to consumer credit reporting agencies or to the Internal Revenue Service for purposes of locating such taxpayer or for income tax refund offset, and referral to the Department of Justice for litigation.

(d) Any person who knowingly makes a false statement or misrepresentation in a HEAL loan transaction, bribes or attempts to bribe a Federal official, fraudulently obtains a HEAL loan, or commits any other illegal action in connection with a HEAL loan is subject to possible fine and imprisonment under Federal statute.

(e) *Calculating time periods*. In counting the number of days allowed to comply with any provisions of these regulations, Saturdays, Sundays, and holidays are to be included. However, if a due date falls on a Saturday, Sunday, or Federal holiday, the due date is the next Federal work day.

[48 FR 38988, Aug. 26, 1983, as amended at 52 FR 745, Jan. 8, 1987; 56 FR 42700, Aug. 29, 1991; 57 FR 28793, June 29, 1992]

Subpart B—The Borrower

§ 60.5 Who is an eligible student borrower?

To receive a HEAL loan, a student must satisfy the following requirements:

(a) He or she must be a citizen, national, or lawful permanent resident of the United States, permanent resident of the Trust Territory of the Pacific Islands (the Republic of Palau), the Republic of the Marshall Islands, the Federated States of Micronesia, the Commonwealth of the Northern Mariana Islands, or American Samoa, or lawful permanent resident of the Commonwealth of Puerto Rico, the Virgin Islands or Guam;

(b) He or she must be enrolled or accepted for enrollment at a HEAL school in a course of study that leads to one of the following degrees:

Doctor of Medicine
Doctor of Osteopathic Medicine
Doctor of Dentistry or equivalent degree
Doctor of Veterinary Medicine or equivalent degree
Doctor of Optometry or equivalent degree
Doctor of Podiatric Medicine or equivalent degree
Bachelor or Master of Science in Pharmacy or equivalent degree
Graduate or equivalent degree in Public Health
Doctor of Chiropractic or equivalent degree
Doctoral degree in Clinical Psychology
Masters or doctoral degree in Health Administration

(c) He or she must be carrying or plan to carry, during the period for which the loan is intended, the normal work load of a full-time student, as determined by the school. The student's work load may include any combination of courses, work experience, research or special studies that the school considers sufficient to classify the student as full time.

(d) If currently enrolled in school, he or she must be in good standing, as determined by the school.

(e)(1) In the case of a pharmacy student, he or she must have satisfactorily completed 3 years of training toward the pharmacy degree. These 3 years of training may have been taken at the pharmacy school or at a different school whose credits are accepted on transfer by the pharmacy school.

(2) The Doctor of Pharmacy degree is considered to be an equivalent degree if it is taken in a school that does not require the Bachelor or Master of Science in pharmacy as a prerequisite for the Doctor of Pharmacy degree.

(f) In the case of a medical, dental or osteopathic student enrolled in a 6-year program that the student may enter directly from secondary school, the student must be enrolled in the last 4 years of the program.

(g) He or she must agree that all funds received under the proposed loan will be used solely for tuition, other reasonable educational expenses, including fees, books, supplies and equipment, and laboratory expenses, reasonable living expenses, reasonable transportation costs (only to the extent that they are directly related to the borrower's education), and the HEAL insurance premium.

(h) He or she must require the loan to pursue the course of study at the school. This determination of the maximum amount of the loan will be made by the school, applying the considerations in § 60.51(f).

(i) If required under section 3 of the Military Selective Service Act to present himself for and submit to registration under such section, he must have presented himself and submitted to registration under such section.

[48 FR 38988, Aug. 26, 1983, as amended at 51 FR 30644, Aug. 28, 1986; 52 FR 745, Jan. 8, 1987; 57 FR 28793, June 29, 1992]

§ 60.6 Who is an eligible nonstudent borrower?

To receive a HEAL loan, a person who is not a student must satisfy all of the following requirements:

(a) He or she must have received a HEAL loan prior to August 13, 1981, for which he or she is required to make payments of interest, but not principal, during the period for which the new loan is intended. This may be the grace period or a period of internship, residency or deferment.

(b) He or she must continue to meet the citizenship, nationality, or residency qualifications required of student borrowers.

(c) He or she must agree that all funds received under the proposed loan

will be used solely for payment of currently accruing interest on HEAL loans and the HEAL insurance premium.

(d) If required under section 3 of the Military Selective Service Act to present himself for and submit to registration under such section, he must have presented himself and submitted to registration under such section.

[48 FR 38988, Aug. 26, 1983, as amended at 51 FR 30644, Aug. 28, 1986]

§ 60.7 The loan application process.

(a)(1)(i) A student seeking a HEAL loan applies to a participating lender for a HEAL loan by submitting an application form supplied by the school.

(ii) The applicant must fill out the applicant sections of the form completely and accurately.

(2) The student applicant must be informed of the Federal debt collection policies and procedures in accordance with the Department's Claims Collection Regulation (45 CFR part 30) prior to the student receiving the loan. The applicant must sign a certification statement attesting that the applicant has been notified of the actions the Federal Government can take in the event that the applicant fails to meet the scheduled payments. This signed statement must be maintained by the school and the lender or holder as part of the borrower's official record.

(3) A student applicant must have his or her school complete a portion of the application providing information relating to:

(i) The applicant's eligibility for the loan.

(ii) The cost of his or her education; and

(iii) The total financial resources that are actually available to the applicant for his or her costs of education for the period covered by the proposed HEAL loan, as determined in accordance with § 60.51(f), and other student aid that the applicant has received or will receive for the period covered by the proposed HEAL loan.

(4) The student applicant must certify on the application that the information provided reflects the applicant's total financial resources actually available for his or her costs of education for the period covered by the proposed HEAL loan and the applicant's total indebtedness, and that the applicant has no other financial resources that are available to the applicant or that the applicant will receive for the period covered by the proposed HEAL loan.

(5) A student applicant must certify on the application that if required under section 3 of the Military Selective Service Act to present himself for and submit to registration under such section, he has presented himself and submitted to registration under such section.

(b) The applicant pursuing a full-time course of study at an institution of higher education that is a ''participating school'' in the Guaranteed Student Loan Program but is not pursuing a course of study listed in § 60.5(b), applies for a HEAL loan as a nonstudent under paragraph (c) of this section.

(c)(1)(i) A nonstudent seeking a HEAL loan applies to a participating lender for a HEAL loan by submitting an application form supplied by the lender.

(ii) The applicant must fill out the applicant sections of the form completely and accurately.

(2) The nonstudent applicant must be informed of the Federal debt collection policies and procedures in accordance with the Department's Claims Collection Regulation (45 CFR part 30) prior to the nonstudent receiving the loan. The applicant must sign a certification statement attesting that the applicant has been notified of the actions the Federal Government can take in the event that the applicant fails to meet the scheduled payments. This signed statement will be maintained by the lender or holder as part of the borrower's official record.

(3) A nonstudent applicant must have his or her employer or institution, whichever is relevant, certify on the application that the applicant is:

(i) Enrolled as a full-time student in an eligible school, as described in § 60.12;

(ii) A participant in an accredited internship or residency program, as described in § 60.11(a);

(iii) A member of the Armed Forces of the United States;

(iv) A Peace Corps volunteer;

(v) A member of the National Health Service Corps; or

(vi) A full-time VISTA volunteer under Title I of the Domestic Volunteer Service Act of 1973.

(4) The nonstudent applicant seeking a HEAL loan during the grace period applies to the lender directly.

(5) A nonstudent applicant must certify on the application that if required under section 3 of the Military Selective Service Act to present himself for and submit to registration under such section, he has presented himself and submitted to registration under such section.

(6) The nonstudent applicant must certify on the application that the information provided reflects the applicant's total financial resources and indebtedness.

(Approved by the Office of Management and Budget under control numbers 0915–0038 and 0915–0108)

[48 FR 38988, Aug. 26, 1983, as amended at 51 FR 30644, Aug. 28, 1986; 52 FR 746, Jan. 8, 1987; 57 FR 28794, June 29, 1992]

§ 60.8 What are the borrower's major rights and responsibilities?

(a) *The borrower's rights.* (1) Once the terms of the HEAL loan have been established, the lender or holder may not change them without the borrower's consent.

(2) The lender must provide the borrower with a copy of the completed promissory note when the loan is made. The lender or holder must return the original note to the borrower when the loan is paid in full.

(3) A lender must disburse HEAL loan proceeds as described in § 60.33(f).

(4) The lender or holder must provide the borrower with a copy of the repayment schedule before repayment begins.

(5) If the loan is sold from one lender or holder to another lender or holder, or if the loan is serviced by a party other than the lender or holder, the buyer must notify the borrower within 30 days of the transaction.

(6) The borrower does not have to begin repayment until 9 full months after leaving school or an accredited internship or residency program as described in § 60.11.

(7) The borrower is entitled to deferment from repayment of the principal and interest installments during periods described in § 60.12.

(8) The borrower may prepay the whole or any portion of the loan at any time without penalty.

(9) The lender or holder must allow the borrower to repay a HEAL loan according to a graduated repayment schedule.

(10) The borrower's total loan obligation is cancelled in the event of death or total and permanent disability.

(11) To assist the borrower in avoiding default, the lender or holder may grant the borrower forbearance. Forbearance, including circumstances in which the lender or holder must grant forbearance, is more fully described in § 60.37.

(12) Any borrower who received a fixed interest rate HEAL loan in excess of 12 percent per year may enter into an agreement with the lender which made this loan for the reissuance of the loan in accordance with section 739A of the Public Health Service Act.

(b) *The borrower's responsibilities.* (1) The borrower must pay any insurance premium that the lender may require as more fully described in § 60.14.

(2) The borrower must pay all interest charges on the loan as required by the lender or holder.

(3) The borrower must immediately notify the lender or holder in writing in the event of:

(i) Change of address;

(ii) Change of name;

(iii) Failure to enroll in a HEAL school for the period for which the loan is intended;

(iv) Transfer to another school;

(v) Withdrawal from a HEAL school or change in status to less than full-time attendance at a HEAL school;

(vi) Graduation;

(vii) Failure to enter into or interruption in an internship or residency program; or

(viii) Change of status that authorizes deferment.

(4) The borrower must repay the loan in accordance with the repayment schedule.

(5) A borrower may not have a HEAL loan discharged in bankruptcy during

the first 5 years of the repayment period. This prohibition against the discharge of a HEAL loan applies to bankruptcy under *any* chapter of the Bankruptcy Act, including Chapter 13. A borrower may have a HEAL loan discharged in bankruptcy after the first 5 years of the repayment period only upon a finding by the Bankruptcy Court that the non-discharge of such debt would be unconscionable and upon the condition that the Secretary shall not have waived his or her rights to reduce any Federal reimbursements or Federal payments for health services under any Federal law in amounts up to the balance of the loan.

(6) If the borrower fails to make payments on the loan on time, the total amount to be repaid by the borrower may be increased by additional interest, late charges, attorney's fees, court costs, and other collection charges. In addition, the Secretary may offset amounts attributable to an unpaid loan from reimbursements or payment for health services provided under any Federal law to a defaulted borrower practicing his or her profession.

(Approved by the Office of Management and Budget under control number 0915–0108)

[48 FR 38988, Aug. 26, 1983, as amended at 52 FR 746, Jan. 8, 1987; 57 FR 28794, June 29, 1992]

Subpart C—The Loan

§ 60.10 How much can be borrowed?

(a) *Student borrower.* An eligible student may borrow an amount to be used solely for expenses, as described in § 60.5(g), incurred or to be incurred over a period of up to an academic year and disbursed in accordance with § 60.33(f). The maximum amount he or she may receive for that period shall be determined by the school in accordance with § 60.51(f) within the following limitations:

(1) A student enrolled in a school of medicine, osteopathic medicine, dentistry, veterinary medicine, optometry or podiatric medicine may borrow up to $80,000 under this part. The amount received may not exceed $20,000 in any academic year.

(2) A student enrolled in a school of public health, pharmacy, chiropractic, or a graduate program in health administration, clinical psychology, or allied health may borrow up to $50,000 under this part. The amount received may not exceed $12,500 per academic year.

(3) For purposes of this paragraph, an academic year means the traditional approximately 9-month September-to-June annual session. For the purpose of computing academic year equivalents for students who, during a 12-month period, attend for a longer period than the traditional academic year, the academic year will be considered to be 9 months in length.

(4) The student's estimated cost of attendance shall not exceed the estimated cost of attendance of all students in like circumstances pursuing a similar curriculum at that school.

(b) *Non-student borrower.* An eligible nonstudent may borrow amounts under this authority with the following restrictions:

(1) In no case may an eligible nonstudent borrower receive a loan that is greater than the sum of the HEAL insurance premium plus the interest that is expected to accrue and must be paid on the borrower's HEAL loans during the period for which the new loan is intended.

(2) An eligible nonstudent in the field of medicine, ostepathic medicine, dentistry, veterinary medicine, optometry, or podiatric medicine may borrow up to $80,000 under this part including loans obtained while the borrower was a student. The loan amount may not exceed $20,000 in any 12-month period.

(3) An eligible nonstudent in the field of pharmacy, public health, chiropractic, health administration, or clinical psychology may borrow up to $50,000 under this part including loans obtained while the borrower was a student. The loan amount received under this part may not exceed $12,500 in any 12-month period.

[48 FR 38988, Aug. 26, 1983, as amended at 51 FR 30644, Aug. 28, 1986; 52 FR 746, Jan. 8, 1987; 57 FR 28794, June 29, 1992]

§ 60.11 Terms of repayment.

(a) *Commencement of repayment.* (1) The borrower's repayment period must begin the first day of the 10th month after the month he or she ceases to be a full-time student at a HEAL school.

The 9-month period before the repayment period begins is popularly called the ''grace period.''

(i) *Postponement for internship or residency program.* However, if the borrower becomes an intern or resident in an accredited program within 9 full months after leaving school, then the borrower's repayment period must begin the first day of the 10th month after the month he or she ceases to be an intern or resident. For a borrower who receives his or her first HEAL loan on or after October 22, 1985, this postponement of the beginning of the repayment period for participation in an internship or residency program is limited to 4 years.

(ii) *Postponement for fellowship training or educational activity.* For any HEAL loan received on or after October 22, 1985, if the borrower becomes an intern or resident in an accredited program within 9 full months after leaving school, and subsequently enters into a fellowship training program or an educational activity, as described in § 60.12(b)(1) and (2), within 9 months after the completion of the accredited internship or residency program or prior to the completion of such program, the borrower's repayment period begins on the first day of the 10th month after the month he or she ceases to be a participant in the fellowship training program or educational activity. Postponement of the commencement of the repayment period for either activity is limited to 2 years.

(iii) *Non-student borrower.* If a nonstudent borrower obtains another HEAL loan during the grace period or period of internship, residency, or deferment (as defined in § 60.12), the borrower must begin to repay this loan when repayment on the borrower's other HEAL loans begins or resumes.

(2) An accredited internship or residency program must be approved by one of the following accrediting agencies:

(i) Accreditation Council for Graduate Medical Education.

(ii) Council on Optometric Education.

(iii) Commission on Accreditation of Dental and Dental Auxiliary Programs.

(iv) American Osteopathic Association.

(v) Council on Podiatry Education.

(vi) American Council on Pharmaceutical Education.

(vii) Council on Education for Public Health.

(viii) American College of Veterinary Surgeons.

(ix) Council on Chiropractic Education.

(b) *Length of repayment period.* In general, a lender or holder must allow a borrower at least 10 years, but not more than 25 years, to repay a loan calculated from the beginning of the repayment period. A borrower must fully repay a loan within 33 years from the date that the loan is made.

(1) For a HEAL borrower who received any HEAL loan prior to October 22, 1985, periods of deferment (as described in § 60.12) are not included when calculating the 10 to 25 or 33 year limitations.

(2) For a borrower who receives his or her first HEAL loan on or after October 22, 1985, periods of deferment (as described in § 60.12) are included when calculating the 33 year limitation, but are not included when calculating the 10 to 25 year limitation.

(c) *Prepayment.* The borrower may prepay the whole or any part of the loan at any time without penalty.

(d) *Minimum annual payment.* During each year of repayment, a borrower's payments to all holders of his or her HEAL loans must total the interest that accrues during the year on all of the loans, unless the borrower, in the promissory note or other written agreement, agrees to make payments during any year or any repayment period in a lesser amount.

(e) *Repayment schedule agreement.* At least 30 and not more than 60 days before the commencement of the repayment period, a borrower must contact the holder of the loan to establish the precise terms of repayment. The borrower may select a monthly repayment schedule with substantially equal installment payments or a monthly repayment schedule with graduated installment payments that increase in amount over the repayment period. If the borrower does not contact the lender or holder and does not respond to contacts from the lender or holder, the lender or holder may establish a

monthly repayment schedule with substantially equal installment payments, subject to the terms of the borrower's HEAL note.

(f) *Supplemental repayment agreement.* (1) A lender or holder and a borrower may enter into an agreement supplementing the regular repayment schedule agreement. Under a supplemental repayment agreement, the lender or holder agrees to consider that the borrower has met the terms of the regular repayment schedule as long as the borrower makes payments in accordance with the supplemental schedule.

(2) The purpose of a supplemental repayment agreement is to permit a lender or holder, at its option, to offer a borrower a repayment schedule based on other than equal or graduated payments. (For example, a supplemental repayment agreement may base the amount of the borrower's payments on his or her income.)

(3) The supplemental schedule must contain terms which, according to the Secretary, do not unduly burden the borrower and do not extend the Secretary's insurance liability beyond the number of years specified in paragraph (b) of this section. The supplemental schedule must be approved by the Secretary prior to the start of repayment.

(4) The lender or holder may establish a supplemental repayment agreement over the borrower's objection only if the borrower's written consent to enter into a supplemental agreement was obtained by the lender at the time the loan was made.

(5) A lender or holder may assign a loan subject to a supplemental repayment agreement only if it specifically notifies the buyer of the terms of the supplemental agreement. In such cases, the loan and the supplemental agreement must be assigned together.

(Approved by the Office of Management and Budget under control numbers 0915–0043 and 0915–0108)

[48 FR 38988, Aug. 26, 1983, as amended at 51 FR 30644, Aug. 28, 1986; 53 FR 6097, Feb. 29, 1988; 57 FR 28794, June 29, 1992]

§ 60.12 Deferment.

(a) After the repayment period has commenced, installments of principal and interest need not be paid during any period:

(1) During which the borrower is pursuing a full-time course of study at a HEAL school or at an institution of higher education that is a ''participating school'' in the Guaranteed Student Loan Program;

(2) Up to 4 years during which the borrower is a participant in an accredited internship or residency program, as described in § 60.11(a)(2). For a borrower who receives his or her first HEAL loan on or after October 22, 1985, this total of 4 years for an internship or residency program includes any period of postponement of the repayment period, as described in § 60.11(a)(1);

(3) Up to 3 years during which the borrower is a member of the Armed Forces of the United States;

(4) Up to 3 years during which the borrower is in service as a volunteer under the Peace Corps Act;

(5) Up to 3 years during which the borrower is a member of the National Health Service Corps; or

(6) Up to 3 years during which the borrower is a full-time volunteer under title I of the Domestic Volunteer Service Act of 1973.

(b) For any HEAL loan received on or after October 22, 1985, after the repayment period has commenced, installments of principal and interest need not be paid during any period for up to 2 years during which the borrower is a participant in:

(1) A fellowship training program, which:

(i) Is directly related to the discipline for which the borrower received the HEAL loan;

(ii) Begins within 12 months after the borrower ceases to be a participant in an accredited internship or residency program, as described in § 60.11(a)(2), or prior to the completion of the borrower's participation in such program;

(iii) Is a full-time activity in reasearch or reserch training or health care policy;

(iv) Is not a part of, an extension of, or associated with an internship or residency program, as described in § 60.11(a)(2);

(v) Pays no stipend or one which is not more than the annual stipend level

established by the Public Health Service for the payment of uniform levels of financial support for trainees receiving graduate and professional training under Public Health Service grants, as in effect at the time the borrower requests the deferment; and

(vi) Is a formally established fellowship program which was not created for a specific individual; or

(2) A full-time educational activity at an institution defined by section 435(b) of the Higher Education Act of 1965 which:

(i) Is directly related to the discipline for which the borrower received the HEAL loan;

(ii) Begins within 12 months after the borrower ceases to be a participant in an accredited internship or residency program, as described in § 60.11(a)(2), or prior to the completion of the borrower's participation in such program;

(iii) Is not a part of, an extension of, or associated with an internship or residency program, as described in § 60.11(a)(2); and

(iv) Is required for licensure, registration, or certification in the State in which the borrower intends to practice the discipline for which the borrower received the HEAL program loan.

(c) (1) To receive a deferment, including a deferral of the onset of the repayment period (see § 60.11(a)), a borrower must at least 30 days prior to, but not more than 60 days prior to, the onset of the activity and annually thereafter, submit to the lender or holder evidence of his or her status in the deferment activity and evidence that verifies deferment eligibility of the activity (with the full expectation that the borrower will begin the activity). It is the responsibility of the borrower to provide the lender or holder with all required information or other information regarding the requested deferment. If written evidence that verifies eligibility of the activity and the borrower for the deferment, including a certification from an authorized official (e.g., the director of the fellowship activity, the dean of the school, etc.), is received by the lender or holder within the required time limit, the lender or holder must approve the deferment. The lender or holder may rely in good faith upon statements of the borrower and the authorized official, except where those statements or other information conflict with information available to the lender or holder. When those verification statements or other information conflict with information available to the lender or holder, to indicate that the applicant fails to meet the requirements for deferment, the lender or holder may not approve the deferment until those conflicts are resolved.

(2) For those activities described in paragraphs (b)(1) or (b)(2) of this section, the borrower may request that the Secretary review a decision by the lender or holder denying the deferment by sending to the Secretary copies of the application for deferment and the lender's or holder's denial of the request. However, if information submitted to the lender or holder conflicts with other information available to the lender or holder, to indicate that the borrower fails to meet the requirements for deferment, the borrower may not request a review until such conflicts have been resolved. During the review process, the lender or holder must comply with any requests for information made by the Secretary. If the Secretary determines that the fellowship or educational activity is eligible for deferment and so notifies the lender or holder, the lender or holder must approve the deferment.

(Approved by the Office of Management and Budget under control numbers 0915–0034 and 0915–0108)

[48 FR 38988, Aug. 26, 1983, as amended at 51 FR 30644, Aug. 28, 1986; 53 FR 6097, Feb. 29, 1988; 57 FR 28795, June 29, 1992]

§ 60.13 Interest.

(a) *Rate.* At the lender's option, the interest rate on the HEAL loan may be calculated on a fixed rate or on a variable rate basis. However, whichever method is selected must continue over the life of the loan, except where the loan is consolidated with another HEAL loan.

(1) For all loans made on or after October 22, 1985, for each calendar quarter, the Secretary determines the maximum annual HEAL interest rate by determining the average of the bond equivalent rates reported for the 91-day

U.S. Treasury bills auctioned for the preceding calendar quarter, adding 3 percentage points, and rounding that amount to the next higher one-eighth of 1 percent.

(2) Interest that is calculated on a fixed rate basis is determined for the life of the loan during the calendar quarter in which the loan is executed. It may not exceed the rate determined for that quarter by the Secretary under paragraph (a)(1) of this section.

(3) Interest that is calculated on a variable rate basis varies every calendar quarter throughout the life of the loan as the market price of U.S. Treasury bills changes. For any quarter it may not exceed the rate determined by the Secretary under paragraph (a)(1) of this section.

(4) The Secretary announces the rate determined under paragraph (a)(1) of this section on a quarterly basis through a notice published in the FEDERAL REGISTER.

(b) *Compounding of interest.* Interest accrues from the date the loan is disbursed until the loan is paid in full. Unpaid accrued interest shall be compounded not more frequently than semiannually and added to principal. However, a lender or holder may postpone the compounding of interest before the beginning of the repayment period or during periods of deferment or forbearance and add interest to principal at the time repayment of principal begins or resumes.

(c) *Payment.* Repayment of principal and interest is due when the repayment period begins. A lender or holder must permit a borrower to postpone paying interest before the beginning of the repayment period or during a period of deferment or forbearance. In these cases, payment of interest begins or resumes on the date repayment of principal begins or resumes.

(d) *Usury laws.* No provision of any Federal or State law that limits the rate or amount of interest payable on loans shall apply to a HEAL loan.

[48 FR 38988, Aug. 26, 1983, as amended at 51 FR 30644, Aug. 28, 1986; 57 FR 28795, June 29, 1992]

§ 60.14 The insurance premium.

(a) *General.* (1) The Secretary insures each lender or holder for the losses of principal and interest it may incur in the event that a borrower dies; becomes totally and permanently disabled; files for bankruptcy under chapter 11 or 13 of the Bankruptcy Act; files for bankruptcy under chapter 7 of the Bankruptcy Act and files a complaint to determine the dischargeability of the HEAL loan; or defaults on his or her loan. For this insurance, the Secretary charges the lender an insurance premium. The insurance premium is due to the Secretary on the date of disbursement of the HEAL loan.

(2) The lender may charge the borrower an amount equal to the cost of the insurance premium. The cost of the insurance premium may be charged to the borrower by the lender in the form of a one-time special charge with no subsequent adjustments required. The lender may bill the borrower separately for the insurance premium or may deduct an amount attributable to it from the loan proceeds before the loan is disbursed. In either case, the lender must clearly identify to the borrower the amount of the insurance premium and the method of calculation.

(3) If the lender does not pay the insurance premium on or before 30 days after disbursement of the loan, a late fee will be charged on a daily basis at the same rate as the interest rate that the lender charges for the HEAL loan for which the insurance premium is past due. The lender may not pass on this late fee to the borrower.

(4) HEAL insurance coverage ceases to be effective if the insurance premium is not paid within 60 days of the disbursement of the loan.

(5) Except in cases of error, premiums are not refundable by the Secretary, and need not be refunded by the lender to the borrower, even if the borrower graduates or withdraws from the school, defaults, dies or becomes totally and permanently disabled.

(b) *Rate.* The rate of the insurance premium shall not exceed the statutory maximum. The Secretary announces changes in the rate of the insurance premium through a notice published in the FEDERAL REGISTER.

(c) *Method of calculation*—(1) *Student borrowers.* For loans disbursed prior to July 22, 1986, the lender must calculate the insurance premium on the basis of

the number of months beginning with the month following the month in which the loan proceeds are disbursed to the student borrower and ending 9 full months after the month of the student's anticipated date of graduation. For loans disbursed on or after July 22, 1986, the insurance premium shall be calculated as a one-time flat rate on the principal of the loan at the time of disbursement.

(2) *Non-student borrowers.* For loans disbursed prior to July 22, 1986, the lender must calculate the insurance premium for nonstudent borrowers on the basis of the number of months beginning with the month following the month in which the loan proceeds are disbursed to the borrower and ending at the conclusion of the month preceding the month in which repayment of principal is expected to begin or resume on the borrower's previous HEAL loans. For loans disbursed on or after July 22, 1986, the insurance premium shall be calculated as a one-time flat rate on the principal of the loan at the time of disbursement.

(3) *Multiple installments.* In cases where the lender disburses the loan in multiple installments, the insurance premium is calculated for each disbursement.

[48 FR 38988, Aug. 26, 1983, as amended at 51 FR 30644 Aug. 28, 1986; 52 FR 746, Jan. 8, 1987; 56 FR 42700, Aug. 29, 1991; 57 FR 28795, June 29, 1992]

§ 60.15 Other charges to the borrower.

(a) *Late charges.* If the borrower fails to pay all of a required installment payment or fails to provide written evidence that verifies eligibility for the deferment of the payment within 30 days after the payment's due date, the lender or holder will require that the borrower pay a late charge. A late charge must be equal to 5 percent of the unpaid portion of the payment due.

(b) *Collection charges.* The lender or holder may also require that the borrower pay the holder of the note for reasonable costs incurred by the holder or its agent in collecting any installment not paid when due. These costs may include attorney's fees, court costs, telegrams, and long-distance phone calls. The holder may not charge the borrower for the normal costs associated with preparing letters and making personal and local telephone contacts with the borrower. A service agency's fee for normal servicing of a loan may not be passed on to the borrower, either directly or indirectly. No charges, other than those authorized by this section, may be passed on to the borrower, either directly or indirectly, without prior approval of the Secretary.

(c) *Other loan making costs.* A lender may not pass on to the borrower any cost of making a HEAL loan other than the costs of the insurance premium.

[48 FR 38988, Aug. 26, 1983, as amended at 52 FR 747, Jan. 8, 1987; 57 FR 28795, June 29, 1992]

§ 60.16 Power of attorney.

Neither a lender nor a school may obtain a borrower's power of attorney or other authorization to endorse a disbursement check on behalf of a borrower. The borrower must personally endorse the check and may not authorize anyone else to endorse it on his or her behalf.

§ 60.17 Security and endorsement.

(a) A HEAL loan must be made without security.

(b) With one exception, it must also be made without endorsement. If a borrower is a minor and cannot under State law create a legally binding obligation by his or her own signature, a lender may require an endorsement by another person on the borrower's HEAL note. For purposes of this paragraph, an ''endorsement'' means a signature of anyone other than the borrower who is to assume either primary or secondary liability on the note.

§ 60.18 Consolidation of HEAL loans.

HEAL loans may be consolidated as follows provided that the lender or holder must first inform the borrower of the effect of the consolidation on the interest rate and explain to the borrower that he or she is not required to agree to the consolidation:

(a) If a lender or holder holds two or more HEAL loans made to the same borrower, the lender or holder and the borrower may agree to consolidate the loans into a single HEAL loan obligation evidenced by one promissory note.

(b) A HEAL loan may be consolidated with any other loan only if:

(1) The consolidation will not result in terms less favorable to the borrower than if no consolidation had occurred, and

(2) The Federal Government does not, as a result of the consolidation, become liable for any payment of principal or interest for a Guaranteed Student Loan under the provisions of section 439(o) of the Higher Education Act of 1965.

(Approved by the Office of Management and Budget under control number 0915–0108)

[48 FR 38988, Aug. 26, 1983, as amended at 57 FR 28795, June 29, 1992]

§ 60.19 Forms.

All HEAL forms are approved by the Secretary and may not be changed without prior approval by the Secretary. HEAL forms shall not be signed in blank by a borrower, a school, a lender or holder, or an agent of any of these. The Secretary may prescribe who must complete the forms, and when and to whom the forms must be sent. All HEAL forms must contain a statement that any person who knowingly makes a false statement or misrepresentation in a HEAL loan transaction, bribes or attempts to bribe a Federal official, fraudulently obtains a HEAL loan, or commits any other illegal action in connection with a HEAL loan is subject to possible fine and imprisonment under Federal statute.

[52 FR 747, Jan. 8, 1987, as amended at 57 FR 28795, June 29, 1992]

§ 60.20 The Secretary's collection efforts after payment of a default claim.

After paying a default claim on a HEAL loan, the Secretary attempts to collect from the borrower and any valid endorser in accordance with the Federal Claims Collection Standards (4 CFR parts 101 through 105), the Office of Management and Budget Circular A–129, issued May 9, 1985, and the Department's Claims Collection Regulation (45 CFR part 30). The Secretary attempts collection of all unpaid principal, interest, penalties, administrative costs, and other charges or fees, except in the following situations:

(a) *The borrower has a valid defense on the loan.* The Secretary refrains from collection against the borrower or endorser to the extent of any defense that the Secretary concludes is valid. Examples of a valid defense include expiration of the statute of limitations and infancy.

(b) *A school owes the borrower a refund for the period covered by the loan.* In this situation, the Secretary refrains from collection to the extent of the unpaid refund if the borrower assigns to the Secretary the right to receive the refund.

(c) *The school or lender or holder is the subject of a lawsuit or Federal administrative proceeding.* In this situation, if the Secretary determines that the proceeding involves allegations that, if proven, would provide the borrower with a full or partial defense on the loan, then the Secretary may suspend collection activity on all or part of a loan until the proceeding ends. The Secretary suspends collection activity only for so long as the proceeding is being energetically prosecuted in good faith and the allegations that relate to the borrower's defense are reasonably likely to be proven.

(d) *The borrower dies or becomes totally and permanently disabled.* In this situation, the Secretary terminates all collection activity against the borrower. If the borrower dies or becomes totally and permanently disabled, the Secretary also terminates all collection activity against any endorser.

[48 FR 38988, Aug. 26, 1983, as amended at 52 FR 747, Jan. 8, 1987; 57 FR 28795, June 29, 1992]

§ 60.21 Refunds.

(a) *Student authorization.* By applying for a HEAL loan, a student authorizes a participating school to make payment of a refund that is allocable to a HEAL loan directly to the original lender (or to a subsequent holder of the loan note, if the school has knowledge of the holder's identity).

(b) *Treatment by lenders or holders.* (1) A holder of a HEAL loan must treat a refund payment received from a HEAL school as a downward adjustment in the principal amount of the loan.

(2) When a lender receives a school refund check for a loan it no longer holds, the lender must transfer that

payment to the holder of the loan and either inform the borrower about the refund check and where it was sent or, if the borrower's address is unknown, notify the current holder that the borrower was not informed. The current holder must provide the borrower with a written notice of the refund payment.

(Approved by the Office of Management and Budget under control number 0915–0108)

[48 FR 38988, Aug. 26, 1983, as amended at 57 FR 28795, June 29, 1992]

Subpart D—The Lender and Holder

§ 60.30 Which organizations are eligible to apply to be HEAL lenders and holders?

(a) A HEAL lender may make and hold loans under the HEAL program.

(b) The following types of organizations are eligible to apply to the Secretary to be HEAL lenders:

(1) A financial or credit institution (including a bank, savings and loan association, credit union, or insurance company) which is subject to examination and supervision in its capacity as a lender by an agency of the United States or of the State in which it has its principal place of business;

(2) A pension fund approved by the Secretary;

(3) An agency or instrumentality of a State;

(4) A HEAL school; and

(5) A private nonprofit entity, designated by the State, regulated by the State, and approved by the Secretary.

(c) The following types of organizations are eligible to apply to the Secretary to be HEAL holders:

(1) Public entities in the business of purchasing student loans;

(2) The Student Loan Marketing Association (popularly known as ''Sallie Mae''); and

(3) Other eligible lenders.

(d) HEAL holders must comply with any provisions in the regulations required of HEAL lenders including, but not limited to, provisions regarding applications, contracts, and due diligence.

[48 FR 38988, Aug. 26, 1983, as amended at 57 FR 28795, June 29, 1992]

§ 60.31 The application to be a HEAL lender or holder.

(a) In order to be a HEAL lender or holder, an eligible organization must submit an application to the Secretary annually.

(b) In determining whether to enter into an insurance contract with an applicant and what the terms of that contract should be, the Secretary may consider the following criteria:

(1) Whether the applicant is capable of complying with the requirements in the HEAL regulations applicable to lenders and holders;

(2) The amount and rate of loans which are currently delinquent or in default, if the applicant has had prior experience with similar Federal or State student loan programs; and

(3) The financial resources of the applicant.

(c) The applicant must develop and follow written procedures for making, servicing and collecting HEAL loans. These procedures must be reviewed during the biennial audit required by § 60.42(d). If the applicant uses procedures more stringent than those required by §§ 60.34 and 60.35 for its other loans of comparable dollar value, on which it has no Federal, State, or other third party guarantee, it must include those more stringent procedures in its written procedures for servicing and collecting its HEAL loans.

(d) The applicant must submit sufficient materials with his or her application to enable the Secretary to fairly evaluate the application in accordance with these criteria.

(Approved by the Office of Management and Budget under control numbers 0915–0034 and 0915–0108)

[48 FR 38988, Aug. 26, 1983, as amended at 52 FR 747, Jan. 8, 1987; 57 FR 28796, June 29, 1992]

§ 60.32 The HEAL lender or holder insurance contract.

(a)(1) If the Secretary approves an application to be a HEAL lender or holder, the Secretary and the lender or holder must sign an insurance contract. Under this contract, the lender or holder agrees to comply with all the laws, regulations, and other requirements applicable to its participation in the HEAL program and the Secretary

agrees to insure each eligible HEAL loan held by the lender or holder against the borrower's default, death, total and permanent disability, bankruptcy under chapter 11 or 13 of the Bankruptcy Act, or bankruptcy under chapter 7 of the Bankruptcy Act when the borrower files a complaint to determine the dischargeability of the HEAL loan. The Secretary's insurance covers 100 percent of the lender's or holder's losses on both unpaid principal and interest, except to the extent that a borrower may have a defense on the loan other than infancy.

(2) HEAL insurance, however, is not unconditional. The Secretary issues HEAL insurance on the implied representations of the lender that all the requirements for the initial insurability of the loan have been met. HEAL insurance is further conditioned upon compliance by the holder of the loan with the HEAL statute and regulations, the lender's or holder's insurance contract, and its own loan management procedures set forth in writing pursuant to § 60.31(c). The contract may contain a limit on the duration of the contract and the number or amount of HEAL loans a lender may make or hold. Each HEAL lender has either a standard insurance contract or a comprehensive insurance contract with the Secretary, as described below.

(b) *Standard insurance contract.* A lender with a standard insurance contract must submit to the Secretary a borrower's loan application for HEAL insurance on each loan that the lender determines to be eligible. The Secretary notifies the lender whether the loan is or is not insurable, the amount of the insurance, and the expiration date of the insurance commitment. A loan which has been disbursed under a standard contract of insurance prior to the Secretary's approval of the application is considered not to have been insured.

(c)(1) *Comprehensive insurance contract.* A lender with a comprehensive insurance contract may disburse a loan without submitting an individual borrower's loan application to the Secretary for approval. All eligible loans made by a lender with this type of contract are insured immediately upon disbursement.

(2) The Secretary will revoke the comprehensive contract of any lender who utilizes procedures which are inconsistent with the HEAL statute and regulations, the lender's insurance contract, or its own loan management procedures set forth in writing pursuant to § 60.31(c), and require that such lenders disburse HEAL loans only under a standard contract. When the Secretary determines that the lender is in compliance with the HEAL statute and regulations and its own loan management procedures set forth in writing pursuant to § 60.31(c), the lender may reapply for a comprehensive contract.

(3) In providing comprehensive contracts, the Secretary shall give priority to eligible lenders that:

(i) Make loans to students at interest rates below the rates prevailing during the period involved; or

(ii) Make loans under terms that are otherwise favorable to the student relative to the terms under which eligible lenders are generally making loans during the period involved.

(Approved by the Office of Management and Budget under control number 0915–0108)

[48 FR 38988, Aug. 26, 1983, as amended at 52 FR 747, Jan. 8, 1987; 56 FR 42701, Aug. 29, 1991; 57 FR 28796, June 29, 1992]

§ 60.33 Making a HEAL loan.

The loan-making process includes the processing of necessary forms, the approval of a borrower for a loan, determination of a borrower's creditworthiness, the determination of the loan amount (not to exceed the amount approved by the school), the explanation to a borrower of his or her responsibilities under the loan, the execution of the promissory note, and the disbursement of the loan proceeds. A lender may rely in good faith upon statements of an applicant and the HEAL school contained in the loan application papers, except where those statements are in conflict with information obtained from the report on the applicant's credit history, or other information available to the lender. Except where the statements are in conflict with information obtained from the applicant's credit history or other information available to the lender, a lender making loans to nonstudent borrowers may rely in good faith upon

statements by the borrower and authorizing officials of internship, residency, or other programs for which a borrower may receive a deferment.

(a) *Processing of forms.* Before making a HEAL loan, a lender must determine that all required forms have been completed by the borrower, the HEAL school, the lender, and the authorized official for an internship, a residency, or other deferment activity.

(b) *Approval of borrower.* A lender may make a HEAL loan only to an eligible student or nonstudent borrower.

(c) *Lender determination of the borrower's creditworthiness.* The lender may make HEAL loans only to an applicant that the lender has determined to be creditworthy. This determination must be made at least once for each academic year during which the applicant applies for a HEAL loan. An applicant will be determined to be ''creditworthy'' if he or she has a repayment history that has been satisfactory on any loans on which payments have become due. The lender may not determine that an applicant is creditworthy if the applicant is currently in default on any loan (commercial, consumer, or educational) until the delinquent account is made current or satisfactory arrangements are made between the affected lender(s) and the HEAL applicant. The lender must obtain documentation, such as a letter from the authorized official(s) of the affected lender(s) or a corrected credit report indicating that the HEAL applicant has taken satisfactory actions to bring the account into good standing. It is the responsibility of the HEAL loan applicant to assure that the lender receives each such documentation. No loan may be made to an applicant who is delinquent on any Federal debt until the delinquent account is made current or satisfactory arrangements are made between the affected agency and the HEAL applicant. The lender must receive a letter from the authorized Federal official of the affected Federal agency stating that the borrower has taken satisfactory actions to bring the account into good standing. It is the responsibility of the loan applicant to assure that the lender has received each such letter. The absence of any previous credit, however, is not an indication that the applicant is not creditworthy and is not to be used as a reason to deny the status of creditworthy to an applicant. The lender must determine the creditworthiness of the applicant using, at a minimum, the following:

(1) A report of the applicant's credit history obtained from an appropriate consumer credit reporting agency, which must be used in making the determinations required by paragraph (c) of this section; and

(2) For student applicants only, the certification made by the applicant's school under § 60.51(e).

(d) *Determination of loan amount.* A lender may not make a HEAL loan in an amount that exceeds the permissible annual and aggregate maximums described in § 60.10.

(e) *Promissory note.* (1) Each loan must be evidenced by a promissory note approved by the Secretary. A lender must obtain the Secretary's prior approval of the note form before it makes a HEAL loan evidenced by a promissory note containing any deviation from the provisions of the form most currently approved by the Secretary. The lender must give the borrower a copy of each executed note.

(2) The lender must explain to the borrower that the loan must be repaid and that the loan proceeds may be applied toward educational expenses only.

(f) *Disbursement of HEAL loan.* (1) A lender must disburse HEAL loan proceeds:

(i) To a student borrower, by means of a check or draft payable jointly to the student borrower and the HEAL school. Except where a lender is also a school, a lender must mail the check or draft to the school. A lender may not disburse the loan proceeds earlier than is reasonably necessary to meet the cost of education for the period for which the loan is made.

(ii) To a nonstudent borrower, by means of a check or draft payable to the borrower. However, when a previous loan is held by a different lender, the current lender must make the HEAL loan disbursement check or draft payable jointly to the borrower and the holder of the previous HEAL loan for which interest is payable.

(2) Effective July 1, 1987, a lender must disburse the HEAL loan proceeds in two or more installments unless the loan is intended to cover a period of no more than one-half an academic year. The amount disbursed at one time must correspond to the borrower's educational expenses for the period for which the disbursement is made, and must be indicated by the school on the borrower's application. If the loan is intended for more than one-half an academic year, the school must indicate on the borrower's application both the approximate dates of disbursement and the amount the borrower will need on each such date. In no case may the lender disburse the proceeds earlier than is reasonably necessary to meet the costs of education for the period for which the disbursement or the loan is made.

(g) If the lender determines that the applicant is not creditworthy, pursuant to paragraph (c) of this section, the lender must not approve the HEAL loan request. If the applicant is a student, the lender must notify the applicant and the applicant's school named on the application form of the denial of a HEAL loan, stating the reason for the denial.

(h) The lender must report a borrower's HEAL indebtedness to one or more national credit bureaus within 120 days of the date the final disbursement on the loan is made.

(Approved by the Office of Management and Budget under control numbers 0915–0043, 0915–0108, and 0915–0144)

[48 FR 38988, Aug. 26, 1983, as amended at 51 FR 30645, Aug. 28, 1986; 52 FR 748, Jan. 8, 1987; 57 FR 28796, June 29, 1992; 58 FR 67349, Dec. 21, 1993]

§ 60.34 HEAL loan account servicing.

HEAL loan account servicing involves the proper maintenance of records, and the proper review and management of accounts. Generally accepted account servicing standards ensure that collections are received and accounted for, delinquent accounts are identified promptly, and reports are produced comparing actual results to previously established objectives.

(a) *Borrower inquiries.* A lender or holder must respond on a timely basis to written inquiries and other communications from a borrower and any endorser of a HEAL loan.

(b) *Conversion of loan to repayment status.* (1) At least 30 and not more than 60 days before the commencement of the repayment period, the lender or holder must contact the borrower in writing to establish the terms of repayment. Lenders or holders may not charge borrowers for the additional interest or other charges, penalties, or fees that accrue when a lender or holder does not contact the borrower within this time period and a late conversion results.

(2) Terms of repayment are established in a written schedule that is made a part of, and subject to the terms of, the borrower's original HEAL note.

(3) The lender or holder may not surrender the original promissory note to the borrower until the loan is paid in full. At that time, the lender or holder must give the borrower the original promissory note.

(c) *Borrower contacts.* The lender or holder must notify each borrower by a written contact, which has an address correction request on the envelope, of the balance owed for principal, interest, insurance premiums, and any other charges or fees owed to the lender, at least every 6 months from the time the loan is disbursed. The lender or holder must use this notice to remind the borrower of the option, without penalty, to pay all or part of the principal and accrued interest at any time.

(d) *Skip-tracing.* If, at any time, the lender or holder is unable to locate a borrower, the lender or holder must initiate skip-tracing procedures as described in § 60.35(a)(2).

(Approved by the Office of Management and Budget under control numbers 0915–0043 and 0915–0108)

[48 FR 38988, Aug. 26, 1983, as amended at 52 FR 748, Jan. 8, 1987; 57 FR 28796, June 29, 1992]

§ 60.35 HEAL loan collection.

A lender or holder must exercise due diligence in the collection of a HEAL loan with respect to both a borrower and any endorser. In order to exercise due diligence, a lender or holder must implement the following procedures when a borrower fails to honor his or her payment obligations:

(a)(1) When a borrower is delinquent in making a payment, the lender or holder must remind the borrower within 15 days of the date the payment was due by means of a written contact. If payments do not resume, the lender or holder must contact both the borrower and any endorser at least 3 more times at regular intervals during the 120-day delinquent period following the first missed payment of that 120-day period. The second demand notice for a delinquent account must inform the borrower that the continued delinquent status of the account will be reported to consumer credit reporting agencies if payment is not made. Each of the required four contacts must consist of at least a written contact which has an address correction request on the envelope. The last contact must consist of a telephone contact, in addition to the required letter, unless the borrower cannot be contacted by telephone. The lender or holder may choose to substitute a personal contact for a telephone contact. A record must be made of each attempt to contact and each actual contact, and that record must be placed in the borrower's file. Each contact must become progressively firmer in tone. If the lender or holder is unable to locate the borrower and any endorser at any time during the period when the borrower is delinquent, the lender or holder must initiate the skip-tracing procedures described in paragraph (a)(2) of this section.

(2) If the lender or holder is unable to locate either the borrower or the endorser at any time, the lender or holder must initiate and use skip-tracing activities which are at least as extensive and effective as those it uses to locate borrowers delinquent in the repayment of its other loans of comparable dollar value. To determine the correct address of the borrower, these skip-tracing procedures should include, but need not be limited to, contacting any other individual named on the borrower's HEAL application or promissory note, using such sources as telephone directories, city directories, postmasters, drivers license records in State and local government agencies, records of members of professional associations, consumer credit reporting agencies, skip locator services, and records at any school attended by the borrower. All skip-tracing activities used must be documented. This documentation must consist of a written record of the action taken and its date and must be presented to the Secretary when requesting preclaim assistance or when filing a default claim for HEAL insurance.

(b) When a borrower is 90 days delinquent in making a payment, the lender or holder must immediately request preclaim assistance from the Public Health Service. The Secretary does not pay a default claim if the lender or holder fails to request preclaim assistance.

(c) Prior to the filing of a default claim, a lender or holder must use, at a minimum, collection practices that are at least as extensive and effective as those used by the lender or holder in the collection of its other loans. These practices must include, but need not be limited to:

(1) Using collection agents, which may include its own collection department or other internal collection agents;

(2) Immediately notifying an appropriate consumer credit reporting agency regarding accounts overdue by more than 60 days; and

(3) Commencing and prosecuting an action for default unless:

(i) In the determination of the Secretary that:

(A) The lender or holder has made reasonable efforts to serve process on the borrower involved and has been unsuccessful in these efforts; or

(B) Prosecution of such an action would be fruitless because of the financial or other circumstances of the borrower;

(ii) For loans made before November 4, 1988, the loan involved was made in an amount of less than $5,000; or

(iii) For loans made on or after November 4, 1988, the loan involved was made in an amount of less than $2,500.

(d) If the Secretary's preclaim assistance locates the borrower, the lender or holder must implement the loan collection procedures described in this section. When the Secretary's preclaim assistance is unable to locate the borrower, a default claim may be filed by the lender as described in § 60.40. The

Secretary does not pay a default claim if the lender or holder has not complied with the HEAL statute and regulations or the lender's or holder's insurance contract.

(e) If a lender or holder does not sue the borrower, it must send a final demand letter to the borrower and any endorser at least 30 days before a default claim is filed.

(f) If a lender or holder sues a defaulted borrower or endorser, it may first apply the proceeds of any judgment against its reasonable attorney's fees and court costs, whether or not the judgment provides for these fees and costs.

(g) *Collection of chapter 7 bankruptcies.* (1) If a borrower files for bankruptcy under chapter 7 of the Bankruptcy Act and does not file a complaint to determine the dischargeability of the HEAL loan, the lender or holder is responsible for monitoring the bankruptcy case in order to pursue collection of the loan after the bankruptcy proceedings have been completed.

(i) For any loan for which the lender or holder had not begun to litigate against the borrower prior to the imposition of the automatic stay, the period of the automatic stay is to be considered as an extended forbearance authorized by the Secretary, in addition to the 2-year period of forbearance which lenders and holders are authorized to grant without prior approval from the Secretary. Only periods of delinquency following the date of receipt (as documented by a date stamp) of the discharge of debtor notice (or other written notification from the court or the borrower's attorney of the end of the automatic stay imposed by the Bankruptcy Court) can be included in determining default, as described in § 60.40(c)(1)(i). The lender or holder must attempt to reestablish repayment terms with the borrower in writing no more than 30 days after receipt of the discharge of debtor notice (or other written notification from the court or the borrower's attorney of the end of the automatic stay imposed by the Bankruptcy Court), in accordance with the procedures followed at the end of a forbearance period. If the borrower fails to make a payment as scheduled, the lender or holder must attempt to obtain repayment through written and telephone contacts in accordance with the intervals established in paragraph (a)(1) of this section, and must perform the other HEAL loan collection activities required in this section, before filing a default claim.

(ii) For any loan for which the lender or holder had begun to litigate against the borrower prior to the imposition of the automatic stay, the lender or holder must, upon written notification from the court or the borrower's attorney that the bankruptcy proceedings have been completed, either resume litigation or treat the loan in accordance with paragraph (g)(1)(i) of this section.

(2) If the lender or holder has not received written notification of discharge within 12 months of the date that the borrower filed for bankruptcy, the lender or holder must contact the court and the borrower's attorney (if known) within 30 days to determine if the bankruptcy proceedings have been completed. If no response is received within 30 days of the date of these contacts, the lender or holder must resume its collection efforts, in accordance with paragraph (g)(1) of this section. If a written response from the court or the borrower's attorney indicates that the bankruptcy proceedings are still underway, the lender or holder is not to pursue further collection efforts until receipt of written notice of discharge, except that follow-up in accordance with this paragraph must be done at least once every 12 months until the bankruptcy proceedings have been completed.

(3) If, despite the lender or holder's compliance with required procedures, a loan subject to the requirements of paragraph (g)(1) of this section is discharged, the lender or holder must file a claim with the Secretary within 10 days of the initial date of receipt (as documented by a date stamp) of written notification of the discharge from the court or the borrower's attorney, in accordance with the procedures set forth in § 60.40(c)(4). The lender or holder also must file with the bankruptcy court an objection to the discharge of the HEAL loan, and must include with the claim documentation showing that

the bankruptcy proceedings were handled properly and expeditiously (e.g., all documents sent to or received from the bankruptcy court, including evidence which shows the period of the bankruptcy proceedings).

(Approved by the Office of Management and Budget under control numbers 0915–0100 and 0915–0108)

[48 FR 38988, Aug. 26, 1983, as amended at 52 FR 749, Jan. 8, 1987; 57 FR 28796, June 29, 1992]

§ 60.36 Consequence of using an agent.

The delegation of functions to a servicing agency or other party does not relieve a lender or holder of its responsibilities under the HEAL program.

[57 FR 28797, June 29, 1992]

§ 60.37 Forbearance.

(a) *Forbearance* means an extension of time for making loan payments or the acceptance of smaller payments than were previously scheduled to prevent a borrower from defaulting on his or her payment obligations. A lender or holder must notify each borrower of the right to request forbearance.

(1) Except as provided in paragraph (a)(2) of this section, a lender or holder must grant forbearance whenever the borrower is temporarily unable to make scheduled payments on a HEAL loan and the borrower continues to repay the loan in an amount commensurate with his or her ability to repay the loan. Any circumstance which affects the borrower's ability to repay the loan must be fully documented.

(2) If the lender or holder determines that the default of the borrower is inevitable and that forbearance will be ineffective in preventing default, the lender or holder may submit a claim to the Secretary rather than grant forbearance. If the Secretary is not in agreement with the determination of the lender or holder, the claim will be returned to the lender or holder as disapproved and forbearance must be granted.

(b) A lender or holder must exercise forbearance in accordance with terms that are consistent with the 25- and 33-year limitations on the length of repayment (described in § 60.11) if the lender or holder and borrower agree in writing to the new terms. Each forbearance period may not exceed 6 months.

(c) A lender or holder may also exercise forbearance for periods of up to 6 months in accordance with terms that are inconsistent with the minimum annual payment requirement if the lender or holder complies with the requirements listed in paragraphs (c) (1) through (4) of this section. Subsequent renewals of the forbearance must also be documented in accordance with the following requirements:

(1) The lender or holder must reasonably believe that the borrower intends to repay the loan but is currently unable to make payments in accordance with the terms of the loan note. The lender or holder must state the basis for its belief in writing and maintain that statement in its loan file on that borrower.

(2) Both the borrower and an authorized official of the lender or holder must sign a written agreement of forbearance.

(3) If the agreement between the borrower and lender or holder provides for deferment of all payments, the lender or holder must contact the borrower at least every 3 months during the period of forbearance in order to remind the borrower of the outstanding obligation to repay.

(4) The total period of forbearance (with or without interruption) granted by the lender or holder to any borrower must not exceed 2 years. However, when the borrower and the lender or holder believe that there are bona fide reasons why this period should be extended, the lender or holder may request a reasonable extension beyond the 2-year period from the Secretary. This request must document the reasons why the extension should be granted. The lender or holder may grant the extension for the approved time period if the Secretary approves the extension request.

(Approved by the Office of Management and Budget under control number 915–0108)

[57 FR 28797, June 29, 1992]

§ 60.38 Assignment of a HEAL loan.

A HEAL note may not be assigned except to another HEAL lender, the Student Loan Marketing Association

(popularly known as ''Sallie Mae''), or a public entity in the business of purchasing student loans, and except as provided in § 60.40. In this section ''seller'' means any kind of assignor and ''buyer'' means any kind of assignee.

(a) *Procedure*. A HEAL note assigned from one lender or holder to another must be subject to a blanket endorsement together with other HEAL notes being assigned or must individually bear effective words of assignment. Either the blanket endorsement or the HEAL note must be signed and dated by an authorized official of the seller. Within 30 days of the transaction, the buyer must notify the following parties of the assignment:

(1) The Secretary;

(2) The borrower. The notice to the borrower must contain a clear statement of all the borrower's rights and responsibilities which arise from the assignment of the loan, including a statement regarding the consequences of making payments to the seller subsequent to receipt of the notice; and

(3) The borrower's school, as shown on the application form supporting the loan purchased by the buyer, if the borrower is enrolled in school.

(b) *Risks assumed by the buyer*. Upon acquiring a HEAL loan, a new holder assumes responsibility for the consequences of any previous violations of applicable statutes, regulations, or the terms of the note except for defects under § 60.41(d). A HEAL note is not a negotiable instrument, and a subsequent holder is not a holder in due course. If the borrower has a valid legal defense that could be asserted against the previous holder, the borrower can also assert the defense against the new holder. In this situation, if the new holder files a default claim on a loan, the Secretary denies the default claim to the extent of the borrower's defense. Furthermore, when a new holder files a claim on a HEAL loan, it must provide the Secretary with the same documentation that would have been required of the original lender.

(c) *Warranty*. Nothing in this section precludes the buyer of a HEAL loan from obtaining a warranty from the seller covering certain future reductions by the Secretary in computing the amount of insurable loss, if any, on a claim filed on the loan. The warranty may only cover reductions which are attributable to an act or failure to act of the seller or other previous holder. The warranty may not cover matters for which the buyer is charged with responsibility under the HEAL regulations.

(d) *Bankruptcy*. If a lender or holder assigns a HEAL loan to a new holder, or a new holder acquires a HEAL loan under 20 U.S.C. 1092a (the Combined Payment Plan authority), and the previous holder(s) subsequently receives court notice that the borrower has filed for bankruptcy, the previous holder(s) must forward the bankruptcy notice to the purchaser within 10 days of the initial date of receipt, as documented by a date stamp, except that if it is a chapter 7 bankruptcy with no complaint for dismissal, the previous holder(s) must file the notice with the purchaser within 30 days of the initial date of receipt, as documented by a date stamp. The previous holder(s) also must file a statement with the court notifying it of the change of ownership. Notwithstanding the above, the current holder will not be held responsible for any loss due to the failure of the prior holder(s) to meet the deadline for giving notice if such failure occurs after the current holder purchased the loan.

(Approved by the Office of Management and Budget under control numbers 0915–0034 and 0915–0108)

[48 FR 38988, Aug. 26, 1983, as amended at 52 FR 749, Jan. 8, 1987; 56 FR 42701, Aug. 29, 1991; 57 FR 28797, June 29, 1992]

§ 60.39 Death and disability claims.

(a) *Death*. The Secretary will discharge a borrower's liability on the loan in accordance with section 738 of the Act upon the death of the borrower. The holder of the loan may not attempt to collect on the loan from the borrower's estate or any endorser. The holder must secure a certification of death or whatever official proof is conclusive under State law. The holder must return to the sender any payments, except for refunds under § 60.21, received from the estate of the borrower or paid on behalf of the borrower after the date of death.

(b) *Disability*. (1) The Secretary will discharge a borrower's liability on the loan in accordance with section 738 of the Act if the borrower is found to be permanently and totally disabled on recommendation of the holder of the loan and as supported by whatever medical certification the Secretary may require. A borrower is totally and permanently disabled if he or she is unable to engage in any substantial gainful activity because of a medically determinable impairment, which the Secretary expects to continue for a long and indefinite period of time or to result in death.

(2) After being notified by the borrower or the borrower's representative that the borrower claims to be totally and permanently disabled, the holder of the loan may not attempt to collect on the loan from the borrower or any endorser. The holder must promptly request that the Secretary determine whether a borrower has become totally and permanently disabled. With its request, the holder must submit medical evidence no more than 4 months old that it has obtained from the borrower or the borrower's representative.

(3) If the Secretary determines that the borrower is totally and permanently disabled, the lender or holder must return to the borrower any payments, except for refunds under § 60.21, that it receives after being notified that the borrower claims to be totally and permanently disabled.

(Approved by the Office of Management and Budget under control number 0915–0108)

[48 FR 38988, Aug. 26, 1983, as amended at 57 FR 28797, June 29, 1992]

§ 60.40 Procedures for filing claims.

(a) A lender or holder must file an insurance claim on a form approved by the Secretary. The lender or holder must attach to the claim all documentation necessary to litigate a default, including any documents required to be submitted by the Federal Claims Collection Standards, and which the Secretary may require. Failure to submit the required documentation and to comply with the HEAL statute and regulations or the lender's or holder's insurance contract will result in a claim not being honored. The Secretary may deny a claim that is not filed within the period specified in this section. The Secretary requires for all claims at least the following documentation:

(1) The original promissory note;

(2) An assignment to the United States of America of all right, title, and interest of the lender or holder in the note;

(3) The loan application;

(4) The history of the loan activities from the date of loan disbursement through the date of claim, including any payments made; and

(5) A Borrower Status Form (HRSA–508), documenting each deferment granted under § 60.12 or a written statement from an appropriate official stating that the borrower was engaged in an activity for which he or she was entitled to receive a deferment at the time the deferment was granted.

(b) The Secretary's payment of a claim is contingent upon receipt of all required documentation and an assignment to the United States of America of all right, title, and interest of the lender or holder in the note underlying the claim. The lender or holder must warrant that the loan is eligible for HEAL insurance.

(c) In addition, the lender or holder must comply with the following requirements for the filing of default, death, disability, and bankruptcy claims:

(1) *Default claims*. *Default* means the persistent failure of the borrower to make a payment when due or to comply with other terms of the note or other written agreement evidencing a loan under circumstances where the Secretary finds it reasonable to conclude that the borrower no longer intends to honor the obligation to repay the loan. In the case of a loan repayable (or on which interest is payable) in monthly installments, this failure must have persisted for 120 days. In the case of a loan repayable (or on which interest is payable) in less frequent installments, this failure must have persisted for 180 days. If, for a particular loan, an automatic stay is imposed on collection activities by a Bankruptcy Court, and the lender or holder receives written notification of the automatic stay prior to initiating legal proceedings against the borrower, the 120-

or 180-day period does not include any period prior to the end of the automatic stay.

(i) If a lender or holder determines that it is not appropriate to commence and prosecute an action against a default borrower pursuant to § 60.35(c)(3), it must file a default claim with the Secretary within 30 days after a loan has been determined to be in default.

(ii) If a lender files suit against a defaulted borrower and does not pursue collection of the judgment obtained as a result of the suit, it must file a default claim with the Secretary within 60 days of the date of issuance of the judgment. If a lender or holder files suit against a defaulted borrower, and pursues collection of the judgment obtained as a result of the suit, these collection activities must begin within 60 days of the date of issuance of the judgment. If the lender or holder is unable to collect the full amount of principal and interest owed, a claim must be filed within 30 days of completion of the post-judgment collection activities. In either case, the lender or holder must assign the judgment to the Secretary as part of the default claim.

(iii) In addition to the documentation required for all claims, the lender or holder must submit with its default claim at least the following:

(A) Repayment schedule(s);

(B) A collection history, if any;

(C) A final demand letter;

(D) The original or a copy of all correspondence relevant to the HEAL loan to or from the borrower (whether received by the original lender, a subsequent holder, or an independent servicing agent);

(E) A claims collection litigation report; and

(F) If the defaulted borrower filed for bankruptcy under chapter 7 of the Bankruptcy Act and did not file a complaint to determine the dischargeability of the loan, all documents sent to or received from the bankruptcy court, including evidence which shows the period of the bankruptcy proceedings.

(iv) If a lender or holder files a default claim on a loan and subsequently receives written notice from the court or the borrower's attorney that the borrower has filed for bankruptcy under chapter 11 or 13 of the Bankruptcy Act, or under chapter 7 with a complaint to determine the dischargeability of the loan, the lender or holder must file that notice with the Secretary within 10 days of the lender or holder's initial date of receipt, as documented by a date stamp. If the borrower is declaring bankruptcy under chapter 7 of the Bankruptcy Act, and has not filed a complaint to determine the dischargeability of the loan, the lender or holder must file the written notice with the Secretary within 30 days of the lender's or holder's initial date of receipt, as documented by a date stamp. If the Secretary has not paid the claim at the time the lender or holder receives that notice, upon receipt of the notice, the lender or holder must file with the bankruptcy court a proof of claim, if applicable, and an objection to the discharge or compromise of the HEAL loan. If the Secretary has paid the claim, the lender or holder must file a statement with the court notifying it that the loan is owned by the Secretary.

(2) *Death claims.* A lender or holder must file a death claim with the Secretary within 30 days after the lender or holder obtains documentation that a borrower is dead. In addition to the documentation required for all claims, the lender or holder must submit with its death claim those documents which verify the death, including an official copy of the Death Certificate.

(3) *Disability claims.* A lender or holder must file a disability claim with the Secretary within 30 days after it has been notified that the Secretary has determined a borrower to be totally and permanently disabled. In addition to the documentation required for all claims, the lender or holder must submit with its claim evidence of the Secretary's determination that the borrower is totally and permanently disabled.

(4) *Bankruptcy claims.* For a bankruptcy under chapter 11 or 13 of the Bankruptcy Act, or a bankruptcy under chapter 7 of the Bankruptcy Act when the borrower files a complaint to determine the dischargeability of the HEAL loan, the current holder must file a claim with the Secretary within 10 days of the initial date of receipt of

court notice or written notice from the borrower's attorney that the borrower has filed for bankruptcy under chapter 11 or chapter 13, or has filed a complaint to determine the dischargeability of the HEAL loan under chapter 7. The initial date of receipt of the written notice must be documented by a date stamp. The lender or holder must file with the bankruptcy court a proof of claim, if applicable, and an objection to the discharge or compromise of the HEAL loan. In addition to the documentation required for all claims, with its claim the lender or holder must submit to the Secretary at least the following:

(i) Repayment schedule(s);

(ii) A collection history, if any;

(iii) A proof of claim, where applicable;

(iv) An assignment to the United States of America of its proof of claim, where applicable;

(v) All pertinent documents sent to or received from the bankruptcy court; and

(vi) A statement of any facts of which the lender is aware that may form the basis for an objection to the bankrupt's discharge or an exception to the discharge.

(vii) The notice of the first meeting or creditors, or an explanation as to why this is not included;

(viii) In cases where there is defective service, a declaration or affidavit attesting to the fact that the lender or holder was not directly served with the notice of meeting of creditors. This declaration or affidavit must also indicate when and how the lender or holder learned of the bankruptcy; and

(ix) In cases where there is defective service due to the borrower's failure to list the proper creditor, a copy of the letter sent to the borrower at the time of purchase of the HEAL loan by the current holder, or a sample letter with documentation indicating when the letter was sent to the borrower.

(Approved by the Office of Management and Budget under control numbers 0915–0036 and 0915–0108)

[48 FR 38988, Aug. 26, 1983, as amended at 52 FR 750, Jan. 8, 1987; 56 FR 42701, Aug. 29, 1991; 57 FR 28798, June 29, 1992]

§ 60.41 Determination of amount of loss on claims.

(a) *General rule.* HEAL insurance covers the unpaid balance of principal and interest on an eligible HEAL loan, less the amount of any judgment collected pursuant to default proceedings commenced by the eligible lender or holder involved. In determining whether to approve an insurance claim for payment, the Secretary considers legal defects affecting the initial validity or insurability of the loan. The Secretary also deducts from a claim any amount that is not a legally enforceable obligation of the borrower except to the extent that the defense of infancy applies. The Secretary further considers whether all holders of the loan have complied with the requirements of the HEAL regulations, including those concerned with the making, servicing, and collecting of the loan, the timely filing of claims, and the submission of documents with a claim.

(b) *Special rules for loans acquired by assignment.* If a claim is filed by a lender or holder that obtained a loan by assignment, that lender or holder is not entitled to any payment under this section greater than that to which a previous holder would have been entitled. In particular, the Secretary deducts from the claim any amounts that are attributable to payments made by the borrower to a prior holder of the loan before the borrower received proper notice of the assignment of the loan.

(c) *Special rules for loans made by school lenders.* (1) If the loan for which a claim is filed was originally made by a school and the claim is filed by that school, the Secretary deducts from the claim an amount equal to any unpaid refund that the school owes the borrower.

(2) If the loan for which a claim is filed was originally made by a school but the claim is filed by another lender of holder that obtained the note by assignment, the Secretary deducts from the claim an amount equal to any unpaid refund that the school owed the borrower prior to the assignment.

(d) *Circumstances under which defects in claims may be cured or excused.* The Secretary may permit a lender or holder to cure certain defects in a specified manner as a condition for payment of a

default claim. The Secretary may excuse certain defects if the holder submitting the default claim satisfies the Secretary that the defect did not contribute to the default or prejudice the Secretary's attempt to collect the loan from the borrower. The Secretary may also excuse certain defects if the defect arose while the loan was held by another lender or holder and the holder submitting the default claim satisfies the Secretary that the assignment of the loan was an arm's length transaction, that the present holder did not know of the defect at the time of the sale and that the present holder could not have become aware of the defect through an examination of the loan documents.

(e) *Payment of insured interest.* The payment on an approved claim covers the unpaid principal balance and interest that accrues through the date the claim is paid, except:

(1) If the lender or holder failed to submit a claim within the required period after the borrower's default; death; total and permanent disability; or filing of a petition in bankrupty under chapter 11 or 13 of the Bankruptcy Act, or under chapter 7 where the borrower files a complaint to determine the dischargeability of the HEAL loan; the Secretary does not pay interest that accrued between the end of that period and the date the Secretary received the claim.

(2) If the Secretary returned the claim to the lender or holder for additional documentation necessary for the approval of the claim, the Secretary pays interest only for the first 30 days following the return of the claim to the lender or holder.

[48 FR 38988, Aug. 26, 1983, as amended at 56 FR 42702, Aug. 29, 1991; 57 FR 28798, June 29, 1992]

§ 60.42 Records, reports, inspection, and audit requirements for HEAL lenders and holders.

(a) *Records.* (1) A lender or holder must keep complete and accurate records of each HEAL loan which it holds. The records must be organized in a way that permits them to be easily retrievable and allows the ready identification of the current status of each loan. The required records include:

(i) The loan application;

(ii) The original promissory note;

(iii) The repayment schedule agreement;

(iv) Evidence of each disbursement of loan proceeds;

(v) Notices of changes in a borrower's address and status as a full-time student;

(vi) Evidence of the borrower's eligibility for a deferment;

(vii) The borrower's signed statement describing his or her rights and responsibilities in connection with a HEAL loan;

(viii) The documents required for the exercise of forbearance;

(ix) Documentation of the assignment of the loan; and

(x) Evidence of a borrower's creditworthiness, including the borrower's credit report.

(2) The lender or holder must maintain for each borrower a payment history showing the date and amount of each payment received on the borrower's behalf, and the amounts of each payment attributable to principal and interest. A lender or holder must also maintain for each loan a collection history showing the date and subject of each communication with a borrower or endorser for collection of a delinquent loan. Furthermore, a lender or holder must keep any additional records which are necessary to make any reports required by the Secretary.

(3) A lender or holder must retain the records required for each loan for not less than 5 years following the date the loan is repaid in full by the borrower. However, in particular cases the Secretary may require the retention of records beyond this minimum period. A lender or holder must keep the original copy of an unpaid promissory note, but may store all other records in microform or computer format.

(4) The lender or holder must maintain accurate and complete records on each HEAL borrower and related school activities required by the HEAL program. All HEAL records shall be maintained under security and protected from fire, flood, water leakage, other environmental threats, electronic data system failures or power fluctuations, unauthorized intrusion for use, and theft.

(b) *Reports.* A lender or holder must submit reports to the Secretary at the time and in the manner required by the Secretary.

(c) *Inspections.* Upon request, a lender or holder must afford the Secretary, the Comptroller General of the United States, and any of their authorized representatives access to its records in order to assure the correctness of its reports.

(d) The lender or holder must comply with the Department's biennial audit requirements of section 705 of the Act.

(e) Any lender or holder who has information which indicates potential or actual commission of fraud or other offenses against the United States, involving these loan funds, must promptly provide this information to the appropriate Regional Office of Inspector General for Investigations.

(Approved by the Office of Management and Budget under control numbers 0915–0043 and 0915–0108)

[48 FR 38988, Aug. 26, 1983, as amended at 52 FR 750, Jan. 8, 1987; 57 FR 28798, June 29, 1992]

§ 60.43 Limitation, suspension, or termination of the eligibility of a HEAL lender or holder.

(a) The Secretary may limit, suspend, or terminate the eligibility under the HEAL program of an otherwise eligible lender or holder that violates or fails to comply with any provision of title VII, part A, subpart I of the Act as amended (42 U.S.C. 292–292p), these regulations, or agreements with the Secretary concerning the HEAL program. Prior to terminating a lender or holder's participation in the program, the Secretary will provide the entity an opportunity for a hearing in accordance with the procedures under paragraph (b) of this section.

(b) The Secretary will provide any lender or holder subject to termination with a written notice, sent by certified mail, specifying his or her intention to terminate the lender or holder's participation in the program and stating that the entity may request, within 30 days of the receipt of this notice, a formal hearing. if the entity requests a hearing, it must, within 90 days of the receipt of the notice, submit material, factual issues in dispute to demonstrate that there is cause for a hearing. These issues must be both substantive and relevant. The hearing will be held in the Washington, DC metropolitan area. The Secretary will deny a hearing if:

(1) The request for a hearing is untimely (i.e., fails to meet the 30-day requirement);

(2) The lender or holder does not provide a statement of material, factual issues in dispute within the 90-day required period; or

(3) The statement of factual issues in dispute is frivolous or inconsequential.

In the event that the Secretary denies a hearing, the Secretary will send a written denial, by certified mail, to the lender or holder setting forth the reasons for denial. If a hearing is denied, or if as a result of the hearing, termination is still determined to be necessary, the lender or holder will be terminated from participation in the program. An entity will be permitted to reapply for participation in the program when it demonstrates, and the Secretary agrees, that it is in compliance with all HEAL requirements.

(c) This section does not apply to a determination that a HEAL lender fails to meet the statutory definition of an ''eligible lender.''

(d) This section also does not apply to administrative action by the Department of Health and Human Services based on any alleged violation of:

(1) Title VI of the Civil Rights Act of 1964, which is governed by 45 CFR part 80;

(2) Title IX of the Education Amendments of 1972, which is governed by 45 CFR part 86;

(3) The Family Educational Rights and Privacy Act of 1974 (section 438 of the General Education Provisions Act, as amended), which is governed by 34 CFR part 99; or

(4) Title XI of the Right to Financial Privacy Act of 1978, Pub. L. 95–630 (12 U.S.C. 3401–3422).

(Approved by the Office of Management and Budget under control number 0915–0144)

[48 FR 38988, Aug. 26, 1983, as amended at 57 FR 28799, June 29, 1992; 58 FR 67349, Dec. 21, 1993]

Subpart E—The School

§ 60.50 Which schools are eligible to be HEAL schools?

(a) In order to participate in the HEAL program, a school must enter into a written agreement with the Secretary. In the agreement, the school promises to comply with provisions of the HEAL law and the HEAL regulations. For initial entry into this agreement and for the agreement to remain in effect, a school must satisfy the following requirements:

(1) The school must be legally authorized within a State to conduct a course of study leading to one of the following degrees:

Doctor of Medicine
Doctor of Osteopathic Medicine
Doctor of Dentistry or equivalent degree
Bachelor or Master of Science in Pharmacy or equivalent degree
Doctor of Optometry or equivalent degree
Doctor of Veterinary Medicine or equivalent degree
Doctor of Podiatric Medicine or equivalent degree
Graduate or equivalent degree in Public Health
Doctor of Chiropractic or equivalent degree
Doctoral degree of Clinical Psychology
Masters or doctoral degree in Health Administration

For the purposes of this section, the term ''State'' includes, in addition to the several States, the District of Columbia, the Commonwealth of Puerto Rico, the Commonwealth of the Northern Mariana Islands, the Virgin Islands, Guam, American Samoa, the Trust Territory of the Pacific Islands (the Republic of Palau), the Republic of the Marshall Islands, and the Federated States of Micronesia.

(2)(i) The school must be accredited by a recognized agency approved for that course of study by the Secretary of Education, as described in paragraph (a)(2)(ii) of this section, except where a school is not eligible for accreditation solely because it is too new. A new school is eligible if the Secretary of Education determines that it can reasonably expect to be accredited before the beginning of the academic year following the normal graduation date of its first entering class. The Secretary of Education makes this determination after consulting with the appropriate accrediting agency and receiving reasonable assurance to that effect.

(ii) The approved accrediting agencies are:

(A) Liaison Committee on Medical Education.

(B) American Osteopathic Association.

(C) Commission on Dental Accreditation.

(D) Council on Education of American Veterinary Medical Association.

(E) Council on Optometric Education.

(F) Council on Podiatric Medical Education.

(G) American Council on Pharmaceutical Education.

(H) Council on Education for Public Health.

(I) Council on Chiropractic Education.

(J) Accrediting Commission on Education for Health Services Administration.

(K) Committee on Accreditation of American Psychological Association.

(b) If a HEAL school undergoes a change of controlling ownership or form of control, its agreement automatically expires at the time of that change. The school must enter into a new agreement with the Secretary in order to continue its participation in the HEAL program.

[48 FR 38988, Aug. 26, 1983, as amended at 52 FR 751, Jan. 8, 1987; 57 FR 28799, June 29, 1992]

§ 60.51 The student loan application.

When the student completes his or her portion of the student loan application and submits it to the school, the school must do the following:

(a) Accurately and completely fill out its portion of the HEAL application;

(b) Verify, to the best of its ability, the information provided by the student on the HEAL application, including, but not limited to, citizenship status and Social Security number. To comply with this requirement, the school may request that the student provide a certified copy of his or her birth certificate, his or her naturalization papers, and an original Social Security card or copy issued by the Federal Government, or other documentation that the school may require. The school must assure that the applicant's

I–151 or I–551 is attached to the application, if the applicant is required to possess such identification by the United States;

(c) Certify that the student is eligible to receive a HEAL loan, according to the requirements of § 60.5;

(d) Review the financial aid transcript from each institution previously attended by the applicant on at least a half-time basis to determine whether the applicant is in default on any loans or owes a refund on any grants. The school may not approve the HEAL application or disburse HEAL funds if the borrower is in default on any loans or owes a refund on any educational grants, unless satisfactory arrangements have been made between the borrower and the affected lender or school to resolve the default or the refund on the grant. If the financial aid transcript has been requested, but has not been received at the time the applicant submits his or her first HEAL application, the school may approve the application and disburse the first HEAL installment prior to receipt of the transcript. Each financial aid transcript must include at least the following data:

(1) Student's name;

(2) Amounts and sources of loans and grants previously received by the student for study at an institution of higher education;

(3) Whether the student is in default on any of these loans, or owes a refund on any grants;

(4) Certification from each institution attended by the student that the student has received no financial aid, if applicable; and

(5) From each institution attended, the signature of an official authorized by the institution to sign such transcripts on behalf of the institution.

(e) State that it has no reason to believe that the borrower may not be willing to repay the HEAL loan;

(f) Make reasonable determinations of the maximum loan amount approvable, based on the student's circumstances. The student applicant determines the amount he or she wishes to borrow, up to this maximum amount. Only then may the school certify an eligible application. In determining the maximum loan amount approvable, the school will calculate the difference between:

(1) The total financial resources available to the applicant for his or her costs of education for the period covered by the proposed HEAL loan, and other student aid that the applicant has received or will receive during the period covered by the proposed HEAL loan. To determine the total financial resources available to the applicant for his or her costs of education for the period covered by the proposed HEAL loan (including familial, spousal, or personal income or other financial assistance that the applicant has received or will receive), the school must consider information provided through one of the national need analysis systems or any other procedure approved by the Secretary of Education, in addition to any other information which the school has regarding the student's financial situation. The school may make adjustments to the need analysis information only when necessary to accurately reflect the applicant's actual resources, and must maintain in the borrower's record documentation to support the basis for any adjustments to the need analysis information; and

(2) The costs reasonably necessary for each student to pursue the same or similar curriculum or program within the same class year at the school for the period covered by the proposed HEAL loan, using a standard student budget. The school must maintain in its general office records the criteria used to develop each standard student budget. Adjustments to the standard student budget may be made only to the extent that they are necessary for the student to complete his or her education, and documentation must be maintained in the borrower's record to support the basis for any adjustments to the standard student budget.

(g) Comply with the requirements of § 60.61.

(Approved by the Office of Management and Budget under control numbers 0915–0038 and 0915–0108)

[52 FR 751, Jan. 8, 1987, as amended at 57 FR 28799, June 29, 1992]

§ 60.52 The student's loan check.

(a) When a school receives from a HEAL lender a loan disbursement

check or draft payable jointly to the school and to one of its students, it must:

(1) If the school receives the instrument after the student is enrolled, obtain the student's endorsement, retain that portion of funds due the school, and disburse the remaining funds to the student.

(2) If the school receives the instrument before the student is enrolled, it must, prior to endorsing the instrument, send the instrument to the student to endorse and return to the school. The school may then retain that portion of funds then due the school but must hold the remaining funds for disbursement to the student at the time of enrollment. However, if the student is unable to meet other educational expenses due before the time of enrollment, the school may obtain the student's endorsement and disburse to the student that portion of funds required to meet these other educational expenses.

(b) If a school determines that a student does not plan to enroll, the school must return a loan disbursement check or draft to the lender within 30 days of this determination.

[48 FR 38988, Aug. 26, 1983, as amended at 52 FR 751, Jan. 8, 1987]

§ 60.53 Notification to lender or holder of change in enrollment status.

Each school must notify the holder of a HEAL loan of any change in the student's enrollment status within 30 days following the change in status. Each notice must contain the student's full name under which the loan was received, the student's current name (if different), the student's Social Security number, the date of the change in the enrollment status, or failure to enroll as scheduled for any academic period as a full-time student, the student's latest known permanent and temporary addresses, and other information which the school may decide is necessary to identify or locate the student. If the school does not know the identity of the current holder of the HEAL loan, it must notify the HEAL Program Office of a change in the student's enrollment status. This notification is not required for vacation periods and leaves of absence or other temporary interruptions which do not exceed one academic term.

(Approved by the Office of Management and Budget under control number 0915–0108)

[52 FR 751, Jan. 8, 1987, as amended at 57 FR 28799, June 29, 1992]

§ 60.54 Payment of refunds by schools.

A participating school must pay that portion of a refund that is allocable to a HEAL loan directly to the original lender (or to a subsequent holder of the loan note, if the school has knowledge of the holder's identity). At the same time, the school must provide to the borrower written notice that it is doing so.

(Approved by the Office of Management and Budget under control number 0915–0108)

[48 FR 38988, Aug. 26, 1983, as amended at 57 FR 28799, June 26, 1992]

§ 60.55 Administrative and fiscal procedures.

Each school must establish and maintain administrative and fiscal procedures necessary to achieve the following objectives:

(a) Proper and efficient administration of the funds received from students who have HEAL loans;

(b) Protection of the rights of students under the HEAL program;

(c) Protection of the United States from unreasonable risk of loss due to defaults; and

(d) Compliance with applicable requirements for HEAL schools.

§ 60.56 Records.

(a) In addition to complying with the requirements of section 739(b) of the Act, each school must maintain an accurate, complete, and easily retrievable record with respect to each student who has a HEAL loan. The record must contain all of the following information:

(1) Student's name, address, academic standing and period of attendance;

(2) Name of the HEAL lender, amount of the loan, and the period for which the HEAL loan was intended;

(3) If a noncitizen, documentation of the student's alien registration status.

(4) Amount and source of other financial assistance received by the student

during the period for which the HEAL loan was made;

(5) Date the school receives the HEAL check or draft and the date it either gives it to the student or returns it to the lender (if the school is not the lender);

(6) Date the school disburses the loan to a student (if the school is the lender);

(7) Date the school signs the loan check or draft (if the school is a copayee);

(8) Amount of tuition, fees and other charges paid by the student to the school for the academic period covered by the loan and the dates of payment;

(9) Photocopy of each HEAL check or draft received by the student;

(10) Documentation of each entrance interview, including the date of the entrance interview and the signature of the borrower indicating that the entrance interview was conducted;

(11) Documentation of the exit interview, including the date of the exit interview and the signature of the borrower indicating that the exit interview was conducted, or documentation of the date that the school mailed exit interview materials to the borrower if the borrower failed to report for the exit interview;

(12) A photocopy made by the school of the borrower's I–151 or I–551, if the borrower is required to possess such identification by the United States, or other documentation, if obtained by the school, to verify citizenship status and Social Security number (e.g., a certified copy of the borrower's birth certificate or a photocopy made by the school of the borrower's original Social Security card or copy issued by the Federal government);

(13) Documentation of the calculations made which compare the financial resources of the applicant with the cost of his or her education at the school;

(14) Copy(s) of the borrower's financial aid transcript(s);

(15) The standard budget used for the student, and documentation to support the basis for any deviations made to the standard budget;

(16) Copies of all correspondence between the school and the borrower or between the school and the lender or its assignee regarding the loan;

(17) Copy of each form used by the school in connection with the loan; and

(18) Expected postgraduate destination of borrower.

(b) The school must maintain the record for not less than 5 years following the date the student graduates, withdraws or fails to enroll as a full-time student. The school may store the records in microform or computer format.

(c) The school must comply with the Department's biennial audit requirements of section 705 of the Act.

(d) The school must develop and follow written procedures for the receipt, verification of amount, and disbursement of HEAL checks or drafts. These procedures must be maintained in the school's policies and procedures manuals or other general office records.

(Approved by the Office of Management and Budget under control number 0915–0108)

[48 FR 38988, Aug. 26, 1983, as amended at 52 FR 751, Jan. 8, 1987; 57 FR 28799, June 29, 1992]

§ 60.57 Reports.

A school must submit reports to the Secretary at the times and in the manner the Secretary may reasonably prescribe. The school must retain a copy of each report for not less than 5 years following the report's completion, unless otherwise directed by the Secretary. A school must also make available to a HEAL lender or holder, upon the lender's or holder's request, the name, address, postgraduate destination and other reasonable identifying information for each of the school's students who has a HEAL loan.

(Approved by the Office of Management and Budget under control number 0915–0108)

[57 FR 28799, June 29, 1992]

§ 60.58 Federal access to school records.

For the purposes of audit and examination, a HEAL school must provide the Secretary of Health and Human Services, the Comptroller General of the United States, and any of their authorized representatives access to the records that the school is required to keep and to any documents and records

pertinent to the administration of the HEAL Program.

§ 60.59 Records and Federal access after a school is no longer a HEAL school.

In the event a school ceases to participate in the HEAL program, the school (or its successor, in the case of a school which undergoes a change in ownership) must retain all required HEAL records and provide the Secretary of Health and Human Services, the Comptroller General of the United States, and any of their authorized representatives access to them.

§ 60.60 Limitation, suspension, or termination of the eligibility of a HEAL school.

(a) The Secretary may limit, suspend, or terminate the eligibility under the HEAL program of an otherwise eligible school that violates or fails to comply with any provision of title VII, part A, subpart I of the Act as amended (42 U.S.C. 292–292p), these regulations, or agreements with the Secretary concerning the HEAL program. Prior to terminating a school's participation in the program, the Secretary will provide the school an opportunity for a hearing in accordance with the procedures under paragraph (b) of this section.

(b) The Secretary will provide any school subject to termination with a written notice, sent by certified mail, specifying his or her intention to terminate the school's participation in the program and stating that the school may request, within 30 days of the receipt of this notice, a formal hearing. If the school requests a hearing, it must, within 90 days of the receipt of the notice, submit material, factual issues in dispute to demonstrate that there is cause for a hearing. These issues must be both substantive and relevant. The hearing will be held in the Washington, DC metropolitan area. The Secretary will deny a hearing if:

(1) The request for a hearing is untimely (i.e., fails to meet the 30-day requirement);

(2) The school does not provide a statement of material, factual issues in dispute within the 90-day required period; or

(3) The statement of factual issues in dispute is frivolous or inconsequential.

In the event that the Secretary denies a hearing, the Secretary will send a written denial, by certified mail, to the school setting forth the reasons for denial. If a hearing is denied, or if as a result of the hearing, termination is still determined to be necessary, the school will be terminated from participation in the program. A school will be permitted to reapply for participation in the program when it demonstrates, and the Secretary agrees, that it is in compliance with all HEAL requirements.

(c) This section does not apply to a determination that a HEAL school fails to meet the statutory definition of an ''eligible school.''

(d) This section does not apply to administrative action by the Department of Health and Human Services based on any alleged violation of The Family Educational Rights and Privacy Act of 1974 (section 438 of the General Education Provisions Act, as amended), as governed by 34 CFR part 99.

(Approved by the Office of Management and Budget under control number 0915–0144)

[48 FR 38988, Aug. 26, 1983, as amended at 52 752, Jan. 8, 1987; 58 FR 67350, Dec. 21, 1993]

§ 60.61 Responsibilities of a HEAL school.

(a) A HEAL school is required to carry out the following activities for each HEAL applicant or borrower:

(1) Conduct and document an entrance interview with each student (individually or in groups) no later than prior to the loan recipient's first HEAL disbursement in each academic year that the loan recipient obtains a HEAL loan. The school must inform the loan recipient during the entrance interview of his or her rights and responsibilities under a HEAL loan, including the consequences for noncompliance with those responsibilities, and must gather personal information which would assist in locating the loan recipient should he or she depart from the school without receiving an exit interview. A school may meet this requirement through correspondence where the

school determines that a face-to-face meeting is impracticable.

(2) Conduct and document an exit interview with each HEAL loan recipient (individually or in groups) within the final academic term of the loan recipient's enrollment prior to his or her anticipated graduation date or other departure date from the school. The school must inform the loan recipient in the exit interview of his or her rights and responsibilities under each HEAL loan, including the consequences for noncompliance with those responsibilities. The school must also collect personal information from the loan recipient which would assist the school or the lender or holder in skiptracing activities and to direct the loan recipient to contact the lender or holder concerning specific repayment terms and options. A copy of the documentation of the exit interview, including the personal information collected for skiptracing activities, and any other information required by the Secretary regarding the exit interview must be sent to the lender or holder of each HEAL loan within 30 days of the exit interview. If the loan recipient departs from the school prior to the anticipated date or does not receive an exit interview, the exit interview information must be mailed to the loan recipient by the school within 30 days of the school's knowledge of the departure or the anticipated departure date, whichever is earlier. The school must request that the loan recipient forward any required information (e.g., skiptracing information, request for deferment, etc.) to the lender or holder. The school must notify the lender or holder of the loan recipient's departure at the same time it mails the exit interview material to the loan recipient.

(3) Verify the accuracy and completeness of information provided by each student on the HEAL loan application, particularly in regard to the HEAL eligibility requirements, by comparing the information with previous loan applications or other records or information provided by the student to the school. Notify the potential lender of any discrepancies which were not resolved between the school and the student.

(4) Develop and implement procedures relating to check receipt and release which keep these functions separate from the application preparation and approval process and assure that the amount of the HEAL loan check(s) does(do) not exceed the approved total amount of the loan and the statutory maximums. Checks must not be cashed without the borrower's personal endorsement. Documentation of these procedures and their usage shall be maintained by the school.

(5) Maintain accurate and complete records on each HEAL borrower and related school activities required by the HEAL program. All HEAL records shall be properly safeguarded and protected from environmental threats and unauthorized intrusion for use and theft.

(6) Maintain documentation of the criteria used to develop the school's standard student budgets in the school's general records, readily available for audit purposes, and maintain in each HEAL borrower's record a copy of the standard budget which was actually used in the determination of the maximum loan amount approvable for the student, as described in § 60.51.

(7) Notify the lender or its assignee of any changes in the student's name, address, status, or other information pertinent to the HEAL loan not more than 30 days after receiving information indicating such a change.

(b) Any school which has information which indicates potential or actual commission of fraud or other offenses against the United States involving these loan funds must promptly provide this information to the appropriate Regional Office of Inspector General for Investigations.

(c) The school will be considered responsible and the Secretary may seek reimbursement from any school for the amount of a loan in default on which the Secretary has paid an insurance claim, if the Secretary finds that the school did not comply with the applicable HEAL statute and regulations, or its written agreement with the Secretary. The Secretary may excuse certain defects if the school satisfies the Secretary that the defect did not contribute to the default or prejudice the Secretary's attempt to collect the loan from the borrower.

(d) A school is authorized to withhold services from a HEAL borrower who is in default on a HEAL loan received while enrolled in that school, except in instances where the borrower has filed for bankruptcy. Such services may include, but are not limited to academic transcripts and alumni services. Defaulted HEAL borrowers who have filed for bankruptcy shall provide court documentation that verifies the filing for bankruptcy upon the request of the school. Schools will also supply this information to the Secretary upon request. All academic and financial aid transcripts that are released on a defaulted HEAL borrower must indicate on the transcript that the borrower is in default on a HEAL loan. It is the responsibility of the borrower to provide the school with documentation from the lender, holder, or Department when a default has been satisfactorily resolved, in order to obtain access to services that are being withheld, or to have the reference to default removed from the academic and financial aid transcripts.

(Approved by the Office of Management and Budget under control number 0915–0108)

[52 FR 752, Jan. 8, 1987, as amended at 57 FR 28799, June 29, 1992; 58 FR 67350, Dec. 21, 1993]

SUBCHAPTER E—FELLOWSHIPS, INTERNSHIPS, TRAINING

PART 61—FELLOWSHIPS

Subpart A—Regular Fellowships

Sec.
61.1 Definitions.
61.2 Applicability.
61.3 Purpose of regular fellowships.
61.4 Establishment and conditions.
61.5 Qualifications.
61.6 Method of application.
61.7 Review of applications; committees; awards.
61.8 Benefits: Stipends; dependency allowances; travel allowances; vacation.
61.9 Payments: Stipends; dependency allowances; travel allowances.
61.10 Benefits: Tuition and other expenses.
61.11 Payments: Tuition and other expenses.
61.12 Accountability.
61.13 Duration and continuation.
61.14 Separate consideration of information concerning moral character or loyalty.
61.15 Moral character or loyalty; reference to Special Review Committee; review and recommendation.
61.16 Termination of or refusal to continue award on grounds relating to moral character or loyalty; hearing.
61.17 Termination on grounds other than those relating to moral character or loyalty.
61.18 Publications.
61.19 Copyright and reproduction.
61.20 Inventions or discoveries.
61.21 Interest.
61.22 Nondiscrimination.

Subpart B—Service Fellowships

61.30 Definitions.
61.31 Applicability.
61.32 Purpose of service fellowships.
61.33 Establishment of service fellowships.
61.34 Qualifications.
61.35 Method of application.
61.36 Selection and appointment of service fellows.
61.37 Stipends, allowances, and benefits.
61.38 Duration of service fellowships.

Subpart A—Regular Fellowships

AUTHORITY: Sec. 215, 58 Stat. 690, as amended, sec. 8, 77 Stat. 400; 42 U.S.C. 216, 1857g; secs. 301, 402, 58 Stat. 691, as amended, 707, secs. 412, 422, 62 Stat. 464, 598, sec. 433, 64 Stat. 444, as amended, sec. 308, 74 Stat. 364, sec. 444, 76 Stat. 1073, sec. 3, 77 Stat. 394, secs. 394, 395, 79 Stat. 1062; 42 U.S.C. 241, 282, 287a, 288a, 289c, 242f, 289g, 1857b, 280b–4, 280b–5.

SOURCE: 31 FR 12096, Sept. 16, 1966, unless otherwise noted.

§ 61.1 Definitions.

As used in this part:

(a) *Continuation award* is an award made by the Surgeon General, within the period of support recommended by a fellowship committee, without necessity for further action by the committee.

(b) *Noncitizen national* means any person who, though not a citizen of the United States, owes permanent allegiance to the United States.

(c) *Regular fellowship* means an award to support activity not requiring performance of services for the Public Health Service.

(d) *Surgeon General* means the Surgeon General of the U.S. Public Health Service or his delegate.

(e) *Continental United States* does not include Hawaii or Alaska.

§ 61.2 Applicability.

The regulations in this subpart apply to the establishment, award, and operation of all regular fellowships awarded under the Public Health Service Act and the Clean Air Act.

§ 61.3 Purpose of regular fellowships.

Regular fellowships are provided to encourage and promote:

(a) Research and training for research relating to (1) the physical and mental diseases and impairments of man, (2) the organization, provision, and financing of health services, (3) the causes, prevention, and control of air pollution, and (4) medical library and related health sciences and communication of information.

(b) Special scientific projects for the compilation of existing, or writing of original, contributions relating to scientific, social, or cultural advancements in sciences related to health.

§ 61.4 Establishment and conditions.

All regular fellowships in the Public Health Service shall be established by the Surgeon General. In establishing a fellowship or series of fellowships, the Surgeon General shall prescribe in

writing the conditions (in addition to those provided in the regulations in this part) under which the fellowships are to be awarded and held.

§61.5 Qualifications.

In order to qualify for a regular fellowship, an applicant must:

(a) Meet the Public Health Service requirements of general suitability, including professional and personal fitness.

(b) Have been accepted by a public or other nonprofit institution for the purpose of the activity for which the fellowship is sought.

(c) Be free from any disease or disability that would interfere with the accomplishment of the fellowship purpose.

(d) If a citizen or noncitizen national of the United States, sign and file with the Surgeon General the following statement:

> I do solemnly swear (or affirm) that I bear true faith and allegiance to the United States of America and will support and defend the Constitution and laws of the United States against all its enemies, foreign and domestic.

(e) Comply with such other requirements as may be prescribed by the Surgeon General.

§61.6 Method of application.

Application for a regular fellowship shall be made on forms prescribed by the Surgeon General. In addition to the information supplied by the applicant in his application, such further information may be required as is necessary to determine his qualifications and fitness.

§61.7 Review of applications; committees; awards.

The Surgeon General shall appoint one or more fellowship committees to examine the qualifications of applicants for fellowships and the merits of their proposals for research, training, or special scientific projects. A fellowship committee shall submit to the Surgeon General its recommendations concerning appointments. Awards of regular fellowships shall be made in writing by the Surgeon General.

§61.8 Benefits: Stipends; dependency allowances; travel allowances; vacation.

Individuals awarded regular fellowships shall be entitled to such of the following benefits as are authorized for the particular series of fellowship:

(a) Stipend.

(b) Dependency allowances.

(c) When authorized in advance, separate allowances for travel. Such allowances may not exceed amounts prescribed by the Surgeon General for

(1) Travel to the place where the fellow is to be located during the fellowship term, and

(2) Travel to return the fellow at the end of the fellowship term to his home or other place he left to carry out the fellowship, provided that (unless otherwise prescribed by the Surgeon General) such return travel is to or from a place outside the continental United States.

No allowances will be granted for shipping personal effects or household goods and no allowances will be granted for transporting dependents, except as authorized by the Surgeon General for travel undertaken by dependents (spouse and/or dependent children only) to or from a place outside the continental United States where the fellow is to be located during the fellowship term and for return from such place or except as otherwise prescribed by the Surgeon General for a particular series of fellowships.

(d) Vacation. Stipends and allowances will not be increased, or be paid beyond the term of a fellowship, on account of vacation an individual might have been entitled to but did not take.

§61.9 Payments: Stipends; dependency allowances; travel allowances.

Payments for stipends, dependency allowances, and the travel allowances specified in §61.8 may be made directly to the fellow or to the sponsoring institution for payment to the fellow.

§61.10 Benefits: Tuition and other expenses.

The Surgeon General may authorize allowances for payment of expenses, in whole or in part, of tuition, fees, equipment, supplies, attendance at meetings required to carry out the purposes of

the fellowship, or other expenses of the activities of the fellow.

§ 61.11 Payments: Tuition and other expenses.

(a) *Tuition and fees.* Allowances for tuition and fees may be made to the fellow or sponsoring institution.

(b) *Other expenses; standard or maximum allowances.* Any allowances for equipment, supplies, attendance at meetings, and other expenses shall, except as may otherwise be prescribed herein or by the Surgeon General, be paid to the sponsoring institution. The Surgeon General may establish a standard allowance or a maximum allowance for payment to the sponsoring institution for such expenses.

(c) *Attendance at meetings—fellows sponsored by Federal agencies.* Allowances for expenses of attendance at meetings by fellows who are sponsored by Federal agencies may be paid directly to such fellows.

(d) *Installments.* Payments to sponsoring institutions and to fellows under this section or under § 61.9 may be made in advance or by way of reimbursement and, except as may otherwise be prescribed by the Surgeon General, in monthly installments.

§ 61.12 Accountability.

Payments shall be subject to such requirements relating to accountability as may be specified by the Surgeon General.

§ 61.13 Duration and continuation.

An award period may be any period not in excess of 2 years. The Surgeon General may make one or more continuation awards for an additional period upon a finding of satisfactory progress toward accomplishment of the purposes of the initial fellowship award. Additional support may be provided on appropriate justification after expiration of the period of support involved in the previous award.

§ 61.14 Separate consideration of information concerning moral character or loyalty.

No information in the records or possession of the Public Health Service concerning the moral character or loyalty of a fellow will be made available to any fellowship committee involved in recommending appointments of fellows.

§ 61.15 Moral character or loyalty; reference to Special Review Committee; review and recommendation.

(a) *Moral character or loyalty; reference to Special Review Committee.* Whenever the Surgeon General has substantial evidence with respect to any fellow (1) that the statement filed pursuant to § 61.5(d) was not made in good faith; or (2) that a fellow has (i) been convicted of a crime involving moral turpitude or (ii) engaged in conduct involving moral turpitude (unless in the case of either paragraph (a)(2) (i) or (ii) of this section, it is established that the fellow is, nevertheless, then a person of good moral character), the Surgeon General shall refer the pertinent records to a Special Review Committee established as prescribed in paragraph (b) of this section.

(b) *Special Review Committee; composition.* The Special Review Committee shall be composed of a representative of the Office of the Surgeon General designated by the Surgeon General as chairman but nonvoting member, the appropriate Associate Director or comparable official of the bureau involved, the Chief of the Division of Research Grants, the Director of the Institute or the Chief of the Division which awarded the fellowship in question, or their delegates, and two additional members appointed by the Surgeon General.

(c) *Information; supplementation.* The Committee may supplement the information referred to it by such correspondence, personal interviews, or other informal methods as necessary in order to make its recommendation as provided in paragraph (d) of this section.

(d) *Review and recommendation.* The Committee shall review the pertinent records, determine whether there is substantial reason to believe that the award should be terminated or not continued either on grounds relating to moral character or on the ground that the statement filed pursuant to § 61.5(d) was not made in good faith, and make its recommendation to the Surgeon

General in writing, with reasons therefor, accordingly.

§61.16 Termination of or refusal to continue award on grounds relating to moral character or loyalty; hearing.

If, after review of the recommendation of the Special Review Committee, the Surgeon General believes that the award should be terminated or should not be continued, he shall notify the fellow and sponsoring institution in writing that unless a request for a hearing is made by the fellow within 20 days after the fellow's receipt of such notice, his fellowship will be terminated or his application for continuation of the award denied. A copy of the regulations under this subpart and a copy of part 10 of title 45, Code of Federal Regulations, shall be enclosed with the notice. The notice shall set forth, as specifically as security permits, the grounds for the questions pertaining to moral character or loyalty. Any such request for a hearing shall be promptly submitted by the Surgeon General to the Chairman of the Departmental Fellowship Review Panel for handling in accordance with such part 10.

§61.17 Termination on grounds other than those relating to moral character or loyalty.

The Surgeon General may terminate a fellowship upon receipt from the fellow of a written request for termination. The Surgeon General shall terminate any fellowship prior to the date it would otherwise expire if he determines that the fellow's performance is unsatisfactory or that the fellow or the sponsoring institution is unfit or unable to carry out the purpose of the fellowship. The fellow and the sponsoring institution shall be notified in writing of such termination.

§61.18 Publications.

Publication, distribution, and disposition of all manuscripts and other materials resulting from a fellowship awarded hereunder shall be subject to the conditions that all such materials shall bear appropriate acknowledgment of Public Health Service support, that fellows shall furnish copies of such publications or other materials as may be requested by the Surgeon General, and to such other conditions as the Surgeon General may prescribe.

§61.19 Copyright and reproduction.

Where the work accomplished under a fellowship award results in a book or other copyrightable material, the author is free to copyright the work, but the Public Health Service reserves a royalty-free, nonexclusive, and irrevocable license to reproduce, publish, or otherwise use, and to authorize others to use, all copyrightable or copyrighted material resulting from the fellowship award.

§61.20 Inventions or discoveries.

Any fellowship award made hereunder is subject to the regulations of the Department of Health and Human Services set forth in title 45 CFR parts 6 and 8, as amended. Such regulations shall apply to any activity for which fellowship funds are in fact used, whether within the scope of the fellowship as approved or otherwise. Appropriate measures shall be taken by the fellow, the sponsoring institution, and the Surgeon General to assure that no contracts, assignments, or other arrangements inconsistent with the fellowship obligation are entered into or continued and that all personnel involved in the supported activity are aware of and comply with such obligation. Laboratory notes, related technical data and information pertaining to inventions or discoveries shall be maintained for such periods, and filed with or otherwise made available to the Surgeon General or those whom he may designate at such times and in such manner as he may determine necessary to comply with such Department regulations.

§61.21 Interest.

Any interest earned through deposit or investment by the sponsoring institution of funds paid pursuant to the provisions of this subpart shall be paid to the United States as such interest is received by the sponsoring institution.

§61.22 Nondiscrimination.

Attention is called to the fact that funds paid to a sponsoring institution

pursuant to § 61.11 in order to meet the expenses of the activities of a fellow are considered Federal financial assistance to such institution. The institution is thus subject in this respect to the prohibition against discrimination on the basis of race, color, or national origin imposed by title VI, Civil Rights Act of 1964, and the implementing Regulation of the Department of Health and Human Services (45 CFR part 80).

Subpart B—Service Fellowships

AUTHORITY: 42 U.S.C. 209, 210, 216.

SOURCE: 31 FR 12098, Sept. 16, 1966, unless otherwise noted.

§ 61.30 Definitions.

As used in this part:

Continental United States does not include Hawaii or Alaska.

Secretary means the Secretary of Health and Human Services and any other officer or employee of the Department of Health and Human Services to whom the authority involved may be delegated.

Service Fellowship is one which requires the performance of services, either full or part time, for the Public Health Service.

[63 FR 9950, Feb. 27, 1998]

§ 61.31 Applicability.

The regulations in this part apply to the establishment of service fellowships in the Public Health Service, the designation of persons to receive such fellowships, and the appointment of service fellows under authority of section 207(g) of the Public Health Service Act.

§ 61.32 Purpose of service fellowships.

Service fellowships in the Public Health Service are for the purpose of encouraging and promoting research, studies, and investigations related to health. Such fellowships may be provided to secure the services of talented scientists for a period of limited duration for health-related research, studies, and investigations where the nature of the work or the character of the individual's services render customary employing methods impracticable or less effective.

§ 61.33 Establishment of service fellowships.

All service fellowships shall be established by the Secretary. In establishing a service fellowship, or a series of service fellowships, the Secretary shall prescribe in writing the conditions (in addition to those provided in the regulations in this part) under which service fellows will be appointed and will hold their fellowships.

[63 FR 9950, Feb. 27, 1998]

§ 61.34 Qualifications.

Scholastic and other qualifications shall be prescribed by the Secretary for each service fellowship, or series of service fellowships. Each individual appointed to a service fellowship shall:

(a) Have presented satisfactory evidence of general suitability, including professional and personal fitness; and

(b) Possess any other qualifications as reasonably may be prescribed.

[63 FR 9950, Feb. 27, 1998]

§ 61.35 Method of application.

Application for a service fellowship shall be made in accordance with procedures established by the Secretary.

[63 FR 9950, Feb. 27, 1998]

§ 61.36 Selection and appointment of service fellows.

The Secretary shall:

(a) Prescribe a suitable professional and personal fitness review and an examination of the applicant's qualifications;

(b) Designate in writing persons to receive service fellowships; and

(c) Establish procedures for the appointment of service fellows.

[63 FR 9950, Feb. 27, 1998]

§ 61.37 Stipends, allowances, and benefits.

(a) *Stipends.* Service fellows shall be entitled to such stipend as is authorized by the Secretary for each service fellowship or series of service fellowships.

(b) *Travel and transportation allowances.* Under conditions prescribed by the Secretary, an individual appointed as a service fellow may be authorized

personal travel allowances or transportation and per diem, travel allowances or transportation for his or her immediate family, and transportation of household goods and personal effects, in conjunction with travel authorized by the Secretary.

(1) From place of residence, within or outside the continental United States, to first duty station,

(2) For any change of duty station ordered by the Service during the term of the fellowship, and

(3) From last duty station to the place of residence which he left to accept the fellowship, or to some other place at no greater cost to the Government.

(4) A service fellow shall be entitled to travel allowances or transportation and per diem while traveling on official business away from his or her permanent duty station during the term of the fellowship. Except as otherwise provided herein, a service fellow shall be entitled to travel and transportation allowances authorized in this part at the same rates as may be authorized by law and regulations for other civilian employees of the Public Health Service. If a service fellow dies during the term of a fellowship, and the place of residence that was left by the service fellow to accept the fellowship was outside the continental United States, the payment of expenses of preparing the remains for burial and transporting them to the place of residence for interment may be authorized. In the case of deceased service fellows whose place of residence was within the continental United States, payment of the expenses of preparing the remains and transporting them to the place of residence for interment may be authorized as provided for other civilian employees of the Public Health Service.

(c) *Benefits*. In addition to other benefits provided herein, service fellows shall be entitled to benefits as provided by law or regulation for other civilian employees of the Public Health Service.

(d) *Training*. Service fellows are eligible for training at Government expense on the same basis as other civilian employees.

[31 FR 12098, Sept. 16, 1966, as amended at 63 FR 9950, Feb. 27, 1998]

§ 61.38 Duration of service fellowships.

Initial appointments to service fellowships may be made for varying periods not in excess of 5 years. Such an appointment may be extended for varying periods not in excess of 5 years for each period in accordance with procedures and requirements established by the Secretary.

[63 FR 9951, Feb. 27, 1998]

PART 62—NATIONAL HEALTH SERVICE CORPS SCHOLARSHIP AND LOAN REPAYMENT PROGRAMS

Subpart A—National Health Service Corps Scholarship Program

Sec.

62.1 What is the scope and purpose of the National Health Service Corps scholarship program?
62.2 Definitions.
62.3 Who is eligible to apply for a scholarship program award?
62.4 To whom will scholarship program awards be available in addition to those individuals pursuing courses of study leading to degrees in medicine, osteopathy or dentistry?
62.5 How is application made for a scholarship program award?
62.6 How will individuals be selected to participate in the scholarship program?
62.7 What will an individual be awarded for participating in the scholarship program?
62.8 What does an individual have to do in return for the scholarship program award?
62.9 Under what circumstances can the period of obligated service be deferred to complete approved graduate training?
62.10 What will happen if an individual does not comply with the terms and conditions of participating in the scholarship program?
62.11 When can a scholarship program payment obligation be discharged in bankruptcy?
62.12 Under what circumstances can the service or payment obligation be canceled, waived or suspended?
62.13 What are the limitations on the receipt of concurrent benefits?
62.14 What are the special provisions relating to recipients of awards under the PH/NHSC scholarship training program who will also receive awards under the scholarship program?

Subpart B—National Health Service Corps Loan Repayment Program

62.21 What is the scope and purpose of the National Health Service Corps Loan Repayment Program?
62.22 Definitions.
62.23 How will individuals be selected to participate in the Loan Repayment Program?
62.24 Who is eligible to apply for the Loan Repayment Program?
62.25 What does the Loan Repayment Program provide?
62.26 What does an individual have to do in return for loan repayments received under the Loan Repayment Program?
62.27 What will happen if an individual does not comply with the terms and conditions of participation in the Loan Repayment Program?
62.28 Under what circumstances can the service or payment obligation be canceled, waived or suspended?
62.29 Under what circumstances can the Loan Repayment Program obligation be discharged in bankruptcy?
62.30 What other regulations and statutes apply?

Subpart C—Grants for State Loan Repayment Programs

62.51 What is the scope and purpose of the State Loan Repayment Program?
62.52 Definitions.
62.53 Who is eligible for this program?
62.54 What must applications for the State Loan Repayment Program contain?
62.55 What State Program Elements are required to ensure similarity with the NHSC Loan Repayment Program?
62.56 How are the Federal grant funds and State matching funds to be used under this program?
62.57 How will States be selected to participate in this program?
62.58 What other regulations apply?

Subpart D—Special Repayment Program

62.71 What is the scope and purpose of the Special Repayment Program?
62.72 Definitions.
62.73 What are the procedures for participation in the Special Repayment Program?
62.74 How much credit will a Program participant receive for monetary repayments made, or approved service performed, before beginning service under the Special Repayment Program?
62.75 Will individuals serving under the Special Repayment Program receive credit for partial service?
62.76 How will amounts of money due under the option under section 204(c)(1) of Public Law 100–177 be required to be repaid?

AUTHORITY: Sec. 215 of the Public Health Service Act, 58 Stat. 690, as amended, 63 Stat. 35 (42 U.S.C. 216); sec. 751 of the Public Health Service Act, 90 Stat. 2281 (42 U.S.C. 294t), unless otherwise noted.

SOURCE: 45 FR 55429, Aug. 20, 1980, unless otherwise noted.

Subpart A—National Health Service Corps Scholarship Program

§ 62.1 What is the scope and purpose of the National Health Service Corps scholarship program?

These regulations apply to the award of scholarships under the National Health Service Corps Scholarship Program authorized by section 751 of the Public Health Service Act (42 U.S.C. 294t) to students receiving academic training in medicine, osteopathy, dentistry, and other health professions. The purpose of this program is to assure an adequate supply of trained health professionals for the National Health Service Corps which is used by the Secretary to improve the delivery of health services in health manpower shortage areas.

§ 62.2 Definitions.

As used in this part:

Acceptable level of academic standing means the level at which a full-time student retains eligibility to continue in attendance in school under the school's standards and practices.

Act means the Public Health Service Act, as amended.

Approved graduate training means those programs of graduate training in medicine, osteopathy, dentistry or other health professions which (a) lead to eligibility for board certification or which provide other evidence of completion, and (b) have been approved by the appropriate health professions body as determined by the Secretary.

Full-time student means an individual pursuing a course of study leading to a degree in medicine, osteopathy, dentistry or an equivalent credential for a particular health profession who is enrolled for a sufficient number of credit hours in any academic term to complete the course of study within not more than the number of academic terms normally required at the school.

If an individual is enrolled in a school and is pursuing a course of study which is designed to be completed in more than 4 years, the individual will be considered a full-time student for only the last 4 years of the course of study.

Health manpower shortage area means the geographic area, the population group, the public or nonprofit private medical facility, or other public facility which has been determined by the Secretary to have a shortage of health manpower under section 332 of the Act and its implementing regulations (42 CFR part 5).

National of the United States means a citizen of the United States or a person who, though not a citizen of the United States, owes permanent allegiance to the United States.

Public Health and National Health Service Corps Scholarship Training Program, or *PH/NHSC Scholarship Training Program*, means the program authorized by section 225 of the Act as in effect on September 30, 1977, and repealed on October 1, 1977.

Scholarship Program means the National Health Service Corps Scholarship Program authorized by section 751 of the Act (42 U.S.C. 294t).

Scholarship Program participant or *participant* means an individual whose application to the Scholarship Program has been approved and whose contract has been accepted and signed by the Secretary.

School means a school of medicine, osteopathy, dentistry, or other health profession which (a) provides training leading to a degree of doctor of medicine, doctor of osteopathy, doctor of dentistry, or an equivalent credential for a particular health profession, and (b) which is accredited by a body or bodies recognized for accreditation purposes by the Secretary of Education.

School year means all or part of the 12-month period from July 1 through June 30 during which an applicant is enrolled in a school as a full-time student.

Service means the United States Public Health Service.

Secretary means the Secretary of Health and Human Services and any other officer or employee of the Department of Health and Human Services to whom the authority involved has been delegated.

State means one of the several States, the District of Columbia, the Commonwealth of Puerto Rico, the Northern Mariana Islands, the Virgin Islands, Guam, American Samoa, and the Trust Territory of the Pacific Islands.

§ 62.3 Who is eligible to apply for a scholarship program award?

(a) To be eligible for a scholarship under this part an applicant must:

(1) Be accepted for enrollment, or be enrolled, as a full-time student in a school located in a State;

(2) Be pursuing a course of study or program offered by the school leading to a degree in medicine, osteopathy, dentistry, or an equivalent credential for a particular health profession;

(3) Be eligible for, or hold, an appointment as a commissioned officer in the Regular or Reserve Corps of the Service or be eligible for selection for civilian service in the National Health Service Corps;

(4) Be a National of the United States; and

(5) Submit an application to participate in the Scholarship Program together with a signed contract as described in section 751(f) of the Act.

(b) Any applicant who owes an obligation for professional practice to a State or other entity under an agreement entered into before filing an application under this part is ineligible for an award unless a written statement satisfactory to the Secretary is submitted from the State or entity that (1) there is no potential conflict in fulfilling the service obligation to the State or entity and the Scholarship Program, and that (2) the Scholarship Program service obligation will be served before the service obligation for professional practice owed to the State or entity.

(c) Any individual who receives a scholarship under the Indian Health Service Scholarship Program (section 757 of the Act) or the Scholarship Program for First-Year Students of Exceptional Financial Need (section 758 of the Act) is ineligible to participate in the Scholarship Program during the

School year(s) for which the scholarships under sections 757 or 758 of the Act were awarded.

§ 62.4 To whom will scholarship program awards be available in addition to those individuals pursuing courses of study leading to degrees in medicine, osteopathy, or dentistry?

The Secretary will, from time-to-time, publish in the FEDERAL REGISTER a list of those health professions in addition to medicine, osteopathy, and dentistry for which the National Health Service Corps has need and for which support is available. The Secretary will also publish any other eligibility criteria, in addition to those in § 62.3, that may be required to assure that participants can be utilized during their periods of obligated service in a manner that will best meet the needs of the National Health Service Corps.

§ 62.5 How is application made for a scholarship program award?

Each individual desiring a scholarship under this part must submit an application (including a signed contract as required under section 751(f) of the Act) in the form and at the time prescribed by the Secretary.

§ 62.6 How will individuals be selected to participate in the scholarship program?

(a) *General.* In deciding which applications for participation in the Scholarship Program will be approved, the Secretary will place the applications into categories based upon the selection priorities described in paragraph (b) of this section. Except for continuation awards (see paragraph (e) of this section) the Secretary will then evaluate each applicant under paragraph (c) of this section.

(b) *Priorities.* (1) First priority will be given to individuals who have previously received a scholarship under the PH/NHSC Scholarship Training Program, a scholarship under this Scholarship Program, or a scholarship under section 758 of the Act, authorizing scholarships for first-year students of exceptional financial need. (2) Second priority will be given to applicants who are entering their first year of study.

(c) *Selection.* (1) In selecting participants, the Secretary will take into consideration those factors which he or she determines necessary to assure effective participation in the Scholarship Program. These factors may include, but not be limited to (i) work experience, (ii) community background, (iii) career goals, (iv) faculty recommendation, and (v) academic performance.

(2) Special consideration will be given to (i) medical and osteopathic students who indicate their intention to enter family practice, internal medicine, pediatrics, or osteopathic general practice residencies, (ii) dental students who indicate their intention to undertake general practice training following graduation or who plan no postgraduate training, and (iii) those individuals who indicate an intent to pursue other types of clinical practice or specialized training for which the National Health Service Corps has a particular need.

(d) *Duration of Scholarship award.* Subject to the availability of funds for the Scholarship Program, the Secretary will award a participant a scholarship under this part for a period of 1 school year.

(e) *Continuation awards.* Subject to the availability of funds for the Scholarship Program, the Secretary will award a continuation scholarship if (1) the participant requests a continuation, (2) the award will not extend the total period of Scholarship Program support beyond 4 years, and (3) the participant is eligible for continued participation in the Scholarship Program.

§ 62.7 What will an individual be awarded for participating in the scholarship program?

(a) *Amount of scholarship.* (1) A scholarship award for each school year will consist of (i) tuition, (ii) reasonable educational expenses, including required fees, books, supplies, and required educational equipment, and (iii) a monthly stipend for the 12-month period beginning with the first month of each school year in which the individual is a participant. For purposes of this section ''required fees'' means those fees which are charged by the

school to all students pursuing a similar curriculum and ''required educational equipment'' means educational equipment which must be rented or purchased by all students pursuing a similar curriculum at that school.

(2) The Secretary may enter into a contract with the school in which the participant is enrolled for the direct payment of tuition and reasonable educational expenses in the participant's behalf.

(b) *Payment of scholarship: Leave-of-absence; repeated course work.* The Secretary will suspend scholarship payments to or on behalf of a participant if the school (1) approves a leave-of-absence for the participant for health, personal, or other reasons, or (2) requires the participant to repeat course work for which the Secretary has previously made scholarship payments under § 62.7. However, if the repeated course work does not delay the participant's graduation date, scholarship payments will continue except for any additional costs relating to the repeated course work. Any scholarship payments suspended under this paragraph will be resumed by the Secretary upon notification by the school that the participant has returned from the leave-of-absence or has completed the repeated course work and is pursuing as a full-time student the course of study for which the scholarship was awarded.

§ 62.8 What does an individual have to do in return for the scholarship program award?

(a) *General.* Except as provided in paragraphs (d), (f), and (g) of this section, each participant is obligated to (1) become a member of the National Health Service Corps employed as a Commissioned Officer in the Regular or Reserve Corps of the Service or as a Federal civilian in the full-time clinical practice of the participant's profession and (2) serve in the health manpower shortage area to which the participant is assigned by the National Health Service Corps.

(b) *Beginning of service.* (1) The period of obligated service will begin when the Scholarship Program participant begins to provide services in the health manpower shortage area to which he or she is assigned by the Secretary. Except for those participants who receive a deferral under § 62.9 (a) or (b), this assignment will be made by the Secretary as soon as possible following: (i) the completion of the participant's course of study leading to a degree in medicine, osteopathy, dentistry, or an equivalent credential for a particular health profession, and (ii) appointment of the participant as a Commissioned Officer in the Regular or Reserve Corps of the Service or as a civilian member of the National Health Service Corps.

(2) For purposes of this paragraph, ''appointment'' means only those appointments as Commissioned Officers in the Regular or Reserve Corps of the Service or as civilian members of the National Health Service Corps made specifically for the purpose of serving a participant's period of obligated service.

(c) *Duration of service.* Except as provided in § 62.14(b)(1), the period for which the Scholarship Program participant is obligated to serve is equal to 1 year for each school year for which the participant receives a scholarship award under this part, or 2 years, whichever is greater.

(d) *Service by detail.* If the Secretary determines that there is no need in a health manpower shortage area for a member of the profession in which the Scholarship Program participant is obligated to provide service, the Scholarship Program participant may be detailed to serve the period of obligated service as a full-time member of the profession for which the participant has been trained, in any unit of the Department of Health and Human Services as the Secretary may determine.

(e) *Creditability of approved graduate training.* Except as provided in § 62.14(b)(2), no period of approved graduate training will be credited toward satisfying the period of obligated service incurred under the Scholarship Program.

(f) *Service under the National Research Service Award Program.* (1) A Scholarship Program participant who demonstrates exceptional promise for medical research may perform the period of obligated service owed under this section by participating in the National

Research Service Award Program for individual postdoctoral fellows authorized under section 472 of the Act.

(2) Exceptional promise for medical research will be demonstrated if the participant applies for a National Research Service Award for individual postdoctoral fellows, is selected to participate in this research program, and accepts the offer of participation. A Scholarship Program participant in the National Research Service Award Program will receive credit toward satisfying the period of obligated service incurred under this section for any period of time he or she is engaged in activities which meet the service requirements of the National Research Service Award Program.

(3) If the time served under the National Research Service Award Program is less than the total period of obligated service owed under the Scholarship Program, the participant will serve the remainder of the Scholarship Program service obligation (i) in activities which meet the criteria for service under the National Research Service Award Program, as approved by the Secretary or (ii) as a member of the National Health Service Corps providing health services in the full-time clinical practice of his or her health profession. A participant who fails to begin or complete the service requirements under the National Research Service Award Program may be subject to the default penalty under § 62.10(c) of this part and the default penalties under the National Research Service Award Program.

(g) *Release from service obligation to engage in private practice.* The Secretary will release a participant from all or part of the service obligation if the participant applies for a release under section 753 of the Act and agrees in writing to engage for a period equal to the remaining period of the participant's service obligation in the full-time private clinical practice of the participant's health profession, under the requirements of section 753 of the Act.

§ 62.9 Under what circumstances can the period of obligated service be deferred to complete approved graduate training?

(a) *Requested deferment.* Upon the request of any participant receiving a degree from a school of medicine, osteopathy, or dentistry, veterinary medicine, optometry, podiatry or pharmacy, the Secretary will defer the beginning date of the obligated service to allow the participant to complete an approved graduate training program. The period of this deferment may not exceed (1) three years for any participant receiving a degree from a school of medicine, osteopathy or dentistry, or (2) one year for any participant receiving a degree from a school of veterinary medicine, optometry, podiatry or pharmacy. The Secretary may, however, extend this period of deferment if the Secretary determines that the extension is consistent with the needs of the National Health Service Corps.

(b) *Required deferment.* Each participant receiving a degree in medicine or osteopathy who does not intend to enter training which can be completed within the deferment period granted under paragraph (a) of this section must complete at least one year of approved graduate training before beginning the period of obligated service. This one year of training must be in (1) an allopathic flexible first-year program whose sponsorship includes approved residencies in family practice, internal medicine, pediatrics, or a categorical first-year program in family practice, internal medicine, or pediatrics; (2) a rotating internship in osteopathic medicine; or (3) such other programs as the Secretary determines provides comparable experience. Any participant receiving a degree in medicine or osteopathy who fails to complete the one year of required training or an approved graduate training program for which a deferment was granted under paragraph (a) of this section will be subject to the default penalties of § 62.10(c).

(c) *Altering deferment.* Before altering the length or type of approved graduate training for which the period of obligated service was deferred under paragraphs (a) or (b) of this section,

the participant must request and obtain the Secretary's approval of the alteration.

(d) *Additional terms of deferment.* The Secretary may prescribe additional terms and conditions for deferment under paragraphs (a), (b), and (c) of this section as necessary to carry out the purposes of the Scholarship Program.

(e) *Beginning of service after deferment.* Any participant whose period of obligated service has been deferred under paragraphs (a) or (b) of this section must begin the obligated service when the participant begins to provide health services in the health manpower shortage area to which he or she is assigned by the Secretary. This assignment will be made by the Secretary as soon as possible following (1) the completion of the requested or required graduate training for which the deferment was granted, and (2) appointment as a Commissioned Officer in the Regular or Reserve Corps of the Service or as a civilian member of the National Health Service Corps.

§ 62.10 What will happen if an individual does not comply with the terms and conditions of participating in the scholarship program?

(a) If a participant, other than one described in paragraph (b) of this section, fails to accept payment or instructs the school not to accept payment of the scholarship provided by the Secretary, the participant must, in addition to any service or other obligation incurred under the contract, pay to the United States the amount of $1,500 liquidated damages. Payment of this amount must be made within 30 days of the date on which the participant fails to accept payment of the scholarship award or instructs the school not to accept payment.

(b) When a participant fails to maintain an acceptable level of academic standing, is dismissed from the school for disciplinary reasons, or voluntarily terminates the course of study or program for which the scholarship was awarded before completing the course of study or program, the participant must, instead of performing any service obligation, pay to the United States an amount equal to all scholarship funds awarded under § 62.7. Payment of this amount must be made within 3 years of the date the participant becomes liable to make payment under this paragraph.

(c) If a participant fails to begin or complete the period of obligated service incurred under § 62.8, including failing to comply with the applicable terms and conditions of a deferment granted by the Secretary, the participant must pay to the United States an amount determined by the formula set forth in section 754(c) of the Act. Payment of this amount shall be made within 1 year of the date that the participant failed to begin or complete the period of obligated service, as determined by the Secretary.

§ 62.11 When can a scholarship program payment obligation be discharged in bankruptcy?

In accordance with section 754(d)(3) of the Act, any payment obligation incurred under § 62.10 may not be discharged in bankruptcy under title XI of the United States Code until 5 years after the date on which the payment obligation is due.

§ 62.12 Under what circumstances can the service or payment obligation be canceled, waived or suspended?

(a) Any obligation of a participant for service or payment will be canceled upon the death of the participant.

(b)(1) A participation may seek a waiver or suspension of the service or payment obligations incurred under this part by written request to the Secretary setting forth the bases, circumstances, and causes which support the requested action. The Secretary may approve a request for a suspension for a period of 1 year. A renewal of this suspension may also be granted.

(2) The Secretary may waive or suspend any service or payment obligation incurred by a participant whenever compliance by the participant (i) is impossible, or (ii) would involve extreme hardship to the participant and if enforcement of the service or payment obligation would be against equity and good conscience.

(c) Compliance by a participant with a service or payment obligation will be considered impossible if the Secretary determines, on the basis of information

and documentation as may be required, that the participant suffers from a physical or mental disability resulting in the permanent inability of the participant to perform the service or other activities which would be necessary to comply with the obligation.

(d) In determining whether to waive or suspend any or all of the service or payment obligations of a participant as imposing an undue hardship and being against equity and good conscience, the Secretary, on the basis of information and documentation as may be required, will consider:

(1) The participant's present financial resources and obligations;

(2) The participant's estimated future financial resources and obligations; and

(3) The extent to which the participant has problems of a personal nature, such as physical or mental disability, terminal illness in the immediate family which so intrude on the participant's present and future ability to perform as to raise a presumption that the individual will be unable to perform the obligation incurred.

§ 62.13 What are the limitations on the receipt of concurrent benefits?

Under section 741(f) or 836(h) of the Act, the Secretary may agree to repay a portion of an individual's educational loans in return for the individual's agreement to practice his or her profession in an area in need of health manpower. However, a Scholarship Program participant may not enter into an agreement with the Secretary under section 741(f) or 836(h) of the Act, until either:

(a) The participant has completed the service obligation under the Scholarship Program,

(b) The Secretary has recovered from the participant an amount determined under § 62.10, or

(c) Any service or payment obligation has been waived under § 62.12.

In no case shall a scholarship received under these regulations be considered an educational loan for the purposes of section 741(f) or 836(h) of the Act.

§ 62.14 What are the special provisions relating to recipients of awards under the PH/NHSC scholarship training program who will also receive awards under the scholarship program?

(a) Except as provided in paragraph (b) of this section, if a participant has previously received an award under the PH/NHSC Scholarship Training Program and also receives an award under the Scholarship Program, the terms and conditions of these regulations will apply to the participant's entire obligation incurred under both the PH/NHSC Scholarship Training Program and the Scholarship Program.

(b) If a participant has received an award under the PH/NHSC Scholarship Training Program and also receives an award under the Scholarship Program, the following conditions apply:

(1) *Period of obligated service—carry over.* The period of obligated service owed by the participant is equal to the total number of school years for which scholarship support was awarded under both the PH/NHSC Scholarship Training Program and the Scholarship Program without regard to either Program's minimum support requirement under 42 CFR 62.7(a) (1976) as adopted on May 22, 1974 (see 39 FR 17962), and under § 62.8(c) of this part.

(2) *Credit for internship and residency training.* (i) If a participant received a scholarship under the PH/NHSC Scholarship Training Program for any school year beginning before October 12, 1976, the participant will receive credit toward satisfying the periods of obligated service incurred under the PH/NHSC Scholarship Training Program and under § 62.8 of this part for any periods of internship or residency training served in a Service or National Health Service Corps facility.

(ii) If a participant received a scholarship for the first time during the 1977–78 school year under the PH/NHSC Scholarship Training Program, the participant will only receive 1 year of credit toward satisfying the period of obligated service incurred under the PH/NHSC Scholarship Training Program for internship or residency training served in a Service or National Health Service Corps facility.

(3) *Default penalties.* The PH/NHSC Scholarship Training Program default penalty will apply to a participant who fails to begin or complete the active duty service obligation incurred under that Program, and the § 62.10 default penalties will apply to a participant who fails to begin or complete the service obligation incurred under § 62.8 of these regulations. In determining which default penalty to apply when an individual who has received a Scholarship award under both the PH/NHSC Scholarship Training Program and the Scholarship Program fails to begin or complete his service obligation, the service obligations will be considered to have been served in the order in which they were incurred.

Subpart B—National Health Service Corps Loan Repayment Program

AUTHORITY: Sec. 215 of the Public Health Service Act, 58 Stat. 690, as amended, 63 Stat. 35 (42 U.S.C. 216); sec. 338B of the Public Health Service Act, 101 Stat. 992 (42 U.S.C. 2541–1).

SOURCE: 54 FR 13462, Apr. 3, 1989, unless otherwise noted.

§ 62.21 What is the scope and purpose of the National Health Service Corps Loan Repayment Program?

The regulations of this subpart apply to the award of health professions educational loan payments under the National Health Service Corps Loan Repayment Program authorized by section 338B of the Public Health Service Act (42 U.S.C. 2541–1). The purpose of the Program is to assure an adequate supply of trained health professionals for the National Health Service Corps. These professionals will be assigned by the Secretary to provide necessary health services to persons living in designated health manpower shortage areas.

§ 62.22 Definitions.

The definitions in § 62.2 of this part will apply for the purpose of this subpart, except for the definition of *approved graduate training*. The following definitions will also apply for purposes of this subpart:

Approved graduate training means a program of graduate training in allopathic or osteopathic medicine, dentistry or other health profession which (a) leads to eligibility for board certification or which provides other evidence of completion, (b) has been approved by the appropriate health professions body as determined by the Secretary and (c) is in the specialty or type of training specified by the Program participant in the Loan Repayment Program Contract or, at the Program participant's request and at the Secretary's option, is in a specialty or area of training determined by the Secretary to be consistent with the needs of the National Health Service Corps.

Commercial loans means loans made by banks, credit unions, savings and loan associations, insurance companies, schools, and other financial or credit institutions which are subject to examination and supervision in their capacity as lenders by an agency of the United States or of the State in which the lender has its principal place of business.

Educational expenses means the costs of the health professions education, exclusive of the tuition, such as fees, books, supplies, and educational equipment and materials.

Government loans means loans which are made by Federal, State, county or city agencies which are authorized by law to make such loans.

Living expenses means the costs of room and board, transportation and commuting costs and other costs incurred during an individual's attendance at a health professions school.

Loan Repayment Program means the National Health Service Corps Loan Repayment Program authorized by section 338B of the Act (42 U.S.C. 2541–1).

Loan Repayment Program Contract means the agreement, which is signed by an applicant and the Secretary, for the Loan Repayment Program wherein the applicant agrees to accept repayment of health professions educational loans and to serve in accordance with the provisions of section 338B of the Act and this subpart for a prescribed period of obligated service.

Medically underserved area means *health manpower shortage area* as defined in § 62.2.

Program participant means an individual whose application to the Loan Repayment Program has been approved and whose contract has been accepted and signed by the Secretary.

Qualifying loans means government and commercial loans for actual costs paid for tuition, reasonable educational expenses, and reasonable living expenses relating to the obtainment of a degree in allopathic or osteopathic medicine, dentistry, or other health profession. Such loans must have documentation which is contemporaneous with the training received in a health professions school. If health professions educational loans are refinanced, the original documentation of the loan(s) will be required to be submitted to the Secretary to establish the contemporaneous nature of such loans.

Reasonable educational and living expenses means those educational and living expenses which are equal to or less than the sum of the school's estimated standard student budgets for educational and living expenses for the degree program and for the year(s) during which the Program participant is/was enrolled in the school. However, if the school attended by the Program participant does/did not have a standard student budget or if a Program participant requests repayment for educational and living expenses which are in excess of the standard student budgets described in the preceding sentence, the Program participant must submit documentation, as required by the Secretary, to substantiate the reasonableness of all educational and living expenses incurred by the Program participant. To the extent that the Secretary determines, upon review of the Program participant's documentation, that all or a portion of the educational and living expenses are reasonable, these expenses will qualify for repayment.

§ 62.23 How will individuals be selected to participate in the Loan Repayment Program?

(a) In determining which applications from eligible individuals for participation in the Loan Repayment Program will be accepted for consideration, the Secretary will apply the following criteria:

(1) The extent to which an individual's training is in a health profession or specialty determined by the Secretary to be needed by the National Health Service Corps;

(2) The individual's commitment to serve in medically underserved areas;

(3) The availability of the individual for service, with highest consideration being given to individuals who will be available for service at the earliest dates;

(4) The length of the individual's proposed service obligation, with greatest consideration being given to persons who agree to serve for longer periods of time; and

(5) The individual's academic standing, prior professional experience in a health manpower shortage area, board certification, residency achievements, peer recommendations, depth of past residency practice experience and other criteria related to professional competence or conduct.

(b) Among qualified applicants, the Secretary will give priority to applications from individuals whose health professions or specialties are most needed by the NHSC and who are, in the Secretary's judgement, most committed to practice in medically underserved areas.

(c) By notice published in the FEDERAL REGISTER from time to time, the Secretary will specify the professions and specialties most needed by the National Health Service Corps.

§ 62.24 Who is eligible to apply for the Loan Repayment Program?

(a) To be eligible to participate in the Loan Repayment Program an individual must:

(1)(i) Be enrolled as a full-time student in the final year of a course of study or program approved by the Secretary which leads to a degree in allopathic or osteopathic medicine, dentistry or other health profession and which is offered by an accredited school in a State or

(ii) Be enrolled in an approved graduate training program in allopathic or osteopathic medicine or dentistry or other health profession in a State, or

(iii) Have a degree in allopathic or osteopathic medicine or dentistry or

other health profession and have completed an approved graduate training program in a State (or received a waiver of the completion requirement under § 62.26(d) of this subpart) and have a current and valid license to practice such health profession in a State;

(2) Be eligible for, or hold, an appointment as a commissioned officer in the Regular or Reserve Corps of the Public Health Service or be eligible for selection for civilian service in the National Health Service Corps;

(3) Submit an application to participate in the Loan Repayment Program; and

(4) Sign and submit to the Secretary, at the time of the submission of such application, a written contract agreeing to accept repayment of health professions educational loans and to serve (in accordance with this subpart) for the applicable period of obligated service in a health manpower shortage area as determined by the Secretary.

(b) Any individual who owes an obligation for health professional service to the Federal Government or a State or other entity under an agreement with such Federal, State or other entity is ineligible for the Loan Repayment Program unless such obligation will be completely satisfied prior to the beginning of service under this Program.

(c) Individuals in breach of a written contract entered into under section 338A of the Act and liable to the United States under section 338E(b) of the Act, in breach of a written contract entered into under section 225 of the Act (as in effect on September 30, 1977) and liable to the United States under section 225(f)(1) of the Act (as in effect on September 30, 1977) or in breach of any other obligation for health professional service to a Federal, State or local government entity are not eligible for participation in the Loan Repayment Program.

(Approved by the Office of Management and Budget under control number 0915–0127)

§ 62.25 What does the Loan Repayment Program provide?

(a) *Loan repayment.* For each year of service the individual agrees to serve, with a minimum of 2 years of obligated service, the Secretary may pay:

(1) Except as provided in paragraph (a)(2) of this section, up to $20,000 per year of a Program participant's qualifying loans or

(2) Up to $25,000 per year for a Program participant's qualifying loans if the Program participant agrees to provide obligated service in the Indian Health Service or a health facility or program operated by a tribe or tribal organization under the Indian Self-Determination Act.

The Secretary may establish different levels of annual loan repayment to encourage Program participants to serve in a manner which is in the best interest of the Loan Repayment Program. No loan repayments will be made for any professional practice performed prior to the effective date of the Loan Repayment Program Contract. Once a loan repayment contract has been signed by both parties, the Secretary will obligate such funds as will be necessary to ensure that sufficient funds will be available to make loan repayments for the duration of the period of obligated service.

(b) *Site visit.* The Secretary may reimburse an individual for the actual and reasonable travel expenses associated with one trip from the individual's residence to a site for the purpose of evaluating such site for service under the Loan Repayment Program.

(c) *Tax liability payments.* The Secretary may, upon a Program participant's written request, make payments in a reasonable amount, as determined by the Secretary, to reimburse the Program participant for all or part of the increased Federal, State and local tax liability resulting from loan repayments received under the Loan Repayment Program. To maximize the Federal resources available for placing participants in HMSAs, supplementary payments for increased tax liability will only be made under unusual circumstances, and in no cases will these tax liability payments exceed 20% of the annual amounts of the loans being repaid. Program participants wishing to receive tax liability payments must submit their requests for such payments in a manner prescribed by the Secretary and must provide the Secretary with any documentation the Secretary determines is necessary to

establish a Program participant's increased tax liability. The Secretary will determine, based on the availability of funds and such other factors as the Secretary determines, the amounts of any such payments that may be made.

(Information collection requirements contained in paragraph (c) were approved by the Office of Management and Budget under control number 0915–0131)

[54 FR 13462, Apr. 3, 1989, as amended at 57 FR 56996, Dec. 2, 1992]

§ 62.26 What does an individual have to do in return for loan repayments received under the Loan Repayment Program?

(a) A Program participant whose eligibility for the Loan Repayment Program is based on § 62.24(a)(1)(i) of this subpart must maintain full-time enrollment, at an acceptable level of academic standing, in that course of study until its completion. Upon completion of that course of study, a Program participant who received a degree in allopathic or osteopathic medicine must enter approved graduate training and a Program participant who received a degree in a health profession other than allopathic or osteopathic medicine may enter approved graduate training. Once a Program participant enters approved graduate training, he or she must also meet the requirements set forth in paragraphs (b) (1), (2), (3), and (4) of this section. If a Program participant who received a degree in a health profession other than allopathic or osteopathic medicine does not enter approved graduate training; service, in accordance with paragraph (e) of this section, must commence as soon as possible upon the Program participant's completion of the course of study leading to his or her health professions degree.

(b) A Program participant whose eligibility for the Loan Repayment Program is based on § 62.24(a)(1)(ii) of this subpart must: (1) Continue in his or her approved graduate training program at an acceptable level of academic standing; (2) provide the Secretary with annual documentation of continued participation in that approved graduate training program at an acceptable level of academic standing; (3) successfully complete that approved graduate training program; and (4) commence service, in accordance with paragraph (e) of this section, as soon as possible upon completion of approved graduate training.

(c) A Program participant whose eligibility for the Loan Repayment Program is based on § 62.24(a)(1)(iii) of this subpart must commence service, in accordance with paragraph (e) of this section, as soon as possible after the effective date of the Loan Repayment Program Contract.

(d) If a Program participant fails to complete approved graduate training, the Secretary may, on his or her own initiative or at the Program participant's request, waive, for good cause, the completion requirement. Good cause will be deemed to exist if the Secretary determines that the Program participant has sufficient health professions training to be utilized by and make a substantial contribution to the National Health Service Corps. If waiver of the completion requirement in paragraph (b) of this section is granted; service, in accordance with paragraph (e) of this section, must commence as soon as possible after the granting of the waiver.

(e) Except for Program participants who fail to complete their course of study leading to a health professions degree or who fail to complete approved graduate training and do not receive a waiver pursuant to paragraph (d) of this section, each program participant must:

(1) Serve in a health manpower shortage area to which he or she is assigned by the Secretary as a member of the National Health Service Corps or serve pursuant to section 338D of the Act in a health manpower shortage area selected by the Secretary and

(2) Accept employment in a full-time clinical practice of the Program participant's profession, as

(i) A commissioned officer in the Regular or Reserve Corps of the Public Health Service,

(ii) A civilian member of the National Health Service Corps who is an employee of the United States,

(iii) A member of the National Health Service Corps who is not an employee of the United States, or

(iv) A private practitioner who is providing obligated service under the provisions of section 338D of the Act.

(f) The minimum length of obligated service is two years, or such longer period as the Program participant may agree to. The maximum length of obligated service is four years. If a Program participant agrees to an original contract of two or three years, such contract may be extended, subject to the availability of appropriated funding, for one year or two years (up to the four-year maximum). A one-year extension will not reactivate the statutory minimum requirement of two years of service.

(Information collection requirements contained in paragraph (b)(2) were approved by the Office of Management and Budget under control number 0915–0131)

§ 62.27 What will happen if an individual does not comply with the terms and conditions of participation in the Loan Repayment Program?

Program participants who default on their Loan Repayment Program Contracts will be subject to the applicable monetary payment provisions set forth at section 338E of the Act. Payment of any amount owed under section 338E of the Act shall be made within one year of the date the participant breached his or her Loan Repayment Contract, as determined by the Secretary.

§ 62.28 Under what circumstances can the service or payment obligation be canceled, waived or suspended?

A service or payment obligation under the Loan Repayment Program will be canceled or may be waived or suspended as provided in § 62.12 of this part of the regulations.

§ 62.29 Under what circumstances can the Loan Repayment Program obligation be discharged in bankruptcy?

Any payment obligation incurred under § 62.27 of this subpart may be released by a discharge in bankruptcy under title 11 of the United States Code only if such discharge is granted after the expiration of the five-year period beginning on the first date that payment was required, and only if the bankruptcy court finds that nondischarge of the obligation would be unconscionable.

§ 62.30 What other regulations and statutes apply?

Other regulations and statutes which apply to this subpart include but are not limited to:

Debt Collection Act of 1982, Pub. L. 97–365 (5 U.S.C. 5514) including Section 4, Requirement that Applicant Furnish Taxpayer Identifying Number;

Fair Credit Reporting Act (15 U.S.C. 1681 *et seq.*);

Privacy Act of 1974 (5 U.S.C. 552a);

Section 215(a) of the Public Health Service Act, as amended (42 U.S.C. 216(a)), for PHS commissioned officers, and 5 U.S.C. 3301 for civil service employees both of which authorize verification of an individual's suitability for employment;

Privacy Act of 1974; Alteration of System of Records, 52 FR 21622–21627, June 8, 1987, regarding the collection, maintenance and allowable use of personal information requested from program applicants.

Subpart C—Grants for State Loan Repayment Programs

AUTHORITY: Sec. 215 of the Public Health Service Act, 58 Stat. 690 as amended, 63 Stat. 35 (42 U.S.C. 216); sec. 338H of the Public Health Service Act, 101 Stat. 999 (42 U.S.C. 254q–1).

SOURCE: 54 FR 13464, Apr. 3, 1989, unless otherwise noted.

§ 62.51 What is the scope and purpose of the State Loan Repayment Program?

The regulations of this subpart apply to the award of grants authorized by section 338H of the Public Health Service Act (42 U.S.C. 254q–1) to support the establishment of State programs similar to the National Health Service Corps Loan Repayment Program authorized by section 338B of the Public Health Service Act (42 U.S.C. 2541–1). The purpose of this program is to improve the delivery of health services in medically underserved areas.

§ 62.52 Definitions.

In addition to the definitions in § 62.2 of this part, the following definitions will apply for purposes of this subpart:

The definitions of *Qualifying loans*, *Commercial loans*, *Government loans*,

Educational expenses, and *Living expenses* as contained in § 62.22 of this part will apply for purposes of this subpart.

Medically underserved area means *health manpower shortage area* or an area which has been designated by a State pursuant to standards described in § 62.54(b)(1) of this subpart which the Secretary has deemed acceptable.

State Loan Repayment Program or *program* means a State loan repayment program authorized under section 338H (42 U.S.C. 254q–1) of the Act.

§ 62.53 Who is eligible for this program?

Any State is eligible to apply for a grant under this subpart.

§ 62.54 What must applications for the State Loan Repayment Program contain?

(a) An application for a grant under this subpart shall be submitted to the Secretary at such time and in such form and manner as the Secretary requires.

(b) The application shall contain a budget and narrative statement describing the manner in which the applicant intends to conduct the project and carry out the requirements of this subpart. In addition, applications must include:

(1) A description of the State's standards for the designation of medically underserved areas, except that no description of designation standards will be required if the State elects to use health manpower shortage areas designated by the Secretary;

(2) An assessment of the need and demand in medically underserved areas within the State for health professions manpower with special emphasis on individuals whose training is in a health profession or specialty identified by the Secretary pursuant to § 62.23(b) of this part. This assessment should include such demographic indicators of the need as the economic accessibility of health care services in the State as measured by poverty levels, the percentage of the service area population without health insurance, and the health status of the population as measured by the rates of infant mortality, low birth weight, geographic barriers and other indicators;

(3) A proposal for the placement of the health profession providers in medically underserved areas with the greatest need and demand in accordance with the need/demand assessment completed in compliance with paragraph (b)(2) of this section;

(4) Adequate assurances that sufficient current year State funds are available to cover the non-Federal share of State Loan Repayment Program costs;

(5) A description of how the program would meet the requirements of § 62.55 to demonstrate its similarity to the NHSC Loan Repayment program;

(6) A description of the source of, and plans for the use of, State matching funds;

(7) A description of how the program would be coordinated with Federal, State and other organized activities within the State which relate to health manpower services and resources;

(8) Identification of the State entity and key personnel who would administer the grant and a description of the qualifications and experience of that entity and its personnel concerning the State's health service delivery system and health manpower needs;

(9) A description of the State's plans for administration of the State's Loan Repayment Program which may include such provisions as annual levels of loan repayment to be made under the program, the number of health professionals to be funded, the frequency and timing of the loan repayments, program incentives for longer periods of service, procedures for monitoring the service of program participants and placing professionals in default for failure to complete their service obligation, penalties for default, provisions for waivers and suspensions, and a description of the contract/obligation process to be used by the State to obligate individuals receiving State loan repayments;

(10) A description of the State's need for Federal assistance in obtaining health professions resources and demonstrated inability to obtain such resources without Federal assistance;

(11) A description of how the State will accord special consideration to

medically underserved areas with large minority populations; and

(12) The signature of an individual authorized to act for the State and to assume on behalf of the State the obligations imposed by the statute, the applicable regulations of this subpart and any additional conditions of the grant.

(Approved by the Office of Management and Budget under control number 0915–0131)

§ 62.55 What State Program Elements are required to ensure similarity with the NHSC Loan Repayment Program?

A State Loan Repayment Program supported under this subpart must:

(a) Establish priorities for loan repayment applicants consistent with the provisions of § 62.23 of this part;

(b) Contract only with a person who is (1) enrolled as a full-time student in the final year of a course of study or program in an accredited school in a State leading to a degree in allopathic or osteopathic medicine, dentistry or other health profession, or (2) enrolled in an accredited graduate training program in a State in allopathic or osteopathic medicine or dentistry or other health profession, or (3) a practitioner licensed by a State who has completed training in an accredited graduate training program in allopathic or osteopathic medicine, dentistry or other health profession;

(c) Provide that health professionals participating in a State Loan Repayment Program shall:

(1) Serve for at least 2 years in a medically underserved area identified pursuant to § 62.54(b)(3) of this subpart in the full-time clinical practice of their profession,

(2) Charge for his or her professional services at the usual and customary rate prevailing in the area in which such services are provided, except that if a person is unable to pay such charge, such person shall be charged at a reduced rate or not charged any fee,

(3) In providing health services, not discriminate against any person on the basis of such person's ability to pay for such services or because payment for the health services provided to such person will be made under the insurance program established under part A or B of title XVIII of the Social Security Act or under a State plan for medical assistance approved under title XIX of such Act, and

(4) Agree to accept an assignment under section 1842(b)(3)(B)(ii) of such Act for all services for which payment may be made under part B of title XVIII of such Act and enter into an appropriate agreement with the State agency which administers the State plan for medical assistance under title XIX of such Act to provide service to individuals entitled to medical assistance under the plan;

(d) Repay qualifying loans for participating health professionals;

(e) Provide that the loans of health professionals will be repaid on a periodic basis after the receipt of obligated services by such participant for such period; and

§ 62.56 How are the Federal grant funds and State matching funds to be used under this program?

The Federal share of any program shall not exceed 75 percent of the cost of the approved State program. The Federal share must be used to repay the qualifying loans of health professionals. No portion of the Federal share shall be used to pay for administrative costs of any State Loan Repayment Program. The State's share of the program may be used to repay qualifying loans of health professionals or administrative costs of the State's Loan Repayment Program, or a combination of both. All program administrative costs are to be borne by the State. No portion of the State's share of the program shall consist of Federal funds.

§ 62.57 How will States be selected to participate in this program?

Within the limits of funds available under section 338H of the Act, the Secretary may award grants to State applicants whose proposed Loan Repayment Programs will, in his or her judgment, best promote the purposes of section 338H of the Act, taking into account, among other pertinent factors:

(a) The need of the State for health professions manpower;

(b) The number and type of providers the State proposes to support through this program;

(c) The acceptableness of the State's standards for the designation of medically underserved areas and the appropriateness of the proposed placements of obligated providers;

(d) The degree of similarity between the proposed State Loan Repayment Program and the National Health Service Corps Loan Repayment Program;

(e) The adequacy of the qualifications, the administrative and managerial ability and the experience of the State staff to administer and carry out the proposed project;

(f) The suitability of the applicant's approach and the degree to which the applicant's project is coordinated with Federal, State and other organized activities for meeting the State's health professions manpower needs and resources, including mechanisms for an ongoing evaluation of the program's activities;

(g) The source and plans for use of the State match (including the percentage of the State's match that is proposed to be used for loan repayments), the degree to which the State match exceeds 25% or has increased over time, and the amount of the match relative to the needs and resources of the States; and

(h) The extent to which special consideration will be extended to medically underserved areas with large minority populations.

§ 62.58 What other regulations apply?

Other regulations which apply to this subpart include but are not limited to:

45 CFR part 80—Nondiscrimination under programs receiving Federal assistance through the Department of Health and Human Services-Effectuation of title VI of the Civil Rights Act of 1964

45 CFR part 81—Practice and procedure for hearings under part 80 of this title

45 CFR part 84—Nondiscrimination on the basis of handicap in programs and activities receiving or benefiting from Federal financial assistance

45 CFR part 86—Nondiscrimination on the basis of sex in programs and activities receiving or benefiting from Federal financial assistance

45 CFR part 91—Nondiscrimination on the basis of age in HHS programs or activities receiving Federal financial assistance

45 CFR part 50—Policies of general applicability: Subpart D—Public Health Service grant appeals procedure

45 CFR part 16—Procedures of the Departmental Grant Appeals Board

45 CFR part 74—Administration of grants

45 CFR part 75—Informal grant appeals procedures

45 CFR part 92—Administrative Requirements for grants and cooperative agreements to State and local governments (effective October 1, 1988)

Subpart D—Special Repayment Program

AUTHORITY: Sec. 215 of the Public Health Service Act 58 Stat. 690, as amended, 63 Stat. 35 (42 U.S.C. 216); sec. 204, Pub. L. 100–177, 101 Stat. 1000.

SOURCE: 56 FR 56597, Nov. 6, 1991, unless otherwise noted.

§ 62.71 What is the scope and purpose of the Special Repayment Program?

These regulations apply to the Special Repayment Program authorized under section 204 of Pub. L. 100–177, which provides a time-limited opportunity for persons who were, on November 1, 1987, in breach of a written contract under the Public Health and National Health Service Corps Scholarship Training Program or the National Health Service Corps Scholarship Program to satisfy their scholarship obligations through full-time clinical service. These regulations do not apply to any Public Health and National Health Service Corps Scholarship Training Program or National Health Service Corps Scholarship Program obligation which the Secretary has determined was completely satisfied through service or monetary payment prior to November 1, 1987. The purpose of this program is to supply trained health professionals for the National Health Service Corps, which is used by the Secretary to improve the delivery of health services in health manpower shortage areas.

§ 62.72 Definitions.

In addition to the definitions in § 62.2 of this part, the following definitions will apply for purposes of this subpart:

Eligible defaulters means those individuals who, as of November 1, 1987, were:

(1) In breach of a written contract entered into under section 338A of the Act and liable to the United States

under section 338E(b) of the Act and/or in breach of a written contract entered into under section 225 of the Act (as in effect on September 30, 1977) and liable to the United States under section 225(f)(1) of the Act (as in effect on September 30, 1977); and

(2) Not already serving their obligations on December 1, 1987, under a judgment, forbearance agreement, or other written agreement to serve.

HPOL means the Health Manpower Shortage Area Placement Opportunity List described in section 204(b) of Pub. L. 100–177.

Match means that the Secretary has received documentation of:

(1) An offer of employment from a HPOL or SHPOL site which specifies at least the agreed upon salary and start date; and

(2) The Program participant's acceptance of that offer. Provided, however, that if the Program participant would be self-employed, a *match* means that the Secretary has approved a program participant's private practice option application under section 338D(a) of the Act.

Prior approved service means service performed prior to a Program participant's service start date under the Special Repayment Program:

(1) As a member of the National Health Service Corps pursuant to an assignment by the Secretary under section 333 of the Act;

(2) Under a written private practice option agreement signed by the Secretary pursuant to section 338D of the Act; or

(3) In compliance with section 338C(e) of the Act.

Program participant means an eligible defaulter whose contract under section 204 of Pub. L. 100–177 has been accepted and signed by the Secretary.

Scholarship amount means the sum of any amounts paid to, or on the behalf of, a scholarship recipient under the PH/NHSC Scholarship Training Program and/or the Scholarship Program.

SHPOL means the Supplemental Health Manpower Shortage Area Placement Opportunity List described in section 204(d) of Pub. L. 100–177.

Special Repayment Program or *Program* means the program authorized by section 204 of Pub. L. 100–177.

Total debt means the debt that would be owed by a Program participant under section 225(f)(1) of the Act, as in effect on September 30, 1977, and/or section 338E(b) of the Act, as if no payments had been made on the debt.

§ 62.73 What are the procedures for participation in the Special Repayment Program?

(a) *Notice of eligibility for participation in the program.* On or before February 29, 1988, the Secretary will, subject to paragraph (h) of this section, send written notice to each eligible defaulter of the opportunity provided under this Program. The notice will be sent to the last known address of each eligible defaulter and will describe the special repayment options available under the Program.

(b) *Selection of repayment method.* On or before May 29, 1988, eligible defaulters who wish to participate in this Program must sign and submit to the Secretary a written contract to provide service in accordance with either section 204(b) or section 204(c) of Pub. L. 100–177. The election between section 204(b) and section 204(c) of Pub. L. 100–177 is binding on the eligible defaulters.

(c) *Service sites.* Program participants will receive a listing of approved sites appropriate to the service option they have selected. Program participants electing service under section 204(b) of Pub. L. 100–177 will receive a HPOL. Program participants electing service under section 204(c) of Pub. L. 100–177 will receive a SHPOL. The HPOL or SHPOL sent to the Program participant will be specific to the Program participant's profession and his or her specialty training which is most needed by the National Health Service Corps. The Secretary is not required to identify placements for Program participants in a medical specialty for which the National Health service Corps has no need.

(d) *Time frames for matching and commencing service.* If a program participant electing to serve under section 204(b) of Pub. L. 100–177 chooses to serve at a remaining site on the 1988 HPOL, such participant must match to a site and must begin serving at the site by October 1, 1988. If a Program

participant electing to serve under section 204(b) of Pub. L. 100–177 chooses to serve at a site on the 1989 HPOL, such participant must match to a HPOL site by February 15, 1989, and must begin service at the site by October 1, 1989. If a Program participant has elected to serve under section 204(c) of Pub. L. 100–177, such participant must match to a SHPOL site by May 15, 1989, and must begin service at that site by October 1, 1989.

(e) *Site visits*. The Program participant is responsible for the costs of any site visit(s) and any other contact with the site to obtain employment at the site.

(f) *Effect of failure to meet established time frames*. If a Program participant does not match to a site or begin service at that site within the time frames described in paragraph (d) of this section, the Secretary will determine that such individual is not relieved of his or her liability to the United States under the PH/NHSC Scholarship Training Program and/or Scholarship Program (including accrued interest and/or damages).

(g) *Service*. Service must be performed in accordance with subpart II of part D of title III of the Act. Service credit will begin after a Program participant has matched to a HPOL or SHPOL site and has commenced service at that site in accordance with subpart II of part D of title III of the Act.

(h) *Secretary's exclusion authority*. The Secretary is authorized, at any time, to deny or terminate an individual's participation in the Program for reasons related to the individual's professional competence or conduct.

§ 62.74 How much credit will a Program participant receive for monetary repayments made, or for approved service performed, before beginning service under the Special Repayment Program?

(a) Prior approved service performed by a Program participant will be credited to the Program participant for the purpose of calculating the Program participant's remaining service obligation under this Program. Thus, the Program participant's remaining service obligation will be calculated by subtracting the number of days of the Program participant's prior approved service from the number of days of the Program participant's original service obligation under the PH/NHSC Scholarship Training Program and/or the Scholarship Program. If a Program participant has made monetary payments, his or her remaining service obligation will be reduced by converting the monetary payments into days of service credit as set forth in paragraph (b) or (c) of this section, whichever is applicable.

(b) Program participants who elect to serve pursuant to section 204(b) and section 204(c)(2) of Pub. L. 100–177, will not receive a refund of any amounts previously paid but will receive service credit for those payments as follows:

(1) The number of days of service credit will be calculated by dividing the total amount paid by the Program participant prior to the Program participant's service start date by the total debt as of the service start date and multiplying the result of that division by the number of days of the participant's remaining service obligation (as determined by the formula set forth in the second sentence of paragraph (a) of this section).

(2) If the Program participant defaults on a contract under this Program, prior monetary payments will not be credited to service but will be applied to the monetary debt owed by the Program participant.

(c) Program participants who elect to serve under section 204(c)(1) of Pub. L. 100–177 must pay an amount equal to the scholarship amount. Any amounts paid by the Program participant prior to or after entry into the Program, in accordance with § 62.76 of this subpart, will be used to reduce the Program participant's financial obligation incurred under section 204(c)(1) of Pub. L. 100–177. In some cases, the amounts paid before or after entry into the Program will exceed the scholarship amount. These payments in excess of the scholarship amount will be converted into days of service credit under the formula set forth in paragraph (b)(1) of this section. If a Program participant defaults on a contract under this option, the monies paid in excess of the scholarship amount will not be credited to service but will be credited toward the monetary debt owed by the

Program participant under section 338E(b) of the Act or section 225(f)(1) of the Act, as in effect on September 30, 1977. The scholarship amount paid upon entering this option will be forfeited.

§ 62.75 Will individuals serving under the Special Repayment Program receive credit for partial service?

(a) With respect to obligations under the Scholarship Program, a credit will be allowed for partial service under the Special Repayment Program and will result in a reduction of the Program participant's financial obligation in accordance with the following formula:

$$A = 30\frac{\left[t - \left(s + \frac{1}{2}r\right)\right]}{t}$$

In which:

'A' is the amount the United States is entitled to recover;

'0' is the sum of the amounts paid to or on behalf of the Program participant under the Scholarship Program and the interest on such amounts which would be payable if, at the time the amounts were paid, they were loans bearing interest at the maximum legal prevailing rate, as determined by the Treasurer of the United States;

't' is the sum of (1) the number of months of prior approved service plus (2) the number of months of the Program participant's period of obligated service under the Program including any additional months of service incurred pursuant to section 204(c)(2) of Pub. L. 100–177;

's' is the number of months of prior approved service performed by the Program participant before commencing service under this Program; and

'r' is the number of months of service performed by the Program participant in compliance with this Program.

However, where a judgment has been entered against a Program participant, the formula will be revised such that:

'30' is the amount of the judgment representing the Program participant's liability under the Scholarship Program, including any accrued post judgment interest and excluding any monetary payments on the judgment which may have been made by the Program participant;

't' is the sum of (1) the number of months of prior approved service performed by the Program participant after entry of the judgment but before commencing service under this Program plus (2) the number of months of the Program participant's period of obligated service under the Program including any additional months of service incurred pursuant to section 204(c)(2) of Pub. L. 100–177; and

's' is the number of months of prior approved service performed by the Program participant after the entry of the judgment but before commencing service under this Program.

(b) With respect to obligations under the PH/NHSC Scholarship Training Program, if a Program participant fails to complete the period of obligated service under the Program (including any additional months of service incurred pursuant to section 204(c)(1) of Pub. L. 100–177), no credit for partial service under this Program will be allowed.

(c) Where participants have obligations under both the Scholarship Program and the PH/NHSC Scholarship Training Program, credit for service will be applied against the scholarship obligations in the order in which they were incurred.

§ 62.76 How will amounts of money due under the option under section 204(c)(1) of Public Law 100–177 be required to be repaid?

Program participants who elect to serve under section 204(c)(1) of Pub. L. 100–177 will be required to pay the full scholarship amount at least 60 days prior to the service start date specified in the documentation submitted to the Secretary.

PART 63—TRAINEESHIPS

Sec.

63.1 To what programs do these regulations apply?
63.2 Definitions.
63.3 What is the purpose of traineeships?
63.4 What are the minimum qualifications for awards?
63.5 How will NIH make awards?
63.6 How to apply.
63.7 What are the benefits of awards?
63.8 What are the terms and conditions of awards?
63.9 How may NIH terminate awards?
63.10 Other HHS regulations and policies that apply.

AUTHORITY: 42 U.S.C. 216, 282(b)(13), 284(b)(1)(C), 285a–2(b)(3), 286b–3, 287c–21(a).

SOURCE: 60 FR 10719, Feb. 27, 1995, unless otherwise noted.

§ 63.1 To what programs do these regulations apply?

(a) The regulations in this part apply to research traineeships awarded by the Director, NIH, each director of a national research institute of NIH, the Director of the National Library of Medicine, and the Director of the National Center for Complementary and Alternative Medicine, or their designees, pursuant to sections 402(b)(13), 405(b)(1)(C), 413(b)(3), 472, and 485(D)(a) of the Act, respectively.

(b) The regulations of this part do not apply to research training under the National Research Service Award Program governed by 42 CFR part 66 or to the Mental Health Traineeship Program governed by 42 CFR part 64a.

(c) Except as otherwise permitted under section 413(b)(3) of the Act, the regulations of this part do not apply to residency training of physicians or other health professionals.

[65 FR 66512, Nov. 6, 2000]

§ 63.2 Definitions.

As used in this part:

Act means the Public Health Service Act, as amended (42 U.S.C. 201 *et seq.*).

Award means an award of funds under sections 402(b)(13), 405(b)(1)(C), 413(b)(3), 472, 485D(a), or other sections of the Act which authorize research training or traineeships.

Awardee means an individual awarded a traineeship under sections 402(b)(13), 405(b)(1)(C), 413(b)(3), 472, 485D(a), or other sections of the Act which authorize research training or traineeships.

Director means the Director, NIH, the director of a national research institute of NIH, the Director of the National Library of Medicine, and the Director of the National Center for Complementary and Alternative Medicine, or any official of NIH to whom the authority involved has been delegated.

HHS means the Department of Health and Human Services.

Misconduct in science shall have the same meaning as prescribed in § 50.102 of this chapter.

NIH means the National Institutes of Health.

PHS means the Public Health Service.

Traineeship means an award under the regulations of this part to a qualified individual for that person's subsistence and other expenses during the period that person is participating in the research training approved under the award.

[60 FR 10719, Feb. 27, 1995, as amended at 65 FR 66513, Nov. 6, 2000]

§ 63.3 What is the purpose of traineeships?

The purpose of an NIH research traineeship is to provide support for financial subsistence to an individual during a period in which the awardee is acquiring training in:

(a) Basic and/or clinical biomedical or behavioral research relating to human health, including extending healthy life and reducing the burdens of illness, or

(b) Medical library science or related fields pertaining to sciences related to health or the communication of health sciences information.

Traineeships are intended to make available in the United States an increased number of persons having special competence in these research fields through developmental training and practical research experience in the facilities of NIH, with supplemental training at other qualified institutions (see § 63.8(a)).

§ 63.4 What are the minimum qualifications for awards?

Minimum qualifications for any traineeship shall be established by the Director and shall be uniformly applicable to all applicants in each traineeship program. These minimum qualifications may include requirements as to citizenship, medical standards, academic degrees, professional or other training or experience, and other factors as may be necessary to the fulfillment of the purpose of the traineeship. The Director may, as a matter of general policy or, in individual cases, waive compliance with any minimum qualification so established to the extent that the applicant or applicants have substantially equivalent qualifications or have such special training, experience or opportunity for service as to make an award

particularly appropriate, and to the extent the Director finds it is consistent with the fulfillment of the purpose of the traineeship.

§ 63.5 How will NIH make awards?

Subject to the regulations of this part, the Director may award traineeships to those qualified applicants who are best able in that official's judgment to carry out the purpose of the traineeships. These awards may be made for a period of one (1) year or other period, including extensions or renewals, as may be specified.

§ 63.6 How to apply.

(a) Application for a traineeship shall be made in writing as prescribed by the Director.

(b) In addition to other pertinent information, the Director may require each applicant to submit the following information:

(1) Certification of the applicant's citizenship status;

(2) The applicant's educational background and other qualifications and experience, including previous academic and professional degrees, if any; and

(3) The subject area of the proposed training.

(c) By applying, eligible individuals agree to abide by HHS, PHS, and NIH regulations, and the terms and conditions of the traineeship award which may require compliance with policies and procedures that apply to the proper conduct of research, such as research involving human and animal subjects, patient care, hospital and laboratory procedures, handling of confidential information, and outside employment.

§ 63.7 What are the benefits of awards?

(a) Subject to the availability of funds, each individual awarded a traineeship may receive a stipend fixed in an amount determined by the Director.

(b) Additional allowances and benefits may be authorized by and at the discretion of the Director, taking into account the cost of living and other factors such as the requirements of the training program and availability of discretionary funds. Discretionary allowances and benefits may include: health benefits coverage; dependents' allowance; travel to pre-award interviews, to first duty station, and return to the place of origin upon conclusion of the traineeship; tuition and institution fees; and other specific costs as may be necessary to fulfill the purpose of the training program.

§ 63.8 What are the terms and conditions of awards?

All traineeships shall be subject to the following terms and conditions:

(a) Training must be carried out at a facility of the NIH, but may be supplemented by additional training acquired at another institution which is found by the Director to be directly related to the purpose of the traineeship and necessary to its successful completion.

(b) Payments shall be made to the awardee or to the institution for payment to the awardee in accordance with payment schedules as prescribed by the Director for each traineeship program.

(c) The awardee shall reimburse NIH for any overpayment of stipends or other allowances because of early termination of the traineeship or any other reason, unless waived for good cause shown by the awardee.

(d) The Director may establish procedures and requirements applicable to traineeship awards, consistent with the regulations in this part, regarding: (1) The proper conduct of research investigations, including research involving human and animal subjects; (2) patient care; (3) hospital and laboratory procedures; (4) handling of confidential information; (5) outside employment; and (6) additional conditions the Director finds necessary to fulfill the purpose of the traineeship.

(e) The awardee shall sign an agreement to comply with the terms and conditions of the traineeship.

§ 63.9 How may NIH terminate awards?

The Director may terminate a traineeship at any time:

(a) Upon written request of the awardee; or

(b) If it is determined that the awardee has committed misconduct in science, is ineligible, or has materially failed to comply with the terms and

conditions of the award or to carry out the purpose for which the award was made; or

(c) If the awardee is convicted of a felony, or an offense involving any illegal drug or substance, or any offense involving a lack of financial integrity or business honesty; or

(d) Because of programmatic changes or lack of funds.

[65 FR 66513, Nov. 6, 2000]

§ 63.10 Other HHS regulations and policies that apply.

Several other policies and regulations apply to awards under this part. These include, but are not necessarily limited to:

45 CFR part 46—Protection of human subjects.

45 CFR part 76—Governmentwide debarment and suspension (nonprocurement) and governmentwide requirements for drug-free workplace (grants).

45 CFR part 80—Nondiscrimination under programs receiving Federal assistance through the Department of Health and Human Services—effectuation of title VI of the Civil Rights Act of 1964.

45 CFR part 81—Practice and procedure for hearings under part 80 of this title.

45 CFR part 84—Nondiscrimination on the basis of handicap in programs and activities receiving Federal financial assistance.

45 CFR part 86—Nondiscrimination on the basis of sex in education programs and activities receiving or benefiting from Federal financial assistance.

45 CFR part 91—Nondiscrimination on the basis of age in HHS programs or activities receiving Federal financial assistance.

59 FR 14508 (March 28, 1994)—NIH Guidelines on the Inclusion of Women and Minorities as Subjects in Clinical Research. (NOTE: Interested persons should contact the Office of Research on Women's Health, NIH, Room 201, Building 1, MSC 0161, Bethesda, MD 20892–0161; telephone 301–402–1770 (not a toll-free number) to obtain copies of this policy.)

59 FR 34496 (July 5, 1994)—NIH Guidelines for Research Involving Recombinant DNA Molecules. (NOTE: Interested persons should contact the Office of Biotechnology Activities, NIH, Suite 323, 6000 Executive Boulevard, MSC 7010, Bethesda, MD 20892–7010; telephone 301–496–9838 (not a toll-free number) to obtain copies of the policy.)

''Public Health Service Policy on Humane Care and Use of Laboratory Animals'' (Revised September 1986), Office of Laboratory Animal Welfare, NIH. (NOTE: Interested persons should contact the Office of Laboratory Animal Welfare, NIH, Rockledge Building I, 6705 Rockledge Drive, Suite 1050, MSC 7982, Bethesda, MD 20892–7982; telephone 301–496–7163 (not a toll-free number) to obtain copies of the policy.)

[60 FR 10719, Feb. 27, 1995, as amended at 65 FR 66513, Nov. 6, 2000]

PART 63a—NATIONAL INSTITUTES OF HEALTH TRAINING GRANTS

Sec.

63a.1 To what programs do these regulations apply?
63a.2 Definitions.
63a.3 What is the purpose of training grants?
63a.4 Who is eligible for a training grant?
63a.5 How to apply for a training grant.
63a.6 How are training grant applications evaluated?
63a.7 Awards.
63a.8 How long does grant support last?
63a.9 What are the terms and conditions of awards?
63a.10 How may training grant funds be spent?
63a.11 Other HHS regulations and policies that apply.

AUTHORITY: 42 U.S.C. 216, 242*l*(b)(3), 284(b)(1)(C), 285g–10, 287c(b), 300cc–15(a)(1), 300cc–41(a)(3)(C), 7403(h)(2).

SOURCE: 61 FR 55111, Oct. 24, 1996, unless otherwise noted.

§ 63a.1 To what programs do these regulations apply?

(a) The regulations of this part apply to:

(1) Grants awarded by the John E. Fogarty International Center for Advanced Study in the Health Sciences, NIH, for training in international cooperative biomedical research endeavors, as authorized under section 307(b)(3) of the Act;

(2) Grants awarded by NIH for research training with respect to the human diseases, disorders, or other aspects of human health or biomedical research for which the institute or other awarding component was established, for which fellowship support is not provided under section 487 of the Act and which is not residency training of physicians or other health professionals, as authorized by sections 405(b)(1)(C), 452G, 485B(b), 2315(a)(1), and 2354(a)(3)(C) of the Act; and,

(3) Grants awarded by the National Institute of Environmental Health

Sciences, NIH, for the education and training of physicians in environmental health, as authorized under section 103(h)(2) of the Clean Air Act, as amended.

(b) The regulations of this part also apply to cooperative agreements awarded to support the training specified in paragraph (a) of this section. References to ''grant(s)'' shall include ''cooperative agreement(s).''

(c) The regulations of this part do not apply to:

(1) Research training support under the National Research Service Awards Program (see part 66 of this chapter);

(2) Research training support under the NIH Center Grants programs (see part 52a of this chapter);

(3) Research training support under traineeship programs (see part 63 of this chapter);

(4) Research training support under the NIH AIDS Research Loan Repayment Program (see section 487A of the Act); or

(5) Research training support under the National Library of Medicine training grant programs (see part 64 of this chapter).

[61 FR 55111, Oct. 24, 1996, as amended at 71 FR 42296, July 26, 2006]

§63a.2 Definitions.

As used in this part:

Act means the Public Health Service Act, as amended (42 U.S.C. 201 *et seq.*).

HHS means the Department of Health and Human Services.

NIH means the National Institutes of Health and its organizational components that award training grants.

Nonprofit as applied to any agency or institution, means an agency or institution which is a corporation or association, no part of the net earnings of which inures or may lawfully inure to the benefit of any private shareholder or individual.

Program director means the single individual named by the grantee in the grant application and approved by the Secretary, who is responsible for the management and conduct of the training program.

Project period See §63a.8(a).

Secretary means the Secretary of Health and Human Services and any other official of HHS to whom the authority involved is delegated.

Stipend means a payment to an individual to help meet that individual's subsistence expenses during the training period.

Training grant means an award of funds to an eligible agency or institution for a training program authorized under §63a.1 to carry out one or more of the purposes set forth in §63a.3.

§63a.3 What is the purpose of training grants?

The purpose of a training grant is to provide financial assistance to an eligible agency or institution to enable it to provide research training to individuals in the diagnosis, prevention, treatment, or control of human diseases or disorders, or other aspects of human health or biomedical research, or in environmental health, in order to increase the number of facilities which provide qualified training and the number of persons having special competence in these fields.

§63a.4 Who is eligible for a training grant?

(a) *General.* Except as otherwise provided in this section or as prohibited by law, any public or private for-profit or nonprofit agency, institution, or entity is eligible for a training grant.

(b) *International training grants for AIDS research.* Any international organization concerned with public health is eligible for a training grant to support individuals for research training relating to acquired immunodeficiency syndrome (AIDS), as authorized under section 2315(a)(1) of the Act. In awarding these grants, preference shall be given to:

(1) Training activities conducted by, or in cooperation with, the World Health Organization and

(2) With respect to training activities in the Western Hemisphere, activities conducted by, or in cooperation with, the Pan American Health Organization or the World Health Organization.

§63a.5 How to apply for a training grant.

Any agency, institution, or entity interested in applying for a grant under this part must submit an application

at the time and in the form and manner that the Secretary may require.

§ 63a.6 How are training grant applications evaluated?

The Secretary shall evaluate applications through the officers and employees, experts, consultants, or groups engaged by the Secretary for that purpose, including review or consultation with the appropriate advisory council or other body as may be required by law. The Secretary's evaluation will be for merit and shall take into account, among other pertinent factors, the significance of the program, the qualifications and competency of the program director and proposed staff, the adequacy of the selection criteria for trainees under the program, the adequacy of the applicant's resources available for the program, and the amount of grant funds necessary for completion of its objectives.

§ 63a.7 Awards.

Criteria. Within the limits of available funds, the Secretary may award training grants for training programs which:

(a) Are determined to be meritorious, and

(b) Best carry out the purposes of the particular statutory program described in § 63a.1 and the regulations of this part.

§ 63a.8 How long does grant support last?

(a) The notice of the grant award specifies how long the Secretary intends to support the project without requiring the grantee to recompete for funds. This period, called the ''project period,'' will usually be for one to five years.

(b) Generally, the grant will be initially for one year and subsequent continuation awards will be for one year at a time. A grantee must submit a separate application at the time and in the form and manner that the Secretary may require to have the support continued for each subsequent year. Decisions regarding continuation awards and the funding level of these awards will be made after consideration of such factors as the grantee's progress and management practices, and the availability of funds. In all cases, continuation awards require determination by the Secretary that continued funding is in the best interest of the Federal Government.

(c) Neither the approval of any application nor the award of any grant commits or obligates the Federal Government in any way to make any additional, supplemental, continuation, or other award with respect to any approved application or portion of an approved application.

(d) Any balance of federally obligated grant funds remaining unobligated by the grantee at the end of a budget period may be carried forward to the next budget period, for use as prescribed by the Secretary, provided that a continuation award is made. If at any time during a budget period it becomes apparent to the Secretary that the amount of Federal funds awarded and available to the grantee for that period, including any unobligated balance carried forward from prior periods, exceeds the grantee's needs for that period, the Secretary may adjust the amounts awarded by withdrawing the excess.

§ 63a.9 What are the terms and conditions of awards?

In addition to the requirements imposed by law, grants awarded under this part are subject to any terms and conditions imposed by the Secretary to carry out the purpose of the grant or assure or protect advancement of the approved program, the interests of the public health, or the conservation of grant funds.

§ 63a.10 How may training grant funds be spent?

(a) *Authorized expenditures; general*. A grantee shall expend funds it receives under this part solely in accordance with the approved application and budget, the regulations of this part, the terms and conditions of the grant award, and the applicable cost principles in 45 CFR 74.27.

(b) *Authorized categories of expenditures*. Subject to any limitations imposed in the approved application and budget or as a condition of the award, grant funds may be expended for the following costs:

(1) Expenses of the grantee in providing training and instruction under the particular program, including salaries of faculty and support personnel, and the costs of equipment and supplies;

(2) Stipends and allowances to individuals during the period of their training and instruction; and,

(3) If separately justified and authorized under the particular program, tuition, fees, and trainee travel expenses which are necessary to carry out the purpose of the training grant.

(c) *Expenditures not authorized.* Grant funds may not be expended for:

(1) Compensation for employment or for the performance of personal services by individuals receiving training and instruction; or

(2) Payments to any individual who does not meet the minimum qualifications for training and instruction established by the grantee and approved by the Secretary or who has failed to demonstrate satisfactory participation in the training in accordance with the usual standards and procedures of the grantee.

§ 63a.11 Other HHS regulations and policies that apply.

Several other HHS regulations and policies apply to this part. These include, but are not necessarily limited to:

42 CFR part 50, subpart A—Responsibility of PHS awardee and applicant institutions for dealing with and reporting possible misconduct in science

42 CFR part 50, subpart D—Public Health Service grant appeals procedure

45 CFR part 16—Procedures of the Departmental Grant Appeals Board

45 CFR part 46—Protection of human subjects

45 CFR part 74—Uniform administrative requirements for awards and subawards to institutions of higher education, hospitals, other nonprofit organizations, and commercial organizations; and certain grants and agreements with states, local governments and Indian tribal governments

45 CFR part 75—Informal grant appeals procedures

45 CFR part 76—Governmentwide debarment and suspension (nonprocurement) and governmentwide requirements for drug-free workplace (grants)

45 CFR part 80—Nondiscrimination under programs receiving Federal assistance through the Department of Health and Human Services effectuation of title VI of the Civil Rights Act of 1964

45 CFR part 81—Practice and procedure for hearings under part 80 of this title

45 CFR part 84—Nondiscrimination on the basis of handicap in programs and activities receiving Federal financial assistance

45 CFR part 86—Nondiscrimination on the basis of sex in education programs and activities receiving or benefiting from Federal financial assistance

45 CFR part 91—Nondiscrimination on the basis of age in HHS programs or activities receiving Federal financial assistance

45 CFR part 92—Uniform administrative requirements for grants and cooperative agreements to State and local governments

45 CFR part 93—New restrictions on lobbying

59 FR 14508 (March 28, 1994)—NIH Guidelines on the Inclusion of Women and Minorities as Subjects in Clinical Research. [Note: this policy is subject to change, and interested persons should contact the Office of Research on Women's Health, NIH, Room 201, Building 1, MSC 0161, Bethesda, MD 20892–0161 (301–402–1770; not a toll-free number) to obtain references to the current version and any amendments.]

59 FR 34496 (July 5, 1994)—NIH Guidelines for Research Involving Recombinant DNA Molecules. [Note: this policy is subject to change, and interested persons should contact the Office of Recombinant DNA Activities, NIH, Suite 323, 6000 Executive Boulevard, MSC 7010, Bethesda, MD 20892–7010 (301–496–9838; not a toll-free number) to obtain references to the current version and any amendments.]

''NIH Grants Policy Statement,'' (December 1, 2003). This version is located on the NIH Web site at: *http://grants./policy/nihgps__2003/index.htm.*

[NOTE: this policy is subject to change, and interested persons should contact the Office of Policy for Extramural Research Administration (OPERA), Office of Extramural Research, NIH, 6701 Rockledge Drive, Suite 350, MSC 7974, Bethesda, Maryland 20892–7974, telephone 301–435–0938 (or toll-free 800–518–4726), to obtain references to the current version and any amendments. Information may also be obtained by contacting the OPERA Division of Grants Policy via e-mail at *http://GrantsPolicy@mail.nih.gov*. Previous versions of the NIH Grants Policy Statement are archived at *http://grants.nih.gov/grantspolicy/policy.htm.*]

''Public Health Service Policy on Humane Care and Use of Laboratory Animals,'' Office of Laboratory Animal Welfare (Amended August, 2002).

[NOTE: this policy is subject to change, and interested persons should contact the Office of Laboratory Animal Welfare, 6705

Rockledge Drive, Suite 360, MSC 7982, Bethesda, Maryland 20892–7982, telephone 301–594–2382 (not a toll-free number), to obtain references to the current version and any amendments. Information may also be obtained by browsing the Office of Laboratory Animal Welfare Home Page site on the World Wide Web (*http://www.grants.nih.gov/grants/olaw/olaw.htm*).]

[61 FR 55111, Oct. 24, 1996, as amended at 71 FR 42296, July 26, 2006]

PART 64—NATIONAL LIBRARY OF MEDICINE TRAINING GRANTS

Sec.
64.1 Programs to which these regulations apply.
64.2 Definitions.
64.3 Who is eligible for a grant?
64.4 How to apply for a grant.
64.5 How are grant applications evaluated?
64.6 Awards.
64.7 What other conditions apply?
64.8 How may funds be used?
64.9 Other HHS regulations that apply.

AUTHORITY: 42 U.S.C. 216, 286b–3.

SOURCE: 56 FR 29192, June 26, 1991, unless otherwise noted.

§ 64.1 Programs to which these regulations apply.

(a) The regulations of this part apply to grants under section 472 of the Public Health Service Act (42 U.S.C. 286b–3) to public and private nonprofit institutions to assist in developing, expanding, and improving training programs (excluding training in a biomedical specialty and residency training) in library science and the field of communications of information pertaining to sciences relating to health.

(b) The regulations of this part also apply to cooperative agreements awarded for these purposes. References to ''grant(s)'' shall include ''cooperative agreement(s).''

(c) The regulations of this part do not apply to research training support under the National Research Service Awards Program (see part 66 of this chapter).

§ 64.2 Definitions.

As used in this part:

HHS means the Department of Health and Human Services.

Nonprofit private entity means an agency, organization, institution, or other entity which may not lawfully hold or use any part of its net earnings to the benefit of any private shareholder or individual which does not hold or use its net earnings for that purpose.

Other trainee costs means those costs other than stipends, such as tuition, fees, and trainee travel, which are directly associated with and necessary for the training of individuals receiving stipends and which are incurred within the period of training.

Project director means the single individual named by the grantee in the grant application and approved by the Secretary, who is responsible for the management and conduct of the project.

Project period. See § 64.6(b).

Secretary means the Secretary of Health and Human Services and any other official of HHS to whom the authority involved is delegated.

Stipend means a payment to an individual that is intended to help meet that individual's subsistence expenses during training.

Training grant means an award of funds to an eligible entity for a project authorized under § 64.1(a).

§ 64.3 Who is eligible for a grant?

Except as otherwise prohibited by law, any public or private nonprofit entity is eligible for a training grant.

§ 64.4 How to apply for a grant.

Applications for grants must include the following information:

(a) *Required information on the proposed project*. (1) The nature, duration, and purpose of the training for which the application is filed.

(2) The name and qualifications of the project director and any key personnel responsible for the proposed project.

(3) A description of the facilities, staff, support services, and other organizational resources available to carry out the project.

(4) The intended number of trainees and the minimum qualifications and criteria for their selection.

(5) A description of the plan for evaluating the proposed project.

(6) Other pertinent information the Secretary may require to evaluate the proposed project.

(b) *Required information on costs.* (1) A budget for the proposed project and a justification of the amount of grant funds requested.

(2) If institutional expenses are requested, a separate statement of the amounts requested for personal services, equipment, supplies, or other nonpersonal services.

(3) If stipend costs are requested, a statement for each grant year of the estimated number of individuals to whom stipends will be provided and the length of time for which the stipend support will be provided. If other trainee costs are requested, they must be separately stated and justified.

(Approved by the Office of Management and Budget under control number 0925–0276)

§ 64.5 How are grant applications evaluated?

The Secretary shall evaluate applications through the officers and employees, experts, consultants, or groups engaged by the Secretary for that purpose. The Secretary's evaluation will be for technical merit and shall take into account, among other pertinent factors, the significance of the project, the qualifications and competency of the project director and proposed staff, the adequacy of selection criteria for trainees for the project, the adequacy of the applicant's resources available for the project, and the amount of grant funds necessary for completion of its objectives.

§ 64.6 Awards.

(a) *Criteria.* Within the limits of available funds, the Secretary may award training grants to carry out those projects which:

(1) Are determined by the Secretary to be technically meritorious; and

(2) In the judgment of the Secretary best promote the purpose of the grant program as authorized by section 472 of the Act (42 U.S.C. 286b–3), the regulations of this part (see § 64.1), and address program priorities.

(b) *Project period.* (1) The notice of grant award specifies how long the Secretary intends to support the project without requiring the project to compete for funds. This period, called the project period, will usually be for one to five years.

(2) Generally, the grant will initially be for one year and subsequent continuation awards will also be for one year at a time. A grantee must submit a separate application to have the support continued for each subsequent year. Decisions regarding continuation awards and the funding level of these awards will be made after consideration of such factors as the grantee's progress and management practices, and the availability of funds. In all cases, continuation awards require a determination by the Secretary that continued funding is in the best interest of the Federal Government.

(3) Neither the approval of any application nor the award of any grant commits or obligates the Federal Government in any way to make any additional, supplemental, continuation, or other award with respect to any approved application or portion of an approved application.

(4) Any balance of federally obligated grant funds remaining unobligated by the grantee at the end of a budget period may be carried forward to the next budget period, for use as prescribed by the Secretary, provided a continuation award is made. If at any time during a budget period it becomes apparent to the Secretary that the amount of Federal funds awarded and available to the grantee for that period, including any unobligated balance carried forward from prior periods, exceeds the grantee's needs for that period, the Secretary may adjust the amounts awarded by withdrawing the excess.

§ 64.7 What other conditions apply?

(a) Grants awarded under this part are subject to the following conditions:

(1) The grantee may not materially change the quality, nature, or duration of the project unless the written approval of the Secretary is obtained prior to the change.

(2) The grantee must submit to the Secretary, in the manner prescribed by the Secretary, the name and other pertinent information regarding each individual who is awarded a stipend under a grant.

(b) The Secretary may impose additional conditions prior to the award of any grant under this part if it is determined by the Secretary that the conditions are necessary to carry out the purpose of the grant.

(Approved by the Office of Management and Budget under control number 0925–0276)

§ 64.8 How may funds be used?

A grantee shall expend funds it receives under this part solely in accordance with the approved application and budget, the regulations of this part, the terms and conditions of the grant award, and the applicable cost principles in subpart Q of 45 CFR part 74. The funds may not be expended for:

(a) Compensation for employment or for the performance of personal services by individuals receiving training and instruction; or

(b) Payments to any individual who does not meet the minimum qualifications for training and instruction established by the grantee and approved by the Secretary or who has failed to demonstrate satisfactory participation in the training in accordance with the usual standards and procedures of the grantee.

§ 64.9 Other HHS regulations that apply.

Several other regulations apply to grants under this part. These include, but are not necessarily limited to:

42 CFR part 50, subpart D—Public Health Service grant appeals procedure.
45 CFR part 16—Procedures of the Departmental Grant Appeals Board.
45 CFR part 74—Administration of grants.
45 CFR part 75—Informal grant appeals procedures.
45 CFR part 76—subparts A–F.
Governmentwide debarment and suspension (nonprocurement) and requirements for drug-free workplace (grants).
45 CFR part 80—Nondiscrimination under programs receiving Federal assistance through the Department of Health and Human Services—effectuation of title VI of the Civil Rights Act of 1964.
45 CFR part 81—Practice and procedure for hearings under 45 CFR part 80 of this title.
45 CFR part 84—Nondiscrimination on the basis of handicap in programs and activities receiving or benefiting from Federal financial assistance.
45 CFR part 86—Nondiscrimination on the basis of sex in education programs and activities receiving or benefiting from Federal financial assistance.
45 CFR part 91—Nondiscrimination on the basis of age in HHS programs or activities receiving Federal financial assistance.
45 CFR part 92—Uniform administrative requirements for grants and cooperative agreements to state and local governments.

PART 64a—OBLIGATED SERVICE FOR MENTAL HEALTH TRAINEESHIPS

Sec.
64a.101 Purpose.
64a.102 To whom do these regulations apply?
64a.103 Definitions.
64a.104 What requirements are imposed upon grantees?
64a.105 What are the conditions of obligated service?

AUTHORITY: Sec. 803, Pub. L. 96–398, 94 Stat. 1607–1608 (42 U.S.C. 242a).

SOURCE: 46 FR 39979, Aug. 5, 1981, unless otherwise noted.

§ 64a.101 Purpose.

This part establishes requirements to implement the service payback obligation of individuals who receive clinical traineeships in pyschology, psychiatry, social work, or nursing (that are not of limited duration or experimental nature) under section 303 of the Public Health Service Act.

§ 64a.102 To whom do these regulations apply?

This part applies to any institution which receives a training grant under section 303 of the Public Health Service Act and to any individual who receives a stipend or other trainee allowances under such a grant for any period beginning on or after July 1, 1981, for clincial training in the field of psychology, psychiatry, nursing, or social work, except for training that is of a limited duration or experimental nature.

§ 64a.103 Definitions.

As used in this part:

Act means the Public Health Service Act as amended by Pub. L. 96–398.

Clinical traineeship means a stipend or other trainee allowances provided to an individual for clinical training in psychology, psychiatry, nursing, or social

work, except for training that is of a limited duration or experimental nature, under a training grant authorized by section 303 of the Act.

Community Mental Health Centers Act means the Community Mental Health Centers Act (42 U.S.C. 2689 *et seq.*) other than Part D thereof.

Experimental nature refers to the training of undergraduates; the training of individuals in disciplines other than psychology, psychiatry, nursing, or social work; and any other training which the Secretary specifically designates as experimental in the notice of award for a training grant under section 303 of the Act.

Limited duration means a period that is equal to or less than 180 days, computed cumulatively over a two year period which begins on the first day of the clinical traineeship.

Mental Health Systems Act means the Mental Health Systems Act (42 U.S.C. 9401 *et seq.*).

Nonprofit private entity means an agency, organization, institution or other entity which may not lawfully hold or use any part of its net earnings to the benefit of any private shareholder or individual and which does not hold or use its net earnings for that purpose.

Other trainee allowances means financial assistance for those costs not covered by stipends, such as tuition, fees, and trainee travel, which are directly associated with and necessary to the training of individuals receiving stipends and are incurred within the period of training.

Secretary means the Secretary of Health and Human Services or other official of the Department to whom the authority involved has been delegated.

Stipend means financial assistance to an individual that is intended to help meet that individual's subsistence expenses during training.

§ 64a.104 What requirements are imposed upon grantees?

Recipients of training grants under section 303 of the Act that provide a clinical traineeship to any individual must:

(a) Give each such individual written notice of the service payback and recovery requirements of this part at the time the individual becomes a candidate for the traineeship;

(b) Before awarding a clinical traineeship, conduct an entrance interview with the individual in order to explain and emphasize the service obligation the individual is incurring, obtain the individual's written assurance that he or she will satisfy the requirements of § 64a.105, and document, in accordance with paragraph (d) of this section, the entrance interview on the form containing the individual's written assurance.

(c) At the time of termination of the clinical traineeship,

(1) Notify the Secretary in writing of the date on which the individual's traineeship is terminated;

(2) Conduct an exit interview with the individual to remind the trainee of the service obligation, to fully explain the consequences that will incur should the trainee fail to satisfy the obligation, and, to tell the individual that the Secretary has been notified of the date of termination of the traineeship; and

(3) Document, in accordance with paragraph (d) of this section, the exit interview on the form notifying the Secretary of the termination of the traineeship.

(d) Document the entrance and exit interviews with at least the following information: The date of the interview, the names of the participants involved in the interview, and a statement that the interview included an explanation to the individual of the service payback requirement and the consequences of failing to fulfill the service payback requirement.

(Approved by the Office of Budget and Management under control number 0930–0120)

[46 FR 39979, Aug. 5, 1981, as amended at 52 FR 18359, May 15, 1987]

§ 64a.105 What are the conditions of obligated service?

In order to receive a clinical traineeship an individual must comply with the following conditions:

(a) *Written assurance.* Prior to the award of a clinical traineeship, the individual must sign a written assurance (in such form and manner as the Secretary prescribes) that he or she will

satisfy the requirements of this section.

(b) *Commencement and crediting of service.* (1) An individual must start the obligated service within twenty-four months after termination of the clinical traineeship and carry out the service on a continuous basis unless, as specified in paragraph (e) of this section, the individual has requested and had approved, respectively, an extension of the time for beginning the service, or a break in service.

(2) Following termination of the traineeship, the individual must annually provide (in such form and manner as the Secretary prescribes) a written report describing those previous years' activities which are related to service that fulfills the payback obligation. The Secretary will review this report and credit all service performed in those categories specified in paragraph (d) of this section toward the individual's payback obligation, except any service which is performed:

(i) Before termination of the individual's clinical traineeship; and

(ii) As part of any activity, such as course work, preparation of a dissertation or thesis, or practicum, which is needed to complete the training for which the individual received the traineeship.

(c) *Duration of obligation.* The period of service payback must equal the period of support under the clinical traineeship on a month for month basis.

(d) *Performance of the obligated service*—(1) *General requirements.* The obligated service must consist of the provision of service for which the individual was trained (in the training program for which the clinical traineeship was received) and must be performed on a full-time basis (not less than 30 hours per week averaged over the obligated service period).

(2) *Preferred service.* Except as provided under paragraph (d)(3) of this section, the individual must provide the obligated service in:

(i) A public inpatient mental institution;

(ii) Any entity which is receiving or has received a grant under the Mental Health Systems Act or the Community Mental Health Centers Act;

(iii) A psychiatric manpower shortage area designated by the Secretary under section 332 of the Public Health Service Act and 42 CFR part 5;

(iv) Any public or private nonprofit entity or in any nursing home (whether public, private nonprofit, or for profit) in which 50 percent or more of those served are within one or more of the following groups: Racial or ethnic minorities (American Indian or Alaskan Native, Asian or Pacific Islander, Black, Hispanic), chronically mentally ill, mentally retarded, criminal or delinquent populations, rape victims, physically handicapped, abusers of alcohol, or persons addicted to drugs or other substances, children and adolescents, the elderly, poverty populations, migrants, members of the armed forces (or veterans if seen in a Federal facility), residents of areas other than those defined as urbanized by the Department of Commerce, or any other special populations, such as groups of refugees or disaster victims, which are specifically designated by the Secretary for this purpose.

(3) *Alternate service.* If the individual obtains the written approval of the Secretary, the individual may fulfill his or her obligation by:

(i) Serving in any public or private nonprofit entity or in any nursing home (whether public, private nonprofit, or for profit) in which not less than 25 percent of those served are within one or more of the underserved population groups listed in paragraph (d)(2)(iv) of this section. The individual must demonstrate a service commitment of more than 50 percent of his or her time to the targeted populations.

(ii) Teaching, conducting research, or conducting evaluation directed at improving alcohol, drug abuse or mental health services to one or more of the priority population groups listed in paragraph (d)(2)(iv) of this section, or working in a position which fosters the closer collaboration of health and alcohol, drug abuse or mental health services.

(iii) Providing in a public or private nonprofit entity consultation, training and education, liaison, community support or other professional services for which the individual was trained when

the individual's work is directed toward improving alcohol, drug abuse or mental health services to the priority populations listed in paragraph (d)(2)(iv) of this section.

(e) *Conditions for deferral or break in service, waiver, or cancellation.* (1) Upon receipt of a written request showing good cause therefor by the individual having a payback obligation, the Secretary may:

(i) Extend the period for beginning the obligated service (24 months after termination of the clinical traineeship), permit breaks in the required continuous service or extend the period for repayment under paragraph (g)(2) of this section, if it is determined that:

(A) An extension or break in service is necessary for the completion of training;

(B) Performance of the obligation must be delayed because a temporary disability makes present performance impossible; or

(C) Performance of the obligation must be delayed because present performance would involve a substantial hardship and failure to extend the period would be against equity and good conscience.

(ii) Waive, in whole or in part, the service payback and recovery requirements of this section if it is determined that fulfillment would be impossible because the individual is permanently and totally disabled.

(iii) In making determinations under §64a.105(e)(1)(i)(C), the Secretary will take into consideration the following factors:

(A) The individual's present financial resources and obligations;

(B) The individual's estimated future financial resources and obligations;

(C) The reasons for the individual's failure to complete the requirements within the prescribed period, such as problems of a personal nature;

(D) The unavailability of employment opportunities appropriate to the individual's education and training; and

(E) Any other extenuating circumstances.

(2) Upon receipt of written notice giving evidence of a conflicting obligation under section 752 or 753 of the Act or of an election to fulfill an obligation under section 472 of the Act prior to an obligation under this section, the Secretary will extend the period for beginning service (24 months after termination of the clinical traineeship), permit breaks in the required continuous service or extend the period for repayment under paragraph (g)(1), as appropriate.

(3) The service payback and recovery obligations of an individual will be cancelled upon the submission to the Secretary of a certificate of that individual's death or other evidence which the Secretary determines to be satisfactory.

(f) *Conflicting or multiple payback obligations.* In any case where the individual has, in addition to a payback obligation incurred under this section, an obligation to perform service under section 752 or 753 of the Act (because of receipt of a National Health Service Corps scholarship) or under section 472 of the Act (because of receipt of a National Research Service Award), or both, performance of the same activity may not be counted toward more than one of these obligations. In determining the order in which obligations must be fulfilled, obligations under section 752 or 753 take precedence over obligations incurred under this section. However, with respect to obligations under this section and 472, the individual may elect which obligation to fulfill first. Any individual who has an obligation under section 752 or 753 or makes an election to fulfill an obligation under section 472 prior to an obligation under this section, must give written notice to the Secretary as provided by paragraph (e)(3) of this section.

(g) *Recovery for failure to perform obligated service.* (1) If an individual fails to begin or complete the obligated service in accordance with the requirements of paragraphs (a) through (f) of this section, that individual is obligated to repay the United States an amount equal to three times the cost of the award (including stipends and other trainee allowances) plus interest on that amount calculated for the total period since the trainee failed to perform the obligated service at the rate set by the Secretary of the Treasury

for National Research Service Awards prevailing on the date on which the period of appointment begins, multiplied, in any case in which the service that was required has been performed in part, by the percentage which the length of service that was not performed is to the length of the service that was required to be performed. The amount will be determined under the following formula:

$$A = 3(\theta + mi\theta)\frac{(t-s)}{(t)}$$

where

A = the amount the United States is entitled to recover;

θ = the cost of the clinical traineeship (including stipends and other trainee allowances);

m = the number of months since the trainee failed to perform obligated service;

i = the National Research Service Award rate on the date which the period of appointment begins divided by twelve;

t = the total number of months of the service obligation;

s = the number of months that have been served.

(2) Unless the Secretary extends the repayment period as provided in paragraph (e) of this section, the individual shall pay to the United States the total amount which the United States is entitled to recover under paragraph (g)(1) of this section immediately upon the date that the individual fails to begin or complete the period of obligated service (including failing to comply with the applicable terms and conditions of an extension or break in service granted the individual) or upon the date that the individual indicates his or her intention not to fulfill the service obligation as determined by the Secretary. The amount is considered a debt owed to the United States, with interest accruing monthly upon the total debt as provided under paragraph (g)(1) of this section.

[46 FR 39979, Aug. 5, 1981, as amended at 52 FR 18359, May 15, 1987]

PART 65—NATIONAL INSTITUTE OF ENVIRONMENTAL HEALTH SCIENCES HAZARDOUS WASTE WORKER TRAINING

Sec.
65.1 To what projects do these regulations apply?
65.2 Definitions.
65.3 Who is eligible to apply for a grant?
65.4 Project requirements.
65.5 How will applications be evaluated?
65.6 How long does grant support last?
65.7 For what purposes may grant funds be spent?
65.8 What additional Department regulations apply to grantees?
65.9 Additional conditions.

AUTHORITY: 42 U.S.C. 9660a; 49 U.S.C. App. 1816.

SOURCE: 55 FR 42568, Oct. 22, 1990, unless otherwise noted.

§ 65.1 To what projects do these regulations apply?

(a) The regulations in this part apply to:

(1) The program of grants for the training and education of workers who are or are likely to be engaged in activities related to hazardous waste removal or containment, or emergency response that is authorized under section 126(g) of the SARA; and

(2) The program of grants to support qualified non-profit organizations for the purpose of providing training and education to hazardous materials employees regarding: the safe unloading, loading, handling, storage, and transportation of hazardous materials; and, emergency preparedness for responding to accidents or incidents involving the transportation of hazardous materials that is authorized under section 118 of the HMTA.

(b) Grants are available for curriculum and training materials development, technical support of training, direct student training, training program evaluation and related activities. Target populations for this training are workers and supervisors who are or are likely to be engaged in hazardous substance removal or other activities which expose or potentially expose these workers to hazardous substances in activities such as:

(1) Waste handling and processing at waste generators and active and inactive hazardous substance treatment, storage, and disposal facilities;

(2) Clean up, removal, containment, or remedial actions at waste sites;

(3) Hazardous substance emergency response;

(4) Hazardous substance disposal site risk assessment and investigation, clean up, or remedial actions; and

(5) Transportation of hazardous wastes.

Target populations may also be regulated under standards promulgated by the Secretary of Labor, the Secretary of Transportation, the Administrator of the Environmental Protection Agency, and other agencies under section 126(g) of the SARA or section 106(b) of the HMTA.

(c) Two types of grants are available: Program grants covering the full range of activities, including program development, direct worker training and education, and program evaluation; and planning grants under the SARA.

(1) Planning grants are intended to assist organizations which demonstrate potential for providing hazardous worker training, but need additional developmental efforts prior to initiation of full curriculum development and training activities. A limited number of one-year planning grants may be funded at a level determined appropriate by the Director. After successful completion of a one-year planning grant, a recipient may apply for a full program grant on a competitive basis.

(2) Full program grants will be awarded to organizations with demonstrated capability to provide worker health and safety training and education and demonstrated ability to identify, describe, and access target populations. Full program grantees must be able to immediately initiate curriculum development and worker training activities.

[55 FR 42568, Oct. 22, 1990; 59 FR 64141, Dec. 13, 1994]

§ 65.2 Definitions.

As used in this part:

Award or *grant* means a grant or cooperative agreement made under section 126(g) of the SARA or section 118 of the HMTA.

Director means the Director, National Institute of Environmental Health Sciences, or the Director's delegate.

HHS means the Department of Health and Human Services.

HMTA means the Hazardous Materials Transportation Act, as amended (49 U.S.C. App. 1801 *et seq.*).

NIEHS means the National Institute of Environmental Health Sciences, an organizational component of the National Institutes of Health, as authorized by sections 401(b)(1)(L) and 463 of the Public Health Service Act (42 U.S.C. 281(b)(1)(L) and 285(l).

NIH means the National Institutes of Health.

Nonprofit as applied to any agency, organization, institution, or other entity means a corporation or association no part of the net earnings of which inures or may lawfully inure to the benefit of any private shareholder or individual.

SARA means the Superfund Amendments and Reauthorization Act of 1986, Public Law 99–499, as amended (42 U.S.C. 9601 *et seq.*).

Stipend means a payment to an organization that is intended to help meet that organization's subsistence expenses for trainees during the training period.

Training grant means an award of funds to an eligible entity for a project authorized under § 65.1.

[55 FR 42568, Oct. 22, 1990; 59 FR 64141, Dec. 13, 1994]

§ 65.3 Who is eligible to apply for a grant?

Public and private nonprofit entities providing worker health and safety education and training may apply for grants under these regulations. Applicants for a grant may use services, as appropriate, of other public or private organizations necessary to develop, administer, or evaluate proposed worker training programs so long as the majority of the work is done by the applicant.

§ 65.4 Project requirements.

In addition to meeting the requirements specified in the application, the instructions accompanying it, and the regulations referred to in § 65.8, each

applicant must meet the following requirements:

(a) Two or more nonprofit organizations may join in a single application and share grant resources in order to maximize worker group coverage, enhance the effectiveness of training, and bring together appropriate academic disciplines and talents. Joint applications must describe the cooperative arrangements for program integration and effectiveness. Specific expertise, facilities, or services to be provided by each participating member must be identified.

(b) Each applicant must detail the nature, duration, and purpose of the training for which the application is filed. The proposed training program must meet the standards promulgated by the Secretary of Labor and Secretary of Transportation under section 126(g) of the SARA or section 106(b) of the HMTA, and such additional requirements as the Director may prescribe to ensure appropriate health and safety training.

(c) The applicant must provide assurance that the applicant will not discriminate in the selection of trainees or instructors on the basis of membership or nonmembership in a union.

[55 FR 42568, Oct. 22, 1990; 59 FR 64141, Dec. 13, 1994]

§ 65.5 How will applications be evaluated?

(a) The Director shall evaluate applications through the officers and employees, and experts and consultants engaged by the Director for that purpose. The Director's first level of evaluation will be for technical merit and shall take into account, among other pertinent factors, the significance of the project, the qualifications and competency of the project director and proposed staff (including the ability to manage complex training programs), the adequacy of selection criteria for trainees for the project, the adequacy of the detailed training plan including provision for hands-on training, the adequacy of the applicant's resources available for the project, the amount of grant funds necessary for completion of its objectives, and how well the projects meet training criteria in OSHA's Hazardous Waste Operations and Emergency Response Regulation (29 CFR 1910.120) and/or how well they cover the target populations listed in § 65.1(b). A second level of review will be conducted for program relevance.

(b) Within the limits of funds available, the Director may award training grants to carry out those projects which have satisfied the requirements of the regulations of this part; are determined by the Director to be technically meritorious; and in the judgment of the Director best promote the purposes of the grant programs authorized by section 126(g) of the SARA or section 118 of the HMTA, the regulations of this part, and program priorities.

[55 FR 42568, Oct. 22, 1990; 59 FR 64141, Dec. 13, 1994]

§ 65.6 How long does grant support last?

(a) The notice of grant award specifies how long NIEHS intends to support the project without requiring the project to recompete for funds. This period, called the project period, will usually be for 1–5 years.

(b) Generally, the grant will initially be for one year and subsequent continuation awards will also be for one year at a time. A grantee must submit a separate application to have the support continued for each subsequent year. Decisions regarding continuation awards and the funding level of such awards will be made after consideration of such factors as the grantee's progress and management practices and the availability of funds. In all cases, continuation awards require a determination by the NIEHS that continued funding is in the best interest of the Federal Government.

(c) Neither the approval of any application nor the award of any grant commits or obligates the Federal Government in any way to make any additional, supplemental, continuation, or other award with respect to any approved application or portion of an approved application.

§ 65.7 For what purposes may grant funds be spent?

Individuals receiving training shall be entitled only to the stipends and allowances included in a budget approved

by the Director, taking into account the cost of living and such other factors as the needs of the program and the availability of funds.

§65.8 What additional Department regulations apply to grantees?

Several other regulations and policies apply to grants under this part. These include, but are not limited to:

42 CFR part 50, subpart D—Public Health Service grant appeals procedure.
45 CFR part 16—Procedures of the Departmental Grant Appeals Board.
45 CFR part 74—Administration of grants.
45 CFR part 75—Informal grant appeals procedures.
45 CFR part 76, subparts A–F—Government-wide debarment and suspension (non-procurement) and government-wide requirements for drug-free workplace (grants).
45 CFR part 80—Nondiscrimination under programs receiving Federal assistance through the Department of Health and Human Services—Effectuation of title VI of the Civil Rights Act of 1964.
45 CFR part 81—Practice and procedure for hearings under part 80 of this title.
45 CFR part 84—Nondiscrimination on the basis of handicap in programs and activities receiving or benefiting from Federal financial assistance.
45 CFR part 86—Nondiscrimination on the basis of sex in education programs and activities receiving or benefiting from Federal financial assistance.
45 CFR part 91—Nondiscrimination on the basis of age in Health and Human Services programs and activities receiving Federal financial assistance.
45 CFR part 92—Uniform Administrative Requirements for Grants and Cooperative Agreements to State and local Governments.
45 CFR part 93—New restrictions on lobbying.

§65.9 Additional conditions.

The Director may with respect to any award impose additional conditions prior to, or at the time of, any award when, in the Director's judgment, such conditions are necessary to assure the carrying out of the purposes of the award, the interest of the public health, or the conservation of funds awarded.

PART 65a—NATIONAL INSTITUTE OF ENVIRONMENTAL HEALTH SCIENCES HAZARDOUS SUBSTANCES BASIC RESEARCH AND TRAINING GRANTS

Sec.
65a.1 To what programs do these regulations apply?
65a.2 Definitions.
65a.3 Who is eligible to apply for a grant?
65a.4 What are the program requirements?
65a.5 How to apply.
65a.6 How will applications be evaluated?
65a.7 Awards.
65a.8 How long does grant support last?
65a.9 What are the terms and conditions of award?
65a.10 For what purposes may grant funds be spent?
65a.11 Other HHS regulations and policies that apply.

AUTHORITY: 42 U.S.C. 216, 9660(a).

SOURCE: 61 FR 55114, Oct. 24, 1996, unless otherwise noted.

§65a.1 To what programs do these regulations apply?

(a) The regulations of this part apply to the award of grants to support programs for basic research and training directed towards understanding, assessing, and attenuating the adverse effects on human health resulting from exposure to hazardous substances, as authorized under section 311(a) of the Act (42 U.S.C. 9660(a)). The purpose of these programs is to carry out coordinated, multi-component, interdisciplinary research consisting of at least three or more biomedical research projects relating to hazardous substances and at least one non-biomedical research project in the fields of ecology, hydrogeology, and/or engineering, and including the training of investigators as part of the grantee's overall program.

(b) The regulations of this part also apply to cooperative agreements awarded to support the programs described in paragraph (a) of this section. References to ''grant(s)'' shall include ''cooperative agreement(s).''

(c) The regulations of this part do not apply to:

(1) Research training support under the National Research Service Awards Program (see part 66 of this chapter),

(2) Research, demonstration, and training support under the NIH Center Grants programs (see part 52a of this chapter),

(3) Research training support under traineeship programs (see parts 63 and 64a of this chapter), or

(4) Research training support under the NIH AIDS Research Loan Repayment Program authorized under section 487A of the Public Health Service Act, as amended (42 U.S.C. 288–1).

§ 65a.2 Definitions.

As used in this part:

Act means the Comprehensive Environmental Response, Compensation, and Liability Act of 1980, as amended (42 U.S.C. 9601 *et seq.*).

Award or *grant* means a grant or cooperative agreement awarded under section 311(a) of the Act (42 U.S.C. 9660(a)).

Director means the Director of the National Institute of Environmental Health Sciences, or the Director's delegate.

HHS means the Department of Health and Human Services.

Institution of higher education means an educational institution in any state which (1) admits as regular students only persons having a certificate of graduation from a school providing secondary education, or the recognized equivalent of such a certificate, (2) is legally authorized within the state to provide a program of education beyond secondary education, (3) provides an educational program for which it awards a bachelor's degree or provides not less than a two-year program which is acceptable for full credit toward a bachelor's degree, (4) is a public or other nonprofit institution, and (5) is accredited by a nationally recognized accrediting agency or association or, if not so accredited, (i) is an institution with respect to which the Secretary of Education has determined that there is satisfactory assurance, considering the resources available to the institution, the period of time, if any, during which it has operated, the effort it is making to meet accreditation standards, and the purpose for which this determination is being made, that the institution will meet the accreditation standards of a nationally recognized accrediting agency or association within a reasonable time, or (ii) is an institution whose credits are accepted, on transfer, by not less than three institutions which are so accredited, for credit on the same basis as if transferred from an institution so accredited. The term also includes any school which provides not less than a one-year program of training to prepare students for gainful employment in a recognized occupation and which meets the provisions of paragraphs (1), (2), (4), and (5) of this definition. The term also includes a public or nonprofit private educational institution in any state which, in lieu of the requirement in paragraph (1), admits as regular students persons who are beyond the age of compulsory school attendance in the state in which the institution is located and who meet the requirements of section 1091(d) of title 20 U.S. Code, as amended. For purposes of this definition, the Secretary of Education publishes a list of nationally recognized accrediting agencies or associations which that official determines to be reliable authority as to the quality of training offered. This list is found in the brochure, ''Nationally Recognized Accrediting Agencies and Associations Criteria and Procedures for Listing by the U.S. Secretary of Education and Current List.''

[NOTE: This brochure is subject to change, and interested persons should contact the U.S. Department of Education Office of Post-Secondary Education, Accreditation and State Liaison Division, ROB 3, 7th and D Streets, S.W., Room 37–15, Washington, DC 20202–5244 (202–708–7417; not a toll-free number) to obtain a current version of the brochure and any amendments.]

NIEHS means the National Institute of Environmental Health Sciences, an organizational component of the National Institutes of Health, as authorized under sections 401(b) and 463 of the Public Health Service Act, as amended (42 U.S.C. 281(b) and 185*l*).

NIH means the National Institutes of Health.

Nonprofit, as applied to any agency, organization, institution, or other entity, means a corporation or association

no part of the net earnings of which insures or may lawfully inure to the benefit of any private shareholder or individual.

PHS means the Public Health Service.

Program means the activity to carry out research and training supported by a grant under this part.

Program director means the single individual designated by the grantee in the grant application and approved by the Director, who is responsible for the scientific and technical direction of the research component and the conduct of the training component under a program.

Project period means the period of time, from one to five years, specified in the notice of grant award that NIEHS intends to support a proposed program without requiring the program awardee to recompete for funds.

Secretary means, unless the context otherwise requires, the Secretary of Health and Human Services or other official of HHS to whom the authority involved is delegated.

§ 65a.3 Who is eligible to apply for a grant?

(a) Except as otherwise prohibited by law, any public or private nonprofit institution of higher education may apply for an award under this part.

(b) Awardee institutions may carry out portions of the research or training components of an award through contracts with appropriate organizations, including:

(1) Generators of hazardous wastes;

(2) Persons involved in the detection, assessment, evaluation, and treatment of hazardous substances;

(3) Owners and operators of facilities at which hazardous substances are located; and

(4) State and local governments.

§ 65a.4 What are the program requirements?

The applicant shall include the following in its proposed program for which support is requested under this part:

(a) *Basic research component*. The program shall include three or more meritorious biomedical research projects, including epidemiologic studies relating to the study of the adverse effects of hazardous substances on human health, and at least one meritorious project involving hydrogeologic or ecologic research which shall cumulatively address:

(1) Methods and technologies to detect hazardous substances in the environment;

(2) Advanced techniques for the detection, assessment, and evaluation of the effects of these substances on human health;

(3) Methods to assess the risks to human health presented by these substances; and

(4) Basic biological, chemical, and/or physical methods to reduce the amount and toxicity of these substances.

(b) *Training component*. The program shall include the following kinds of training, as part of or in conjunction with the basic research component:

(1) Graduate training in environmental and occupational health and safety and in public health and engineering aspects of hazardous waste control; and/or

(2) Graduate training in the geosciences, including hydrogeology, geological engineering, geophysics, geochemistry, and related fields, necessary to meet professional personnel needs in the public and private sectors and to carry out the purposes of the Act; and

(3) Worker training relating to handling hazardous substances, which includes short courses and continuing education for state and local health and environmental agency personnel and other personnel engaged in the handling of hazardous substances, in the management of facilities at which hazardous substances are located, and in the evaluation of the hazards to human health presented by these facilities.

§ 65a.5 How to apply.

Each institution desiring a grant under this part must submit an application at the time and in the form and manner as the Secretary may require.

§ 65a.6 How will applications be evaluated?

The Director shall evaluate applications through the officers and employees, experts, consultants, or groups engaged by the Director for that purpose, including review by the National Advisory Environmental Health Sciences Council in accordance with peer review requirements set forth in part 52h of this chapter. The Director's first level of evaluation will be for technical merit and shall take into account, among other pertinent factors, the significance of the program, the qualifications and competency of the program director and proposed staff, the adequacy of the applicant's resources available for the program, and the amount of grant funds necessary for completion of its objectives. A second level of review will be conducted by the National Advisory Environmental Health Sciences Council.

§ 65a.7 Awards.

Criteria. Within the limits of available funds, the Director may award grants to carry out those programs which:

(a) Are determined by the Director to be meritorious; and

(b) In the judgment of the Director, best promote the purposes of the grant program, as authorized under section 311(a) of the Act and the regulations of this part, and best address program priorities.

§ 65a.8 How long does grant support last?

(a) The notice of grant award specifies how long NIEHS intends to support the project without requiring the grantee to recompete for funds. This period, called the project period, may be for 1–5 years.

(b) Generally, the grant will initially be for one year, and subsequent continuation awards will also be for one year at a time. A grantee must submit a separate application at the time and in the form and manner as the Secretary may require to have the support continued for each subsequent year. Decisions regarding continuation awards and the funding level of these awards will be made after consideration of such factors as the grantee's progress and management practices, and the availability of funds. In all cases, continuation awards require a determination by the Director that continued funding is in the best interest of the Federal Government.

(c) Neither the approval of any application nor the award of any grant commits or obligates the Federal Government in any way to make any additional, supplemental, continuation or other award with respect to any approved application or portion of an approved application.

(d) Any balance of federally obligated grant funds remaining unobligated by the grantee at the end of a budget period may be carried forward to the next budget period, for use as prescribed by the Director, provided a continuation award is made. If at any time during a budget period it becomes apparent to the Director that the amount of Federal funds awarded and available to the grantee for that period, including any unobligated balance carried forward from prior periods, exceeds the grantee's needs for that period, the Director may adjust the amounts awarded by withdrawing the excess.

§ 65a.9 What are the terms and conditions of awards?

In addition to being subject to other applicable regulations (see § 65a.11), grants awarded under this part are subject to the following terms and conditions:

(a) *Material changes*. Except as otherwise provided by 45 CFR 74.25, the grantee may not materially change the quality, nature, scope, or duration of the program unless the written approval of the Director is obtained prior to the change.

(b) *Additional conditions*. The Director may impose additional conditions prior to the award of any grant under this part if it is determined by the Director that the conditions are necessary to carry out the purpose of the grant or assure or protect advancement of the approved program, the interests of the public health, or the conservation of grant funds.

§ 65a.10 For what purposes may grant funds be spent?

A grantee shall spend funds it receives under this part solely in accordance with the approved application and budget, the regulations of this part, the terms and conditions of the award, and the applicable cost principles prescribed in 45 CFR 74.27.

§ 65a.11 Other HHS regulations and policies that apply.

Several other HHS regulations and policies apply to awards under this part. These include but are not necessarily limited to:

42 CFR part 50, subpart A—Responsibility of PHS awardee and applicant institutions for dealing with and reporting possible misconduct in science

42 CFR part 50, subpart D—Public Health Service grant appeals procedure

42 CFR part 50, subpart F—Responsibility of applicants for promoting objectivity in research for which PHS funding is sought

42 CFR part 52h—Scientific peer review of research grant applications and research and development contract projects

45 CFR part 16—Procedures of the Departmental Grant Appeals Board

45 CFR part 46—Protection of human subjects

45 CFR part 74—Uniform administrative requirements for awards and subawards to institutions of higher education, hospitals, other nonprofit organizations, and commercial organizations; and certain grants and agreements with states, local governments and Indian tribal governments

45 CFR part 75—Informal grant appeals procedures

45 CFR part 76—Governmentwide debarment and suspension (nonprocurement) and governmentwide requirements for drug-free workplace (grants)

45 CFR part 80—Nondiscrimination under programs receiving Federal assistance through the Department of Health and Human Services effectuation of title VI of the Civil Rights Act of 1964

45 CFR part 81—Practice and procedure for hearings under part 80 of this title

45 CFR part 84—Nondiscrimination on the basis of handicap in programs and activities receiving Federal financial assistance

45 CFR part 86—Nondiscrimination on the basis of sex in education programs and activities receiving or benefiting from Federal financial assistance

45 CFR part 91—Nondiscrimination on the basis of age in HHS programs or activities receiving Federal financial assistance

45 CFR part 92—Uniform administrative requirements for grants and cooperative agreements to state and local governments

45 CFR part 93—New restrictions on lobbying

59 FR 14508 (March 28, 1994)—NIH Guidelines on the Inclusion of Women and Minorities as Subjects in Clinical Research

[NOTE: This policy is subject to change, and interested persons should contact the Office of Research on Women's Health, NIH, Room 201, Building 1, MSC 0161, Bethesda, MD 20892–0161 (301–402–1770; not a toll-free number) to obtain references to the current version and any amendments.]

59 FR 34496 (July 5, 1994)—NIH Guidelines for Research Involving Recombinant DNA Molecules.

NOTE: This policy is subject to change, and interested persons should contact the Office of Recombinant DNA Activities, NIH, Suite 323, 6000 Executive Boulevard, MSC 7010, Bethesda, MD 20892–7010 (301–496–9838; not a toll-free number) to obtain references to the current version and any amendments.]

"PHS Grants Policy Statement," DHHS Publication No. (OASH) 94–50,000 (Revised April 1, 1994), as amended by Addendum, dated January 24, 1995.

NOTE: This policy is subject to change, and interested persons should contact the Extramural Outreach and Information Resources Office (EOIRO), Office of Extramural Research, 6701 Rockledge Drive, Room 6208, MSC 7910, Bethesda, MD 20892–7910 (301–435–0714; not a toll-free number) to obtain references to the current version and any amendments. Information may also be obtained by contacting the EOIRO via its e-mail address (*asknih@odrockm1.od.nih.gov*) and by browsing the NIH Home Page site on the World Wide Web (*http://www.nih.gov*).]

"Public Health service Policy on Humane Care and Use of Laboratory animals," Office for Protection from Research Risks, HIH (Revised September 1986).

NOTE: This policy is subject to change, and interested persons should contact the Office for Protection for Research Risks, NIH, Suite 3B01, 6100 Executive Boulevard, MSC 7507, Rockville, MD 20852–7507 (301–496–7005; not a toll-free number) to obtain references to the current version and any amendments.]

PART 66—NATIONAL RESEARCH SERVICE AWARDS

Subpart A—Direct Awards

Sec.

66.101 Applicability.
66.102 Definitions.
66.103 Eligibility.
66.104 Application.

66.105 Requirements.
66.106 Awards.
66.107 Payments to awardees.
66.108 Payments to institutions.
66.109 Termination.
66.110 Service, payback, and recovery requirements.
66.111 Suspension, waiver, and cancellation.
66.112 Other HHS regulations and policies that apply.
66.113 Publications.
66.114 Copyright.
66.115 Additional conditions.

Subpart B—Institutional Grants

66.201 Applicability.
66.202 Definitions.
66.203 Eligibility.
66.204 Application.
66.205 Requirements.
66.206 Grant awards.
66.207 Other HHS regulations and policies that apply.
66.208 Additional conditions.

AUTHORITY: 42 U.S.C. 216, 288.

SOURCE: 48 FR 24880, June 3, 1983, unless otherwise noted.

Subpart A—Direct Awards

§ 66.101 Applicability.

The regulations in this subpart apply to National Research Service Awards made by the Secretary to individuals for research and training to undertake research, under section 487 of the Public Health Service Act, as amended (42 U.S.C. 288).

[66 FR 29499, May 31, 2001]

§ 66.102 Definitions.

As used in this subpart:

(a) *Act* means the Public Health Service Act, as amended.

(b) *Secretary* means the Secretary of Health and Human Services and any other officer or employee of the Department of Health and Human Services to whom the authority involved has been delegated.

(c) *Nonprofit* institution means a corporation or association in which no part of the net earnings inures or may lawfully inure to the benefit of any private shareholder or individual.

(d) *Award* means a National Research Service Award under section 487 of the Act (42 U.S.C. 288).

(e) *Residency* means post-graduate training for doctors of medicine, osteopathy, dentistry, optometry, and podiatry, nurses, and other individuals providing health care directly to patients, in which the majority of the time is spent in non-research clinical training.

(f) *Noncitizen national of the United States* means a person who, though not a citizen of the United States, owes permanent allegiance to the United States [8 U.S.C. 1101(a) (22)].

(g) *Predoctoral training* means training at the post-baccalaureate level in a program leading to the award of a doctor of philosophy of science, or equivalent degree. For purposes of Awards under the Minority Access to Research Careers programs of the National Institute of General Medical Sciences and the Career Opportunities in Research Education and Training programs of the National Institute of Mental Health, *predoctoral training* also means training in a program leading to the award of a baccalaureate in science or equivalent degree.

(h) *Postdoctoral training* means training of individuals holding a doctor of philosophy, science, medicine, dentistry, osteopathy, optometry, podiatry, veterinary medicine, engineering, nursing sciences, public health, or equivalent degree.

[48 FR 24880, June 3, 1983, as amended at 66 FR 29499, May 31, 2001]

§ 66.103 Eligibility.

To be eligible for a National Research Service Award an individual must:

(a) Be a citizen, noncitizen national of the United States, or lawfully admitted to the United States for permanent residence at the time of the award.

(b) Propose to engage in such research, or training to undertake research, in a program specified in section 487(a)(1)(A) of the Act; and

(c) Propose to engage in such research or training to undertake research on a full-time basis except in cases of disability or pressing family need.

[48 FR 24880, June 3, 1983, as amended at 66 FR 29500, May 31, 2001]

§ 66.104 Application.

(a) Eligible individuals may apply for an Award using the form and by the dates the Secretary prescribes.

(b) In addition to any other pertinent information that the Secretary may require, each application shall detail:

(1) The applicant's educational background and other qualifications and experience, including previous academic and professional degrees;

(2) The subject area of the proposed research or training;

(3) The proposed period of Award:

(4) If the proposed period of Award would provide the individual with aggregate support in excess of five years at the predoctoral level or three years at the postdoctoral level, the justification for this request; and

(5) The availability of necessary resources and facilities at the institution where the research or training would be conducted.

(Approved by the Office of Management and Budget under control number 0925–0002)

[48 FR 24880, June 3, 1983, as amended at 66 FR 29500, May 31, 2001]

§ 66.105 Requirements.

The Secretary shall make an Award to an individual under this subpart only if:

(a) For any Award made for an individual's initial twelve months of NRSA postdoctoral research or training, the individual has assured the Secretary, in the form and manner the Secretary may prescribe, that he or she will satisfy the requirements of § 66.110.

(b) If the proposed research or training would take place at an institution other than the National Institutes of Health, the institution has assured the Secretary, in the form and manner the Secretary may prescribe, that:

(1) The applicant has been accepted to the institution for the purpose of engaging in the research or training for which an Award is being sought;

(2) The Award will not be used to support a residency; and

(3) In the event an Award is made the institution will make available to the applicant any resources and facilities described in the application as necessary to carry out the research or training; and

(c) The individual has assured the Secretary, in the form and manner the Secretary may prescribe, that the Award to the individual will not be used to support a residency.

(Approved by the Office of Management and Budget under control number 0925–0002)

[48 FR 24880, June 3, 1983, as amended at 66 FR 29500, May 31, 2001]

§ 66.106 Awards.

(a) Within the limits of funds available, the Secretary shall make Awards to those applicants:

(1) Who have satisfied the requirements of § 66.105; and

(2) Whose proposed research or training would, in the judgment of the Secretary, best promote the purposes of section 487(a)(1)(A) of the Act, taking into consideration among other pertinent factors:

(i) The scientific, technical, or educational merit of the particular proposal;

(ii) The availability of resources and facilities to carry it out;

(iii) The qualifications and experience of the applicant; and

(iv) The need for personnel in the subject area of the proposed research or training.

(b) In making Awards, the Secretary shall take account of the Nation's overall need for biomedical research by giving special consideration to physicians who agree to undertake a minimum of two years of biomedical research.

(c) All Awards shall be in writing. Each shall specify:

(1) The period of the Award;

(2) The total recommended stipends and allowances provided for the entire Award period;

(3) The amount awarded for the intitial year of that period (see § 66.107); and

(4) The amount of the payments to the institution for the cost of services provided the awardee by the institution during the initial year of that period (see § 66.108).

(d) Neither the approval of any application nor any Award shall commit or obligate the United States in any way to make additional, supplemental, continuation, or other Award with respect

to any approved application or portion thereof.

(e) No individual may receive an aggregate of more than five years of support at the predoctoral level and three years at the postdoctoral level unless the Secretary waives, for good cause shown, this limitation for the individual. In determining what constitutes ''good cause,'' the Secretary shall take into account such factors as whether the applicant proposes to pursue a combined program leading to the degrees of doctor of medicine and doctor of philosophy.

[48 FR 24880, June 3, 1983, as amended at 66 FR 29500, May 31, 2001]

§ 66.107 Payments to awardees.

(a) Individuals receiving Awards shall be entitled to the stipends, tuition, fees, and allowances the Secretary may designate, taking into account the cost of living, and such other factors as the needs of the program and the availability of funds.

(b) The Secretary shall pay stipends, tuition, fees and allowances to the awardee or the sponsoring institution for payment to the awardee.

§ 66.108 Payments to institutions.

The institution shall be entitled to an allowance to help defray the cost of support services (including the cost of faculty salaries, supplies, equipment, general research support, and related items) provided to the individual by the institution. The Secretary shall determine the amount of payments based upon reasonable costs to the institution of establishing and maintaining the quality of research and training programs for which it receives support under this subpart. The Secretary may make payments to the institution either in advance or by way of reimbursement.

§ 66.109 Termination.

(a) The Secretary may terminate an Award prior to its normal expiration date:

(1) At the written request of the awardee; or

(2) If the Secretary finds that the awardee has materially failed to comply with the terms and conditions of the Award or to carry out the purpose for which it was made.

(b) In the event an Award is terminated, the Secretary shall notify the awardee in writing of this determination, the reasons for termination, the effective date, and any procedural rights available.

§ 66.110 Service, payback, and recovery requirements.

(a) Each individual who receives an Award for postdoctoral research or training shall engage in a month of research training, research, or teaching that is health-related (or any combination thereof) for each month of support received, up to a maximum of twelve months. Such period shall be served in accordance with the usual patterns of such employment or training.

(b) In any case in which an individual receives an Award for more than twelve months, the thirteenth month and each subsequent month of performing activities under the Award shall be considered to be activities toward satisfaction of the requirement established in paragraph (a) of this section.

(c) Except as provided in § 66.111, an individual subject to the requirements for service in paragraph (a) of this section must begin to undertake the service on a continuous basis within two years after the expiration or termination for his or her Award.

(d) If the individual fails to undertake or perform the service in accordance with the requirements of this section, the United States shall be entitled to recover from the individual an amount determined in accordance with the formula:

$$A = 0\frac{(t-s)}{(t)}$$

In which

A is the amount the United States is entitled to recover;

0 is the sum of the total amount paid to the individual for the months of postdoctoral support up to a maximum of twelve months;

t is total number of months in the individual's service obligation;

and *s* is the number of months of the obligation served by him or her in accordance with paragraph (a) or (b) of this section.

(e) Except as provided in § 66.111, the individual shall pay to the United States any amount which it is entitled to recover under paragraph (d) of this section within a three-year period beginning on the date the United States becomes entitled to recovery that amount. Interest shall accrue to the United States until any amount due it under paragraph (d) of the section is paid. The rate of interest will be fixed by the Secretary of the Treasury after taking into consideration private consumer rates of interest prevailing on the date the United States becomes entitled to recovery.

[66 FR 29500, May 31, 2001]

§ 66.111 Suspension, waiver, and cancellation.

(a) The Secretary may extend the period for undertaking service described in § 66.110(c), permit breaks in the continuous service required under § 66.110(c), or extend the period of repayment under § 66.110(e) if the Secretary determines that:

(1) An extension or break in service is necessary so the individual may complete his or her research training;

(2) Completion during the period would be impossible because the individual is temporarily disabled; or

(3) Completion during the period would involve a substantial hardship to the individual and failure to extend to the period would be against equity and good conscience.

(b) The Secretary may waive, in whole or in part, the obligation of the individual to repay pursuant to § 66.110(d) if the Secretary determines that:

(1) Fulfillment would be impossible because the individual is permanently and totally disabled; or

(2) Fulfillment would involve a substantial hardship to the individual and enforcement of the obligation would be against equity and good conscience.

(c) In making determinations under § 66.111 (a)(3) and (b)(2), the Secretary will take into consideration such factors as:

(1) The individual's present financial resources and obligations;

(2) The individual's estimated future financial resources and obligations;

(3) The reasons for the individual's failure to complete the requirements within the prescribed period, such as problems of a personal nature;

(4) The extent to which the individual has been engaged in activities encompassed by § 66.110(a) and (b);

(5) Whether the individual has received sufficient training to be qualified to perform any such activities;

(6) The unavailability of employment opportunities appropriate to the individual's education and training; and

(7) Any other extenuating circumstances.

(d) Any obligations of any individual under this subpart will be cancelled upon the death of that individual.

[48 FR 24880, June 3, 1983; 48 FR 33710, July 25, 1983, as amended at 66 FR 29500, May 31, 2001]

§ 66.112 Other HHS regulations and policies that apply.

Several other regulations and policies may apply to individuals and institutions receiving payments under this subpart. These include, but are not limited to:

45 CFR part 46—Protection of human subjects

45 CFR part 76—Governmentwide debarment and suspension (nonprocurement) and governmentwide requirements for drug-free workplace (grants)

45 CFR part 80—Nondiscrimination under programs receiving Federal assistance through the Department of Health and Human Services effectuation of title VI of the Civil Rights Act of 1964

45 CFR part 81—Practice and procedure for hearings under part 80 of this Title

45 CFR part 84—Nondiscrimination on the basis of handicap in programs and activities receiving or benefiting from Federal financial assistance

45 CFR part 86—Nondiscrimination on the basis of sex in education programs and activities receiving or benefiting from Federal financial assistance

45 CFR part 91—Nondiscrimination on the basis of age in HHS programs or activities receiving Federal financial assistance

51 FR 16958 (May 7, 1986)—NIH Guidelines for Research Involving Recombinant DNA Molecules.

NOTE: This policy is subject to change, and interested persons should contact the Office of Science Policy, Office of Biotechnology Activities, NIH, Suite 302, 6000 Executive Boulevard, MSC 7052, Bethesda, MD 20892–7052, (301) 496–9838 (not a toll-free number) to

obtain references to the current version and any amendments.

[49 FR 38116, Sept. 27, 1984, as amended at 66 FR 29500, May 31, 2001]

§ 66.113 Publications.

Publication, distribution, and disposition of all manuscripts and other materials resulting from an Award shall be subject to the conditions that all such materials shall bear appropriate acknowledgement of Department of Health and Human Services support and that the awardee shall furnish copies of these manuscripts or other materials as the Secretary may reasonably request.

§ 66.114 Copyright.

Where the work accomplished under an Award results in a book or other copyrightable material, the author is free to copyright the work, but the United States reserves a royalty-free, nonexclusive, and irrevocable license to reproduce, publish, or otherwise use, and to authorize others to use, all copyrightable or copyrighted material resulting from the Award.

§ 66.115 Additional conditions.

The Secretary may with respect to any Award or class of Awards impose additional conditions prior to or at the time of any Award when in the Secretary's judgment such conditions are necessary to assure the carrying out of the purposes of the Award, the interests of the public health, or the conservation of funds awarded.

Subpart B—Institutional Grants

§ 66.201 Applicability.

The regulations in this subpart apply to grants under section 487 of the Public Health Service Act, as amended (42 U.S.C. 288), to public institutions and to nonprofit private institutions to enable those institutions to make National Research Service Awards to individuals for research and training to undertake research, in programs specified in section 487 of the Act.

[66 FR 29500, May 31, 2001]

§ 66.202 Definitions.

The definitions in § 66.102 of subpart A of this part apply to this subpart.

[48 FR 24880, June 3, 1983; 48 FR 33710, July 25, 1983]

§ 66.203 Eligibility.

To be eligible for a grant under this subpart, an applicant must be:

(a) A public or nonprofit private institution; and

(b) Located in a State, the District of Columbia, Puerto Rico, the Virgin Islands, the Canal Zone, Guam, American Samoa, or the Trust Territory of the Pacific Islands.

§ 66.204 Application.

(a) Application for a grant under this subpart shall be made on a form approved for that purpose by the Secretary. Applicants shall submit completed forms on or before the dates the Secretary may prescribe.

(b) In addition to any other pertinent information that the Secretary may require, each application shall set forth in detail:

(1) The subject area or areas in which the proposed research or training will be conducted;

(2) The resources and facilities available for use by recipients of Awards in carrying out this research or training;

(3) The names, qualifications, and experience of the program director and principal staff members who will be responsible for the proposed program;

(4) The criteria to be employed in selecting recipients of Awards;

(5) The estimated number of recipients of Awards under the grant;

(6) The proposed project period and a detailed budget and justification for the amount of grant funds requested; and

(7) Proposed methods for monitoring and evaluating the performance of individual recipients of Awards, as well as the overall program.

(Approved by the Office of Management and Budget under control number 0925–0022)

§ 66.205 Requirements.

(a) No Award shall be made to an individual from a grant under this subpart unless:

(1) For any award made for an individual's initial twelve months of NRSA postdoctoral research training, the individual has assured the Secretary, in the form and manner the Secretary may prescribe, that he or she will satisfy the requirements of § 66.110 of subpart A of this part;

(2) The individual is a citizen or noncitizen national of the United States or has been lawfully admitted to the United States for permanent residence at the time of the award;

(3) The Award includes a provision for termination in the event the recipient is found by the institution to have materially failed to comply with the terms and conditions of the Award or to carry out the purpose for which it was made; and

(4) The Award is not to be used to support a residency.

(b) No Award shall be made to an individual under such grant which would provide that individual with aggregate support in excess of five years for predoctoral training and three years for postdoctoral training, unless the Secretary for good cause shown as provided in § 66.106(e) of subpart A of this part, waives the application of the limitation with respect to that individual;

(c) The provisions of §§ 66.110 and 66.111 of subpart A of this part constitute terms and conditions of any Award made from a grant under this subpart.

(Approved by the Office of Management and Budget under control number 0925–0022)

[48 FR 24880, June 3, 1983; 48 FR 33710, July 25, 1983, as amended at 66 FR 29501, May 31, 2001]

§ 66.206 Grant awards.

(a) Within the limits of funds available, the Secretary shall award grants to those applicants:

(1) Whose applications have been reviewed and recommended for approval by the appropriate national advisory council or board;

(2) Who have satisfied the requirements of § 66.105; and

(3) Whose proposed programs would, in the judgment of the Secretary, best promote the purposes of section 487(a)(1)(B) of the Act, taking into consideration among other pertinent factors:

(i) The scientific, technical, or educational merit of the proposed program;

(ii) The adequacy of the resources and facilities available to the applicant;

(iii) The qualifications and experience of the program director and principal staff members;

(iv) The degree of the need for personnel in the subject area or areas of the proposed research or training;

(v) The extent to which the applicant, in making Awards, gives special consideration to physicians who agree to undertake a minimum of two years of biomedical research;

(vi) The administrative and management capability of the applicant;

(vii) The reasonableness of the proposed budget in relation to the proposed program; and

(viii) The adequacy of the methods for monitoring and evaluating the performance of individual recipients and the overall program.

(b) The notice of grant award specifies how long HHS intends to support the project without requiring the project to recompete for funds. This period, called the project period, will usually be for 3–5 years.

(c) Generally the grant will initially be for one year and subsequent continuation awards will also be for one year at a time. A grantee must submit a separate application to have the support continued for each subsequent year. Decisions regarding continuation awards and the funding level of such awards will be made after consideration of such factors as the grantee's progress and management practices, and the availability of funds. In all cases, continuation awards require a determination by HHS that continued funding is in the best interest of the government.

(d) Neither the approval of any application nor the award of any grant commits or obligates the United States in any way to make any additional, supplemental, continuation, or other award with respect to any approved application or portion of any approved application.

[48 FR 24880, June 3, 1983, as amended at 66 FR 29501, May 31, 2001]

§ 66.207 Other HHS regulations and policies that apply.

Several other regulations and policies apply to grants under this subpart. These include, but are not limited to:

42 CFR part 50, subpart D—Public Health Service grant appeals procedure

42 CFR part 50, subpart F—Responsibility of applicants for promoting objectivity in research for which PHS funding is sought.

45 CFR part 16—Procedures of the Departmental Grant Appeals Board

45 CFR part 46—Protection of human subjects

45 CFR part 74—Uniform administrative requirements for awards and subawards to institutions of higher education, hospitals, other nonprofit organizations, and commercial organizations; and certain grants and agreements with states, local governments and Indian tribal governments.

45 CFR part 75—Informal grant appeals procedures

45 CFR part 76—Governmentwide debarment and suspension (non procurement) and governmentwide requirements for drug-free workplace (grants)

45 CFR part 80—Nondiscrimination under programs receiving Federal assistance through the Department of Health and Human Services effectuation of title VI of the Civil Rights Act of 1964

45 CFR part 81—Practice and procedure for hearings under part 80 of this title

45 CFR part 84—Nondiscrimination on the basis of handicap in programs and activities receiving or benefiting from Federal financial assistance

45 CFR part 86—Nondiscrimination on the basis of sex in education programs and activities receiving or benefiting from Federal financial assistance

45 CFR part 91—Nondiscrimination on the basis of age in HHS programs or activities receiving Federal financial assistance

48 FR 24556—Guidelines for Research Involving Recombinant DNA Molecules published by the National Institutes of Health

51 FR 16958 (May 7, 1986)—NIH Guidelines for Research Involving Recombinant DNA Molecules.

NOTE: This policy is subject to change, and interested persons should contact the Office of Biotechnology Activities, NIH, Suite 302, 6000 Executive Boulevard, MSC 7052, Bethesda, MD 20892–7052, (301) 496–9838 (not a toll-free number) to obtain references to the current version and any amendments.

[49 FR 38116, Sept. 27, 1984, as amended at 66 FR 29501, May 31, 2001]

EDITORIAL NOTE: At 66 FR 20752, May 31, 2001, in § 66.207, the entry for 48 FR 24556 was revised. However, no new entry was set forth.

§ 66.208 Additional conditions.

The Secretary may, with respect to any grant award, impose additional conditions prior to or at the time of any award when in the Secretary's judgment those conditions are necessary to assure or protect advancement of the approved program, the interests of the public health, or the conservation of grant funds.

PART 67—AGENCY FOR HEALTH CARE POLICY AND RESEARCH GRANTS AND CONTRACTS

Subpart A—Research Grants for Health Services Research, Evaluation, Demonstration, and Dissemination Projects

Sec.
67.10 Purpose and scope.
67.11 Definitions.
67.12 Eligible applicants.
67.13 Eligible projects.
67.14 Application.
67.15 Peer review of applications.
67.16 Evaluation and disposition of applications.
67.17 Grant award.
67.18 Use of project funds.
67.19 Other applicable regulations.
67.20 Confidentiality.
67.21 Control of data and availability of publications.
67.22 Additional conditions.

Subpart B—Peer Review of Contracts for Health Services Research, Evaluation, Demonstration, and Dissemination Projects

67.101 Purpose and scope.
67.102 Definitions.
67.103 Peer review of contract proposals.
67.104 Confidentiality.
67.105 Control of data and availability of publications.

AUTHORITY: Pub. L. 103–43, 107 Stat. 214–215, Pub. L. 102–410, 106 Stat. 2094–2101 and sec. 6103, Pub. L. 101–239, 103 Stat. 2189–2208, Title IX of the Public Health Service Act (42 U.S.C. 299–299c–6); and sec. 1142, Social Security Act (42 U.S.C. 1320b–12).

SOURCE: 62 FR 12908, Mar. 18, 1997, unless otherwise noted.

Subpart A—Research Grants for Health Services Research, Evaluation, Demonstration, and Dissemination Projects

§67.10 Purpose and scope.

The regulations of this subpart apply to the award by AHCPR of grants and cooperative agreements under:

(a) Title IX of the Public Health Service Act to support research, evaluation, demonstration, and dissemination projects, including conferences, on health care services and systems for the delivery of such services, as well as to establish and operate multidisciplinary health services research centers.

(b) Section 1142 of the Social Security Act to support research on the outcomes, effectiveness, and appropriateness of health care services and procedures, including but not limited to, evaluations of alternative services and procedures; projects to improve methods and data bases for outcomes, effectiveness, and other research; dissemination of research information and clinical guidelines, conferences, and research on dissemination methods.

§67.11 Definitions.

As used in this subpart—

Administrator means the Administrator and any other officer or employee of the Agency for Health Care Policy and Research to whom the authority involved may be delegated.

Agency for Health Care Policy and Research (AHCPR) means that unit of the Department of Health and Human Services established by section 901 of the Public Health Service Act.

Direct costs means the costs that can be identified specifically with a particular cost objective, such as compensation of employees for the time and effort devoted specifically to the approved project, and the costs of materials acquired, consumed, or expended specifically for the purpose of the approved project.

Grant means an award of financial assistance as defined in 45 CFR parts 74 and 92, including cooperative agreements.

Grantee means the organizational entity or individual to which a grant, including a cooperative agreement, under Title IX of the Public Health Service Act or section 1142 of the Social Security Act and this subpart is awarded and which is responsible and accountable both for the use of the funds provided and for the performance of the grant-supported project or activities. The grantee is the entire legal entity even if only a particular component is designated in the award document.

Nonprofit as applied to a private entity, means that no part of the net earnings of such entity inures or may lawfully inure to the benefit of any shareholder or individual.

Peer review group means a panel of experts, established under section 922(c) of the PHS Act, who by virtue of their training or experience are eminently qualified to carry out the duties of such peer review group as set out in this subpart. Officers and employees of the United States may not constitute more than 25 percent of the membership of any such group under this subpart.

PHS Act means the Public Health Service Act, as amended.

Principal investigator means a single individual, designated in the grant application and approved by the Administrator, who is responsible for the scientific and technical direction of the project.

Social Security Act means the Social Security Act, as amended.

§67.12 Eligible applicants.

Any public or nonprofit private entity or any individual is eligible to apply for a grant under this subpart.

§67.13 Eligible projects.

Projects for research, evaluations, demonstrations, dissemination of information (including research on dissemination), and conferences, related to health care services and the delivery of such services, are eligible for grant support. These include, but are not limited to, projects in the following categories:

(a) Effectiveness, efficiency, and quality of health care services;

(b) Outcomes of health care services and procedures;

(c) Clinical practice, including primary care and practice-oriented research;

(d) Health care technologies, facilities, and equipment, including assessments of health care technologies and innovative approaches to such assessments, and technology diffusion;

(e) Health care costs and financing, productivity, and market forces;

(f) Health promotion and disease prevention;

(g) Health statistics and epidemiology;

(h) Medical liability;

(i) AID/HIV infection, particularly with respect to issues of access and delivery of health care services;

(j) Rural health services;

(k) The health of low-income, minority, elderly, and other underserved populations, including women and children; and

(l) Information dissemination and research on dissemination methodologies, directed to health care providers, practitioners, consumers, educators, review organizations, and others.

§ 67.14 Application.

(a) To apply for a grant, an entity or individual must submit an application in the form and at the time that the Administrator requires. The application must be signed by an individual authorized to act for the applicant and to assume on behalf of the applicant the obligations imposed by the PHS Act and the Social Security Act, as pertinent, the regulations of this subpart, and any additional terms or conditions of any grant awarded.

(b) In addition to information requested on the application form, the applicant must provide such other information as the Administrator may request.

§ 67.15 Peer review of applications.

(a) *General procedures for peer review.* (1) All applications for support under this subpart will be submitted by the Administrator for review to a peer review group, in accordance with section 922(a) of the PHS Act, except that applications eligible for review under section 922(d)(2) of the PHS Act (''small grants'') may be reviewed under adjusted procedures in accordance with paragraph (b) of this section.

(2) Members of the peer review group will be selected based upon their training and experience in relevant scientific and technical fields, taking into account, among other factors:

(i) The level of formal education (e.g., M.A., Ph.D., M.D., D.N.Sc.) completed by the individual and/or the individual's pertinent experience and expertise;

(ii) The extent to which the individual has engaged in relevant research, the capacities (e.g., principal investigator, assistant) in which the individual has done so, and the quality of such research;

(iii) The extent of the professional recognition received by the individual as reflected by awards and other honors received from scientific and professional organizations outside the Department of Health and Human Services;

(iv) The need of the peer review group to include within its membership experts representing various areas of specialization within relevant scientific and technical fields, or specific health care issues; and

(v) Appropriate representation based on gender, racial/ethnic origin, and geography.

(3) Review by the peer review group under paragraph (a) of this section is conducted by using the criteria set out in paragraph (c) of this section.

(4) The peer review group to which an application has been submitted under paragraph (a) of this section shall make a written report to the Administrator on each application, which shall contain the following parts:

(i) The first part of the report shall consist of a factual summary of the proposed project, including a description of its purpose, scientific approach, location, and total budget.

(ii) The second part of the report shall address the scientific and technical merit of the proposed project with a critique of the proposed project with regard to the factors described in paragraphs (c)(1)(i) through (c)(1)(x) or (c)(2)(i) through (c)(2)(vii) of this section as applicable. This portion of the report shall include a set of recommendations to the Administrator

with respect to the disposition of the application based upon its scientific and technical merit. The peer review panel may recommend to the Administrator that an application:

(A) Be given consideration for funding,

(B) Be deferred for a later decision, pending receipt of additional information, or

(C) Not be given further consideration.

(iii) For each application recommended for further consideration by the Administrator, the report shall also provide a priority score based on the scientific and technical merit of the proposed project, and make recommendations on the appropriate project period and level of support. The report may also address, as applicable, the degree to which the proposed project relates to AHCPR-announced priorities.

(b) *Procedural adjustments for small grants.* (1) The Administrator may make adjustments in the peer review procedures established in accordance with paragraph (a) of this section for grant applications with total direct costs that do not exceed the amount specified in section 922(d)(2) of the PHS Act, hereafter referred to as ''small grants.''

(2) Non-Federal and Federal experts will be selected by the Administrator for the review of small grant applications on the basis of their training and experience in particular scientific and technical fields, their knowledge of health services research and the application of research findings, and their special knowledge of the issue(s) being addressed or methods and technology being used in the specific proposal.

(3) Review of applications for small grants may be by a review group established in accordance with paragraph (a) of this section, or by individual field readers, or by an ad hoc group of reviewers.

(4) The review criteria set forth in paragraph (c) of this section shall be used for the review of small grant applications.

(5) Each reviewer or group of reviewers to whom an application has been submitted under paragraph (b) of this section shall make a written report to the Administrator on each application. Each report shall summarize the findings of the review and provide a recommendation to the Administrator on whether the application should be given further consideration. For applications recommended for further consideration, the report may also address, as applicable, the degree to which the proposed project relates to AHCPR-announced priorities.

(c) *Review criteria.* The review criteria set out in this paragraph apply to both applications reviewed by peer review panels in accordance with paragraph (a) of this section, and applications for small grants reviewed in accordance with paragraph (b) of this section.

(1) *General review criteria.* In carrying out a review under this section for grants (other than conference grants), the following review criteria will be taken into account, where appropriate:

(i) The significance and originality from a scientific or technical standpoint of the goals of the project;

(ii) The adequacy of the methodology proposed to carry out the project;

(iii) The availability of data or the adequacy of the proposed plan to collect data required in the analyses;

(iv) The adequacy and appropriateness of the plan for organizing and carrying out the project;

(v) The qualifications and experience of the principal investigator and proposed staff;

(vi) The reasonableness of the budget and the time frame for the project, in relation to the work proposed;

(vii) The adequacy of the facilities and resources available to the grantee;

(viii) The extent to which women and minorities are adequately represented in study populations;

(ix) Where an application involves activities which could have an adverse effect upon humans, animals, or the environment, the adequacy of the proposed means for protecting against or minimizing such effects; and

(x) Any additional criteria that may be announced by the Administrator from time to time for specific categories of grant applications (e.g., proposed projects for support of research centers) eligible for support under this subpart.

(xi) In addition to the scientific and technical criteria above, peer reviewers may be asked to consider the degree to which a proposed project addresses any special AHCPR priorities that have been announced by the Administrator, as applicable.

(2) *Review criteria for conference grants.* In carrying out reviews of conference grants under paragraphs (a) and (b) of this section, the following review criteria will be taken into account, as appropriate:

(i) The significance of the proposed conference, specifically the importance of the issue or problem being addressed, including methodological or technical issues for dealing with the development, conduct, or use of health services research;

(ii) The qualifications of the staff involved in planning and managing the conference;

(iii) The adequacy of the facilities and other resources available for the conference;

(iv) the appropriateness of the proposed budget, including other sources of funding;

(v) The extent to which the health concerns of women and minorities will be addressed in the conference topic(s), as appropriate;

(vi) The plan for evaluating and disseminating the results of the conference; and

(vii) Any additional criteria that may be announced by the Administrator.

(viii) In addition to the scientific and technical criteria above, peer reviewers may be asked to consider the degree to which a proposed project addresses any special AHCPR priorities that have been announced by the Administrator, as appropriate.

(d) *Conflict of interest.* (1) Members of peer review groups will be screened for potential conflicts of interest prior to appointment and will be required to follow Department policies and procedures consistent with the Standards of Ethical Conduct for Employees of the Executive Branch (5 CFR part 2635), Executive Order 12674 (as modified by Executive Order 12731).

(2) In addition to any restrictions referenced under paragraph (d)(1) of this section:

(i) No member of a peer review group (or individual reviewer) may participate in or be present during any review by such group of a grant application in which, to the member's knowledge, any of the following has a financial interest:

(A) The member or his or her spouse, minor child, or partner;

(B) Any organization in which the member is serving as an officer, director, trustee, general partner, or employee; or

(C) Any organization with which the member is negotiating or has any arrangement concerning prospective employment or other similar association, and further;

(ii) In the event that any member of a peer review group or his or her spouse, parent, child, or partner is currently or expected to be the principal investigator or member of the staff responsible for carrying out any research or development activities contemplated as part of a grant application, that member of the group, or the group, may be disqualified from the review and the review conducted by another group with the expertise to do so. An ad hoc group selected in accordance with § 67.15(a), or § 67.15(b) as applicable, may also be used for the review. Any individual reviewer to whom the conditions of this paragraph apply would also be disqualified as a reviewer.

(iii) No member of a peer review group or individual may participate in any review under this subpart of a specific grant application for which the member has had or is expected to have any other responsibility or involvement (whether preaward or postaward) as an officer or employee of the United States.

(3) Where permissible under the standards and order(s) cited in paragraph (d)(1) of this section, the Administrator may waive the requirements in paragraph (d)(2) of this section if it is determined that there is no other practical means for securing appropriate expert advice on a particular grant application.

[62 FR 12909, Mar. 18, 1997, as amended at 62 FR 37124, July 10, 1997]

§67.16 Evaluation and disposition of application.

(a) *Evaluation*. After appropriate peer review in accordance with §67.15, the Administrator will evaluate applications recommended for further consideration, taking into account, among other factors:

(1) The degree to which the purposes of Title IX of the PHS Act and section 1142 of the Social Security Act, as applicable, are being addressed;

(2) Recommendations made by reviewers pursuant to §67.15;

(3) Any recommendations made by the National Advisory Council for Health Care Policy, Research, and Evaluation, as applicable;

(4) The appropriateness of the budget;

(5) The extent to which the research proposal and the fiscal plan provide assurance that effective use will be made of grant funds;

(6) The demonstrated business management capability of the applicant;

(7) The demonstrated competence and skill of the staff, especially the senior personnel, in light of the scope of the project;

(8) The probable usefulness of the results of the project for dealing with national health care issues, policies, and programs; and

(9) The degree to which AHCPR-announced priorities or purposes are being addressed.

(b) *Disposition*. On the basis of the evaluation of the application as provided in paragraph (a) of this section, the Administrator shall: give consideration for funding, defer for a later decision, pending receipt of additional information, or give no further consideration for funding, to any application for a grant under this subpart; except that the Administrator may not fund an application which has not been recommended for further consideration as a result of peer review in accordance with §67.15. A recommendation against further consideration shall not preclude reconsideration, if the application is revised, responding to issues and questions raised during the review, and resubmitted for peer review at a later date.

§67.17 Grant award.

(a) Within the limits of available funds, the Administrator may award grants to those applicants whose projects are being considered for funding, which in the judgment of the Administrator, will promote best the purposes of Title IX of the PHS Act and (if applicable) section 1142 of the Social Security Act, AHCPR priorities, and the regulations of this subpart.

(b) The Notice of Grant Award specifies how long the Administrator intends to support the project without requiring the project to recompete for funds. This period, called the project period, will usually be for 3–5 years, except for small grants, which usually are 1 year awards. The project period as specified in the Notice of Grant Award shall begin no later than 9 months following the date of the award, except that the project period must begin in the same fiscal year as that from which funds are being awarded.

(c) Upon request from the grantee, Department grants policy permits an extension of the project period for up to 12 months, without additional funds, when more time is needed to complete the research. The Administrator may approve a request for an additional extension of time based on unusual circumstances with written justification submitted by the grantee, prior to the completion of the project period. In no case will an additional extension of more than 12 months be approved.

(d) Generally, a grant award will be for 1 year, and subsequent continuation awards will be for 1 year at a time. A grantee must submit a separate continuation application to have the support continued for each subsequent year. Decisions regarding continuation awards and the funding level of such awards will be made after consideration of such factors as the grantee's progress and management practices and the availability of funds. In all cases, continuation awards require a determination by the Administrator that continuation is in the best interest of the Federal Government.

(e) Neither the approval of any application nor the award of any grant commits or obligates the Federal Government in any way to make any additional, supplemental, continuation, or other award with respect to any approved application.

(f) *Small grants.* For particular categories of small grants, such as dissertation research support, the Administrator may establish a limit on total direct costs to be awarded. Any categorical limits will be announced in advance of the deadline for receipt of applications for such small grants.

(g) *Supplemental awards.* (1) Except for small grants, supplemental awards that would exceed 20 percent of the AHCPR approved direct costs of the project during the project period, or that request an increase in funds to support a change or a significant expansion of the scope of the project, will be reviewed as competing supplemental grants in accordance with § 67.15(a). A supplemental award for preparation of data in suitable form for transmittal in accordance with § 67.21 shall be excluded from the 20 percent aggregate.

(2) In the case of small grants, as defined in section 922(d)(2) of the PHS Act, the Administrator will not approve a supplemental award during the project period (excluding any supplemental award for preparation of data in suitable form for transmittal in accordance with § 67.21) that will, in the aggregate, exceed 10 percent of the AHCPR approved direct costs of the project.

(h) *Noncompeting continuation awards.* Each project with a project period in excess of 2 years and with direct costs over the project period in excess of the amount specified in section 922(d)(2) may be reviewed during the second budget period and during each subsequent budget period by at least two members of the peer review group that reviewed the initial application, or individuals who participated in that review, to the extent practicable. Recommendations to the Administrator for continuation support will be based upon evaluation of:

(1) The progress of the project in meeting project objectives;

(2) The appropriateness of the management of the project and allocation of resources within the project;

(3) The adequacy and appropriateness of the plan for carrying out the project during the budget period in light of the accomplishments during previous budget periods; and

(4) The reasonableness of the proposed budget for the subsequent budget period.

§ 67.18 Use of project funds.

Grant funds must be spent solely for carrying out the approved project in accordance with Title IX of PHS Act, section 1142 of the Social Security Act (if applicable), the regulations of this subpart, the terms and conditions of the award, and the provisions of 45 CFR part 74, or part 92 for State and local government grantees.

§ 67.19 Other applicable regulations.

Several other regulations apply to grants under this subpart. These include, but are not limited to:

37 CFR part 401—Inventions and patents
42 CFR part 50 subpart A—Responsibility of PHS awardee and applicant institutions for dealing with and reporting possible misconduct in science
42 CFR part 50 subpart D—Public Health Service grant appeals procedure
42 CFR part 50 subpart F—Responsibility of applicants for promoting objectivity in research for which PHS funding is sought
45 CFR part 16—Procedures of the departmental grant appeals board
45 CFR part 46—Protection of human subjects
45 CFR part 74—Administration of grants
45 CFR part 76—Governmentwide debarment and suspension (nonprocurement) and governmentwide requirements for drug-free workplace (grants)
45 CFR part 80—Nondiscrimination under programs receiving Federal assistance through the Department of Health and Human Services effectuation of Title VI of the Civil Rights Act of 1964
45 CFR part 81—Practice and procedure for hearings under Part 80 of this title
45 CFR part 84—Nondiscrimination on the basis of handicap in programs and activities receiving or benefiting from Federal financial assistance
45 CFR part 86—Nondiscrimination on the basis of sex in education programs and activities receiving or benefiting from Federal financial assistance

45 CFR part 91—Nondiscrimination on the basis of age in DHHS programs or activities receiving Federal financial assistance
45 CFR part 92—Uniform administrative requirements for grants and cooperative agreements with State and local governments
45 CFR part 93—New restrictions on lobbying

§ 67.20 Confidentiality.

The confidentiality of identifying information obtained in the course of conducting or supporting grant and cooperative agreement activities under this subpart is protected by section 903(c) of the PHS Act. Specifically:

(a) No information obtained in the course of conducting or supporting grant and cooperative agreement activities under this subpart, if the entity or individual supplying the information or described in it is identifiable, may be used for any purpose other than the purpose for which it was supplied, unless the identifiable entity or individual supplying the information or described in it has consented to such other use, in the recorded form and manner as the Administrator may require; and

(b) No information obtained in the course of grant and cooperative agreement activities conducted or supported under this subpart maybe published or released in other form if the individual who supplied the information or who is described in it is identifiable, unless such individual has consented, in the recorded form and manner as the Administrator may require, to such publication or release.

§ 67.21 Control of data and availability of publications.

Except as otherwise provided in the terms and conditions of the award and subject to the confidentiality requirements of section 903(c) of the PHS Act, section 1142(d) of the Social Security Act, and § 67.20 of this subpart:

(a) All data collected or assembled for the purpose of carrying out health services research, evaluation, demonstration, or dissemination projects supported under this subpart shall be made available to the Administrator, upon request:

(b) All publications, reports, papers, statistics, or other materials developed from work supported, in whole or in part, by an award made under this subpart must be submitted to the Administrator in a timely manner. All such publications must include an acknowledgement that such materials are the results of, or describe, a grant activity supported by AHCPR;

(c) The AHCPR retains a royalty-free, non-exclusive, and irrevocable license to reproduce, publish, use, or disseminate any copyrightable material developed in the course of or under a grant for any purpose consistent with AHCPR's statutory responsibilities, and to authorize others to do so for the accomplishment of AHCPR purposes; and

(d) Except for identifying information protected by section 903(c) of the PHS Act, the Administrator, as appropriate, will make information obtained with AHCPR grant support available, and arrange for dissemination of such information and material on as broad a basis as practicable and in such form as to make them as useful as possible to a variety of audiences, including health care providers, practitioners, consumers, educators, and policymakers.

§ 67.22 Additional conditions.

The Administrator may, with respect to any grant awarded under this subpart, impose additional conditions prior to or at the time of any award when in the Administrator's judgment such conditions are necessary to assure or protect advancement of the approved project, the interest of the public health, or the conservation of grant funds.

Subpart B—Peer Review of Contracts for Health Services Research, Evaluation, Demonstration, and Dissemination Projects

§ 67.101 Purpose and scope.

(a) The regulations of this subpart apply to the peer review of contracts under:

(1) Title IX of the Public Health Service Act to support research, evaluation, demonstration, and dissemination projects, including conferences, on health care services and systems for

the delivery of such services; and development of clinical practice guidelines, quality standards, performance measures, and review criteria.

(2) Section 1142 of the Social Security Act to support research on the outcomes, effectiveness, and appropriateness of health care services and procedures, including, but not limited to, evaluations of alternative services and procedures; projects to improve methods and data bases for outcomes and effectiveness research; dissemination of research information and clinical practice guidelines, as well as quality standards, performance measures, and review criteria; conferences; and research on dissemination methods.

(b) The regulations of this subpart also contain provisions respecting confidentiality of research data, control of data, and availability of information.

§ 67.102 Definitions.

Contract proposal means a written offer to enter into a contract submitted to a contracting officer by an individual or non-Federal organization, and including at a minimum a description of the nature, purpose, duration, cost of project and methods, personnel, and facilities to be utilized in carrying out the requirements of the contract.

Peer review group means a panel of experts, as required by section 922(c) of the PHS Act, established to conduct technical and scientific review of contract proposals and to make recommendations to the Administrator regarding the merits of such proposals.

Request for proposals means a Government solicitation to prospective offerors, under procedures for negotiated contracts, to submit a proposal to fulfill specific agency requirements based on terms and conditions defined in the solicitation. The solicitation contains information sufficient to enable all offerors to prepare competitive proposals, and is as complete as possible with respect to: The nature of work to be performed; descriptions and specifications of items to be delivered; performance schedule; special requirements, clauses or other circumstances affecting the contract; and criteria by which the proposals will be evaluated.

§ 67.103 Peer review of contract proposals.

(a) All contract proposals for AHCPR support will be submitted by the Administrator for review to a peer review group, as required in section 922(a) of the PHS Act. Proposals will be reviewed in accordance with the Federal Acquisition Regulations and the Health and Human Services Acquisition Regulations (48 CFR Ch. I and III) and the requirements of the pertinent Request for Proposal.

(b) *Establishment of peer review groups.* In accordance with section 922(c) of the PHS Act, the Administrator shall establish such peer review groups as may be necessary to review all contract proposals submitted to AHCPR.

(c) *Composition of peer review groups.* The peer review groups shall be composed of individuals, in accordance with section 922(c) of the PHS Act, as amended, who by virtue of their training or experience are eminently qualified to carry out the duties of such a peer review group. Officers and employees of the United States may not constitute more than 25 percent of the membership of any such group. Members of the peer review group will be selected based upon their training or experience in relevant scientific and technical fields, taking into account, among other factors:

(1) The level of formal education (e.g., M.A., Ph.D., M.D., D.N.Sc.) completed by the individual and/or, as appropriate, the individual's pertinent experience and expertise;

(2) The extent to which the individual has engaged in relevant research, the capacities (e.g., principal investigator, assistant) in which the individual has done so, and the quality of such research;

(3) The extent of the professional recognition received by the individual as reflected by awards and other honors received from scientific and professional organizations outside the Department of Health and Human Services;

(4) The need of the peer review group to include in its membership experts representing various areas of specialization in relevant scientific and technical fields, or specific health care issues; and

(5) Appropriate representation based on gender, racial/ethnic origin, and geography, to the extent practicable.

(d) *Term of peer review group members.* Notwithstanding section 922(c)(3) of the PHS Act, members of peer review groups appointed to review contract proposals will be appointed to such groups for a limited period of time, as determined by the Administrator; such as on an annual basis, or until the peer review of the contract proposals is completed, or until the expiration of the contract(s) awarded as a result of the peer review.

(e) *Conflict of interest.* (1) Members of peer review groups will be screened for potential conflicts of interest prior to appointment and will be required to follow Department policies and procedures consistent with the Standards of Ethical Conduct for Employees of the Executive Branch (5 CFR part 2635) and Executive Order 12674 (as modified by Executive Order 12731).

(2) In addition to any restrictions referenced under paragraph (e)(1) of this section:

(i) No member of a peer review group may participate in or be present during any review by such group of a contract proposal in which, to the member's knowledge, any of the following has a financial interest:

(A) The member or his or her spouse, minor child, or partner;

(B) Any organization in which the member is serving as an officer, director, trustee, general partner, or employee; or

(C) Any organization with which the member is negotiating or has any arrangement concerning prospective employment or other similar association, and further;

(ii) In the event any member of a peer review group or his or her spouse, parent, child, or partner is currently or expected to be the project director or member of the staff responsible for carrying out any contract requirements as specified in the contract proposal, that member is disqualified and will be replaced as appropriate.

§ 67.104 Confidentiality.

Identifying information obtained in the course of conducting AHCPR contract activities under this subpart is protected by section 903(c) of the PHS Act. Specifically:

(a) No information obtained in the course of conducting AHCPR contract activities under this subpart, if the entity or individual supplying the information or described in it is identifiable, may be used for any purpose other than the purpose for which it was supplied, unless the identifiable entity or individual supplying the information or described in it has consented to such other use, in the recorded form and manner as the Administrator may require.

(b) No information obtained in the course of conducting AHCPR contract activities under this subpart may be published or released in other form if the individual who supplied the information or who is described in it is identifiable, unless such individual has consented, in the recorded form and manner as the Administrator may require, to such publication or release.

§ 67.105 Control of data and availability of publications.

(a) Data will be collected, maintained, and supplied as provided in each contract subject to the confidentiality requirements of section 903(c) of the PHS Act, section 1142(d) of the Social Security Act, and § 67.104 of this subpart.

(b) All publications, reports, papers, statistics, or other materials developed from work supported in whole or in part by contracts under Title IX of the PHS Act or section 1142 of the Social Security Act, if applicable, must be submitted to the Administrator in accordance with the terms of the contract. All publications must include an acknowledgment that such materials are the results of, or describe, a contractual activity supported by AHCPR.

(c) In accordance with 48 CFR 52.227–14, unless otherwise specified in the contract, AHCPR will retain a license to use, disclose, reproduce, prepare derivative works from, distribute copies to the public, and perform publicly and display publicly any copyrightable materials produced under a contract for any purpose consistent with AHCPR's statutory responsibilities, and to have or permit others to do so for accomplishment of AHCPR purposes.

(d) Except for identifying information protected by section 903(c) of the PHS Act, the Administrator, as appropriate, will make information provided in accordance with paragraphs (a) and (b) of this section available, and arrange for dissemination of such information and materials on as broad a basis as practicable and in such form as to make them as useful as possible to a variety of audiences, including health care providers, practitioners, consumers, educators, and policymakers.

PART 68a—NATIONAL INSTITUTES OF HEALTH (NIH) CLINICAL RESEARCH LOAN REPAYMENT PROGRAM FOR INDIVIDUALS FROM DISADVANTAGED BACKGROUNDS (CR-LRP)

Sec.

68a.1 What is the scope and purpose of the NIH Clinical Research Loan Repayment Program for Individuals from Disadvantaged Backgrounds (CR-LRP)?
68a.2 Definitions.
68a.3 Who is eligible to apply?
68a.4 Who is eligible to participate?
68a.5 Who is ineligible to participate?
68a.6 How do individuals apply to participate in the CR-LRP?
68a.7 How are applicants selected to participate in the CR-LRP?
68a.8 What does the CR-LRP provide to participants?
68a.9 What loans qualify for repayment?
68a.10 What does an individual have to do in return for loan repayments received under the CR-LRP?
68a.11 How does an individual receive loan repayments beyond the initial two-year contract?
68a.12 What will happen if an individual does not comply with the terms and conditions of participation in the CR-LRP?
68a.13 Under what circumstances can the service or payment obligation be canceled, waived, or suspended?
68a.14 When can a CR-LRP payment obligation be discharged in bankruptcy?
68a.15 Additional conditions.
68a.16 What other regulations and statutes apply?

AUTHORITY: 42 U.S.C. 288–5.

SOURCE: 63 FR 58312, Oct. 30, 1998, unless otherwise noted.

§ 68a.1 What is the scope and purpose of the NIH Clinical Research Loan Repayment Program for Individuals from Disadvantaged Backgrounds (CR-LRP)?

This part applies to the award of educational loan payments under the NIH Clinical Research Loan Repayment Program for Individuals from Disadvantaged Backgrounds (CR-LRP) authorized by section 487E of the Public Health Service Act (42 U.S.C. 288–5). The purpose of this program is to recruit and retain appropriately qualified health professionals, who are from disadvantaged backgrounds and have substantial educational debt relative to income, to conduct clinical research as NIH employees.

§ 68a.2 Definitions.

As used in this part:

Act means the Public Health Service Act, as amended (42 U.S.C. 201 *et seq.*).

Applicant means an individual who applies to, and meets the eligibility criteria for the CR-LRP.

Approved clinical research means clinical research approved by the Clinical Research Loan Repayment Committee.

Clinical privileges means the delineation of privileges for patient care granted to qualified health professionals by the NIH Medical Executive Committee or other appropriate credentialing board.

Clinical research means activities which qualify for inclusion as clinical research in the CR-LRP as determined by the Clinical Research Loan Repayment Committee.

Clinical Research Loan Repayment Committee (CR-LRC) means the scientific board assembled to review, rank, and approve or disapprove Clinical Research Loan Repayment Program applications. The CR-LRC is composed of NIH scientific staff and co-chaired by the Associate Director for Clinical Research, NIH, and the Associate Director for Research on Minority Health, NIH. Members are nominated by the Deputy Director, Intramural Research, NIH, and the co-chairs, and appointed by the Director, NIH.

Clinical Research Loan Repayment Program (CR-LRP or Program) means the

NIH Clinical Research Loan Repayment Program for Individuals from Disadvantaged Backgrounds authorized by section 487E of the Act, as amended.

Clinical Research Loan Repayment Program (CR-LRP or Program) contract refers to the agreement, which is signed by an applicant and the Secretary, wherein the applicant from a disadvantaged background agrees to engage in clinical research as an employee of the NIH and the Secretary agrees to repay qualified educational loans for a prescribed period as specified in this part.

Clinical researcher means an NIH employee with clinical privileges who is conducting approved clinical research.

Commercial loans means loans made by banks, credit unions, savings and loan associations, not-for-profit organizations, insurance companies, schools, and other financial or credit institutions which are subject to examination and supervision in their capacity as lending institutions by an agency of the United States or of the State in which the lender has its principal place of business.

Current payment status means that a qualified educational loan is not past due in its payment schedule as determined by the lending institution.

Debt threshold refers to the minimum amount of qualified educational debt an individual must have, on his/her program eligibility date, in order to be eligible for Program benefits and, for purposes of eligibility under this part, debt threshold means that the qualified educational debt must equal or exceed 20 percent of an individual's annual NIH salary on his/her program eligibility date.

Educational expenses means the cost of the health professional's education, including the tuition expenses and other educational expenses such as fees, books, supplies, educational equipment and materials, and laboratory expenses.

Government loans means loans made by Federal, State, county, or city agencies which are authorized by law to make such loans.

Individual from disadvantaged background means an individual who:

(1) Comes from an environment that inhibited the individual from obtaining the knowledge, skill and ability required to enroll in and graduate from a health professions school; or

(2) Comes from a family with an annual income below a level based on low-income thresholds according to family size published by the U.S. Bureau of the Census, adjusted annually for changes in the Consumer Price Index, and adjusted by the Secretary for use in all health professions programs. The Secretary periodically publishes these income levels in the FEDERAL REGISTER.

Institute, *Center*, or *Agency* (ICA) means an institute, center, or agency of the National Institutes of Health.

Living expenses means the reasonable cost of room and board, transportation and commuting costs, and other reasonable costs incurred during an individual's attendance at an educational institution.

Participant means an individual whose application to the CR-LRP has been approved and whose Program contract has been executed by the Secretary.

Program means the NIH Clinical Research Loan Repayment Program for Individuals from Disadvantaged Backgrounds.

Program eligibility date means the date on which an individual's Program contract is executed by the Secretary and that individual is engaged in approved clinical research as an employee of the NIH.

Qualified educational loans and interest/debt include Government and commercial educational loans and interest for:

(1) Undergraduate, graduate, and health professional school tuition expenses;

(2) Other reasonable educational expenses required by the school(s) attended, including fees, books, supplies, educational equipment and materials, and laboratory expenses; and (3) reasonable living expenses, including the cost of room and board, transportation and commuting costs, and other reasonable living expenses incurred.

Reasonable educational and living expenses means those educational and living expenses which are equal to or less than the sum of the school's estimated

standard student budget for educational and living expenses for the degree program and for the year(s) during which the participant was enrolled in school. If there is no standard budget available from the school or if the participant requests repayment for educational and living expenses which exceed the standard student budget, reasonableness of educational and living expenses incurred must be substantiated by additional contemporaneous documentation, as determined by the Secretary.

Repayable debt means the portion, as established by the Secretary, of an individual's total qualified educational debt relative to the NIH salary, which can be paid by the CR-LRP. Specifically, qualifying educational debt amounts in excess of 50 percent of the debt threshold will be considered for repayment.

Salary means base pay plus quarters, subsistence, and variable housing allowances, if applicable.

School means undergraduate, graduate, and health professions schools which are accredited by a body or bodies recognized for accreditation purposes by the Secretary of Education.

Secretary means the Secretary of Health and Human Services and any other officer or employee of the Department of Health and Human Services to whom the authority involved has been delegated.

Service means the Public Health Service.

State means one of the fifty States, the District of Columbia, the Commonwealth of Puerto Rico, the Northern Mariana Islands, the U.S. Virgin Islands, Guam, American Samoa, and the Trust Territory of the Pacific Islands (the Federated States of Micronesia, the Republic of the Marshall Islands, and the Republic of Palau).

Withdrawal means a request by a participant, prior to the Program making payments on his or her behalf, for withdrawal from Program participation. A withdrawal is without penalty to the participant and without obligation to the Program.

§ 68a.3 Who is eligible to apply?

To be eligible to apply to the CR-LRP, an individual must be a citizen, national, or permanent resident of the United States; hold a M.D., Ph.D., D.O., D.D.S., D.M.D., A.D.N./B.S.N., or equivalent degree; have, on his/her program eligibility date, qualified educational debt equal to or in excess of the debt threshold; and be an individual from a disadvantaged background.

§ 68a.4 Who is eligible to participate?

To be eligible to participate in the CR-LRP, an applicant must have the recommendation of the employing ICA Scientific Program Director, the concurrence of the employing ICA Director, and the approval of the CR-LRC. Since participation in the Program is contingent, in part, upon employment with NIH, a Program contract may not be awarded to an applicant until an employment commitment has been made by the employing ICA Personnel Department.

§ 68a.5 Who is ineligible to participate?

The following individuals are ineligible for CR-LRP participation:

(a) Persons who are not eligible applicants as specified under section 68a.3;

(b) Persons who owe an obligation of health professional service to the Federal Government, a State, or other entity, unless a deferral is granted for the length of his/her service obligation under the CR-LRP. The following are examples of programs which have a service obligation: Physicians Shortage Area Scholarship Program, National Research Service Award Program, Public Health Service Scholarship, National Health Service Corps Scholarship Program, Armed Forces (Army, Navy, or Air Force) Professions Scholarship Program, Indian Health Service Scholarship Program, and the NIH AIDS Research Loan Repayment Program.

(c) Persons who are not NIH employees, such as Intramural Research Training Award (IRTA) recipients, Visiting Fellows, National Research Service Award (NRSA) recipients, Guest Researchers or Special Volunteers, NIH-National Research Council (NRC) Biotechnology Research Associates Program participants, and Intergovernmental Personnel Act (IPA) participants; or

(d) Persons who do not have clinical privileges.

§ 68a.6 How do individuals apply to participate in the CR-LRP?

An application for participation in the CR-LRP shall be submitted to the NIH office which is responsible for the Program's administration, in such form and manner as the Secretary may prescribe.

§ 68a.7 How are applicants selected to participate in the CR-LRP?

To be selected for participation in the CR-LRP, applicants must satisfy the following requirements:

(a) Applicants must meet the eligibility requirements specified in § 68a.3 and § 68a.4.

(b) Applicants must not be ineligible for participation as specified in § 68a.5.

(c) Applicants must be selected for approval by the CR-LRC, based upon a review of their applications.

§ 68a.8 What does the CR-LRP provide to participants?

(a) Loan repayments: For each year of service the individual agrees to serve, with a minimum of 2 years of obligated service, the Secretary may pay up to $20,000 per year of a participant's repayable debt.

(b) Under § 68a.8(a), the Secretary will make payments in the discharge of debt to the extent appropriated funds are available for these purposes.

§ 68a.9 What loans qualify for repayment?

(a) The CR-LRP will repay participants' lenders the principal, interest, and related expenses of qualified Government and commercial educational loans obtained by participants for the following:

(1) Undergraduate, graduate, and health professional school tuition expenses;

(2) Other reasonable educational expenses required by the school(s) attended, including fees, books, supplies, educational equipment and materials, and laboratory expenses; and

(3) Reasonable living expenses, including the cost of room and board, transportation and commuting costs, and other living expenses as determined by the Secretary.

(b) The following educational loans are ineligible for repayment under the CR-LRP:

(1) Loans obtained from other than a government entity or commercial lending institution;

(2) Loans for which contemporaneous documentation is not available;

(3) Loans or portions of loans obtained for educational or living expenses which exceed the standard of reasonableness as determined by the participant's standard school budget for the year in which the loan was made, and are not determined by the Secretary to be reasonable based on additional documentation provided by the individual;

(4) Loans, financial debts, or service obligations incurred under the following programs: Physicians Shortage Area Scholarship Program (Federal or State), National Research Service Award Program, Public Health and National Health Service Corps Scholarship Training Program, National Health Service Corps Scholarship Program, Armed Forces (Army, Navy, or Air Force) Health Professions Scholarship Program, Indian Health Service Program, and similar programs, upon determination by the Secretary, which provide loans, scholarships, loan repayments, or other awards in exchange for a future service obligation;

(5) Any loan in default or not in a current payment status;

(6) Loan amounts which participants have paid or were due to have paid prior to the program eligibility date; and

(7) Loans for which promissory notes have been signed after the program eligibility date.

§ 68a.10 What does an individual have to do in return for loan repayments received under the CR-LRP?

Individuals must agree to be engaged in approved clinical research, as employees of the NIH, for a minimum initial period of two consecutive years.

§ 68a.11 How does an individual receive loan repayments beyond the initial two-year contract?

An individual may apply for and the Secretary may grant extension contracts for one-year periods, if there is sufficient debt remaining to be repaid and the individual is engaged in approved clinical research as an NIH employee.

§ 68a.12 What will happen if an individual does not comply with the terms and conditions of participation in the CR-LRP?

(a) Absent withdrawal (see § 68a.2) or termination under paragraph (d) of this section, any participant who fails to complete the minimum two-year service obligation required under the Program contract will be considered to have breached the contract and will be subject to assessment of monetary damages and penalties as follows:

(1) Participants who leave during the first year of the initial contract are liable for amounts already paid by the NIH on behalf of the participant plus an amount equal to $1,000 multiplied by the number of months of the original service obligation.

(2) Participants who leave during the second year of the contract are liable for amounts already paid by the NIH on behalf of the participant plus $1,000 for each unserved month.

(b) Payments of any amount owed under paragraph (a) of this section shall be made within one year of the participant's breach (or such longer period as determined by the Secretary).

(c) Participants who sign a continuation contract for any year beyond the initial two-year period and fail to complete the one-year period specified are liable for the pro rata amount of any benefits advanced beyond the period of completed service.

(d) Terminations will not be considered a breach of contract in cases where such terminations are beyond the control of the participant as follows:

(1) Terminations for cause or for convenience of the Government will not be considered a breach of contract and monetary damages will not be assessed.

(2) Occasionally, a participant's research assignment may evolve and change to the extent that the individual is no longer engaged in approved clinical research. Similarly, the research needs and priorities of the ICA and/or the NIH may change to the extent that a determination is made that the health professional's skills may be better utilized in a non-clinical research assignment. Under these circumstances, the following will apply:

(i) Program participation and benefits will cease as of the date an individual is no longer engaged in approved clinical research; and

(ii) Normally, job changes of this nature will not be considered a breach of contract on the part of either the NIH or the participant. Based on the recommendation of the ICA Director and concurrence of the Secretary, the participant will be released from the remainder of his or her service obligation without assessment of monetary penalties. The participant in this case will be permitted to retain all Program benefits made or owed by NIH on his/her behalf up to the date the individual is no longer engaged in approved clinical research, except the pro rata amount of any benefits advanced beyond the period of completed service.

§ 68a.13 Under what circumstances can the service or payment obligation be canceled, waived, or suspended?

(a) Any obligation of a participant for service or payment to the Federal Government under this part will be canceled upon the death of the participant.

(b) The Secretary may waive or suspend any service or payment obligation incurred by the participant upon request whenever compliance by the participant:

(1) Is impossible,

(2) Would involve extreme hardship to the participant, or

(3) If enforcement of the service or payment obligation would be against equity and good conscience.

(4) The Secretary may approve a request for a suspension of the service or payment obligations for a period of 1 year. A renewal of this suspension may also be granted.

(c) Compliance by a participant with a service or payment obligation will be

considered impossible if the Secretary determines, on the basis of such information and documentation as may be required, that the participant suffers from a physical or mental disability resulting in the permanent inability of the participant to perform the service or other activities which would be necessary to comply with the obligation.

(d) In determining whether to waive or suspend any or all of the service or payment obligations of a participant as imposing an undue hardship and being against equity and good conscience, the Secretary, on the basis of such information and documentation as may be required, will consider:

(1) The participant's present financial resources and obligations;

(2) The participant's estimated future financial resources and obligations; and

(3) The extent to which the participant has problems of a personal nature, such as a physical or mental disability or terminal illness in the immediate family, which so intrude on the participant's present and future ability to perform as to raise a presumption that the individual will be unable to perform the obligation incurred.

§ 68a.14 When can a CR-LRP payment obligation be discharged in bankruptcy?

Any payment obligation incurred under § 68a.12 may be discharged in bankruptcy under Title 11 of the United States Code only if such discharge is granted after the expiration of the five-year period beginning on the first date that payment is required and only if the bankruptcy court finds that a nondischarge of the obligation would be unconscionable.

§ 68a.15 Additional conditions.

When a shortage of funds exists, participants may be funded partially, as determined by the Secretary. However, once a CR-LRP contract has been signed by both parties, the Secretary will obligate such funds as necessary to ensure that sufficient funds will be available to pay benefits for the duration of the period of obligated service unless, by mutual written agreement between the Secretary and the applicant, specified otherwise. Benefits will be paid on a quarterly basis after each service period unless specified otherwise by mutual written agreement between the Secretary and the applicant. The Secretary may impose additional conditions as deemed necessary.

§ 68a.16 What other regulations and statutes apply?

Several other regulations and statutes apply to this part. These include, but are not necessarily limited to:

Debt Collection Act of 1982, Pub. L. 97–365 (5 U.S.C. 5514);

Fair Credit Reporting Act (15 U.S.C. 1681 *et seq.*);

Federal Debt Collection Procedures Act of 1990, Pub. L. 101–647 (28 U.S.C. 1); and

Privacy Act of 1974 (5 U.S.C. 552a).

PART 68c—NATIONAL INSTITUTE OF CHILD HEALTH AND HUMAN DEVELOPMENT CONTRACEPTION AND INFERTILITY RESEARCH LOAN REPAYMENT PROGRAM

Sec.

68c.1 What is the scope and purpose of the National Institute of Child Health and Human Development (NICHD) Contraception and Infertility Research Loan Repayment Program (CIR-LRP)?
68c.2 Definitions.
68c.3 Who is eligible to apply?
68c.4 Who is eligible to participate?
68c.5 Who is ineligible to participate?
68c.6 How do individuals apply to participate in the CIR-LRP?
68c.7 How are applicants selected to participate in the CIR-LRP?
68c.8 What does the CIR-LRP provide to participants?
68c.9 What loans qualify for repayment?
68c.10 What does an individual have to do in return for loan repayments received under the CIR-LRP?
68c.11 How does an individual receive loan repayments beyond the initial two-year contract?
68c.12 What will happen if an individual does not comply with the terms and conditions of participation in the CIR-LRP?
68c.13 Under what circumstances can the service or payment obligation be canceled, waived, or suspended?
68c.14 When can a CIR-LRP payment obligation be discharged in bankruptcy?
68c.15 Additional conditions.
68c.16 What other regulations and statutes apply?

AUTHORITY: 42 U.S.C. 288–2.

SOURCE: 67 FR 17651, Apr. 11, 2002, unless otherwise noted.

§ 68c.1 What is the scope and purpose of the National Institute of Child Health and Human Development (NICHD) Contraception and Infertility Research Loan Repayment Program (CIR-LRP)?

This part applies to the award of educational loan payments under the National Institute of Child Health and Human Development (NICHD) Contraception and Infertility Research Loan Repayment Program (CIR-LRP) authorized by section 487B of the Public Health Service Act (42 U.S.C. 288–2). The purpose of this CIR-LRP is the recruitment and retention of highly qualified health professionals to conduct contraception and/or infertility research.

§ 68c.2 Definitions.

As used in this part:

Act means the Public Health Service Act, as amended (42 U.S.C. 201 *et seq.*).

Allied health professional means:

(1) A physician assistant; or

(2) A research assistant with at least a bachelor's degree and applicable career goals.

Applicant means an individual who applies to, and meets the eligibility criteria for the CIR-LRP.

Commercial loans means loans made by banks, credit unions, savings and loan associations, not-for-profit organizations, insurance companies, schools, and other financial or credit institutions which are subject to examination and supervision in their capacity as lending institutions by an agency of the United States or of the State in which the lender has its principal place of business.

Contraception and Infertility Research Loan Repayment Program (CIR-LRP or *Program)* means the NICHD Contraception and Infertility Research Loan Repayment Program authorized by section 487B of the Act.

Contraception and Infertility Research Loan Repayment Program (CIR-LRP or *Program) contract* refers to the agreement, which is signed by an applicant and the Secretary, wherein the applicant agrees to participate in research on infertility or contraceptive development and the Secretary agrees to repay qualified educational loans for a prescribed period as specified in this part.

Contraception and Infertility Research Loan Repayment Program (CIR-LRP or *Program) Panel* means a board assembled to review, rank, and approve or disapprove CIR-LRP applications. The Panel is composed of the Deputy Director, NICHD, representatives of NICHD's Office of Administrative Management, respective Program Officers of the Center for Population Research, and other special consultants as required.

Contraceptive development means research whose ultimate goal is to provide new or improved means of preventing pregnancy.

Educational expenses means the cost of the health professional's education, including the tuition expenses and other educational expenses such as fees, books, supplies, educational equipment and materials, and laboratory expenses.

Government loans means loans made by Federal, State, county, or city agencies which are authorized by law to make such loans.

Health professional means an individual who is a physician, Ph.D-level scientist, nurse, or a graduate student or postgraduate research fellow working toward a degree that will enable them to practice in one of those professions.

Infertility research means research whose long-range objective is to evaluate, treat or ameliorate conditions which result in the failure of couples to either conceive or bear young.

Living expenses means the reasonable cost of room and board, transportation and commuting costs, and other reasonable costs incurred during an individual's attendance at an educational institution.

Eligible NICHD-supported extramural site means a site funded by NICHD that can be identified as one of the following:

(1) A Cooperative Specialized Contraception and Infertility Research Center;

(2) A Cooperative Specialized Research Center in Reproduction Research;

(3) A Women's Reproductive Health Research Career Development Center; and

(4) Reproductive Medicine Unit identified as a clinical site for the National Cooperative Reproductive Medicine Network, or other sites as designated by the Director.

NICHD intramural laboratory means a laboratory that is supported by the NICHD intramural research program.

Panel means the NICHD Contraception and Infertility Research Loan Repayment Program Panel.

Participant means an individual whose application to the CIR-LRP has been approved and whose Program contract has been executed by the Secretary.

Qualified educational loans include Government and commercial educational loans, interest and related expenses for—

(1) Undergraduate, graduate, and health professional school tuition expenses;

(2) Other reasonable educational expenses required by the school(s) attended, including fees, books, supplies, educational equipment and materials, and laboratory expenses; and

(3) Reasonable living expenses, including the cost of room and board, transportation and commuting costs, and other reasonable living expenses incurred.

Reasonable educational and living expenses means those educational and living expenses which are equal to or less than the sum of the school's estimated standard student budget for educational and living expenses for the degree program and for the year(s) during which the participant was enrolled in school. If there is no standard budget available from the school or if the participant requests repayment for educational and living expenses which exceed the standard student budget, reasonableness of educational and living expenses incurred must be substantiated by additional contemporaneous documentation, as determined by the Secretary.

Research on infertility or contraceptive development means activities which qualify for participation in the CIR-LRP as determined by the Program Panel.

School means undergraduate, graduate, and health professions schools which are accredited by a body or bodies recognized for accreditation purposes by the Secretary of Education.

Secretary means the Secretary of Health and Human Services and any other officer or employee of the Department of Health and Human Services to whom the authority involved has been delegated.

Service means the Public Health Service.

State means one of the fifty States, the District of Columbia, the Commonwealth of Puerto Rico, the Northern Mariana Islands, the U.S. Virgin Islands, Guam, American Samoa, and the Trust Territory of the Pacific Islands (the Federated States of Micronesia, the Republic of the Marshall Islands, and the Republic of Palau).

Withdrawal means an individual's cessation of participation in the Program pursuant to a request by that participant that is implemented by the Secretary prior to the Program making payments on the participant's behalf. A withdrawal is without penalty to the participant and without obligation to the Program.

§68c.3 Who is eligible to apply?

To be eligible to apply to the CIR-LRP, an individual must be a qualified health or allied health professional who is at the time of application, or will be at the time of inception into the CIR-LRP, engaged in employment/training at an NICHD intramural laboratory or an eligible NICHD-supported extramural site.

§68c.4 Who is eligible to participate?

To be eligible to participate in the CIR-LRP, the applicant must have institutional assurance of employment/affiliation with the NICHD intramural laboratory or eligible NICHD-supported extramural site and approval of the CIR-LRP Panel, must meet the criteria specified in §68c.3, and not be ineligible to participate under §68c.5.

§68c.5 Who is ineligible to participate?

The following individuals are ineligible for CIR-LRP participation:

(a) Persons who are not eligible applicants as specified under §68c.3;

(b) Persons who owe an obligation of health professional service to the Federal Government, a State, or other entity. The following are examples of programs which have a service obligation: Physicians Shortage Area Scholarship Program, National Research Service Award Program, Public Health Service Scholarship, National Health Service Corps Scholarship Program, Armed Forces (Army, Navy, or Air Force) Professions Scholarship Program, Indian Health Service Scholarship Program, National Health Service Corp Loan Repayment Program, and NIH loan repayment programs.

§ 68c.6 How do individuals apply to participate in the CIR-LRP?

An application for participation in the CIR-LRP shall be submitted to the Center for Population Research, NICHD, NIH, which is responsible for the Program's administration, in such form and manner as the Secretary may prescribe.

§ 68c.7 How are applicants selected to participate in the CIR-LRP?

To be selected for participation in the CIR-LRP, applicants must satisfy the following requirements:

(a) Applicants must meet the eligibility requirements specified in § 68c.3 and § 68c.4.

(b) Applicants must not be ineligible for participation as specified in § 68c.5.

(c) Applicants must propose repayment of a loan that meets the requirements of § 68c.9.

(d) Applicants must be selected for approval by the CIR-LRP Panel based upon a review of their applications.

§ 68c.8 What does the CIR-LRP provide to participants?

(a) *Loan repayments*. Upon receipt of an individual's written commitment to serve a minimum initial period of two years of obligated service in accordance with this part, the Secretary may pay up to $35,000 per year of a participant's repayable debt for each year the individual serves.

(b) Under paragraph (a) of this section, the Secretary will make payments in the discharge of debt to the extent appropriated funds are available for that purpose. When a shortage of funds exists, participants may be funded partially, as determined by the Secretary. However, once a CIR-LRP contract has been signed by both parties, the Secretary will obligate such funds as necessary to ensure that sufficient funds will be available to pay benefits for the duration of the period of obligated service unless otherwise specified by mutual written agreement between the Secretary and the applicant. Benefits will be paid on a quarterly basis after each service period unless otherwise specified by mutual written agreement between the Secretary and the applicant.

§ 68c.9 What loans qualify for repayment?

(a) The CIR-LRP will repay participants' lenders the principal, interest, and related expenses of qualified Government and commercial educational loans obtained by participants for the following:

(1) Undergraduate, graduate, and health professional school tuition expenses;

(2) Other reasonable educational expenses required by the school(s) attended, including fees, books, supplies, educational equipment and materials, and laboratory expenses; and

(3) Reasonable living expenses, including the cost of room and board, transportation and commuting costs, and other living expenses as determined by the Secretary.

(b) The following educational loans are ineligible for repayment under the CIR-LRP:

(1) Loans obtained from other than a government entity or commercial lending institution;

(2) Loans for which contemporaneous documentation is not available;

(3) Loans or portions of loans obtained for educational or living expenses which exceed the standard of reasonableness as determined by the participant's standard school budget for the year in which the loan was made, and are not determined by the Secretary to be reasonable based on additional documentation provided by the individual;

(4) Loans, financial debts, or service obligations incurred under the following programs: Physicians Shortage

Area Scholarship Program (Federal or State), National Research Service Award Program, Public Health and National Health Service Corps Scholarship Training Program, National Health Service Corps Scholarship Program, Armed Forces (Army, Navy, or Air Force) Health Professions Scholarship Program, Indian Health Service Program, and similar programs, upon determination by the Secretary, which provide loans, scholarships, loan repayments, or other awards in exchange for a future service obligation;

(5) Any loan in default or not in a current payment status;

(6) Loan amounts which participants have paid or were due for payment prior to inception into the CIR-LRP; and

(7) Loans for which promissory notes have been signed after the individual's acceptance into the CIR-LRP.

§68c.10 What does an individual have to do in return for loan repayments received under the CIR-LRP?

Individuals must make a written commitment in accordance with this part to conduct, and must actually conduct research with respect to contraception and/or infertility at an NICHD intramural laboratory or an eligible NICHD-supported extramural site for a minimum initial period of two years.

§68c.11 How does an individual receive loan repayments beyond the initial two-year contract?

An individual may apply for and the Secretary may grant extension contracts for one-year periods, if there is sufficient debt remaining to be repaid and the individual is engaged in research on infertility or contraceptive development at an NICHD intramural laboratory or eligible NICHD-supported extramural site.

§68c.12 What will happen if an individual does not comply with the terms and conditions of participation in the CIR-LRP?

(a) Absent withdrawal (see §68c.2) or termination under paragraph (d) of this section, any participant who fails to begin or complete the minimum two-year service obligation required under the Program contract, will be considered to have breached the contract and will be subject to assessment of monetary damages and penalties as follows:

(1) Participants who leave during the first year of the initial contract are liable for amounts already paid by the CIR-LRP on behalf of the participant plus an amount equal to $1,000 multiplied by the number of months of the original two-year service obligation.

(2) Participants who leave during the second year of the contract are liable for amounts already paid by the NICHD on behalf of the participant plus $1,000 for each unserved month.

(b) Participants who sign a continuation contract for any year beyond the initial two-year period and fail to complete the one-year period specified are liable for the pro rata amount of any benefits advanced beyond the period of completed service plus an amount equal to the number of months of obligated service that were not completed by the participant multiplied by $1,000.

(c) Payments of any amount owed under paragraph (a) or (b) of this section shall be made within one year of the participant's breach (or such longer period as determined by the Secretary).

(d) Terminations will not be considered a breach of contract in cases where such terminations are beyond the control of the participant as follows:

(1) Terminations for cause or for convenience of the Government that are not based upon a breach or default of the participant will not be considered a breach of contract and monetary damages will not be assessed.

(2) The participant transfers to another NICHD intramural laboratory or eligible NICHD-supported extramural site, in which case the participant remains bound to any and all obligations of the contract.

(3) The participant transfers to a site other than an NICHD intramural laboratory or eligible NICHD-supported extramural site, in which case the participant may not be assessed monetary penalties if, in the judgement of the CIR-LRP Panel, the participant continues to engage in contraception and/or infertility research for any remaining period of obligated service as set forth in the contract.

§ 68c.13 Under what circumstances can the service or payment obligation be canceled, waived, or suspended?

(a) Any obligation of a participant for service or payment to the Federal Government under this part will be canceled upon the death of the participant.

(b)(1) The Secretary may waive or suspend any service or payment obligation incurred by the participant upon request whenever compliance by the participant:

(i) Is impossible;

(ii) Would involve extreme hardship to the participant; or

(iii) If enforcement of the service or payment obligation would be against equity and good conscience.

(2) The Secretary may approve a request for a suspension of the service or payment obligations for a period of 1 year. A renewal of this suspension may also be granted.

(c) Compliance by a participant with a service or payment obligation will be considered impossible if the Secretary determines, on the basis of information and documentation as may be required, that the participant suffers from a physical or mental disability resulting in the permanent inability of the participant to perform the service or other activities which would be necessary to comply with the obligation.

(d) In determining whether to waive or suspend any or all of the service or payment obligations of a participant as imposing an undue hardship and being against equity and good conscience, the Secretary, on the basis of information and documentation as may be required, will consider:

(1) The participant's present financial resources and obligations;

(2) The participant's estimated future financial resources and obligations; and

(3) The extent to which the participant has problems of a personal nature, such as a physical or mental disability or terminal illness in the immediate family, which so intrude on the participant's present and future ability to perform as to raise a presumption that the individual will be unable to perform the obligation incurred.

§ 68c.14 When can a CIR-LRP payment obligation be discharged in bankruptcy?

Any payment obligation incurred under § 68c.12 may be discharged in bankruptcy under Title 11 of the United States Code only if such discharge is granted after the expiration of the five-year period beginning on the first date that payment is required and only if the bankruptcy court finds that a nondischarge of the obligation would be unconscionable.

§ 68c.15 Additional conditions.

In order to protect or conserve Federal funds or to carry out the purposes of section 487B of the Act, or of this subpart, the Secretary may impose additional conditions as a condition of any approval, waiver or suspension authorized by this subpart.

§ 68c.16 What other regulations and statutes apply?

Several other regulations and statutes apply to this part. These include, but are not necessarily limited to:

Debt Collection Act of 1982, Public Law 97–365 (5 U.S.C. 5514);

Fair Credit Reporting Act (15 U.S.C. 1681 *et seq.*);

Federal Debt Collection Procedures Act of 1990, Public Law 101–647 (28 U.S.C. 1); and

Privacy Act of 1974 (5 U.S.C. 552a).

SUBCHAPTER F—QUARANTINE, INSPECTION, LICENSING

PART 70—INTERSTATE QUARANTINE

Sec.
70.1 General definitions.
70.2 Measures in the event of inadequate local control.
70.3 All communicable diseases.
70.4 Report of disease.
70.5 Certain communicable diseases; special requirements.
70.6 Apprehension and detention of persons with specific diseases.
70.7 Responsibility with respect to minors, wards, and patients.
70.8 Members of military and naval forces.
70.9 Vaccination clinics.

AUTHORITY: Secs. 215 and 311 of the Public Health Service (PHS) Act, as amended (42 U.S.C. 216, 243); section 361–369, PHS Act, as amended (42 U.S.C. 264–272); 31 U.S.C. 9701.

SOURCE: 65 FR 49908, Aug. 16, 2000, unless otherwise noted.

§ 70.1 General definitions.

As used in this part, terms shall have the following meaning:

(a) *Communicable diseases* means illnesses due to infectious agents or their toxic products, which may be transmitted from a reservoir to a susceptible host either directly as from an infected person or animal or indirectly through the agency of an intermediate plant or animal host, vector, or the inanimate environment.

(b) *Communicable period* means the period or periods during which the etiologic agent may be transferred directly or indirectly from the body of the infected person or animal to the body of another.

(c) *Conveyance* means any land or air carrier, or any vessel as defined in paragraph (h) of this section.

(d) *Incubation period* means the period between the implanting of disease organisms in a susceptible person and the appearance of clinical manifestation of the disease.

(e) *Interstate traffic* means:

(1) The movement of any conveyance or the transportation of persons or property, including any portion of such movement or transportation that is entirely within a State or possession—

(i) From a point of origin in any State or possession to a point of destination in any other State or possession; or

(ii) Between a point of origin and a point of destination in the same State or possession but through any other State, possession, or contiguous foreign country.

(2) Interstate traffic does not include the following:

(i) The movement of any conveyance which is solely for the purpose of unloading persons or property transported from a foreign country, or loading persons or property for transportation to a foreign country.

(ii) The movement of any conveyance which is solely for the purpose of effecting its repair, reconstruction, rehabilitation, or storage.

(f) *Possession* means any of the possessions of the United States, including Puerto Rico and the Virgin Islands.

(g) *State* means any State, the District of Columbia, Puerto Rico, and the Virgin Islands.

(h) *Vessel* means any passenger-carrying, cargo, or towing vessel exclusive of:

(1) Fishing boats including those used for shell-fishing;

(2) Tugs which operate only locally in specific harbors and adjacent waters;

(3) Barges without means of self-propulsion;

(4) Construction-equipment boats and dredges; and

(5) Sand and gravel dredging and handling boats.

§ 70.2 Measures in the event of inadequate local control.

Whenever the Director of the Centers for Disease Control and Prevention determines that the measures taken by health authorities of any State or possession (including political subdivisions thereof) are insufficient to prevent the spread of any of the communicable diseases from such State or possession to any other State or possession, he/she may take such measures to prevent such spread of the diseases as he/she deems reasonably necessary, including inspection, fumigation, disinfection, sanitation, pest extermination, and destruction of animals or

articles believed to be sources of infection.

§ 70.3 All communicable diseases.

A person who has a communicable disease in the communicable period shall not travel from one State or possession to another without a permit from the health officer of the State, possession, or locality of destination, if such permit is required under the law applicable to the place of destination. Stop-overs other than those necessary for transportation connections shall be considered as places of destination.

§ 70.4 Report of disease.

The master of any vessel or person in charge of any conveyance engaged in interstate traffic, on which a case or suspected case of a communicable disease develops shall, as soon as practicable, notify the local health authority at the next port of call, station, or stop, and shall take such measures to prevent the spread of the disease as the local health authority directs.

§ 70.5 Certain communicable diseases; special requirements.

The following provisions are applicable with respect to any person who is in the communicable period of cholera, plague, smallpox, typhus or yellow fever, or who, having been exposed to any such disease, is in the incubation period thereof:

(a) *Requirements relating to travelers.* (1) No such person shall travel from one State or possession to another, or on a conveyance engaged in interstate traffic, without a written permit of the Surgeon General or his/her authorized representative.

(2) Application for a permit may be made directly to the Surgeon General or to his/her representative authorized to issue permits.

(3) Upon receipt of an application, the Surgeon General or his/her authorized representative shall, taking into consideration the risk of introduction, transmission, or spread of the disease from one State or possession to another, reject it, or issue a permit that may be conditioned upon compliance with such precautionary measures as he/she shall prescribe.

(4) A person to whom a permit has been issued shall retain it in his/her possession throughout the course of his/her authorized travel and comply with all conditions prescribed therein, including presentation of the permit to the operators of conveyances as required by its terms.

(b) *Requirements relating to operation of conveyances.* (1) The operator of any conveyance engaged in interstate traffic shall not knowingly:

(i) Accept for transportation any person who fails to present a permit as required by paragraph (a) of this section; or

(ii) Transport any person in violation of conditions prescribed in his/her permit.

(2) Whenever a person subject to the provisions of this section is transported on a conveyance engaged in interstate traffic, the operator thereof shall take such measures to prevent the spread of the disease, including submission of the conveyance to inspection, disinfection and the like, as an officer of the Public Health Service designated by the Surgeon General for such purposes deems reasonably necessary and directs.

§ 70.6 Apprehension and detention of persons with specific diseases.

Regulations prescribed in this part authorize the detention, isolation, quarantine, or conditional release of individuals, for the purpose of preventing the introduction, transmission, and spread of the communicable diseases listed in an Executive Order setting out a list of quarantinable communicable diseases, as provided under section 361(b) of the Public Health Service Act. Executive Order 13295, of April 4, 2003, contains the current revised list of quarantinable communicable diseases, and may be obtained at *http://www.cdc.gov*, or at *http://www.archives.gov/federal_register*. If this Order is amended, HHS will enforce that amended order immediately and update this reference.

[68 FR 17559, Apr. 10, 2003]

§ 70.7 Responsibility with respect to minors, wards, and patients.

A parent, guardian, physician, nurse, or other such person shall not transport, or procure or furnish transportation for any minor child or ward, patient or other such person who is in the communicable period of a communicable disease, except in accordance with provisions of this part.

§ 70.8 Members of military and naval forces.

The provisions of §§ 70.3, 70.4, 70.5, 70.7, and this section shall not apply to members of the military or naval forces, and medical care or hospital beneficiaries of the Army, Navy, Veterans' Administration, or Public Health Service, when traveling under competent orders: *Provided,* That in the case of persons otherwise subject to the provisions of § 70.5 the authority authorizing the travel requires precautions to prevent the possible transmission of infection to others during the travel period.

§ 70.9 Vaccination clinics.

(a) The Director may establish vaccination clinics, through contract or otherwise, authorized to administer vaccines and/or other prophylaxis.

(b) A vaccination fee may be charged for individuals not enrolled in Medicare Part B to cover costs associated with administration of the vaccine and/or other prophylaxis. Such fee is to be collected at the time that the vaccine is administered. The vaccination fee, if imposed, is shown in the following table:

Vaccine	Effective dates	Amount
Fluarix	[1] 1/25/05	[2] $25.00

[1] Continuing for one year.
[2] $7.00 for the vaccine and $18.00 for administration.

[70 FR 3493, Jan. 25, 2005]

PART 71—FOREIGN QUARANTINE

Subpart A—Definitions and General Provisions

Sec.
71.1 Scope and definitions.
71.2 Penalties.
71.3 Designation of yellow fever vaccination centers; Validation stamps.

Subpart B—Measures at Foreign Ports

71.11 Bills of health.

Subpart C—Notice of Communicable Disease Prior to Arrival

71.21 Radio report of death or illness.

Subpart D—Health Measures at U.S. Ports: Communicable Diseases

71.31 General provisions.
71.32 Persons, carriers, and things.
71.33 Persons: Isolation and surveillance.
71.34 Carriers of U.S. military services.
71.35 Report of death or illness on carrier during stay in port.

Subpart E—Requirements Upon Arrival at U.S. Ports: Sanitary Inspection

71.41 General provisions.
71.42 Disinsection of imports.
71.43 Exemption for mails.
71.44 Disinsection of aircraft.
71.45 Food, potable water, and waste: U.S. seaports and airports.
71.46 Issuance of Deratting Certificates and Deratting Exemption Certificates.
71.47 Special provisions relating to airports: Office and isolation facilities.
71.48 Carriers in intercoastal and interstate traffic.

Subpart F—Importations

71.51 Dogs and cats.
71.52 Turtles, tortoises, and terrapins.
71.53 Nonhuman primates.
71.54 Etiological agents, hosts, and vectors.
71.55 Dead bodies.
71.56 African rodents and other animals that may carry the monkeypox virus.

AUTHORITY: Secs. 215 and 311 of Public Health Service (PHS) Act. as amended (42 U.S.C. 216, 243); secs. 361–369, PHS Act, as amended (42 U.S.C. 264–272).

SOURCE: 50 FR 1519, Jan. 11, 1985, unless otherwise noted.

Subpart A—Definitions and General Provisions

§ 71.1 Scope and definitions.

(a) The provisions of this part contain the regulations to prevent the introduction, transmission, and spread of communicable disease from foreign countries into the States or possessions of the United States. Regulations pertaining to preventing the interstate

spread of communicable diseases are contained in 21 CFR parts 1240 and 1250.

(b) As used in this part the term:

Carrier means a ship, aircraft, train, road vehicle, or other means of transport, including military.

Communicable disease means an illness due to a specific infectious agent or its toxic products which arises through transmission of that agent or its products from an infected person or animal or a reservoir to a susceptible host, either directly, or indirectly through an intermediate animal host, vector, or the inanimate environment.

Contamination means the presence of undesirable substances or material which may contain infectious agents or their toxic products.

Controlled Free Pratique means permission for a carrier to enter a U.S. port, disembark, and begin operation under certain stipulated conditions.

Deratting Certificate means a certificate issued under the instructions of the Director, in the form prescribed by the International Health Regulations, recording the inspection and deratting of the ship.

Deratting Exemption Certificate means a certificate issued under the instructions of the Director, in the form prescribed by the International Health Regulations, recording the inspection and exemption from deratting of the ship which is rodent free.

Detention means the temporary holding of a person, ship, aircraft, or other carrier, animal, or thing in such place and for such period of time as may be determined by the Director.

Director means the Director, Centers for Disease Control, Public Health Service, Department of Health and Human Services, or his/her authorized representative.

Disinfection means the killing of infectious agents or inactivation of their toxic products outside the body by direct exposure to chemical or physical agents.

Disinfestation means any chemical or physical process serving to destroy or remove undesired small animal forms, particularly arthropods or rodents, present upon the person, the clothing, or the environment of an individual, or upon animals and carriers.

Disinsection means the operation in which measures are taken to kill the insect vectors of human disease present in carriers and containers.

Educational purpose means use in the teaching of a defined educational program at the university level or equivalent.

Exhibition purpose means use as a part of a display in a facility comparable to a zoological park or in a trained animal act. The animal display must be open to the general public at routinely scheduled hours on 5 or more days of each week. The trained animal act must be routinely scheduled for multiple performances each week and open to the general public except for reasonable vacation and retraining periods.

Ill person means a person who:

(1) Has a temperature of 100 °F. (or 38 °C.) or greater, accompanied by a rash, glandular swelling, or jaundice, or which has persisted for more than 48 hours; or

(2) Has diarrhea, defined as the occurrence in a 24-hour period of three or more loose stools or of a greater than normal (for the person) amount of loose stools.

International Health Regulations means the International Health Regulations of the World Health Organization, adopted by the Twenty-Second World Health Assembly in 1969, as amended by the Twenty-Sixth World Health Assembly in 1973, the Thirty-Fourth World Health Assembly in 1981, and as may be further amended.

International voyage means: (1) In the case of a carrier, a voyage between ports or airports of more than one country, or a voyage between ports or airports of the same country if the ship or aircraft stopped in any other country on its voyage; or (2) in the case of a person, a voyage involving entry into a country other than the country in which that person begins his/her voyage.

Isolation means: (1) When applied to a person or group of persons, the separation of that person or group of persons from other persons, except the health staff on duty, in such a manner as to prevent the spread of infection; or (2) when applied to animals, the separation of an animal or group of animals

from persons, other animals, or vectors of disease in such a manner as to prevent the spread of infection.

Military services means the U.S. Army, the U.S. Air Force, the U.S. Navy, and the U.S. Coast Guard.

Scientific purpose means use for scientific research following a defined protocol and other standards for research projects as normally conducted at the university level. The term also includes the use for safety testing, potency testing, and other activities related to the production of medical products.

Surveillance means the temporary supervision of a person who may have or has been exposed to a communicable disease.

U.S. port means any seaport, airport, or border crossing point under the control of the United States.

United States means the several States, the District of Columbia, Guam, the Commonwealth of Puerto Rico, the Northern Mariana Islands, the Virgin Islands, American Samoa, and the Trust Territory of the Pacific Islands.

Vector means an animal (including insects) or thing which conveys or is capable of conveying infectious agents from a person or animal to another person or animal.

§71.2 Penalties.

Any person violating any provision of these regulations shall be subject to a fine of not more than $1,000 or to imprisonment for not more than 1 year, or both, as provided in section 368 of the Public Health Service Act (42 U.S.C. 271).

§71.3 Designation of yellow fever vaccination centers; Validation stamps.

(a) *Designation of yellow fever vaccination centers.* (1) The Director is responsible for the designation of yellow fever vaccination centers authorized to issue certificates of vaccination. This responsibility is delegated by the Director to a State or territorial health department with respect to yellow fever vaccination activities of non-Federal medical, public health facilities, and licensed physicians functioning within the respective jurisdictions of a State or territorial health department. Designation may be made upon application and presentation of evidence satisfactory to a State or territorial health department that the applicant has adequate facilities and professionally trained personnel for the handling, storage, and administration of a safe, potent, and pure yellow fever vaccine. Medical facilities of Federal agencies are authorized to obtain yellow fever vaccine without being designated as a yellow fever vaccination center by the Director.

(2) A designated yellow fever vaccination center shall comply with the instruction issued by the Director or by a delegated officer or employee of a State or territorial health department for the handling, storage, and administration of yellow fever vaccine. If a designated center fails to comply with such instruction, after notice to the center, the Director or, for non-Federal centers, a State or territorial health department, may revoke designation.

(b) *Validation stamps.* International Certificates of Vaccination against cholera and yellow fever issued for vaccinations performed in the United States shall be validated by:

(1) The Seal of the Public Health Service; or

(2) The Seal of the Department of State; or

(3) The stamp of the Department of Defense; or

(4) The stamp issued to the National Aeronautics and Space Administration; or

(5) The stamp issued by a State or territorial health department; or

(6) An official stamp of a design and size approved by the Director for such purpose.

Subpart B—Measures at Foreign Ports

§71.11 Bills of health.

A carrier at any foreign port clearing or departing for any U.S. port shall not be required to obtain or deliver a bill of health.

Subpart C—Notice of Communicable Disease Prior to Arrival

§ 71.21 Radio report of death or illness.

(a) The master of a ship destined for a U.S. port shall report immediately to the quarantine station at or nearest the port at which the ship will arrive, the occurrence, on board, of any death or any ill person among passengers or crew (including those who have disembarked or have been removed) during the 15-day period preceding the date of expected arrival or during the period since departure from a U.S. port (whichever period of time is shorter).

(b) The commander of an aircraft destined for a U.S. airport shall report immediately to the quarantine station at or nearest the airport at which the aircraft will arrive, the occurrence, on board, of any death or ill person among passengers or crew.

(c) In addition to paragraph (a) of this section, the master of a ship carrying 13 or more passengers must report by radio 24 hours before arrival the number of cases (including zero) of diarrhea in passengers and crew recorded in the ship's medical log during the current cruise. All cases of diarrhea that occur after the 24 hour report must also be reported not less than 4 hours before arrival.

(Approved by the Office of Management and Budget under control number 0920–0134)

Subpart D—Health Measures at U.S. Ports: Communicable Diseases

§ 71.31 General provisions.

(a) Upon arrival at a U.S. port, a carrier will not undergo inspection unless the Director determines that a failure to inspect will present a threat of introduction of communicable diseases into the United States, as may exist when the carrier has on board individual(s) reportable in accordance with § 71.21 or meets the circumstances described in § 71.42. Carriers not subject to inspection under this section will be subject to sanitary inspection under § 71.41 of this part.

(b) The Director may require detention of a carrier until the completion of the measures outlined in this part that are necessary to prevent the introduction or spread of a communicable disease. The Director may issue a controlled free pratique to the carrier stipulating what measures are to be met, but such issuance does not prevent the periodic boarding of a carrier and the inspection of persons and records to verify that the conditions have been met for granting the pratique.

§ 71.32 Persons, carriers, and things.

(a) Whenever the Director has reason to believe that any arriving person is infected with or has been exposed to any of the communicable diseases listed in an Executive Order, as provided under section 361(b) of the Public Health Service Act, he/she may isolate, quarantine, or place the person under surveillance and may order disinfection or disinfestation, fumigation, as he/she considers necessary to prevent the introduction, transmission or spread of the listed communicable diseases. Executive Order 13295, of April 4, 2003, contains the current revised list of quarantinable communicable diseases, and may be obtained at *http://www.cdc.gov* and *http://www.archives.gov/federal_register*. If this Order is amended, HHS will enforce that amended order immediately and update this reference.

(b) Whenever the Director has reason to believe that any arriving carrier or article or thing on board the carrier is or may be infected or contaminated with a communicable disease, he/she may require detention, disinfection, disinfestation, fumigation, or other related measures respecting the carrier or article or thing as he/she considers necessary to prevent the introduction, transmission, or spread of communicable diseases.

[68 FR 17559, Apr. 10, 2003]

§ 71.33 Persons: Isolation and surveillance.

(a) Persons held in isolation under this subpart may be held in facilities suitable for isolation and treatment.

(b) The Director may require isolation where surveillance is authorized in this subpart whenever the Director

considers the risk of transmission of infection to be exceptionally serious.

(c) Every person who is placed under surveillance by authority of this subpart shall, during the period of surveillance:

(1) Give information relative to his/her health and his/her intended destination and report, in person or by telephone, to the local health officer having jurisdiction over the areas to be visited, and report for medical examinations as may be required;

(2) Upon arrival at any address other than that stated as the intended destination when placed under surveillance, or prior to departure from the United States, inform, in person or by telephone, the health officer serving the health jurisdiction from which he/she is departing.

(d) From time to time the Director may, in accordance with section 322 of the Public Health Service Act, enter into agreements with public or private medical or hospital facilities for providing care and treatment for persons detained under this part.

(Approved by the Office of Management and Budget under control number 0920–0134)

[50 FR 1519, Jan. 11, 1985; 50 FR 3910, Jan. 29, 1985]

§ 71.34 Carriers of U.S. military services.

(a) Carriers belonging to or operated by the military services of the United States may be exempted from inspection if the Director is satisfied that they have complied with regulations of the military services which also meet the requirements of the regulations in this part. (For applicable regulations of the military services, see Army Regulation No. 40–12, Air Force Regulation No. 161–4, Secretary of the Navy Instruction 6210.2, and Coast Guard Commandant Instruction 6210.2).

(b) Notwithstanding exemption from inspection of carriers under this section, animals or articles on board shall be required to comply with the applicable requirements of subpart F of this part.

§ 71.35 Report of death or illness on carrier during stay in port.

The master of any carrier at a U.S. port shall report immediately to the quarantine station at or nearest the port the occurrence, on board, of any death or any ill person among passengers or crew.

(Approved by the Office of Management and Budget under control number 0920–0134)

Subpart E—Requirements Upon Arrival at U.S. Ports: Sanitary Inspection

§ 71.41 General provisions.

Carriers arriving at a U.S. port from a foreign area shall be subject to a sanitary inspection to determine whether there exists rodent, insect, or other vermin infestation, contaminated food or water, or other insanitary conditions requiring measures for the prevention of the introduction, transmission, or spread of communicable disease.

§ 71.42 Disinfection of imports.

When the cargo manifest of a carrier lists articles which may require disinfection under the provisions of this part, the Director shall disinfect them on board or request the appropriate customs officer to keep the articles separated from the other cargo pending appropriate disposition.

§ 71.43 Exemption for mails.

Except to the extent that mail contains any article or thing subject to restrictions under subpart F of this part, nothing in the regulations in this part shall render liable to detention, disinfection, or destruction any mail conveyed under the authority of the postal administration of the United States or of any other Government.

§ 71.44 Disinsection of aircraft.

(a) The Director may require disinsection of an aircraft if it has left a foreign area that is infected with insect-borne communicable disease and the aircraft is suspected of harboring insects of public health importance.

(b) Disinsection shall be the responsibility of the air carrier or, in the case of aircraft not for hire, the pilot in command, and shall be subject to monitoring by the Director.

(c) Disinsection of the aircraft shall be accomplished immediately after landing and blocking.

(1) The cargo compartment shall be disinsected before the mail, baggage, and other cargo are discharged.

(2) The rest of the aircraft shall be disinsected after passengers and crew deplane.

(d) Disinsection shall be performed with an approved insecticide in accordance with the manufacturer's instructions. The current list of approved insecticides and sources may be obtained from the Division of Quarantine, Center for Prevention Services, Centers for Disease Control, Atlanta, GA 30333.

§ 71.45 Food, potable water, and waste: U.S. seaports and airports.

(a) Every seaport and airport shall be provided with a supply of potable water from a watering point approved by the Commissioner of Food and Drugs, Food and Drug Administration, in accordance with standards established in title 21, Code of Federal Regulations, parts 1240 and 1250.

(b) All food and potable water taken on board a ship or aircraft at any seaport or airport intended for human consumption thereon shall be obtained from sources approved in accordance with regulations cited in paragraph (a) of this section.

(c) Aircraft inbound or outbound on an international voyage shall not discharge over the United States any excrement, or waste water or other polluting materials. Arriving aircraft shall discharge such matter only at servicing areas approved under regulations cited in paragraph (a) of this section.

§ 71.46 Issuance of Deratting Certificates and Deratting Exemption Certificates.

Valid Deratting Certificates or Deratting Exemption Certificates are not required for ships to enter a U.S. seaport. In accordance with Article 17 of the International Health Regulations, the Public Health Service may perform rodent infestation inspections and issue Deratting Certificates and Deratting Exemption Certificates.

§ 71.47 Special provisions relating to airports: Office and isolation facilities.

Each U.S. airport which receives international traffic shall provide without cost to the Government suitable office, isolation, and other exclusive space for carrying out the Federal responsibilities under this part.

§ 71.48 Carriers in intercoastal and interstate traffic.

Carriers, on an international voyage, which are in traffic between U.S. ports, shall be subject to inspection as described in §§ 71.31 and 71.41 when there occurs on board, among passengers or crew, any death, or any ill person, or when illness is suspected to be caused by insanitary conditions.

Subpart F—Importations

§ 71.51 Dogs and cats.

(a) *Definitions.*

As used in this section the term:

Cat means all domestic cats.

Confinement means restriction of a dog or cat to a building or other enclosure at a U.S. port, en route to destination and at destination, in isolation from other animals and from persons except for contact necessary for its care or, if the dog or cat is allowed out of the enclosure, muzzling and keeping it on a leash.

Dog means all domestic dogs.

Owner means owner or agent.

Valid rabies vaccination certificate means a certificate which was issued for a dog not less than 3 months of age at the time of vaccination and which:

(1) Identifies a dog on the basis of breed, sex, age, color, markings, and other identifying information.

(2) Specifies a date of rabies vaccination at least 30 days before the date of arrival of the dog at a U.S. port.

(3) Specifies a date of expiration which is after the date of arrival of the dog at a U.S. port. If no date of expiration is specified, then the date of vaccination shall be no more than 12 months before the date of arrival at a U.S. port.

(4) Bears the signature of a licensed veterinarian.

(b) *General requirements for admission of dogs and cats*—(1) *Inspection by Director*. The Director shall inspect all dogs and cats which arrive at a U.S. port, and admit only those dogs and cats which show no signs of communicable disease as defined in §71.1.

(2) *Examination by veterinarian and confinement of dogs and cats*. When, upon inspection, a dog or cat does not appear to be in good health on arrival (e.g., it has symptoms such as emaciation, lesions of the skin, nervous system disturbances, jaundice, or diarrhea), the Director may require prompt confinement and give the owner an opportunity to arrange for a licensed veterinarian to examine the animal and give or arrange for any tests or treatment indicated. The Director will consider the findings of the examination and tests in determining whether or not the dog or cat may have a communicable disease. The owner shall bear the expense of the examination, tests, and treatment. When it is necessary to detain a dog or cat pending determination of its admissibility, the owner shall provide confinement facilities which in the judgment of the Director will afford protection against any communicable disease. The owner shall bear the expense of confinement. Confinement shall be subject to conditions specified by the Director to protect the public health.

(3) *Record of sickness or death of dogs and cats and requirements for exposed animals*. (i) The carrier responsible for the care of dogs and cats shall maintain a record of sickness or death of animals en route to the United States and shall submit the record to the quarantine station at the U.S. port upon arrival. Dogs or cats which have become sick while en route or are dead on arrival shall be separated from other animals as soon as the sickness or death is discovered, and shall be held in confinement pending any necessary examination as determined by the Director.

(ii) When, upon inspection, a dog or cat appears healthy but, during shipment, has been exposed to a sick or dead animal suspected of having a communicable disease, the exposed dog or cat shall be admitted only if examination or tests made on arrival reveal no evidence that the animal may be infected with a communicable disease. The provisions of paragraph (b)(2) of this section shall be applicable to the examination or tests.

(4) *Sanitation*. When the Director finds that the cages or other containers of dogs or cats arriving in the United States are in an insanitary or other condition that may constitute a communicable disease hazard, the dogs or cats shall not be admitted in such containers unless the owner has the containers cleaned and disinfected.

(c) *Rabies vaccination requirements for dogs*. (1) A valid rabies vaccination certificate is required at a U.S. port for admission of a dog unless the owner submits evidence satisfactory to the Director that:

(i) If a dog is less than 6 months of age, it has been only in a country determined by the Director to be rabies-free (a current list of rabies-free countries may be obtained from the Division of Quarantine, Center for Prevention Services, Centers for Disease Control, Atlanta, GA 30333); or

(ii) If a dog is 6 months of age or older, for the 6 months before arrival, it has been only in a country determined by the Director to be rabies-free; or

(iii) The dog is to be taken to a research facility to be used for research purposes and vaccination would interfere with its use for such purposes.

(2) Regardless of the provisions of paragraph (c)(1) of this section, the Director may authorize admission as follows:

(i) If the date of vaccination shown on the vaccination certificate is less than 30 days before the date of arrival, the dog may be admitted, but must be confined until at least 30 days have elapsed since the date of vaccination;

(ii) If the dog is less than 3 months of age, it may be admitted, but must be confined until vaccinated against rabies at 3 months of age and for at least 30 days after the date of vaccination;

(iii) If the dog is 3 months of age or older, it may be admitted, but must be confined until it is vaccinated against rabies. The dog must be vaccinated within 4 days after arrival at destination but no more than 10 days after arrival at a U.S. port. It must be kept in

confinement for at least 30 days after the date of vaccination.

(3) When a dog is admitted under paragraph (c)(2) of this section, the Director shall notify the health department or other appropriate agency having jurisdiction at the point of destination and shall provide the address of the specified place of confinement and other pertinent information to facilitate surveillance and other appropriate action.

(d) *Certification requirements.* The owner shall submit such certification regarding confinement and vaccination prescribed under this section as may be required by the Director.

(e) *Additional requirements for the importation of dogs and cats.* Dogs and cats shall be subject to such additional requirements as may be deemed necessary by the Director or to exclusion if coming from areas which the Director has determined to have high rates of rabies.

(f) *Requirements for dogs and cats in transit.* The provisions of this section shall apply to dogs and cats transported through the United States from one foreign country to another, except as provided below:

(1) Dogs and cats that appear healthy, but have been exposed to a sick or dead animal suspected of having a communicable disease, need not undergo examination or tests as provided in paragraph (b)(3) of this section if the Director determines that the conditions under which they are being transported will afford adequate protection against introduction of communicable disease.

(2) Rabies vaccination is not required for dogs that are transported by aircraft or ship and retained in custody of the carrier under conditions that would prevent transmission of rabies.

(g) *Disposal of excluded dogs and cats.* A dog or cat excluded from the United States under the regulations in this part shall be exported or destroyed. Pending exportation, it shall be detained at the owner's expense in the custody of the U.S. Customs Service at the U.S. port.

(Approved by the Office of Management and Budget under control number 0920–0134)

§ 71.52 Turtles, tortoises, and terrapins.

(a) *Definitions.*

As used in this section the term:

Turtles includes all animals commonly known as turtles, tortoises, terrapins, and all other animals of the order *Testudinata*, class *Reptilia*, except marine species (Families *Dermochelidae* and *Cheloniidae*).

(b) *Importation; general prohibition.* Except as otherwise provided in this section, live turtles with a carapace length of less than 4 inches and viable turtle eggs may not be imported into the United States.

(c) *Exceptions.* (1) Live turtles with a carapace length of less than 4 inches and viable turtle eggs may be imported into the United States, provided that such importation is not in connection with a business, and the importation is limited to lots of fewer than seven live turtles or fewer than seven viable turtle eggs, or any combinations of such turtles and turtle eggs totaling fewer than seven, for any entry.

(2) Seven or more live turtles with a carapace length of less than 4 inches, or seven or more viable turtle eggs or any combination of turtles and turtle eggs totaling seven or more, may be imported into the United States for bona fide scientific or educational purposes or for exhibition when accompanied by a permit issued by the Director.

(3) The requirements in paragraphs (c)(1) and (c)(2) of this section shall not apply to the eggs of marine turtles excluded from these regulations under § 71.52(a).

(d) *Application for permits.* Applications for permits to import turtles, as set forth in paragraph (c)(2) of this section, shall be made by letter to the Director, and shall contain, identify, or describe, the name and address of the applicant, the number of specimens, and the common and scientific names of each species to be imported, the holding facilities, the intended use of the turtles following their importation, the precautions to be undertaken to prevent infection of members of the public with *Salmonella* and *Arizona* bacteria, and any other information and assurances the Director may require.

(e) *Criteria for issuance of permits.* A permit may be issued upon a determination that the holder of the permit will isolate or otherwise confine the turtles and will take such other precautions as may be determined by the Director to be necessary to prevent infection of members of the public with *Salmonella* and *Arizona* bacteria and on condition that the holder of the permit will provide such reports as the Director may require.

(f) *Interstate Regulations.* Upon admission at a U.S. Port, turtles and viable turtle eggs become subject to Food and Drug Administration Regulations (21 CFR 1240.62) regarding general prohibition.

(g) *Other permits.* Permits to import certain species of turtles may be required under other Federal regulations (50 CFR parts 17 and 23) protecting such species.

(Approved by the Office of Management and Budget under control number 0920–0134)

§ 71.53 Nonhuman primates.

(a) *Definitions.*

As used in this section the term:

Importer means any person or corporation, partnership, or other organization, receiving live nonhuman primates from a foreign country within a period of 31 days, beginning with the importation date, whether or not the primates were held for part of the period at another location. The term *importer* includes the original importer and any other person or organization receiving imported primates within the 31-day period.

Nonhuman primates means all nonhuman members of the Order Primates, including, but not limited to, animals commonly known as monkeys, chimpanzees, orangutans, gorillas, gibbons, apes, baboons, marmosets, tamarin, lemurs, and lorises.

(b) *General prohibition.* No person or organization may import live nonhuman primates into the United States unless registered as an importer in accordance with applicable provisions of this section.

(c) *Uses for which nonhuman primates may be imported and distributed.* Live nonhuman primates may be imported into the United States and sold, resold, or otherwise distributed only for bona fide scientific, educational, or exhibition purposes. The importation of nonhuman primates for use in breeding colonies is also permitted provided that all offspring will be used only for scientific, educational, or exhibition purposes. The maintenance of nonhuman primates as pets, hobby, or an avocation with occasional display to the general public is not a permissible use.

(d) *Registration of importers.* (1) Importers of nonhuman primates shall register with the Director in a manner prescribed by the Director.

(2) Documentary evidence that an importer will use all nonhuman primates solely for the permitted purposes is required.

(3) Registration shall inlcude certification that the nonhuman primates will not be shipped, sold, or otherwise transferred to other persons or organizations without adequate proof that the primates will be used only for the permitted purposes.

(4) Registration shall be for 2 years, effective the date the application for registration is approved by the Director.

(5) Registration may be renewed by filing a registration application form with the Director not less than 30 days nor more than 60 days before expiration of the current registration.

(e) *Recordkeeping and reporting requirement for registered importers.* (1) Importers shall maintain records on each shipment of imported nonhuman primates received. The record on each shipment shall include the number of primates received, species, country of origin, date of importation, the number of primates in the shipment that die within 90 days after receipt, and cause(s) of deaths. If any primates in the shipment are sold or otherwise distributed within 90 days after receipt, the record shall include the number of primates in each shipment or sale, the dates of each shipment or sale, and the identity of the recipients. In addition, the record shall contain copies of documents that were presented to the importer to establish that the recipient would use the primates solely for the permitted purposes. The records shall be maintained in an organized manner in a central location at or in close

proximity to the importer's primate holding facility. The records shall be maintained for a period of 3 years and shall be available for inspection by the Director at any time.

(2) Importers shall report to the Director by telephone within 24 hours the occurrence of any illness in nonhuman primates that is suspected of being yellow fever, monkeypox, or Marburg/Ebola disease.

(3) Importers also shall report to the Director by telephone within 24 hours the occurrence of illness in any member of their staff suspected of having an infectious disease acquired from nonhuman primates.

(f) *Disease control measures.* Upon receipt of evidence of exposure of nonhuman primates to a communicable disease that may constitute a threat to public health, the Director may provide for or require examination, treatment, detention, isolation, seizure, or destruction of exposed animals. Any measures required shall be at the owner's expense.

(g) *Disposal of excluded nonhuman primates.* Nonhuman primate(s) excluded from the United States by provisions of this section shall, at the owner's option and expense, be exported, destroyed, or given to a scientific, educational, or exhibition facility under arrangements approved by the Director. If the owner fails to dispose of the nonhuman primate by one of the approved options or fails to select a method of disposal within 7 days, the Director will select the method of disposal. Pending disposal, the nonhuman primate(s) shall be detained at the owner's expense in custody of the U.S. Customs Service at the U.S. port.

(h) *Revocation of an importer's registration.* (1) An importer's registration may be revoked by the Director, upon notice to the importer holding such registration, if the Director determines that the importer has failed to comply with any applicable provisions of this section. The notice shall contain a statement of the grounds upon which the revocation is based.

(2) The importer may file an answer within 20 days after receipt of the notice. Answers shall admit or deny specifically, and in detail, each allegation in the notice. Allegations in the notice not denied by answer shall be deemed admitted. Matters alleged as affirmative defenses shall be separately stated and numbered. Failure of the importer to file an answer within 20 days after receipt of the notice may be deemed an admission of all allegations of fact recited in the notice.

(3) The importer shall be entitled to a hearing with respect to the revocation upon filing a written request, either in the answer or in a separate document, with the Director within 20 days after the effective date of revocation. Failure to request a hearing shall be deemed a waiver of hearing and as consent to the submission of the case to the Director for decision based on the written record. The failure both to file an answer and to request a hearing shall be deemed to constitute consent to the making of a decision on the basis of available information.

(4) As soon as practicable after the completion of any hearing conducted pursuant to the provisions of this section, the Director shall render a final decision. A copy of such decision shall be served on the importer.

(5) An importer's registration which has been revoked may be reinstated by the Director upon inspection, examination of records, conference with the importer, and receipt of information and assurances of compliance with the requirements of this section.

(i) *Other permits.* In addition to the requirements under this section, permits to import certain species of nonhuman primates may also be required under other Federal regulations (50 CFR parts 17 and 23) protecting such species.

(Approved by the Office of Management and Budget under control number 0920–0134)

§ 71.54 Etiological agents, hosts, and vectors.

(a) A person may not import into the United States, nor distribute after importation, any etiological agent or any arthropod or other animal host or vector of human disease, or any exotic living arthropod or other animal capable of being a host or vector of human disease unless accompanied by a permit issued by the Director.

(b) Any import coming within the provisions of this section will not be

released from custody prior to receipt by the District Director of the U.S. Customs Service of a permit issued by the Director.

§ 71.55 Dead bodies.

The remains of a person who died of a communicable disease listed in § 71.32(b) may not be brought into a U.S. port unless the body is (a) properly embalmed and placed in a hermetically sealed casket, (b) cremated, or (c) accompanied by a permit issued by the Director.

§ 71.56 African rodents and other animals that may carry the monkeypox virus.

(a) *What actions are prohibited? What animals are affected?* (1) Except as provided in paragraphs (a)(2) and (a)(3) of this section,

(i) You must not import or attempt to import any rodents, whether dead or alive, that were obtained, directly or indirectly, from Africa, or whose native habitat is Africa, any products derived from such rodents, any other animal, whether dead or alive, whose importation the Director has prohibited by order, or any products derived from such animals; and

(ii) You must not prevent or attempt to prevent the Centers for Disease Control and Prevention (CDC) from causing an animal to be quarantined, re-exported, or destroyed under a written order.

(2) The prohibitions in paragraph (a)(1) of this section do not apply if you have written permission from CDC to import a rodent that was obtained, directly or indirectly, from Africa, or whose native habitat is Africa, or an animal whose importation the Director has prohibited by order.

(i) To obtain such written permission from CDC, you must send a written request to Division of Global Migration and Quarantine, National Center for Infectious Diseases, Centers for Disease Control and Prevention, 1600 Clifton Rd., Atlanta, GA 30333. You may also fax your request to the Division of Global Migration and Quarantine (using the same address in the previous sentence) at 404–498–1633.

(ii) Your request must state the reasons why you need an exemption, describe the animals involved, describe the number of animals involved, describe how the animals will be transported (including carrying containers or cages, precautions for handlers, types of vehicles used, and other procedures to minimize exposure of animals and precautions to prevent animals from escaping into the environment), describe any holding facilities, quarantine procedures, and/or veterinarian evaluation involved in the animals' movement, and explain why an exemption will not result in the spread of monkeypox within the United States. Your request must be limited to scientific, exhibition, or educational purposes.

(iii) We will respond in writing to all requests, and we also may impose conditions in granting an exemption. If we deny your request, you may appeal that denial. Your appeal must be in writing and be submitted to the CDC official whose office denied your request, and you must submit the appeal within two business days after you receive the denial. Your appeal must state the reasons for the appeal and show that there is a genuine and substantial issue of fact in dispute. We will issue a written response to the appeal, which shall constitute final agency action.

(3) The prohibitions in paragraph (a) of this section do not apply to products derived from rodents that were obtained, directly or indirectly, from Africa, or whose native habitat is Africa, or products derived from any other animal whose importation the Director has prohibited by order if such products have been properly processed to render them noninfectious so that they pose no risk of transmitting or carrying the monkeypox virus. Such products include, but are not limited to, fully taxidermied animals and completely finished trophies; and they may be imported without written permission from CDC.

(b) *What actions can CDC take?* (1) To prevent the monkeypox virus from spreading and becoming established in the United States, we may, in addition to any other authorities under this part:

(i) Issue an order causing an animal to be placed in quarantine,

(ii) Issue an order causing an animal to be re-exported,

(iii) Issue an order causing an animal to be destroyed, or

(iv) Take any other action necessary to prevent the spread of the monkeypox virus.

(2) Any order causing an animal to be quarantined, re-exported, or destroyed will be in writing.

(c) *How do I appeal an order?* If you received a written order to quarantine or re-export an animal or to cause an animal to be destroyed, you may appeal that order. Your appeal must be in writing and be submitted to the CDC official whose office issued the order, and you must submit the appeal within 2 business days after you receive the order. Your appeal must state the reasons for the appeal and show that there is a genuine and substantial issue of fact in dispute. We will issue a written response to the appeal, which shall constitute final agency action.

[68 FR 62369, Nov. 4, 2003]

PART 72 [RESERVED]

PART 73—SELECT AGENTS AND TOXINS

Sec.

73.1 Definitions.
73.2 Purpose and scope.
73.3 HHS select agents and toxins.
73.4 Overlap select agents and toxins.
73.5 Exemptions for HHS select agents and toxins.
73.6 Exemptions for overlap select agents and toxins.
73.7 Registration and related security risk assessments.
73.8 Denial, revocation, or suspension of registration.
73.9 Responsible Official.
73.10 Restricting access to select agents and toxins; security risk assessments.
73.11 Security.
73.12 Biosafety.
73.13 Restricted experiments.
73.14 Incident response.
73.15 Training.
73.16 Transfers.
73.17 Records.
73.18 Inspections.
73.19 Notification of theft, loss, or release.
73.20 Administrative review.
73.21 Civil money penalties.

AUTHORITY: 42 U.S.C. 262a; sections 201–204, 221 and 231 of Title II of Public Law 107–188, 116 Stat. 637 (42 U.S.C. 262a).

SOURCE: 70 FR 13316, Mar. 18, 2005, unless otherwise noted.

§ 73.1 Definitions.

For purposes of this part:

Administrator means the Administrator, Animal and Plant Health Inspection Service, or any person authorized to act for the Administrator.

Animal and Plant Health Inspection Service (APHIS) means the Animal and Plant Health Inspection Service of the U.S. Department of Agriculture.

Attorney General means the Attorney General of the United States or any person authorized to act for the Attorney General.

Biological agent means any microorganism (including, but not limited to, bacteria, viruses, fungi, rickettsiae, or protozoa), or infectious substance, or any naturally occurring, bioengineered, or synthesized component of any such microorganism or infectious substance, capable of causing death, disease, or other biological malfunction in a human, an animal, a plant, or another living organism; deterioration of food, water, equipment, supplies, or material of any kind; or deleterious alteration of the environment.

CDC means Centers for Disease Control and Prevention of the Department of Health and Human Services.

Diagnosis means the analysis of specimens for the purpose of identifying or confirming the presence or characteristics of a select agent or toxin provided that such analysis is directly related to protecting the public health or safety, animal health or animal products, or plant health or plant products.

Entity means any government agency (Federal, State, or local), academic institution, corporation, company, partnership, society, association, firm, sole proprietorship, or other legal entity.

HHS means the Department of Health and Human Services.

HHS Secretary means the Secretary of the Department of Health and Human Services or his or her designee, unless otherwise specified.

HHS select agent and/or toxin means a biological agent or toxin included in § 73.3.

Overlap select agent and/or toxin means a biological agent or toxin listed in § 73.4 and 9 CFR part 121.4.

Principal investigator means the one individual who is designated by the entity to direct a project or program and who is responsible to the entity for the scientific and technical direction of that project or program.

Proficiency testing means the process of determining the competency of an individual or laboratory to perform a specified test or procedure.

Responsible Official means the individual designated by an entity with the authority and control to ensure compliance with the regulations in this part.

Select agent and/or toxin means unless otherwise specified, all of the biological agents or toxins listed in §§ 73.3 and 73.4.

Specimen means samples of material from humans, animals, plants or the environment or isolates or cultures from such samples for the diagnosis, verification, or proficiency testing.

State means any of the several States of the United States, the Commonwealth of the Northern Mariana Islands, the Commonwealth of Puerto Rico, the District of Columbia, Guam, the Virgin Islands of the United States, or any other territory or possession of the United States.

Toxin means the toxic material or product of plants, animals, microorganisms (including, but not limited to, bacteria, viruses, fungi, rickettsiae, or protozoa), or infectious substances, or a recombinant or synthesized molecule, whatever their origin and method of production, and includes any poisonous substance or biological product that may be engineered as a result of biotechnology, produced by a living organism; or any poisonous isomer or biological product, homolog, or derivative of such a substance.

United States means all of the States.

USDA means the United States Department of Agriculture.

Verification means the demonstration of obtaining established performance (e.g., accuracy, precision, and the analytical sensitivity and specificity) specifications for any procedure used for diagnosis.

§ 73.2 Purpose and scope.

This part implements the provisions of the Public Health Security and Bioterrorism Preparedness and Response Act of 2002 setting forth the requirements for possession, use, and transfer of select agents and toxins. The biological agents and toxins listed in this part have the potential to pose a severe threat to public health and safety, to animal health, or to animal products. Overlap select agents and toxins are subject to regulation by both CDC and APHIS.

§ 73.3 HHS select agents and toxins.

(a) Except for exclusions under paragraphs (d) and (e) of this section, the HHS Secretary has determined that the biological agents and toxins listed in this section have the potential to pose a severe threat to public health and safety.

(b) HHS select agents and toxins:

Abrin
Botulinum neurotoxins
Botulinum neurotoxin producing species of *Clostridium*
Cercopithecine herpesvirus 1 (Herpes B virus)
Clostridium perfringens epsilon toxin
Coccidioides posadasii/Coccidioides immitis
Conotoxins
Coxiella burnetii
Crimean-Congo haemorrhagic fever virus
Diacetoxyscirpenol
Eastern Equine Encephalitis virus
Ebola viruses
Francisella tularensis
Lassa fever virus
Marburg virus
Monkeypox virus
Reconstructed replication competent forms of the 1918 pandemic influenza virus containing any portion of the coding regions of all eight gene segments (Reconstructed 1918 Influenza virus)
Ricin
Rickettsia prowazekii
Rickettsia rickettsii
Saxitoxin
Shiga-like ribosome inactivating proteins
Shigatoxin
South American Haemorrhagic Fever viruses (Junin, Machupo, Sabia, Flexal, Guanarito)
Staphylococcal enterotoxins
T–2 toxin
Tetrodotoxin
Tick-borne encephalitis complex (flavi) viruses (Central European Tick-borne encephalitis, Far Eastern Tick-borne encephalitis [Russian Spring and Summer encephalitis, Kyasanur Forest disease, Omsk Hemorrhagic Fever])

Variola major virus (Smallpox virus) and Variola minor virus (Alastrim)
Yersinia pestis

(c) Genetic Elements, Recombinant Nucleic Acids, and Recombinant Organisms:

(1) Nucleic acids that can produce infectious forms of any of the select agent viruses listed in paragraph (b) of this section.

(2) Recombinant nucleic acids that encode for the functional form(s) of any of the toxins listed in paragraph (b) of this section if the nucleic acids:

(i) Can be expressed *in vivo* or *in vitro*, or

(ii) Are in a vector or recombinant host genome and can be expressed *in vivo* or *in vitro*.

(3) HHS select agents and toxins listed in paragraph (b) of this section that have been genetically modified.

(d) HHS select agents or toxins that meet any of the following criteria are excluded from the requirements of this part:

(1) Any HHS select agent or toxin that is in its naturally occurring environment provided the select agent or toxin has not been intentionally introduced, cultivated, collected, or otherwise extracted from its natural source.

(2) Non-viable HHS select agents or nonfunctional HHS toxins.

(3) HHS toxins under the control of a principal investigator, treating physician or veterinarian, or commercial manufacturer or distributor, if the aggregate amount does not, at any time, exceed the following amounts: 100 mg of Abrin; 0.5 mg of Botulinum neurotoxins; 100 mg of *Clostridium perfringens* epsilon toxin; 100 mg of Conotoxins; 1,000 mg of Diacetoxyscirpenol; 100 mg of Ricin; 100 mg of Saxitoxin; 100 mg of Shiga-like ribosome inactivating proteins; 100 mg of Shigatoxin; 5 mg of Staphylococcal enterotoxins; 1,000 mg of T–2 toxin; or 100 mg of Tetrodotoxin.

(e) An attenuated strain of a HHS select agent or toxin may be excluded from the requirements of this part based upon a determination that the attenuated strain does not pose a severe threat to public health and safety.

(1) To apply for an exclusion, an individual or entity must submit a written request and supporting scientific information. A written decision granting or denying the request will be issued. An exclusion will be effective upon notification to the applicant. Exclusions will be published periodically in the notice section of the FEDERAL REGISTER and will be listed on the CDC Web site at *http://www.cdc.gov/*.

(2) If an excluded attenuated strain is subjected to any manipulation that restores or enhances its virulence, the resulting select agent or toxin will be subject to the requirements of this part.

(3) An individual or entity may make a written request to the HHS Secretary for reconsideration of a decision denying an exclusion application. The written request for reconsideration must state the facts and reasoning upon which the individual or entity relies to show the decision was incorrect. The HHS Secretary will grant or deny the request for reconsideration as promptly as circumstances allow and will state, in writing, the reasons for the decision.

(f) Any HHS select agent or toxin seized by a Federal law enforcement agency will be excluded from the requirements of this part during the period between seizure of the select agent or toxin and the transfer or destruction of such agent or toxin provided that:

(1) As soon as practicable, the Federal law enforcement agency transfers the seized select agent or toxin to an entity eligible to receive such agent or toxin or destroys the agent or toxin by a recognized sterilization or inactivation process,

(2) The Federal law enforcement agency safeguards and secures the seized select agent or toxin against theft, loss, or release, and reports any theft, loss, or release of such agent or toxin, and

(3) The Federal law enforcement agency reports the seizure of the select agent or toxin to CDC or APHIS.

(i) The seizure of Botulinum neurotoxins, Ebola viruses, *Francisella tularensis*, Lassa fever virus, Marburg virus, South American Haemorrhagic Fever virus (Junin, Machupo, Sabia, Flexal, Guanarito), Variola major virus (Smallpox virus), Variola minor (Alastrim), or *Yersinia pestis* must be reported within 24 hours by telephone,

facsimile, or e-mail. This report must be followed by submission of APHIS/CDC Form 4 within seven calendar days after seizure of the select agent or toxin.

(ii) For all other HHS select agents or toxins, APHIS/CDC Form 4 must be submitted within seven calendar days after seizure of the agent or toxin.

(iii) A copy of APHIS/CDC Form 4 must be maintained for three years.

(4) The Federal law enforcement agency reports the final disposition of the select agent or toxin by submission of APHIS/CDC Form 4. A copy of the completed form must be maintained for three years.

[70 FR 13316, Mar. 18, 2005, as amended at 70 FR 61049, Oct. 20, 2005; 73 FR 61365, Oct. 16, 2008; 73 FR 64554, Oct. 30, 2008]

§ 73.4 Overlap select agents and toxins.

(a) Except for exclusions under paragraphs (d) and (e) of this section, the HHS Secretary has determined that the biological agents and toxins listed in this section have the potential to pose a severe threat to public health and safety, to animal health, or to animal products.

(b) Overlap select agents and toxins:

Bacillus anthracis
Brucella abortus
Brucella melitensis
Brucella suis
Burkholderia mallei (formerly *Pseudomonas mallei*)
Burkholderia pseudomallei (formerly *Pseudomonas pseudomallei*)
Hendra virus
Nipah virus
Rift Valley fever virus
Venezuelan Equine Encephalitis virus

(c) Genetic Elements, Recombinant Nucleic Acids, and Recombinant Organisms:

(1) Nucleic acids that can produce infectious forms of any of the overlap select agent viruses listed in paragraph (b) of this section.

(2) Recombinant nucleic acids that encode for the functional form(s) of any overlap toxins listed in paragraph (b) of this section if the nucleic acids:

(i) Can be expressed *in vivo* or *in vitro*, or

(ii) Are in a vector or recombinant host genome and can be expressed *in vivo* or *in vitro*.

(3) Overlap select agents and toxins listed in paragraph (b) of this section that have been genetically modified.

(d) Overlap select agents or toxins that meet any of the following criteria are excluded from the requirements of this part:

(1) Any overlap select agent or toxin that is in its naturally occurring environment provided that the select agent or toxin has not been intentionally introduced, cultivated, collected, or otherwise extracted from its natural source.

(2) Non-viable overlap select agents or nonfunctional overlap toxins.

(e) An attenuated strain of an overlap select agent or toxin may be excluded from the requirements of this part based upon a determination that the attenuated strain does not pose a severe threat to public health and safety, to animal health, or to animal products.

(1) To apply for an exclusion, an individual or entity must submit a written request and supporting scientific information. A written decision granting or denying the request will be issued. An exclusion will be effective upon notification to the applicant. Exclusions will be published periodically in the notice section of the FEDERAL REGISTER and will be listed on the CDC Web site at *http://www.cdc.gov/*.

(2) If an excluded attenuated strain is subjected to any manipulation that restores or enhances its virulence, the resulting overlap select agent or toxin will be subject to the requirements of this part.

(3) An individual or entity may make a written request to the HHS Secretary for reconsideration of a decision denying an exclusion application. The written request for reconsideration must state the facts and reasoning upon which the individual or entity relies to show the decision was incorrect. The HHS Secretary will grant or deny the request for reconsideration as promptly as circumstances allow and will state, in writing, the reasons for the decision.

(f) Any overlap select agent or toxin seized by a Federal law enforcement agency will be excluded from the requirements of this part during the period between seizure of the select agent

or toxin and the transfer or destruction of such agent or toxin provided that:

(1) As soon as practicable, the Federal law enforcement agency transfers the seized select agent or toxin to an entity eligible to receive such agent or toxin or destroys the agent or toxin by a recognized sterilization or inactivation process,

(2) The Federal law enforcement agency safeguards and secures the seized select agent or toxin against theft, loss, or release, and reports any theft, loss, or release of such agent or toxin, and

(3) The Federal law enforcement agency reports the seizure of the overlap select agent or toxin to CDC or APHIS.

(i) The seizure of *Bacillus anthracis, Brucella melitensis,* Hendra virus, Nipah virus, Rift Valley fever virus, or Venezuelan equine encephalitis virus must be reported within 24 hours by telephone, facsimile, or e-mail. This report must be followed by submission of APHIS/CDC Form 4 within seven calendar days after seizure of the select agent or toxin.

(ii) For all other overlap select agents or toxins, APHIS/CDC Form 4 must be submitted within seven calendar days after seizure of the select agent or toxin.

(iii) A copy of APHIS/CDC Form 4 must be maintained for three years.

(4) The Federal law enforcement agency reports the final disposition of the overlap select agent or toxin by the submission of APHIS/CDC Form 4. A copy of the completed form must be maintained for three years.

[70 FR 13316, Mar. 18, 2005, as amended at 73 FR 61366, Oct. 16, 2008]

§ 73.5 Exemptions for HHS select agents and toxins.

(a) Clinical or diagnostic laboratories and other entities that possess, use, or transfer a HHS select agent or toxin that is contained in a specimen presented for diagnosis or verification will be exempt from the requirements of this part for such agent or toxin contained in the specimen, provided that:

(1) Unless directed otherwise by the HHS Secretary, within seven calendar days after identification, the select agent or toxin is transferred in accordance with § 73.16 or destroyed on-site by a recognized sterilization or inactivation process,

(2) The select agent or toxin is secured against theft, loss, or release during the period between identification of the select agent or toxin and transfer or destruction of such agent or toxin, and any theft, loss, or release of such agent or toxin is reported, and

(3) The identification of the select agent or toxin is reported to CDC or APHIS and to other appropriate authorities when required by Federal, State, or local law.

(i) The identification of any of the following HHS select agents or toxins must be immediately reported by telephone, facsimile, or e-mail: Botulinum neurotoxins, Ebola viruses, *Francisella tularensis,* Lassa fever virus, Marburg virus, South American Haemorrhagic Fever viruses (Junin, Machupo, Sabia, Flexal, Guanarito), Variola major virus (Smallpox virus), Variola minor (Alastrim), or Yersinia pestis. This report must be followed by submission of APHIS/CDC Form 4 within seven calendar days after identification.

(ii) For all other HHS select agents or toxins, APHIS/CDC Form 4 must be submitted within seven calendar days after identification.

(iii) Less stringent reporting may be required based on extraordinary circumstances, such as a widespread outbreak.

(iv) A copy of APHIS/CDC Form 4 must be maintained for three years.

(b) Clinical or diagnostic laboratories and other entities that possess, use, or transfer a HHS select agent or toxin that is contained in a specimen presented for proficiency testing will be exempt from the requirements of this part for such agent or toxin contained in the specimen, provided that:

(1) Unless directed otherwise by the HHS Secretary, within 90 calendar days of receipt, the select agent or toxin is transferred in accordance with § 73.16 or destroyed on-site by a recognized sterilization or inactivation process,

(2) The select agent or toxin is secured against theft, loss, or release during the period between identification of the select agent or toxin and transfer or destruction of such agent or

toxin, and the theft, loss, or release of such agent or toxin is reported, and

(3) The identification of the select agent or toxin, and its derivative, is reported to CDC or APHIS and to other appropriate authorities when required by Federal, State, or local law. To report the identification of a select agent or toxin, APHIS/CDC Form 4 must be submitted within 90 calendar days of receipt of the select agent or toxin. A copy of the completed form must be maintained for three years.

(c) Unless the HHS Secretary issues an order making specific provisions of this part applicable to protect public health and safety, products that are, bear, or contain listed select agents or toxins that are cleared, approved, licensed, or registered under any of the following laws, are exempt from the provisions of this part insofar as their use meets the requirements of such laws:

(1) The Federal Food, Drug, and Cosmetic Act (21 U.S.C. 301 *et seq.*),

(2) Section 351 of the Public Health Service Act pertaining to biological products (42 U.S.C. 262),

(3) The Act commonly known as the Virus-Serum-Toxin Act (21 U.S.C. 151–159), or

(4) The Federal Insecticide, Fungicide, and Rodenticide Act (7 U.S.C. 136 *et seq.*).

(d) The HHS Secretary may exempt from the requirements of this part an investigational product that is, bears, or contains a select agent or toxin, when such product is being used in an investigation authorized under any Federal Act and additional regulation under this part is not necessary to protect public health and safety.

(1) To apply for an exemption, an individual or entity must submit a completed APHIS/CDC Form 5.

(2) The HHS Secretary shall make a determination regarding the application within 14 calendar days after receipt, provided the application meets all of the requirements of this section and the application establishes that the investigation has been authorized under the cited Act. A written decision granting or denying the request will be issued.

(3) The applicant must notify CDC or APHIS when an authorization for an investigation no longer exists. This exemption automatically terminates when such authorization is no longer in effect.

(e) The HHS Secretary may temporarily exempt an individual or entity from the requirements of this part based on a determination that the exemption is necessary to provide for the timely participation of the individual or entity in response to a domestic or foreign public health emergency. With respect to the emergency involved, the exemption may not exceed 30 calendar days, except that one extension of an additional 30 calendar days may be granted. To apply for an exemption or an extension of an exemption, an individual or entity must submit a completed APHIS/CDC Form 5 establishing the need to provide for the timely participation of the individual or entity in a response to a domestic or foreign public health emergency. A written decision granting or denying the request will be issued.

[70 FR 13316, Mar. 18, 2005, as amended at 73 FR 61366, Oct. 16, 2008]

§ 73.6 Exemptions for overlap select agents and toxins.

(a) Clinical or diagnostic laboratories and other entities that possess, use, or transfer an overlap select agent or toxin that is contained in a specimen presented for diagnosis or verification will be exempt from the requirements of this part for such agent or toxin contained in the specimen, provided that:

(1) Unless directed otherwise by the HHS Secretary or Administrator, within seven calendar days after identification, the select agent or toxin is transferred in accordance with § 73.16 or 9 CFR part 121.16 or destroyed on-site by a recognized sterilization or inactivation process,

(2) The select agent or toxin is secured against theft, loss, or release during the period between identification of the select agent or toxin and transfer or destruction of such agent or toxin, and any theft, loss, or release of such agent or toxin is reported, and

(3) The identification of the select agent or toxin is reported to CDC or APHIS and to other appropriate authorities when required by Federal, State, or local law.

(i) The identification of any of the following overlap select agents or toxins must be immediately reported by telephone, facsimile, or e-mail: *Bacillus anthracis, Brucella melitensis,* Hendra virus, Nipah virus, Rift Valley fever virus, or Venezuelan equine encephalitis virus. This report must be followed by submission of APHIS/CDC Form 4 within seven calendar days after identification.

(ii) For all other overlap select agents or toxins, APHIS/CDC Form 4 must be submitted within seven calendar days after identification.

(iii) Less stringent reporting may be required based on extraordinary circumstances, such as a widespread outbreak.

(iv) A copy of APHIS/CDC Form 4 must be maintained for three years.

(b) Clinical or diagnostic laboratories and other entities that possess, use, or transfer an overlap select agent or toxin that is contained in a specimen presented for proficiency testing will be exempt from the requirements of this part for such agent or toxin contained in the specimen, provided that:

(1) Unless directed otherwise by the HHS Secretary or Administrator, within 90 calendar days of receipt, the select agent or toxin is transferred in accordance with § 73.16 or 9 CFR part 121.16 or destroyed on-site by a recognized sterilization or inactivation process,

(2) The select agent or toxin is secured against theft, loss, or release during the period between identification of the select agent or toxin and transfer or destruction of such agent or toxin, and the theft, loss, or release of such agent or toxin is reported, and

(3) The identification of the select agent or toxin, and its derivative, is reported to CDC or APHIS and to other appropriate authorities when required by Federal, State, or local law. To report the identification of an overlap select agent or toxin, APHIS/CDC Form 4 must be submitted within 90 calendar days of receipt of the select agent or toxin. A copy of the completed form must be maintained for three years.

(c) Unless the HHS Secretary issues an order making specific provisions of this part applicable to protect public health and safety, products that are, bear, or contain listed select agents or toxins that are cleared, approved, licensed, or registered under any of the following laws, are exempt from the provisions of this part insofar as their use meets the requirements of such laws:

(1) The Federal Food, Drug, and Cosmetic Act (21 U.S.C. 301 *et seq.*),

(2) Section 351 of the Public Health Service Act pertaining to biological products (42 U.S.C. 262),

(3) The Act commonly known as the Virus-Serum-Toxin Act (21 U.S.C. 151–159), or

(4) The Federal Insecticide, Fungicide, and Rodenticide Act (7 U.S.C. 136 *et seq.*).

(d) The HHS Secretary, after consultation with Administrator, may exempt from the requirements of this part an investigational product that is, bears, or contains an overlap select agent or toxin, may be exempted when such product is being used in an investigation authorized under any Federal Act and additional regulation under this part is not necessary to protect public health and safety.

(1) To apply for an exemption, an individual or entity must submit a completed APHIS/CDC Form 5.

(2) The HHS Secretary shall make a determination regarding the application within 14 calendar days after receipt, provided the application meets all of the requirements of this section and the application establishes that the investigation has been authorized under the cited Act. A written decision granting or denying the request will be issued.

(3) The applicant must notify CDC or APHIS when an authorization for an investigation no longer exists. This exemption automatically terminates when such authorization is no longer in effect.

(e) The HHS Secretary may temporarily exempt an individual or entity from the requirements of this part based on a determination that the exemption is necessary to provide for the timely participation of the individual or entity in response to a domestic or foreign public health emergency. With respect to the emergency involved, the exemption may not exceed 30 calendar days, except that one extension of an

additional 30 calendar days may be granted. To apply for an exemption or an extension of an exemption, an individual or entity must submit a completed APHIS/CDC Form 5 establishing the need to provide for the timely participation of the individual or entity in a response to a domestic or foreign public health emergency. A written decision granting or denying the request will be issued.

(f) Upon request of the Administrator, the HHS Secretary may exempt an individual or entity from the requirements of this part, for 30 calendar days if the Administrator has granted the exemption for agricultural emergency. The HHS Secretary may extend the exemption once for an additional 30 calendar days.

[70 FR 13316, Mar. 18, 2005, as amended at 73 FR 61366, Oct. 16, 2008]

§ 73.7 Registration and related security risk assessments.

(a) Unless exempted under § 73.5, an individual or entity shall not possess, use, or transfer any HHS select agent or toxin without a certificate of registration issued by the HHS Secretary. Unless exempted under § 73.6 or 9 CFR part 121.6, an individual or entity shall not possess, use, or transfer overlap select agents or toxins, without a certificate of registration issued by the HHS Secretary and Administrator.

(b) As a condition of registration, each entity must designate an individual to be its Responsible Official. While most registrants are likely to be entities, in the event that an individual applies for and is granted a certificate of registration, the individual will be considered the Responsible Official.

(c)(1) As a condition of registration, the following must be approved by the HHS Secretary or Administrator based on a security risk assessment by the Attorney General:

(i) The individual or entity,

(ii) The Responsible Official, and

(iii) Unless otherwise exempted under this section, any individual who owns or controls the entity.

(2) Federal, State, or local governmental agencies, including public accredited academic institutions, are exempt from the security risk assessments for the entity and the individual who owns or controls such entity.

(3) An individual will be deemed to own or control an entity under the following conditions:[1]

(i) For a private institution of higher education, an individual will be deemed to own or control the entity if the individual is in a managerial or executive capacity with regard to the entity's select agents or toxins or with regard to the individuals with access to the select agents or toxins possessed, used, or transferred by the entity.

(ii) For entities other than institutions of higher education, an individual will be deemed to own or control the entity if the individual:

(A) Owns 50 percent or more of the entity, or is a holder or owner of 50 percent or more of its voting stock, or

(B) Is in a managerial or executive capacity with regard to the entity's select agents or toxins or with regard to the individuals with access to the select agents or toxins possessed, used, or transferred by the entity.

(4) An entity will be considered to be an institution of higher education if it is an institution of higher education as defined in section 101(a) of the Higher Education Act of 1965 (20 U.S.C. 1001(a)), or is an organization described in 501(c)(3) of the Internal Revenue Code of 1986, as amended (26 U.S.C. 501(c)(3)).

(5) To obtain a security risk assessment, an individual or entity must submit the information necessary to conduct a security risk assessment to the Attorney General.

(d) To apply for a certificate of registration that covers only HHS select agents or toxins, an individual or entity must submit the information requested in the registration application package (APHIS/CDC Form 1) to CDC. To apply for a certificate of registration that does not cover only HHS select agents or toxins (*i.e.*, covers at least one overlap select agent and/or toxin, or covers any combination of HHS select agents and/or toxins and USDA select agents and/or toxins), an individual or entity must submit the

[1] These conditions may apply to more than one individual.

information requested in the registration application package (APHIS/CDC Form 1) to CDC or APHIS, but not both.

(e) Prior to the issuance of a certificate of registration, the Responsible Official must promptly provide notification of any changes to the application for registration by submitting the relevant page(s) of the registration application.

(f) The issuance of a certificate of registration may be contingent upon inspection or submission of additional information, such as the security plan, biosafety plan, incident response plan, or any other documents required to be prepared under this part.

(g) A certificate of registration will be valid for one physical location (a room, a building, or a group of buildings) where the Responsible Official will be able to perform the responsibilities required in this part, for specific select agents or toxins, and for specific activities.

(h) A certificate of registration may be amended to reflect changes in circumstances (e.g., replacement of the Responsible Official or other personnel changes, changes in ownership or control of the entity, changes in the activities involving any select agents or toxins, or the addition or removal of select agents or toxins).

(1) Prior to any change, the Responsible Official must apply for an amendment to a certificate of registration by submitting the relevant page(s) of the registration application.

(2) The Responsible Official will be notified in writing if an application to amend a certificate of registration has been approved. Approval of the amendment may be contingent upon an inspection or submission of additional information, such as the security plan, biosafety plan, incident response plan, or any other documents required to be prepared under this part.

(3) No change may be made without such approval.

(i) An entity must immediately notify CDC or APHIS if it loses the services of its Responsible Official. In the event that an entity loses the services of its Responsible Official, an entity may continue to possess or use select agents or toxins only if it appoints as the Responsible Official another individual who has been approved by the HHS Secretary or Administrator following a security risk assessment by the Attorney General and who meets the requirements of this part.

(j) A certificate of registration will be terminated upon the written request of the entity if the entity no longer possesses or uses any select agents or toxins and no longer wishes to be registered.

(k) A certificate of registration will be valid for a maximum of three years.

§ 73.8 Denial, revocation, or suspension of registration.

(a) An application may be denied or a certificate of registration revoked or suspended if:

(1) The individual or entity, the Responsible Official, or an individual who owns or controls the entity is within any of the categories described in 18 U.S.C. 175b,

(2) The individual or entity, the Responsible Official, or an individual who owns or controls the entity as reasonably suspected by any Federal law enforcement or intelligence agency of:

(i) Committing a crime specified in 18 U.S.C. 2332b(g)(5),

(ii) Knowing involvement with an organization that engages in domestic or international terrorism (as defined in 18 U.S.C. 2331) or with any other organization that engages in intentional crimes of violence, or

(iii) Being an agent of a foreign power (as defined in 50 U.S.C. 1801).

(3) The individual or entity does not meet the requirements of this part, or

(4) It is determined that such action is necessary to protect public health and safety.

(b) Upon revocation or suspension of a certificate of registration, the individual or entity must:

(1) Immediately stop all use of each select agent or toxin covered by the revocation or suspension order,

(2) Immediately safeguard and secure each select agent or toxin covered by the revocation or suspension order from theft, loss, or release, and

(3) Comply with all disposition instructions issued by the HHS Secretary for the select agent or toxin covered by the revocation or suspension.

(c) Denial of an application for registration and revocation of registration may be appealed under § 73.20. However, any denial of an application for registration or revocation of a certificate of registration will remain in effect until a final agency decision has been rendered.

§ 73.9 Responsible Official.

(a) An individual or entity required to register under this part must designate an individual to be the Responsible Official. The Responsible Official must:

(1) Be approved by the HHS Secretary or Administrator following a security risk assessment by the Attorney General,

(2) Be familiar with the requirements of this part,

(3) Have authority and responsibility to act on behalf of the entity,

(4) Ensure compliance with the requirements of this part, and

(5) Ensure that annual inspections are conducted for each laboratory where select agents or toxins are stored or used in order to determine compliance with the requirements of this part. The results of each inspection must be documented, and any deficiencies identified during an inspection must be corrected.

(b) An entity may designate one or more individuals to be an alternate Responsible Official, who may act for the Responsible Official in his/her absence. These individuals must have the authority and control to ensure compliance with the regulations when acting as the Responsible Official.

(c) The Responsible Official must report the identification and final disposition of any select agent or toxin contained in a specimen presented for diagnosis or verification.

(1) The identification of any of the following select agents or toxins must be immediately reported by telephone, facsimile, or e-mail: *Bacillus anthracis*, Botulinum neurotoxins, *Brucella melitensis*, *Francisella tularensis*, Ebola viruses, Hendra virus, Marburg virus, Lassa fever virus, Nipah virus, Rift Valley fever virus, South American Haemorrhagic Fever viruses (Junin, Machupo, Sabia, Flexal, Guanarito), Variola major virus (Smallpox virus), Variola minor (Alastrim), Venezuelan equine encephalitis virus, or *Yersinia pestis*. The final disposition of the agent or toxin must be reported by submission of APHIS/CDC Form 4 within seven calendar days after identification. A copy of the completed form must be maintained for three years.

(2) To report the identification and final disposition of any other select agent or toxin, APHIS/CDC Form 4 must be submitted within seven calendar days after identification. A copy of the completed form must be maintained for three years.

(3) Less stringent reporting may be required based on extraordinary circumstances, such as a widespread outbreak.

(d) The Responsible Official must report the identification and final disposition of any select agent or toxin contained in a specimen presented for proficiency testing. To report the identification and final disposition of a select agent or toxin, APHIS/CDC Form 4 must be submitted within 90 calendar days of receipt of the agent or toxin. A copy of the completed form must be maintained for three years.

§ 73.10 Restricting access to select agents and toxins; security risk assessments.

(a) An individual or entity required to register under this part may not provide an individual access to a select agent or toxin, and an individual may not access a select agent or toxin, unless the individual is approved by the HHS Secretary or Administrator, following a security risk assessment by the Attorney General.

(b) An individual will be deemed to have access at any point in time if the individual has possession of a select agent or toxin (e.g., ability to carry, use, or manipulate) or the ability to gain possession of a select agent or toxin.

(c) Each individual with access to select agents or toxins must have the appropriate education, training, and/or experience to handle or use such agents or toxins.

(d) To apply for access approval, each individual must submit the information necessary to conduct a security

risk assessment to the Attorney General.

(e) An individual's security risk assessment may be expedited upon written request by the Responsible Official and a showing of good cause (e.g., public health or agricultural emergencies, national security, or a short term visit by a prominent researcher). A written decision granting or denying the request will be issued.

(f) An individual's access approval will be denied or revoked if the individual is within any of the categories described in 18 U.S.C. 175b,

(g) An individual's access approval may be denied, limited, or revoked if:

(1) The individual is reasonably suspected by any Federal law enforcement or intelligence agency of committing a crime specified in 18 U.S.C. 2332b(g)(5), knowing involvement with an organization that engages in domestic or international terrorism (as defined in 18 U.S.C. 2331) or with any other organization that engages in intentional crimes of violence, or being an agent of a foreign power (as defined in 50 U.S.C. 1801), or

(2) It is determined such action is necessary to protect public health and safety.

(h) An individual may appeal the HHS Secretary's decision to deny, limit, or revoke access approval under § 73.20.

(i) Access approval is valid for a maximum of five years.

(j) The Responsible Official must immediately notify CDC or APHIS when an individual's access to select agents or toxins is terminated by the entity and the reasons therefore.

§ 73.11 Security.

(a) An individual or entity required to register under this part must develop and implement a written security plan. The security plan must be sufficient to safeguard the select agent or toxin against unauthorized access, theft, loss, or release.

(b) The security plan must be designed according to a site-specific risk assessment and must provide graded protection in accordance with the risk of the select agent or toxin, given its intended use. The security plan must be submitted upon request.

(c) The security plan must:

(1) Describe procedures for physical security, inventory control, and information systems control,

(2) Contain provisions for the control of access to select agents and toxins,

(3) Contain provisions for routine cleaning, maintenance, and repairs,

(4) Establish procedures for removing unauthorized or suspicious persons,

(5) Describe procedures for addressing loss or compromise of keys, passwords, combinations, etc. and protocols for changing access numbers or locks following staff changes,

(6) Contain procedures for reporting unauthorized or suspicious persons or activities, loss or theft of select agents or toxins, release of select agents or toxins, or alteration of inventory records, and

(7) Contain provisions for ensuring that all individuals with access approval from the HHS Secretary or Administrator understand and comply with the security procedures.

(d) An individual or entity must adhere to the following security requirements or implement measures to achieve an equivalent or greater level of security:

(1) Allow access only to individuals with access approval from the HHS Secretary or Administrator,

(2) Allow individuals not approved for access from the HHS Secretary or Administrator to conduct routine cleaning, maintenance, repairs, or other activities not related to select agents or toxins only when continuously escorted by an approved individual,

(3) Provide for the control of select agents and toxins by requiring freezers, refrigerators, cabinets, and other containers where select agents or toxins are stored to be secured against unauthorized access (e.g., card access system, lock boxes),

(4) Inspect all suspicious packages before they are brought into or removed from the area where select agents or toxins are used or stored,

(5) Establish a protocol for intra-entity transfers under the supervision of an individual with access approval from the HHS Secretary or Administrator, including chain-of-custody documents and provisions for safeguarding against theft, loss, or release,

(6) Require that individuals with access approval from the HHS Secretary or Administrator refrain from sharing with any other person their unique means of accessing a select agent or toxin (e.g., keycards or passwords),

(7) Require that individuals with access approval from the HHS Secretary or Administrator immediately report any of the following to the Responsible Official:

(i) Any loss or compromise of keys, passwords, combination, etc.,

(ii) Any suspicious persons or activities,

(iii) Any loss or theft of select agents or toxins,

(iv) Any release of a select agent or toxin, and

(v) Any sign that inventory or use records for select agents or toxins have been altered or otherwise compromised, and

(8) Separate areas where select agents and toxins are stored or used from the public areas of the building.

(e) In developing a security plan, an entity or individual should consider, the document entitled ''Laboratory Security and Emergency Response Guidance for Laboratories Working with Select Agents. Morbidity and Mortality Weekly Report December 6, 2002; 51:RR–19:1–6.'' The document is available on the Internet at: *http://www.cdc.gov/mmwr*.

(f) The plan must be reviewed annually and revised as necessary. Drills or exercises must be conducted at least annually to test and evaluate the effectiveness of the plan. The plan must be reviewed and revised, as necessary, after any drill or exercise and after any incident.

§ 73.12 Biosafety.

(a) An individual or entity required to register under this part must develop and implement a written biosafety plan that is commensurate with the risk of the agent or toxin, given its intended use. The biosafety plan must contain sufficient information and documentation to describe the biosafety and containment procedures.

(b) The biosafety and containment procedures must be sufficient to contain the select agent or toxin (e.g., physical structure and features of the entity, and operational and procedural safeguards).

(c) In developing a biosafety plan, an individual or entity should consider:

(1) The CDC/NIH publication, ''Biosafety in Microbiological and Biomedical Laboratories'', including all appendices. Copies may be obtained from the Superintendent of Documents, U.S. Government Printing Office, Post Office Box 371954, Pittsburgh, Pennsylvania, 75250–7954 or from the CDC Web site at *http://www.cdc.gov/*. Copies may be inspected at the Centers for Disease Control and Prevention, 1600 Clifton Road, Mail Stop E–79, Atlanta, Georgia.

(2) The Occupational Safety and Health Administration (OSHA) regulations in 29 CFR parts 1910.1200 and 1910.1450.

(3) The ''NIH Guidelines for Research Involving Recombinant DNA Molecules,'' (NIH Guidelines). Copies may be obtained from the Centers for Disease Control and Prevention, 1600 Clifton Road, Mail Stop E–79, Atlanta, Georgia, 30333 or from the CDC Web site at *http://www.cdc.gov/*. Copies may be inspected at the Centers for Disease Control and Prevention, 1600 Clifton Road, Mail Stop E–79, Atlanta, Georgia.

(d) The plan must be reviewed annually and revised as necessary. Drills or exercises must be conducted at least annually to test and evaluate the effectiveness of the plan. The plan must be reviewed and revised, as necessary, after any drill or exercise and after any incident.

§ 73.13 Restricted experiments.

(a) An individual or entity may not conduct a restricted experiment with a HHS select agent or toxin unless approved by and conducted in accordance with any conditions prescribed by the HHS Secretary. In addition, an individual or entity may not conduct a restricted experiment with an overlap select agent or toxin unless approved by and conducted in accordance with any conditions prescribed by the HHS Secretary, after consultation with Administrator.

(b) Restricted experiments:

(1) Experiments utilizing recombinant DNA that involve the deliberate

transfer of a drug resistance trait to select agents that are not known to acquire the trait naturally, if such acquisition could compromise the use of the drug to control disease agents in humans, veterinary medicine, or agriculture.

(2) Experiments involving the deliberate formation of recombinant DNA containing genes for the biosynthesis of select toxins lethal for vertebrates at an LD_{50} < 100 ng/kg body weight.

(c) The HHS Secretary may revoke approval to conduct any of the experiments in paragraph (b) of this section, or revoke or suspend a certificate of registration, if the individual or entity fails to comply with the requirements of this part.

(d) To apply for approval to conduct any of the experiments in paragraph (a) of this section, an individual or entity must submit a written request and supporting scientific information. A written decision granting or denying the request will be issued.

§ 73.14 Incident response.

(a) An individual or entity required to register under this part must develop and implement a written incident response plan.[2] The incident response plan must be coordinated with any entity-wide plans, kept in the workplace, and available to employees for review.

(b) The incident response plan must fully describe the entity's response procedures for the theft, loss, or release of a select agent or toxin, inventory discrepancies, security breaches (including information systems), severe weather and other natural disasters, workplace violence, bomb threats, suspicious packages, and emergencies such as fire, gas leak, explosion, power outage, etc. The response procedures must account for hazards associated with the select agent and toxin and appropriate actions to contain such select agent or toxin.

(c) The incident response plan must also contain the following information:

(1) The name and contact information (e.g., home and work) for the individual or entity (e.g., responsible official, alternate responsible official(s), biosafety officer, etc.),

(2) The name and contact information for the building owner and/or manager, where applicable,

(3) The name and contact information for tenant offices, where applicable,

(4) The name and contact information for the physical security official for the building, where applicable,

(5) Personnel roles and lines of authority and communication,

(6) Planning and coordination with local emergency responders,

(7) Procedures to be followed by employees performing rescue or medical duties,

(8) Emergency medical treatment and first aid,

(9) A list of personal protective and emergency equipment, and their locations,

(10) Site security and control,

(11) Procedures for emergency evacuation, including type of evacuation, exit route assignments, safe distances, and places of refuge, and

(12) Decontamination procedures.

(d) The plan must be reviewed annually and revised as necessary. Drills or exercises must be conducted at least annually to test and evaluate the effectiveness of the plan. The plan must be reviewed and revised, as necessary, after any drill or exercise and after any incident.

§ 73.15 Training.

(a) An individual or entity required to register under this part must provide information and training on biosafety and security to each individual with access approval from the HHS Secretary or Administrator before he/she has such access.[3] In addition, an individual or entity must provide information and training on biosafety and security to each individual not approved for access from the HHS Secretary or Administrator before he/she works in or visits areas where select

[2] Nothing in this section is meant to supersede or preempt incident response requirements imposed by other statutes or regulations.

[3] The training need not duplicate training provided under the OSHA Bloodborne Pathogen Standard set forth at 29 CFR 1910.1030.

agents or toxins are handled or stored (e.g., laboratories, growth chambers, animal rooms, greenhouses, storage areas, etc.). The training must address the particular needs of the individual, the work they will do, and the risks posed by the select agents or toxins.

(b) Refresher training must be provided annually.

(c) A record of the training provided to each individual must be maintained. The record must include the name of the individual, the date of the training, a description of the training provided, and the means used to verify that the employee understood the training.

§ 73.16 Transfers.

(a) Except as provided in paragraphs (c) and (d) of this section, a select agent or toxin may only be transferred to individuals or entities registered to possess, use, or transfer that agent or toxin. A select agent or toxin may only be transferred under the conditions of this section and must be authorized by CDC or APHIS prior to the transfer.[4]

(b) A transfer may be authorized if:

(1) The sender:

(i) Has at the time of transfer a certificate of registration that covers the particular select agent or toxin to be transferred and meets all requirements in this part,

(ii) Meets the exemption requirements for the particular select agent or toxin to be transferred, or

(iii) Is transferring the select agent or toxin from outside the United States and meets all import requirements.

(2) At the time of transfer, the recipient has a certificate of registration that includes the particular select agent or toxin to be transferred and meets all of the requirements of this part.

(c) A select agent or toxin that is contained in a specimen for proficiency testing may be transferred without prior authorization from CDC or APHIS provided that, at least seven calendar days prior to the transfer, the sender reports to CDC or APHIS the select agent or toxin to be transferred and the name and address of the recipient.

(d) On a case-by-case basis, the HHS Secretary may authorize a transfer of a select agent or toxin, not otherwise eligible for transfer under this part under conditions prescribed by the HHS Secretary.

(e) To obtain authorization for transfer, APHIS/CDC Form 2 must be submitted.

(f) The recipient must submit a completed APHIS/CDC Form 2 within two business days of receipt of a select agent or toxin.

(g) The recipient must immediately notify CDC or APHIS if the select agent or toxin has not been received within 48 hours after the expected delivery time, or if the package containing select agents or toxins has been damaged to the extent that a release of the select agent or toxin may have occurred.

(h) An authorization for a transfer shall be valid only for 30 calendar days after issuance, except that such an authorization becomes immediately null and void if any facts supporting the authorization change (e.g., change in the certificate of registration for the sender or recipient, change in the application for transfer).

(i) The sender must comply with all applicable laws concerning packaging and shipping.

§ 73.17 Records.

(a) An individual or entity required to register under this part must maintain complete records relating to the activities covered by this part. Such records must include:

(1) Accurate, current inventory for each select agent (including viral genetic elements, recombinant nucleic acids, and recombinant organisms) held in long-term storage (placement in a system designed to ensure viability for future use, such as in a freezer or lyophilized materials), including:

(i) The name and characteristics (e.g., strain designation, GenBank Accession number, etc.),

(ii) The quantity acquired from another individual or entity (e.g., containers, vials, tubes, etc.), date of acquisition, and the source,

[4] This section does not cover transfers within an entity when the sender and the recipient are covered by the same certificate of registration.

(iii) Where stored (e.g., building, room, and freezer),

(iv) When moved from storage and by whom and when returned to storage and by whom,

(v) The select agent used and purpose of use,

(vi) Records created under § 73.16 and 9 CFR 121.16 (Transfers),

(vii) For intra-entity transfers (sender and the recipient are covered by the same certificate of registration), the select agent, the quantity transferred, the date of transfer, the sender, and the recipient, and

(viii) Records created under § 73.19 and 9 CFR part 121.19 (Notification of theft, loss, or release),

(2) Accurate, current inventory for each toxin held, including:

(i) The name and characteristics,

(ii) The quantity acquired from another individual or entity (e.g., containers, vials, tubes, etc.), date of acquisition, and the source,

(iii) The initial and current quantity amount (e.g., milligrams, milliliters, grams, etc.),

(iv) The toxin used and purpose of use, quantity, date(s) of the use and by whom,

(v) Where stored (e.g., building, room, and freezer),

(vi) When moved from storage and by whom and when returned to storage and by whom including quantity amount,

(vii) Records created under § 73.16 and 9 CFR part 121.16 (Transfers),

(viii) For intra-entity transfers (sender and the recipient are covered by the same certificate of registration), the toxin, the quantity transferred, the date of transfer, the sender, and the recipient,

(ix) Records created under § 73.19 and 9 CFR part 121.19 (Notification of theft, loss, or release), and

(x) If destroyed, the quantity of toxin destroyed, the date of such action, and by whom,

(3) A current list of all individuals that have been granted access approval from the HHS Secretary or Administrator,

(4) Information about all entries into areas containing select agents or toxins, including the name of the individual, name of the escort (if applicable), and date and time of entry,

(5) Accurate, current records created under § 73.9 and 9 CFR part 121.9 (Responsible Official), § 73.11 and 9 CFR part 121.11 (Security), § 73.12 and 9 CFR part 121.12 (Biosafety), § 73.14 and 9 CFR part 121. 14 (Incident response), and § 73.15 and 9 CFR part 121.15 (Training), and

(6) A written explanation of any discrepancies.

(b) The individual or entity must implement a system to ensure that all records and data bases created under this part are accurate, have controlled access, and that their authenticity may be verified.

(c) All records created under this part must be maintained for three years and promptly produced upon request.

§ 73.18 Inspections.

(a) Without prior notification, the HHS Secretary, shall be allowed to inspect any site at which activities regulated by this part are conducted and shall be allowed to inspect and copy any records relating to the activities covered by this part.

(b) Prior to issuing a certificate of registration to an individual or entity, the HHS Secretary may inspect and evaluate the premises and records to ensure compliance with this part.

§ 73.19 Notification of theft, loss, or release.

(a) Upon discovery of the theft or loss of a select agent or toxin, an individual or entity must immediately notify CDC or APHIS and appropriate Federal, State, or local law enforcement agencies. Thefts or losses must be reported even if the select agent or toxin is subsequently recovered or the responsible parties are identified.

(1) The theft or loss of a select agent or toxin must be reported immediately by telephone, facsimile, or e-mail. The following information must be provided:

(i) The name of the select agent or toxin and any identifying information (e.g., strain or other characterization information),

(ii) An estimate of the quantity lost or stolen,

(iii) An estimate of the time during which the theft or loss occurred,

(iv) The location (building, room) from which the theft or loss occurred, and

(v) The list of Federal, State, or local law enforcement agencies to which the individual or entity reported, or intends to report the theft or loss.

(2) A completed APHIS/CDC Form 3 must submitted within seven calendar days.

(b) Upon discovery of a release of an agent or toxin causing occupational exposure or release of a select agent or toxin outside of the primary barriers of the biocontainment area, an individual or entity must immediately notify CDC or APHIS.

(1) The release of a select agent or toxin must be reported by telephone, facsimile, or e-mail. The following information must be provided:

(i) The name of the select agent or toxin and any identifying information (e.g., strain or other characterization information),

(ii) An estimate of the quantity released,

(iii) The time and duration of the release,

(iv) The environment into which the release occurred (e.g., in building or outside of building, waste system),

(v) The location (building, room) from which the release occurred,

(vi) The number of individuals potentially exposed at the entity,

(vii) Actions taken to respond to the release, and

(viii) Hazards posed by the release.

(2) A completed APHIS/CDC Form 3 must be submitted within seven calendar days.

§ 73.20 Administrative review.

An individual or entity may appeal a denial, revocation, or suspension of registration under this part. An individual may appeal a denial, limitation, or revocation of access approval under this part. The appeal must be in writing, state the factual basis for the appeal, and be submitted to the HHS Secretary within 30 calendar days of the decision. Where the denial, revocation, or suspension of registration or the denial, limitation, or revocation of an individual's access approval is based upon an identification by the Attorney General, the request for review will be forwarded to the Attorney General. The HHS Secretary's decision constitutes final agency action.

§ 73.21 Civil money penalties.

(a) The Inspector General of the Department of Health and Human Services is delegated authority to conduct investigations and to impose civil money penalties against any individual or entity in accordance with regulations in 42 CFR part 1003 for violations of the regulations in this part, as authorized by the Public Health Security and Bioterrorism Preparedness and Response Act of 2002 (Pub. L. 107–188). The delegation of authority includes all powers contained in section 6 of the Inspector General Act of 1978 (5 U.S.C. App.).

(b) The administrative law judges in, assigned to, or detailed to the Departmental Appeals Board have been delegated authority to conduct hearings and to render decisions in accordance with 42 CFR part 1005 with respect to the imposition of civil money penalties, as authorized by the Public Health Security and Bioterrorism Preparedness and Response Act of 2002 (Pub. L. 107–188). This delegation includes, but is not limited to, the authority to administer oaths and affirmations, to subpoena witnesses and documents, to examine witnesses, to exclude or receive and give appropriate weight to materials and testimony offered as evidence, to make findings of fact and conclusions of law, and to determine the civil money penalties to be imposed.

(c) The Departmental Appeals Board of the Department of Health and Human Services is delegated authority to make final determinations with respect to the imposition of civil money penalties for violations of the regulations of this part.

PART 75—STANDARDS FOR THE ACCREDITATION OF EDUCATIONAL PROGRAMS FOR AND THE CREDENTIALING OF RADIOLOGIC PERSONNEL

Sec.

75.1 Background and purpose.

75.2 Definitions.
75.3 Applicability.
APPENDIX A TO PART 75—STANDARDS FOR ACCREDITATION OF EDUCATIONAL PROGRAMS FOR RADIOGRAPHERS
APPENDIX B TO PART 75—STANDARDS FOR ACCREDITATION OF DENTAL RADIOGRAPHY TRAINING FOR DENTAL HYGIENISTS
APPENDIX C TO PART 75—STANDARDS FOR ACCREDITATION OF DENTAL RADIOGRAPHY TRAINING FOR DENTAL ASSISTANTS
APPENDIX D TO PART 75—STANDARDS FOR ACCREDITATION OF EDUCATIONAL PROGRAMS FOR NUCLEAR MEDICINE TECHNOLOGISTS
APPENDIX E TO PART 75—STANDARDS FOR ACCREDITATION OF EDUCATIONAL PROGRAMS FOR RADIATION THERAPY TECHNOLOGISTS
APPENDIX F TO PART 75—STANDARDS FOR LICENSING RADIOGRAPHERS, NUCLEAR MEDICINE TECHNOLOGISTS, AND RADIATION THERAPY TECHNOLOGISTS
APPENDIX G TO PART 75—STANDARDS FOR LICENSING DENTAL HYGIENISTS AND DENTAL ASSISTANTS IN DENTAL RADIOGRAPHY

AUTHORITY: Sec. 979 of the Consumer-Patient Radiation Health and Safety Act of 1981, Pub. L. 97–35, 95 Stat. 599–600 (42 U.S.C. 10004).

SOURCE: 50 FR 50717, Dec. 11, 1985, unless otherwise noted.

§ 75.1 Background and purpose.

(a) The purpose of these regulations is to implement the provisions of section 979 of the Consumer-Patient Radiation Health and Safety Act of 1981, 42 U.S.C. 10004, which requires the establishment by the Secretary of Health and Human Services of standards for the accreditation of programs for the education of certain persons who administer radiologic procedures and for the credentialing of such persons.

(b) Section 979 requires the Secretary, after consultation with specified Federal agencies, appropriate agencies of States, and appropriate professional organizations, to promulgate by regulation the minimum standards described above. These standards distinguish between the occupations of (1) radiographer, (2) dental hygienist, (3) dental assistant, (4) nuclear medicine technologist, and (5) radiation therapy technologist. In the interest of public safety and to prevent the hazards of improper use of medical radiation identified by Congress in its determination of the need for standards, the Secretary is also authorized to prepare standards for other occupational groups utilizing ionizing and non-ionizing radiation as he/she finds appropriate. However, the standards set out below are limited to the five occupational groups listed above, utilizing ionizing radiation. Nothing in these accreditation standards is intended to discriminate against proprietary schools.

§ 75.2 Definitions.

All terms not defined herein shall have the meaning given them in the Act. As used in this part:

Accreditation, as applied to an educational program, means recognition, by a State government or by a nongovernmental agency or association, of a specialized program of study as meeting or exceeding certain established qualifications and educational standards. As applied to a health care or educational institution, *accreditation* means recognition, by a State government or by a nongovernmental agency or association, of the institution as meeting or exceeding certain established standards or criteria for that type of institution.

Act means the Consumer-Patient Radiation Health and Safety Act of 1981, 42 U.S.C. 10001–10008.

Continuing competency means the maintenance of knowledge and skills and/or demonstrated performance that are adequate and relevant to professional practice needs.

Credentialing means any process whereby a State Government or nongovernmental agency or association grants recognition to an individual who meets certain predetermined qualifications.

Dental hygienist means a person licensed by the State as a dental hygienist.

Dental assistant means a person other than a dental hygienist who assists a dentist in the care of patients.

Educational program means a set of formally structured activities designed to provide students with the knowledge and skills necessary to enter an occupation, with evaluation of student performance according to predetermined objectives.

Energized laboratory means any facility which contains equipment that generates ionizing radiation. This does not

include facilities for training students when the equipment is not powered to emit ionizing radiation, e.g., practice in setting controls and positioning of patients.

Formal training means training or education, including either didactic or clinical practicum or both, which has a specified objective, planned activities for students, and suitable methods for measuring student attainment, and which is offered, sponsored, or approved by an organization or institution which is able to meet or enforce these criteria.

Ionizing radiation means any electromagnetic or particulate radiation (X-rays, gamma rays, alpha and beta particles, high speed electrons, neutrons, and other nuclear particles) which interacts with atoms to produce ion pairs in matter.

Licensed practitioner means a licensed doctor of medicine, osteopathy, dentistry, podiatry, or chiropractic.

Licensure means the process by which an agency of State government grants permission to persons meeting predetermined qualifications to engage in an occupation.

Nuclear medicine technologist means a person other than a licensed practitioner who prepares and administers radio-pharmaceuticals to human beings and conducts *in vivo* or *in vitro* detection and measurement of radioactivity for medical purposes.

Permit means an authorization issued by a State for specific tasks or practices rather than the entire scope of practice in an occupation.

Radiation therapy technologist means a person other than a licensed practitioner who utilizes ionizing radiation-generating equipment for therapeutic purposes on human subjects.

Radiographer means an individual other than a licensed practitioner who (1) performs, may be called upon to perform, or who is licensed to perform a comprehensive scope of diagnostic radiologic procedures employing equipment which emits ionizing radiation, and (2) is delegated or exercises responsibility for the operation of radiation-generating equipment, the shielding of patient and staff from unnecessary radiation, the appropriate exposure of radiographs, or other procedures which contribute to any significant extent to the site or dosage of ionizing radiation to which a patient is exposed. Radiographers are distinguished from personnel whose use of diagnostic procedures is limited to a few specific body sites and/or standard procedures, from those personnel in other clinical specialties who may occasionally be called upon to assist in diagnostic radiology, and from those technicians or assistants whose activities do not, to any significant degree, determine the site or dosage of radiation to which a patient is exposed.

Radiologist means a physician certified in radiology by the American Board of Radiology or the American Osteopathic Board of Radiology.

§ 75.3 Applicability.

(a) *Federal Government.* Except as provided in section 983 of the Act, the credentialing standards set out in the Appendixes to this part apply to those individuals who administer or propose to administer radiologic procedures, in each department, agency and instrumentality of the Federal Government as follows:

(1) *Radiographer Standards* apply to all individuals who are radiographers as defined in § 75.2 and who are not practitioners excepted by the Act.

(2) *Nuclear Medicine Technologist Standards* apply to all individuals who are nuclear medicine technologists as defined in § 75.2, who perform *in vivo* nuclear medicine procedures, and who are not practitioners excepted by the Act. For purposes of this Act, any administration of radiopharmaceuticals to human beings is considered an *in vivo* procedure.

(3) *Radiation Therapy Technologist Standards* apply to all individuals who perform radiation therapy and who are not practitioners excepted by the Act.

(4) *Dental Hygienist Standards* apply to all dental hygienists who perform dental radiography.

(5) *Dental Assistant Standards* apply to all dental assistants who perform dental radiography.

(6) The following persons are deemed to have met the requirements of these standards:

(i) Persons employed by the Federal government as radiologic personnel

prior to the effective date of this regulation and who show evidence of current or fully satisfactory performance or certification of such from a licensed practitioner:

(ii) Uniformed military personnel who receive radiologic training from or through the Armed Forces of the United States and who meet standards established by the Department of Defense or components thereof, provided that those standards are determined by such Department or component to offer equivalent protection of patient health and safety:

(iii) Foreign national employed by the Federal government in positions outside of the United States who show evidence of training, experience, and competence determined by the employing agency to be equally protective of patients health and safety; and

(iv) Persons first employed by the Federal government as radiologic personnel after the effective date of this regulation who (*a*) received training from institutions in a State or foreign jurisdiction which did not accredit training in that particular field at the time of graduation, or (*b*) practiced in a State or foreign jurisdiction which did not license that particular field or which did not allow special eligibility to take a licensure examination for those who did not graduate from an accredited educational program; provided that such persons show evidence of training, experience, and competence determined by the Office of Personnel Management or the employing agency to be equally protective of patient health and safety.

(7) The following persons are exempted from these standards:

(i) Persons who are trained to perform, or perform, covered radiologic procedures in emergency situations which preclude use of fully qualified personnel; and

(ii) Students in approved training programs.

(8) A department, agency, or instrumentality of the Federal government may, after consultation with the Secretary, use alternative criteria which it determines would offer equivalent protection of patient health and safety.

(b) *States*. The States may, but are not required to, adopt standards for accreditation and credentialing that are consistent with the standards set out in the appendixes to this part.

APPENDIX A TO PART 75—STANDARDS FOR ACCREDITATION OF EDUCATIONAL PROGRAMS FOR RADIOGRAPHERS

A. Description of the Profession

The radiographer shall perform effectively by:

1. Applying knowledge of the principles of radiation protection for the patient, self, and others.
2. Applying knowledge of anatomy, positioning, and radiographic techniques to accurately demonstrate anatomical structures on a radiograph.
3. Determining exposure factors to achieve optimum radiographic technique with a minimum of radiation exposure to the patient.
4. Examining radiographs for the purpose of evaluating technique, positioning, and other pertinent technical qualities.
5. Exercising discretion and judgment in the performance of medical imaging procedures.
6. Providing patient care essential to radiologic procedures.
7. Recognizing emergency patient conditions and initiating lifesaving first aid.

B. Sponsorship

1. Accreditation will be granted to the institution that assumes primary responsibility for curriculum planning and selection of course content; coordinates classroom teaching and supervised clinical education; appoints faculty to the program; receives and processes applications for admission; and grants the degree or certificate documenting completion of the program.
2. Educational programs may be established in:

(a) Community and junior colleges, senior colleges, and universities;

(b) Hospitals;

(c) Medical schools;

(d) Postsecondary vocational/technical schools and institutions; and

(e) Other acceptable institutions which meet comparable standards.

3. The sponsoring institutions and affiliate(s) must be accredited by a recognized agency. When the sponsoring institution and affilitate(s) are not so recognized, they may be considered as meeting the requirements of accreditation if the institution meets or exceeds established equivalent standards.

C. Instructional Facilities

1. *General*. Appropriate classroom and clinical space, modern equipment, and supplies for supervised education shall be provided.
2. *Laboratory*. Energized laboratories utilized for teaching purposes shall be certified

as required for compliance with Federal and/or State radiation safety regulations. The use of laboratories shall be governed by established educational objectives.

3. *Reference Materials.* Adequate up-to-date scientific books, periodicals, and other reference materials related to the curriculum and profession shall be readily accessible to students.

D. Clinical Education

1. The clinical phase of the educational program shall provide an environment for supervised competency-based clinical education and experience and offer a sufficient and well-balanced variety of radiographic examinations and equipment.

2. An acceptable ratio of students to registered technologists shall be maintained in the clinical teaching environment.

3. A clinical instructor(s), who shall be responsible for supervising students according to objectives, shall be identified for each primary clinical education center.

4. The maximum student enrollment shall not exceed the capacity recommended on the basis of volume and variety of radiographic procedures, resources, and personnel available for teaching purposes.

5. In programs where didactic and clinical experience are not provided in the same institution, accreditation shall be given only to the institution responsible for admissions, curriculum, and academic credit. The accredited institution shall be responsible for coordinating the program and assuring that the activities assigned to the students in the clinical setting are educational. There shall be a uniform contract between the accredited institution and each of its affiliate hospitals, clearly defining the responsibilities and obligations of each.

E. Curriculum

1. The structure of the curriculum shall be based on not less than two calendar years of full-time study or its equivalent.

2. Instruction shall follow a planned outline that includes:

(a) The assignment of appropriate instructional materials;

(b) Classroom presentations, discussions and demonstrations; and

(c) Examinations in the didactic and clinical aspects of the program.

3. All professional courses, including clinical education, must include specific curriculum content that shall include, but shall not be limited to:

(a) Introduction to radiologic technology;

(b) Medical ethics;

(c) Imaging;

(d) Radiographic processing technique;

(e) Human structure and function;

(f) Medical terminology;

(g) Principals of radiographic exposure;

(h) Radiographic procedures;

(i) Principles of radiation protection;

(j) Radiographic film evaluation;

(k) Methods of patient care;

(l) Pathology;

(m) Radiologic physics; and

(n) Radiation biology.

Related subjects added to the professional curriculum shall meet the requirements of the degree-granting institution.

F. Finances

Financial resources for operation for the educational program shall be assured through regular budgets, gifts, grants, endowments, or fees.

G. Faculty

1. *Program Director.* A program director shall be designated who is credentialed in radiography. The program director's responsibilities in teaching, administration, and coordination of the educational program in radiography shall not be adversely affected by educationally unrelated functions.

(a) *Minimum qualifications.* A minimum of two years of professional experience and proficiency in instructing, curriculum design, program planning, and counseling.

(b) *Responsibilities.* (1) The program director, in consultation with the medical director/advisor (G. 2.) shall be responsible for the organization, administration, periodic review, records, continued development, and general policy and effectiveness of the program.

(2) Opportunities for continuing education shall be provided for all faculty members.

2. *Medical Director/Medical Advisor*—(a) *minimum qualifications.* The medical director/medical advisor shall be a qualified radiologist, certified by the American Board of Radiology, or shall possess suitable equivalent qualifications.

(b) *Responsibilities.* The medical director/medical advisor shall work in consultation with the program director in developing the goals and objectives of the program and implementing the standards for their achievement.

3. *Instructors.* All instructors shall be qualified through academic preparation and experience to teach the assigned subjects.

H. Students

ADMISSION

(a) Candidates for admission shall satisfy the following minimum requirements: Completion of four years of high school; successful completion of a standard equivalency test; or certification of equivalent education by an organization recognized by the United States Department of Education. Courses in physics, chemistry, biology, algebra, and geometry are strongly recommended.

(b) The number of students enrolled in each class shall be commensurate with the most effective learning and teaching practices and should also be consistent with acceptable student-teacher ratios.

I. Records

Records shall be maintained as dictated by good educational practices.

NOTE: Educational programs accredited by an organization recommended by the United States Department of Education are considered to have met these standards.

APPENDIX B TO PART 75—STANDARDS FOR ACCREDITATION OF DENTAL RADIOGRAPHY TRAINING FOR DENTAL HYGIENISTS

A. Sponsorship

Sponsorship must be by an entity that assumes primary responsibility for the planning and conduct of competency-based didactic and clinical training in dental radiography.

1. This responsibility must include: defining the curriculum in terms of program goals, instructional objectives, learning experiences designed to achieve goals and objectives, and evaluation procedures to assess attainment of goals and objectives; coordinating classroom teaching and supervised clinical experiences; appointing faculty; receiving and processing applications for admission; and granting documents of successful completion of the program.

2. The formal training in dental radiography may be a part of a total program of dental hygiene education accredited by an organization recognized by the United States Department of Education.

3. The sponsoring entity and the dental radiography training must be approved by the State entity responsible for approving dental hygiene education programs or the State entity responsible for credentialing dental personnel in radiography.

B. Curriculum

Dental radiography training for dental hygienists must provide sufficient content and instructional time to assure competent performance.

1. The dental radiography curriculum content and learning experiences must include the theoretical aspects of the subject as well as practical application of techniques. The theoretical aspects should provide content necessary for dental hygienists to understand the critical nature of the radiological procedures they perform and of the judgments they make as related to patient and operator radiation safety.

2. The dental radiography curriculum must include content in seven areas: radiation physics; radiation biology; radiation health, safety, and protection; X-ray films and radiographic film quality; radiographic techniques; darkroom and processing techniques; and film mounting.

—*Radiation Physics*. Curriculum content should include: historical background; role of radiology in modern dentistry; types of radiation; X-ray production principles; operation of X-ray equipment; properties of X-radiation; and X-radiation units, detection and monitoring devices.

—*Radiation Biology*. Curriculum content should include: Interaction of ionizing radiation with cells, tissues, and matter; factors influencing biological response of cells and tissues to ionizing radiation; somatic and genetic effects of radiation exposure; and cumulative effects of X-radiation and latent period.

—*Radiation Health, Safety, and Protection*. Curriculum content should include: Sources and types of radiation exposure; public health implications and public concerns; principles of radiological health including collimation and filtration; radiation protection methods in the dental office; necessity for high diagnostic yield with a reduction of X-radiation exposure; and monitoring devices.

—*X-ray Films and Radiographic Film Quality*. Curriculum content should include: X-radiation production and scatter; X-ray beam quality and quantity; factors influencing radiographic density, contrast, definition, and distortion; film characteristics; dosage related to film speed; types of films, cassettes, and screens; and film identification systems.

—*Radiographic Techniques*. Curriculum content should include: imagery geometry; patient positioning; film/film holder positioning; cone positioning and exposure settings for the intraoral paralleling technique, bisecting the angle technique, and techniques for occlusal radiographs; extaroral panoramic techniques; and patient variations that affect the above techniques.

—*Darkroom and Processing Techniques*. Curriculum content should include: solution chemistry and quality maintenance; darkroom equipment and safe lighting; film processing techniques; automatic film processing; and processing errors.

—*Film Mounting*. Curriculum content should include: anatomical landmarks essential to mounting films; film mounting procedures; and diagnostic quality of radiographs.

3. The curriculum must also include clinical practice assignments.

—Clinical practice assignments must be an integral part of the curriculum so that Dental Hygienists have the opportunity to develop competence in making

radiographs. Faculty supervision must be provided during a student's radiographic technique experience. Students must demonstrate competence in making diagnostically acceptable radiographs prior to their clinical practice where there is not direct supervision by faculty.

—Dental hygienists must demonstrate knowledge of radiation safety measures before making radiographs and, where possible, should demonstrate competence on manikins before making radiographs on patients. Radiographs must be exposed for diagnostic purposes and not solely to demonstrate techniques or obtain experience.

—The clinical experience should provide opportunity to make a variety of radiographs and radiographic surveys including primary, mixed, and permanent dentitions, as well as edentulous and partially edentulous patients.

C. Student Evaluation

Evaluation procedures must be developed to assess performance and achievement of dental radiography program objectives.

D. Faculty

The dental radiography training must be conducted by faculty who are qualified in the curriculum subject matter.

1. This may include a D.D.S./D.M.D. degree; graduation from an accredited dental assisting or dental hygiene education program with a certificate or an associate or baccalaureate degree; status as a Certified Dental Assistant certified by the Dental Assisting National Board; or recognition as equivalently qualified by the State entity which approved the training program in dental radiography.

2. The faculty-to-student ratio must be adequate to achieve the stated objectives of the curriculum.

E. Facilities

Adequate radiographic facilities must be available to permit achievement of the dental radiography training objectives. The design, location, and construction of radiographic facilities must provide optimum protection from X-radiation for patients and operators. Equipment shall meet State and Federal laws related to radiation. Monitoring devices shall be worn by dental personnel. Lead aprons must be placed to protect patients. Safe storage for films must be provided. Darkroom facilities and equipment must be available and of a quality that assures that films will not be damaged or lost.

F. Learning Resources

A wide range of printed materials, instructional aids, and equipment must be available to support instruction. Current specialized reference texts should be provided; and models, replicas, slides, and films which depict current techniques should be available for use in instruction. As appropriate self-instructional materials become available, they should be provided for the student's use.

NOTE: Educational programs accredited by an organization recognized by the United States Department of Education are considered to have met these standards. Under existing licensure provisions in all States, becoming a dental hygienist requires graduation from a dental hygiene education program accredited by an organization recognized by the United States Department of Education. In lieu of this requirement, Alabama accepts graduation from a State-approved preceptorship program.

APPENDIX C TO PART 75—STANDARDS FOR ACCREDITATION OF DENTAL RADIOGRAPHY TRAINING FOR DENTAL ASSISTANTS

A. Sponsorship

Sponsorship must be an entity that assumes primary responsibility for the planning and conduct of competency-based didactic and clinical training in dental radiography.

1. This responsibility must include: Defining the curriculum in terms of program goals, instructional objectives, learning experiences designed to achieve goals and objectives, and evaluation procedures to assess attainment of goals and objectives; coordinating classroom teaching and supervised clinical experiences; appointing faculty; receiving and processing applications for admission; and granting documents of successful completion of the program.

2. Dental radiography training may be freestanding (as a continuing education course offered by State dental/dental auxiliary societies, or by dental/dental auxiliary education programs); or be a part of an educational program in dental assisting. Such dental assisting education programs may be accredited by an organization recognized by the United States Department of Education; or located in a school accredited by an institutional accrediting agency recognized by the United States Department of Education or approved by the State agency responsible for secondary and postsecondary education, or approved by a Federal agency conducting dental assistant education in that Agency.

3. The sponsoring entity and the dental radiography training must be approved by the State entity responsible for approving dental assisting education programs, or the State entity responsible for credentialing dental personnel in radiography.

B. Curriculum

Dental radiography training for dental assistants must provide sufficient content and instructional time to assure competent performance.

1. The dental radiography curriculum content and learning experiences must include the theoretical aspects of the subject as well as practical application of techniques. The theoretical aspects should provide content necessary for dental assistants to understand the critical nature of the radiological procedures they perform and of the judgments they make as related to patient and operator radiation safety.

2. The dental radiography curriculum must include content in seven areas: radiation physics; radiation biology; radiation health, safety, and protection; X-ray films and radiographic film quality; radiographic techniques; darkroom and processing techniques; and film mounting.

—*Radiation Physics*. Curriculum content should include: Historical background; role of radiology in modern dentistry; types of radiation; X-ray production principles; operation of X-ray equipment; properties of X-radiation; and X-radiation units, detection and monitoring devices.

—*Radiation Biology*. Curriculum content should include: interaction of ionizing radiation with cells, tissues, and matter; factors influencing biological response of cells and tissues to ionizing radiation; somatic and genetic effects of radiation exposure; and cumulative effects of X-radiation and latent period.

—*Radiation Health, Safety, and Protection*. Curriculum content should include: sources and types of radiation exposure; public health implications and public concerns; principles of radiological health including collimation and filtration; radiation protection methods in the dental office; necessity for high diagnostic yield with a reduction of X-radiation exposure; and monitoring devices.

—*X-ray Films and Radiographic Film Quality*. Curriculum content should include: X-radiation production and scatter; X-ray beam quality and quantity; factors influencing radiographic density, contrast, definition, and distortion; film characteristics; dosage related to film speed; types of films, cassettes, and screens; and film identification systems.

—*Radiographic Techniques*. Curriculum content should include: imagery geometry; patient positioning; film/film holder positioning; cone positioning and exposure settings for the intraoral paralleling technique, bisecting the angle technique, and techniques for occlusal radiographs; extraoral panoramic techniques; and patient variations that affect the above techniques.

—*Darkroom and Processing Techniques*. Curriculum content should include: Solution chemistry and quality maintenance; darkroom equipment and safe lighting; film processing techniques; automatic film processing; and processing errors.

—*Film Mounting*. Curriculum content should include: anatomical landmarks essential to mounting films; film mounting procedures; and diagnostic quality of radiographs.

3. The curriculum must also include clinical practice assignments.

—Clinical practice assignments must be an integral part of the curriculum so that Dental Assistants have the opportunity to develop competence in making radiographs. The clinical experience may be conducted in the dental office in which the Dental Assistant is employed or is serving an externship. Faculty and/or employing dentist supervision must be provided during a student's radiographic technique experience. Students must demonstrate competence in making diagnostically acceptable radiographs prior to their clinical practice when there is not direct supervision by faculty and/or the employing dentist.

—Dental Assistants must demonstrate knowledge of radiation safety measures before making radiographs, and where possible should demonstrate competence on manikins before making radiographs on patients. Radiographs must be exposed for diagnostic purposes and not solely to demonstrate techniques or obtain experience.

—The clinical experience should provide opportunity to make a variety of radiographs and radiographic surveys, including primary, mixed, and permanent dentitions, as well as edentulous and partially edentulous patients.

C. Student Evaluation

Evaluation procedures must be developed to assess performance and achievement of dental radiography program objectives.

D. Faculty

The dental radiography training must be conducted by faculty who are qualified in the curriculum subject matter.

1. This may include a D.D.S./D.M.D. degree; graduation from an accredited dental assisting or dental hygiene education program with a certificate or an associate or baccalaureate degree; status as a Certified Dental Assistant certified by the Dental Assisting National Board; or recognition as equivalently qualified by the State entity (or Federal agency where appropriate) which approves the educational program in dental radiography.

2. The faculty-to-student ratio must be adequate to achieve the stated objectives of the curriculum.

E. Facilities

Adequate radiographic facilities must be available to permit achievement of the dental radiography training objectives. The design, location, and construction of radiographic facilities must provide optimum protection from X-radiation for patients and operators. Equipment shall meet State and Federal laws related to radiation. Monitoring devices shall be worn by dental personnel. Lead aprons must be placed to protect patients. Safe storage for films must be provided. Darkroom facilities and equipment must be available and of a quality that assures that films will not be damaged or lost.

F. Learning Resources

A wide range of printed materials, instructional aids, and equipment must be available to support instruction. Current specialized reference texts should be provided; and models, replicas, slides, and films which depict current techniques should be available for use in instruction. As appropriate self-instructional materials become available, they should be provided for the student's use.

NOTE: Educational programs accredited by an organization recognized by the United States Department of Education are considered to have met these standards.

APPENDIX D TO PART 75—STANDARDS FOR ACCREDITATION OF EDUCATIONAL PROGRAMS FOR NUCLEAR MEDICINE TECHNOLOGISTS

A. Sponsorship

1. Accreditation will be granted to the institution that assumes primary responsibility for curriculum planning and selection of course content; coordinates classroom teaching and supervised clinical education; appoints faculty to the program; receives and processes applications for admission; and grants the degree or certificate documenting completion of the program.

2. Educational programs may be established in:

(a) Community and junior colleges, senior colleges, and universities;

(b) Hospitals and clinics;

(c) Laboratories;

(d) Medical schools;

(e) Postsecondary vocational/technical schools and institutions; and

(f) Other acceptable institutions which meet comparable standards.

3. The sponsoring institution and affiliate(s) must be accredited by a recognized agency. When the sponsoring institution and affiliate(s) are not so recognized, they may be considered as meeting the requirements of accreditation if the institution meets or exceeds established equivalent standards.

4. Responsibilities of the sponsor and each affiliate for program administration, instruction, supervision, etc., must be carefully described in written affiliation agreements.

B. Curriculum

Instruction must follow a plan which documents:

1. A structured curriculum including clinical education with clearly written syllabi which describe learning objectives and competencies to be achieved. The curriculum shall be based on not less than one calendar year of full-time study or its equivalent.

2. The minimum professional curriculum that includes the following:

(a) Methods of patient care;

(b) Radiation safety and protection;

(c) Nuclear medicine physics;

(d) Radiation physics;

(e) Nuclear instrumentation;

(f) Statistics;

(g) Radionuclide chemistry;

(h) Radiopharmacology;

(i) Departmental organization and function;

(j) Radiation biology;

(k) Nuclear medicine *in vivo* and *in vitro* procedures;

(l) Radionuclide therapy;

(m) Computer applications; and

(n) Clinical practicum.

3. Assignment of appropriate instructional materials.

4. Classroom presentations, discussions, and demonstrations.

5. Supervised practice, experience, and discussions. This shall include the following:

(a) Patient care and patient recordkeeping;

(b) Participation in the quality assurance program;

(c) The preparation, calculation, identification, administration, and disposal of radiopharmaceuticals;

(d) Radiation safety techniques that will minimize radiation exposure to the patient, public, fellow workers, and self;

(e) The performance of an adequate number and variety of imaging and non-imaging procedures; and

(f) Clinical correlation of nuclear medicine procedures.

6. Evaluation of student's knowledge, problem-solving skills, and motor and clinical competencies.

7. The competencies necessary for graduation.

C. Resources

1. The program must have qualified program officials. Primary responsibilities shall

include program development, organization, administration, evaluation, and revision. The following program officials must be identified:

(a) *Program Director*—(1) *Responsibilities*. The program director of the educational program shall have overall responsibility for the organization, administration, periodic review, continued development, and general effectiveness of the program. The director shall provide supervision and coordination to the instructional staff in the academic and clinical phases of the program. Regular visits to the affiliates by the program director must be scheduled.

(2) *Qualifications*. The program director must be a physician or nuclear medicine technologist. The program director must demonstrate proficiency in instruction, curriculum design, program planning, and counseling.

(b) *Medical Director*—(1) *Responsibilities*. The medical director of the program shall provide competent medical direction and shall participate in the clinical instruction. In multiaffiliate programs each clinical affiliate must have a medical director.

(2) *Qualifications*. The medical director must be a physician qualified in the use of radionuclides and a diplomate of the American Board(s) of Nuclear Medicine, or Pathology, or Radiology, or possess suitable equivalent qualifications.

(c) *Clinical Supervisor*. Each clinical affiliate must appoint a clinical supervisor.

(1) *Responsibilities*. The clinical supervisor shall be responsible for the clinical education and evaluation of students assigned to that clinical affiliate.

(2) *Qualifications*. The clinical supervisor must be a technologist credentialed in nuclear medicine technology.

2. *Instructional Staff*—(a) *Responsibilities*. The instructional staff shall be responsible for instruction in the didactic and/or clinical phases of the program. They shall submit course outlines for each course assigned by the program director; evaluate students and report progress as required by the sponsoring institution; and cooperate with the program director in the periodic review and upgrading of course material.

(b) *Qualifications*. The instructors must be qualified, knowledgeable, and effective in teaching the subjects assigned.

(c) *Instructor-to-student ratio*. The instructor-to-student ratio shall be adequate to achieve the stated objectives of the curriculum.

(d) *Professional development*. Accredited programs shall assure continuing education in the health profession or occupation and ongoing instruction for the faculty in curriculum design and teaching techniques.

3. Financial resoures for continued operation of the educational program must be assured.

4. *Physical Resources*. (a) *General*. Adequate classrooms, laboratories, and other facilities shall be provided.

(b) *Equipment and Supplies*. Modern nuclear medicine equipment, accurately calibrated, in working order, and meeting applicable Federal and State standards, if any, must be available for the full range of diagnostic and therapeutic procedures as outlined in the curriculum.

(c) *Reference Materials*. Reference materials appropriate to the curriculum shall be readily accessible to students.

(d) *Records*. Records shall be maintained as dictated by good educational practices.

5. *Instructional Resources*. Instructional aids such as clinical materials, reference materials, demonstration and other multimedia materials must be provided.

D. Students

ADMISSION REQUIREMENTS

Persons admitted into nuclear medicine technology programs shall have completed high school or its equivalent. They shall have completed postsecondary courses in the following areas:

(1) Human anatomy and physiology;
(2) Physics;
(3) Mathematics;
(4) Medical terminology;
(5) Oral and written communications;
(6) General chemistry; and
(7) Medical ethics.

Prerequisites may be completed during nuclear medicine training. Educational institutions such as junior colleges, universities, and technical vocational institutes may provide these prerequisite courses as part of an integrated program in nuclear medicine technology (i.e., two to four years).

E. Operational Policies

Students may not take the responsibility nor the place of qualified staff. However, students may be permitted to perform procedures after demonstrating proficiency, with careful supervision.

F. Continuing Program Evaluation

1. Periodic and systematic review of the program's effectiveness must be documented.

2. One element of program evaluation shall be the initial employment of graduates of the program.

NOTE: Educational programs accredited by an organization recognized by the United States Department of Education are considered to have met these standards.

APPENDIX E TO PART 75—STANDARDS FOR ACCREDITATION OF EDUCATIONAL PROGRAMS FOR RADIATION THERAPY TECHNOLOGISTS

A. Sponsorship

1. Educational programs may be established in:

(a) Community and junior colleges, senior colleges, and universities;

(b) Hospitals, clinics, or autonomous radiation oncology centers meeting the criteria for major cancer management centers or meeting demonstrably equivalent standards;

(c) Medical schools; and

(d) Postsecondary vocational/technical schools and institutions.

2. The sponsoring institution and affiliates, if any, must be accredited by recognized agencies or meet equivalent standards. When more than one clinical education center is used, each must meet the standards of a major cancer management center.

3. When didactic preparation and supervised clinical education are not provided in the same institution, accreditation must be obtained by the sponsoring institution for the total program. This institution will be the one responsible for admission, curriculum, and academic credit. The accredited institution shall be responsible for coordinating the program and assuring that the activities assigned to the student in the clinical setting are educational. There shall be a uniform, written, affiliation agreement between the accredited institution and each clinical education center, clearly defining the responsibilities and obligations of each.

B. Curriculum

Educational programs of 24 months and 12 months or their equivalents may be developed. A 24-month program shall admit those candidates with a high school diploma (or equivalent) as outlined in D.1. The 12-month program shall be designed for those students admitted with backgrounds as outlined in D.2.

Instruction must follow a plan which documents:

1. A structured curriculum with clearly written course syllabi which describe competencies and learning objectives to be achieved. The curriculum shall include but not necessarily be limited to the following:

(a) Orientation to radiation therapy technology;

(b) Medical ethics and law;

(c) Methods of patient care;

(d) Medical terminology;

(e) Human structure and function;

(f) Oncologic pathology;

(g) Radiation oncology;

(h) Radiobiology;

(i) Mathematics;

(j) Radiation physics;

(k) Radiation protection;

(l) Radiation oncology technique;

(m) Radiographic imaging; and

(n) Clinical dosimetry.

The curriculum must include a plan for well-structured competency-based clinical education.

2. Assignment of appropriate instructional materials.

3. Classroom presentations, discussions, and demonstrations.

4. Supervised clinical education and laboratory practicum.

5. Evaluation of students to assess knowledge, problem-solving skills, and motor and clinical competencies.

6. Program graduates must demonstrate competencies including, but not limited to, the following:

(a) Practice oral and written communications;

(b) Maintain records of treatment administered;

(c) Perform basic mathematical functions;

(d) Demonstrate knowledge of human structure, function, and pathology;

(e) Demonstrate knowledge of radiation physics in radiation interactions and radiation protection techniques;

(f) Provide basic patient care and cardiopulmonary resuscitation;

(g) Deliver a planned course of radiation therapy;

(h) Verify physician's prescribed course of radiation therapy and recognize errors in computation;

(i) Demonstrate awareness of patterns of physical and emotional stress exhibited by patients;

(j) Produces and utilize immobilization and beam directional devices;

(k) Prepare commonly used brachytherapy sources;

(l) Demonstrate knowledge of methods of calibration of equipment, and quality assurance;

(m) Prepare isodose summations;

(n) Detect malfunctioning equipment;

(o) Apply rules and regulations for radiation safety, and detect defects which might pose a radiation hazard;

(p) Understand the function of equipment and accessories;

(q) Demonstrate knowledge of methods of continuing patient evaluation (follow up);

(r) Apply wedge and compensating filters;

(s) Recognize patients' clinical progress, complications, and demonstrate knowledge of when to withhold treatment until consultation with the physician; and

(t) Interact with patients and families concerning the physical and psychological needs of patients.

C. Resources

1. *Program Officials*. The program must have a qualified program official or officials. Primary responsibilities shall include program development, organization, administration, evaluation, and revision. A program director is necessary; other program officials may be required.

(a) *Program Director*—(1) *Responsibilities*.

—The director of the educational program shall be responsible for the organization, administration, periodic review, continued development, and general effectiveness of the program. The program director's responsibilities in teaching, administration, and coordination of the educational program in radiation therapy technology shall not be adversely affected by educationally unrelated functions.

—In a college-sponsored program, or a hospital-sponsored multiple affiliate program, the program director shall be an employee of the sponsoring institution. A schedule of regular affiliate visits must be maintained.

(2) *Qualifications*.

—Must be a technologist qualified in radiation therapy technology and educational methodologies.

—Must be credentialed in radiation therapy technology or possess suitable equivalent qualifications.

—Must have at least two years' experience as an instructor in an accredited educational program.

(b) *Clinical Supervisor*. Each clinical education center shall appoint a clinical supervisor.

(1) *Responsibilities*. The clinical supervisor shall be responsible for the clinical education and evaluation of students assigned to that clinical education center.

(2) *Qualifications*. Must be a technologist, with suitable experience, qualified in radiation therapy technology and educational methodologies and must be credentialed in radiation therapy technology.

(c) *Medical Director/Medical Advisor*—

(1) *Responsibilities*. The medical director/medical advisor shall work in consultation with the program director in developing the goals and objectives of the program and implementing the standards for achievement.

(2) *Qualifications*. The medical director/medical advisor shall be a qualified radiation oncologist certified by the American Board of Radiology, or shall possess suitable equivalent qualifications.

2. *Instructional Staff*— (a) *Responsibilities*. The instructional staff shall be responsible for submitting course outlines for each course assigned by the program director; evaluating students and reporting progress as required by the sponsoring institution; and cooperating with the program director in the periodic review and upgrading of course material.

(b) *Qualifications*. The instructors must be individually qualified, must be effective in teaching the subjects assigned, and must meet the standards required by the sponsoring institution.

(c) *Instructor-to-Student Ratio*. The instructor-to-student ratio shall be adequate to achieve the stated objectives of the curriculum.

(d) *Professional Development*. Programs shall have a policy that encourages continuing education in radiation therapy technology and assures ongoing instruction for the faculty in curriculm design and teaching strategies.

3. *Financial Resources*. Financial resources for continued operation of the educational program must be assured.

4. *Physical Resources*—(a) *General*. Adequate classrooms, laboratories, and other facilities shall be provided. All affiliated institutions shall provide space required for these facilities.

(b) *Equipment and Supplies*. Appropriate modern equipment and supplies in sufficient quantities shall be provided.

(c) *Laboratory*. Energized laboratories must meet Federal and/or State radiation and safety regulations.

(d) *Reference Materials*. An adequate supply of up-to-date books, periodicals, and other reference materials related to the curriculum and the profession shall be readily available to students.

(e) *Records*. Records shall be maintained as dictated by good educational practices.

5. *Instructional Resources*. Instructional aids such as clinical materials, reference materials, and demonstration and other multimedia materials must be provided.

D. Students

ADMISSION

1. Applicants must be high school graduates (or equivalent) with an educational background in basic science and mathematics.

2. For admission to a 12-month program, the candidate must satisfy one of the following requirements:

(a) Graduation from an accredited or equivalent program in radiography.

(b) Successful completion or challenge of courses in the following prerequisite content areas:

—Radiation physics;
—Human structure and function;
—Radiation protection;
—Medical ethics and law;
—Methods of patient care;
—Medical terminology; and
—Mathematics.

(c) Successful demonstration of the following competencies:

—Practice oral and written communications;
—Perform basic mathematical functions;
—Demonstrate knowledge of human structure and function;
—Demonstrate knowledge of radiation physics in radiation interactions and radiation protection techniques;
—Provide basic patient care and cardiopulmonary resuscitation;
—Demonstrate awareness of patterns of physical and emotional stress exhibited by patients;
—Apply rules and regulations for radiation safety, detect defects which might pose a radiation hazard, and maintain control, if a radiation accident occurs; and
—Interact with patients and families concerning patients physical and psychological needs.

E. Continuing Program Evaluation

1. A process for periodic and systematic review of the program's effectiveness must be documented and reflected in policies.

2. Program evaluation shall include the employment performance of recent graduates.

NOTE: Educational programs accredited by an organization recognized by the United States Department of Education are considered to have met these standards.

APPENDIX F TO PART 75—STANDARDS FOR LICENSING RADIOGRAPHERS, NUCLEAR MEDICINE TECHNOLOGISTS, AND RADIATION THERAPY TECHNOLOGISTS

The following section describes basic elements to be incorporated in credentialing programs of States that choose to regulate personnel who perform radiologic procedures.

A. Licensure

1. Only eligible applicants who have passed the licensure examination shall be licensed as Radiographers, Nuclear Medicine Technologists, or Radiation Therapy Technologists.

2. Licenses shall be renewed at periodic intervals.

B. Eligibility

1. For regular eligibility to take the licensure examination, applicants shall have successfully completed an accredited program of formal education in radiography, nuclear medicine technology, or radiation therapy technology.

2. Special eligibility to take the licensure examination shall be provided for applicants whose training and/or experience are equal to, or in excess of, those of a graduate of an accredited educational program.

C. Examination

A criterion-referenced examination in radiography, nuclear medicine technology, or radiation therapy technology shall be utilized to test the knowledge and competencies of applicants.

D. Continuing Competency

The licensed Radiographer, Nuclear Medicine Technologist, or Radiation Therapy Technologist shall maintain continuing competency in the area in which he/she is practicing.

E. Policies and Procedures

An organization that seeks to be recognized for the certifying of personnel shall adopt definite policies to ensure validity, objectivity, and fairness in the certifying process. The National Commission for Health Certifying Agencies (NCHCA) has published suitable criteria for a certifying organization to adopt with respect to policies for: (1) Determination of appropriate examination content (but not the actual content for any specific occupation); (2) construction of examinations; (3) administration of examinations; and (4) fulfilling responsibilities to applicants. An organization (whether an NCHCA member or not) that adopts these or equivalent criteria will meet all of the requirements of this section of these standards.

APPENDIX G TO PART 75—STANDARDS FOR LICENSING DENTAL HYGIENISTS AND DENTAL ASSISTANTS IN DENTAL RADIOGRAPHY

The following section describes basic elements to be incorporated in credentialing programs of States that choose to regulate personnel who perform radiologic procedures.

Currently, Dental Hygienists are credentialed through individual State licensure processes, all of which include assessment of competence in dental radiography. In all States, Dental Hygienists are required to be licensed prior to practicing. The existing State dental hygiene licensure processes meet the intent and purpose of the Consumer-Patient Radiation Health and Safety Act of 1981 and the standards for licensing Dental Hygienists in dental radiography set forth below.

A. Licensure/Permit

1. To those who have passed a licensure or designated dental radiography examination, a license or permit shall be issued by the State entity responsible for credentialing dental personnel.

2. Licenses or permits shall be renewed at periodic intervals.

B. Eligibility

1. An individual shall provide proof of graduating student status or graduation from an accredited or approved dental hygiene or dental assisting education program.

2. For dental assistants, special eligibility to take the examination shall be provided to applicants with appropriate combinations of training and/or experience.

C. Examination

A criterion-referenced examination in dental radiography shall be utilized to test the knowledge and competencies of applicants.

D. Continuing Competency

The Dental Hygienist or Dental Assistant shall be required to maintain continuing competency in the area in which he/she is practicing.

E. Policies and Procedures

An organization that seeks to be recognized for the certifying of personnel shall adopt definite policies to ensure validity, objectivity, and fairness in the certifying process. The National Commission for Health Certifying Agencies (NCHCA) has published suitable criteria for a certifying organization to adopt with respect to policies for: (1) Determination of appropriate examination content (but not the actual content for any specific occupation); (2) construction of examinations; (3) administration of examinations; and (4) fulfilling responsibilities to applicants. An organization (whether an NCHCA member or not) that adopts these or equivalent criteria will meet all of the requirements of this section of these standards.

SUBCHAPTER G—OCCUPATIONAL SAFETY AND HEALTH RESEARCH AND RELATED ACTIVITIES

PART 80—ADMINISTRATIVE FUNCTIONS, PRACTICES, AND PROCEDURES

Subparts A–C [Reserved]

Subpart D—Tuition Fees for Direct Training

Sec.
80.41 Applicability.
80.42 Definitions.
80.43 Tuition fees.
80.44 Schedule of fees.
80.45 Procedure for payment.
80.46 Refunds.

Subparts A–C [Reserved]

Subpart D—Tuition Fees for Direct Training

AUTHORITY: Sec. 501, 65 Stat. 290; 31 U.S.C. 483a.

SOURCE: 38 FR 16645, June 25, 1973, unless otherwise noted.

Subparts A–C [Reserved]

§ 80.41 Applicability.

The provisions of this subpart set forth the policies of the National Institute for Occupational Safety and Health with respect to its charging fees for direct training in occupational safety or health.

§ 80.42 Definitions.

Any term not defined herein shall have the same meaning as given it in the act. As used in this subpart:

(a) *Act* means the Occupational Safety and Health Act of 1970 (29 U.S.C. 651 *et seq.*).

(b) *Direct training* means all technical training courses conducted directly by NIOSH for personnel of State and local governmental agencies, other Federal agencies, private industries, universities, and other non-NIOSH agencies and organizations.

(c) *NIOSH* or *Institute* means the National Institute for Occupational Safety and Health.

(d) *Registration Office* means the Direct Training Registration Office, NIOSH, 1014 Broadway, Cincinnati, OH 45202.

§ 80.43 Tuition fees.

In accordance with the provisions of the subpart, the National Institute for Occupational Safety and Health will charge fees for all students attending NIOSH direct training courses which commence on or after July 1, 1973.

§ 80.44 Schedule of fees.

(a) Tuition fees will be computed on the basis of the cost to the Government for the Institute's participation in the course, as determined by the Director of the Institute.

(b) Total tuition charges for each course will be set forth in the course announcement.

§ 80.45 Procedure for payment.

(a) Applications for direct training courses shall be completed and submitted to the registration office in accordance with the instructions issued by that office.

(b) Federal agency personnel shall, upon notification of their acceptance, submit a letter identifying the agency and office to be billed, the agency order number, and any code numbers or other information necessary for billing purposes.

(c) All other applicants shall, upon notification of their acceptance by NIOSH, submit a check payable to the National Institute for Occupational Safety and Health in the amount indicated by the course announcement prior to the commencement of the training course.

§ 80.46 Refunds.

An applicant may withdraw his application and receive full reimbursement of the fee provided that written notification to the registration office is mailed no later than 10 days before the commencement of the course for which registration has been submitted.

PART 81—GUIDELINES FOR DETERMINING PROBABILITY OF CAUSATION UNDER THE ENERGY EMPLOYEES OCCUPATIONAL ILLNESS COMPENSATION PROGRAM ACT OF 2000

Subpart A—Introduction

Sec.
81.0 Background.
81.1 Purpose and Authority.
81.2 Provisions of EEOICPA concerning this part.

Subpart B—Definitions

81.4 Definition of terms used in this part.

Subpart C—Data Required To Estimate Probability of Causation

81.5 Use of personal and medical information
81.6 Use of radiation dose information.

Subpart D—Requirements for Risk Models Used To Estimate Probability of Causation

81.10 Use of cancer risk assessment models in NIOSH-IREP.
81.11 Use of uncertainty analysis in NIOSH-IREP.
81.12 Procedure for updating NIOSH-IREP.

Subpart E—Guidelines To Estimate Probability of Causation

81.20 Required use of NIOSH-IREP.
81.21 Cancers requiring the use of NIOSH-IREP.
81.22 General guidelines for use of NIOSH-IREP.
81.23 Guidelines for cancers for which primary site is unknown.
81.24 Guidelines for leukemia.
81.25 Guidelines for claims involving two or more primary cancers.
81.30 Non-radiogenic cancers.
APPENDIX A TO PART 81—GLOSSARY OF ICD–9 CODES AND THEIR CANCER DESCRIPTIONS.

AUTHORITY: 42 U.S.C. 7384n(c); E.O. 13179, 65 FR 77487, 3 CFR, 2000 Comp., p. 321.

SOURCE: 67 FR 22309, May 2, 2002, unless otherwise noted.

Subpart A—Introduction

§ 81.0 Background.

The Energy Employees Occupational Illness Compensation Program Act (EEOICPA), 42 U.S.C. 7384–7385 [1994, supp. 2001], provides for the payment of compensation benefits to covered employees and, where applicable, survivors of such employees, of the United States Department of Energy, its predecessor agencies and certain of its contractors and subcontractors. Among the types of illnesses for which compensation may be provided are cancers. There are two categories of covered employees with cancer under EEOICPA for whom compensation may be provided. The regulations that follow under this part apply only to the category of employees described under paragraph (a) of this section.

(a) One category is employees with cancer for whom probability of causation must be estimated or determined, as required under 20 CFR 30.115.

(b) The second category is members of the Special Exposure Cohort seeking compensation for a specified cancer, as defined under EEOICPA. The U.S. Department of Labor (DOL) which has primary authority for implementing EEOICPA, has promulgated regulations at 20 CFR 30.210 *et seq.* that identify current members of the Special Exposure Cohort and requirements for compensation. Pursuant to section 7384(q) of EEOICPA, the Secretary of HHS is authorized to add additional classes of employees to the Special Exposure Cohort.

§ 81.1 Purpose and Authority.

(a) The purpose of this regulation is to establish guidelines DOL will apply to adjudicate cancer claims for covered employees seeking compensation for cancer, other than as members of the Special Exposure Cohort seeking compensation for a specified cancer. To award a claim, DOL must first determine that it is at least as likely as not that the cancer of the employee was caused by radiation doses incurred by the employee in the performance of duty. These guidelines provide the procedures DOL must apply and identify the information DOL will use.

(b) Section 7384(n)(b) of EEOICPA requires the President to promulgate these guidelines. Executive Order 13179 assigned responsibility for promulgating these guidelines to the Secretary of HHS.

§81.2 Provisions of EEOICPA concerning this part.

EEOICPA imposes several general requirements concerning the development of these guidelines. It requires that the guidelines produce a determination as to whether it is at least as likely as not (a 50% or greater probability) that the cancer of the covered employee was related to radiation doses incurred by the employee in the performance of duty. It requires the guidelines be based on the radiation dose received by the employee, incorporating the methods of dose reconstruction to be established by HHS. It requires determinations be based on the upper 99 percent confidence interval (credibility limit) of the probability of causation in the RadioEpidemiological tables published under section 7(b) of the Orphan Drug Act (42 U.S.C. 241 note), as such tables may be updated. EEOICPA also requires HHS consider the type of cancer, past health-related activities, the risk of developing a radiation-related cancer from workplace exposure, and other relevant factors. Finally, it is important to note EEOICPA does not include a requirement limiting the types of cancers to be considered radiogenic for these guidelines.

Subpart B—Definitions

§81.4 Definition of terms used in this part.

(a) Covered employee, for purposes of this part, means an individual who is or was an employee of DOE, a DOE contractor or subcontractor, or an atomic weapons employer, and for whom DOL has requested HHS to perform a dose reconstruction.

(b) *Dose and dose rate effectiveness factor (DDREF)* means a factor applied to a risk model to modify the dose-risk relationship estimated by the model to account for the level of the dose and the rate at which the dose is incurred. As used in IREP, a DDREF value of greater than one implies that chronic or low doses are less carcinogenic per unit of dose than acute or higher doses.

(c) *Dose-response relationship* means a mathematical expression of the way that the risk of a biological effect (for example, cancer) changes with increased exposure to a potential health hazard (for example, ionizing radiation).

(d) *EEOICPA* means the Energy Employees Occupational Illness Compensation Program Act of 2000, 42 U.S.C. §§7384–7385 [1994, supp. 2001].

(e) *Equivalent dose* means the absorbed dose in a tissue or organ multiplied by a radiation weighting factor to account for differences in the effectiveness of the radiation in inducing cancer.

(f) *External dose* means the portion of the equivalent dose that is received from radiation sources outside of the body.

(g) *Interactive RadioEpidemiological Program (IREP)* means a computer software program that uses information on the dose-response relationship, and specific factors such as a claimant's radiation exposure, gender, age at diagnosis, and age at exposure to calculate the probability of causation for a given pattern and level of radiation exposure.

(h) *Internal dose* means the portion of the equivalent dose that is received from radioactive materials taken into the body.

(i) *Inverse dose rate effect* means a phenomenon in which the protraction of an exposure to a potential health hazard leads to greater biological effect per unit of dose than the delivery of the same total amount in a single dose. An inverse dose rate effect implies that the dose and dose rate effectiveness factor (DDREF) is less than one for chronic or low doses.

(j) *Linear energy transfer (LET)* means the average amount of energy transferred to surrounding body tissues per unit of distance the radiation travels through body tissues (track length). Low LET radiation is typified by gamma and x rays, which have high penetrating capabilities through various tissues, but transfer a relatively small amount of energy to surrounding tissue per unit of track length. High LET radiation includes alpha particles and neutrons, which have weaker penetrating capability but transfer a larger amount of energy per unit of track length.

(k) *NIOSH* means the National Institute for Occupational Safety and Health, Centers for Disease Control and

Prevention, United States Department of Health and Human Services.

(l) *Non-radiogenic cancer* means a type of cancer that HHS has found not to be caused by radiation, for the purposes of this regulation.

(m) *Primary cancer* means a cancer defined by the original body site at which the cancer was incurred, prior to any spread (metastasis) to other sites in the body.

(n) *Probability of causation* means the probability or likelihood that a cancer was caused by radiation exposure incurred by a covered employee in the performance of duty. In statistical terms, it is the cancer risk attributable to radiation exposure divided by the sum of the baseline cancer risk (the risk to the general population) plus the cancer risk attributable to the radiation exposure.

(o) *RadioEpidemiological Tables* means tables that allow computation of the probability of causation for various cancers associated with a defined exposure to radiation, after accounting for factors such as age at exposure, age at diagnosis, and time since exposure.

(p) *Relative biological effectiveness (RBE)* means a factor applied to a risk model to account for differences between the amount of cancer effect produced by different forms of radiation. For purposes of EEOICPA, the RBE is considered equivalent to the radiation weighting factor.

(q) *Risk model* means a mathematical model used under EEOICPA to estimate a specific probability of causation using information on radiation dose, cancer type, and personal data (e.g., gender, smoking history).

(r) *Secondary site* means a body site to which a primary cancer has spread (metastasized).

(s) *Specified cancer* is a term defined in § 7384(l)(17) of EEOICPA and 20 CFR 30.5(dd) that specifies types of cancer that, pursuant to 20 CFR part 30, may qualify a member of the Special Exposure Cohort for compensation. It includes leukemia (other than chronic lymphocytic leukemia), multiple myeloma, non-Hodgkin's lymphoma, renal cancers, and cancers of the lung (other than carcinoma in situ diagnosed at autopsy), thyroid, male breast, female breast, esophagus, stomach, pharynx, small intestine, pancreas, bile ducts, gall bladder, salivary gland, urinary bladder, brain, colon, ovary, liver (not associated with cirrhosis or hepatitis B), and bone.

(t) *Uncertainty* is a term used in this rule to describe the lack of precision of a given estimate, the extent of which depends upon the amount and quality of the evidence or data available.

(u) *Uncertainty distribution* is a statistical term meaning a range of discrete or continuous values arrayed around a central estimate, where each value is assigned a probability of being correct.

(v) *Upper 99 percent confidence interval* is a term used in EEOICPA to mean credibility limit, the probability of causation estimate determined at the 99th percentile of the range of uncertainty around the central estimate of probability of causation.

Subpart C—Data Required To Estimate Probability of Causation

§ 81.5 Use of personal and medical information.

Determining probability of causation may require the use of the following personal and medical information provided to DOL by claimants under DOL regulations 20 CFR part 30:

(a) Year of birth

(b) Cancer diagnosis (by ICD–9 code) for primary and secondary cancers

(c) Date of cancer diagnosis

(d) Gender

(e) Race/ethnicity (if the claim is for skin cancer or a secondary cancer for which skin cancer is a likely primary cancer)

(f) Smoking history (if the claim is for lung cancer or a secondary cancer for which lung cancer is a likely primary cancer)

§ 81.6 Use of radiation dose information.

Determining probability of causation will require the use of radiation dose information provided to DOL by the National Institute for Occupational Safety and Health (NIOSH) under HHS regulations 42 CFR part 82. This information will include annual dose estimates for each year in which a dose was incurred, together with uncertainty distributions associated with

each dose estimate. Dose estimates will be distinguished by type of radiation (low linear energy transfer (LET), protons, neutrons, alpha, low-energy x-ray) and by dose rate (acute or chronic) for external and internal radiation dose.

Subpart D—Requirements for Risk Models Used To Estimate Probability of Causation

§81.10 Use of cancer risk assessment models in NIOSH IREP.

(a) The risk models used to estimate probability of causation for covered employees under EEOICPA will be based on risk models updated from the 1985 NIH Radioepidemiological Tables. These 1985 tables were developed from analyses of cancer mortality risk among the Japanese atomic bomb survivor cohort. The National Cancer Institute (NCI) and Centers for Disease Control and Prevention (CDC) are updating the tables, replacing them with a sophisticated analytic software program. This program, the Interactive RadioEpidemiological Program (IREP)[1], models the dose-response relationship between ionizing radiation and 33 cancers using morbidity data from the same Japanese atomic bomb survivor cohort. In the case of thyroid cancer, radiation risk models are based on a pooled analysis of several international cohorts[1a].

(b) NIOSH will change the risk models in IREP, as needed, to reflect the radiation exposure and disease experiences of employees covered under EEOICPA, which differ from the experiences of the Japanese atomic bomb survivor cohort. Changes will be incorporated in a version of IREP named NIOSH-IREP, specifically designed for adjudication of claims under EEOICPA. Possible changes in IREP risk models include the following:

(1) Addition of risk models to IREP, as needed, for claims under EEOICPA (e.g., malignant melanoma and other skin cancers)

(2) Modification of IREP risk models to incorporate radiation exposures unique to employees covered by EEOICPA (e.g., radon and low energy x rays from employer-required medical screening programs, adjustment of relative biological effectiveness distributions based on neutron energy).

(3) Modification of IREP risk models to incorporate new understanding of radiation-related cancer effects relevant to employees covered by EEOICPA (e.g., incorporation of inverse dose-rate relationship between high LET radiation exposures and cancer; adjustment of the low-dose effect reduction factor for acute exposures).

(4) Modification of IREP risk models to incorporate new understanding of the potential interaction between cancer risk associated with occupational exposures to chemical carcinogens and radiation-related cancer effects.

(5) Modification of IREP risk models to incorporate temporal, race and ethnicity-related differences in the frequency of certain cancers occurring generally among the U.S. population.

(6) Modifications of IREP to facilitate improved evaluation of the uncertainty distribution for the probability of causation for claims based on two or more primary cancers.

§81.11 Use of uncertainty analysis in NIOSH-IREP.

(a) EEOICPA requires use of the uncertainty associated with the probability of causation calculation, specifically requiring the use of the upper 99% confidence interval (credibility limit) estimate of the probability of causation estimate. As described in the NCI document,[2] uncertainty from several sources is incorporated into the probability of causation calculation performed by NIOSH-IREP. These sources include uncertainties in estimating: radiation dose incurred by the covered employee; the radiation dose-cancer relationship (statistical uncertainty in the specific cancer risk

[1] NIOSH-IREP is available for public review on the NIOSH homepage at: *www.cdc.gov/niosh/ocas/ocasirep/html*.

[1a] Ron E, Lubin JH, Shore RE, et al. ''Thyroid cancer after exposure to external radiation: a pooled analysis of seven studies.'' Radiat. Res. 141:259–277, 1995.

[2] Draft Report of the NCI-CDC Working Group to Revise the 1985 NIH Radioepidemiological Tables, May 31, 2000, p. 17–18, p. 22–23.

model); the extrapolation of risk (risk transfer) from the Japanese to the U.S. population; differences in the amount of cancer effect caused by different radiation types (relative biological effectiveness or RBE); the relationship between the rate at which a radiation dose is incurred and the level of cancer risk produced (dose and dose rate effectiveness factor or DDREF); and, the role of non-radiation risk factors (such as smoking history).

(b) NIOSH-IREP will operate according to the same general protocol as IREP for the analysis of uncertainty. It will address the same possible sources of uncertainty affecting probability of causation estimates, and in most cases will apply the same assumptions incorporated in IREP risk models. Different procedures and assumptions will be incorporated into NIOSH-IREP as needed, according to the criteria outlined under § 81.10.

§ 81.12 Procedure to update NIOSH-IREP.

(a) NIOSH may periodically revise NIOSH-IREP to add, modify, or replace cancer risk models, improve the modeling of uncertainty, and improve the functionality and user-interface of NIOSH-IREP.

(b) Revisions to NIOSH-IREP may be recommended by the following sources:

(1) NIOSH,

(2) The Advisory Board on Radiation and Worker Health,

(3) Independent reviews of NIOSH-IREP or elements thereof by scientific organizations (e.g., National Academy of Sciences),

(4) DOL,

(5) Public comment.

(c) NIOSH will submit substantive changes to NIOSH-IREP (changes that would substantially affect estimates of probability of causation calculated using NIOSH-IREP, including the addition of new cancer risk models) to the Advisory Board on Radiation and Worker Health for review. NIOSH will obtain such review and address any recommendations of the review before completing and implementing the change.

(d) NIOSH will inform the public of proposed changes provided to the Advisory Board for review. HHS will provide instructions for obtaining relevant materials and providing public comment in the notice announcing the Advisory Board meeting, published in the FEDERAL REGISTER.

(e) NIOSH will publish periodically a notice in the FEDERAL REGISTER informing the public of proposed substantive changes to NIOSH-IREP currently under development, the status of the proposed changes, and the expected completion dates.

(f) NIOSH will notify DOL and publish a notice in the FEDERAL REGISTER notifying the public of the completion and implementation of substantive changes to NIOSH-IREP. In the notice, NIOSH will explain the effect of the change on estimates of probability of causation and will summarize and address relevant comments received by NIOSH.

(g) NIOSH may take into account other factors and employ other procedures than those specified in this section, if circumstances arise that require NIOSH to implement a change more immediately than the procedures in this section allow.

Subpart E—Guidelines To Estimate Probability of Causation

§ 81.20 Required use of NIOSH-IREP.

(a) NIOSH-IREP is an interactive software program for estimating probability of causation for covered employees seeking compensation for cancer under EEOICPA, other than as members of the Special Exposure Cohort seeking compensation for a specified cancer.

(b) DOL is required to use NIOSH-IREP to estimate probability of causation for all cancers, as identified under §§ 81.21 and 81.23.

§ 81.21 Cancers requiring the use of NIOSH-IREP.

(a) DOL will calculate probability of causation for all cancers, except chronic lymphocytic leukemia as provided under § 81.30, using NIOSH-IREP.

(b) Carcinoma in situ (ICD–9 codes 230–234), neoplasms of uncertain behavior (ICD–9 codes 235–238), and neoplasms of unspecified nature (ICD–9 code 239) are assumed to be malignant,

for purposes of estimating probability of causation.

(c) All secondary and unspecified cancers of the lymph node (ICD–9 code 196) shall be considered secondary cancers (cancers resulting from metastasis of cancer from a primary site). For claims identifying cancers of the lymph node, Table 1 in §81.23 provides guidance for assigning a primary site and calculating probability of causation using NIOSH-IREP.

§81.22 General guidelines for use of NIOSH-IREP.

DOL will use procedures specified in the NIOSH-IREP Operating Guide to calculate probability of causation estimates under EEOICPA. The guide provides current, step-by-step instructions for the operation of IREP. The procedures include entering personal, diagnostic, and exposure data; setting/confirming appropriate values for variables used in calculations; conducting the calculation; and, obtaining, evaluating, and reporting results.

§81.23 Guidelines for cancers for which primary site is unknown.

(a) In claims for which the primary cancer site cannot be determined, but a site of metastasis is known, DOL will calculate probability of causation estimates for various likely primary sites. Table 1, below, indicates the primary cancer site(s) DOL will use in NIOSH-IREP when the primary cancer site is unknown.

TABLE 1

Primary cancers (ICD–9 codes[3]) for which probability of causation is to be calculated, if only a secondary cancer site is known. ''M'' indicates cancer site should be used for males only, and ''F'' indicates the cancer site should be used for females only. A glossary of cancer descriptions for each ICD–9 code is provided in appendix A to this part.

Secondary cancer (ICD–9 code)	ICD–9 code of likely primary cancers
Lymph nodes of head, face and neck (196.0).	141, 142 (M), 146 (M), 149 (F), 161 (M), 162, 172, 173, 174 (F), 193 (F).
Intrathoracic lymph nodes (196.1)	150 (M), 162, 174 (F).
Intra-abdominal lymph nodes (196.2)	150 (M), 151 (M), 153, 157 (F), 162, 174 (F), 180 (F), 185 (M), 189, 202 (F).
Lymph nodes of axilla and upper limb (196.3).	162, 172, 174 (F).
Inguinal and lower limb lymph nodes (196.5).	154 (M), 162, 172, 173 (F), 187 (M).
Intrapelvic lymph nodes (196.6)	153 (M), 154 (F), 162 (M), 180 (F), 182 (F), 185 (M), 188.
Lymph nodes of multiple sites (196.8)	150 (M), 151 (M), 153 (M), 162, 174 (F).
Lymph nodes, site unspecified (196.9)	150 (M), 151, 153, 162, 172, 174 (F), 185 (M).
Lung (197.0)	153, 162, 172 (M), 174 (F), 185 (M), 188 (M), 189.
Mediastinum (197.1)	150 (M), 162, 174 (F).
Pleura (197.2)	150 (M), 153 (M), 162, 174 (F), 183 (F), 185 (M), 189 (M).
Other respiratory organs (197.3)	150, 153 (M), 161, 162, 173 (M), 174 (F), 185 (M), 193 (F).
Small intestine, including duodenum (197.4).	152, 153, 157, 162, 171, 172 (M), 174 (F), 183 (F), 189 (M).
Large intestine and rectum (197.5)	153, 154, 162, 174 (F), 183 (F), 185 (M).
Retroperitoneum and peritoneum (197.6)	151, 153, 154 (M), 157, 162 (M), 171, 174 (F), 182 (F), 183 (F).
Liver, specified as secondary (197.7)	151 (M), 153, 154 (M), 157, 162, 174 (F).
Other digestive organs (197.8)	150 (M), 151, 153, 157, 162, 174 (F), 185 (M).
Kidney (198.0)	153, 162, 174 (F), 180 (F), 185 (M), 188, 189, 202 (F).
Other urinary organs (198.1)	153, 174 (F), 180 (F), 183 (F), 185 (M), 188, 189 (F).
Skin (198.2)	153, 162, 171 (M), 172, 173 (M), 174 (F), 189 (M).
Brain and spinal cord (198.3)	162, 172 (M), 174 (F).
Other parts of nervous system (198.4)	162, 172 (M), 174 (F), 185 (M), 202.
Bone and bone marrow (198.5)	162, 174 (F), 185 (M).
Ovary (198.6)	153 (F), 174 (F), 183 (F).
Suprarenal gland (198.7)	153 (F), 162, 174 (F).
Other specified sites (198.8)	153, 162, 172 (M), 174 (F), 183 (F), 185 (M), 188 (M).

[3] The International Classification of Diseases Clinical Modification (9th Revision) Volume I&II. [1991] Department of Health and Human Services Publication No. (PHS) 91–1260, U.S. Government Printing Office, Washington D.C.

(b) DOL will select the site producing the highest estimate for probability of causation to adjudicate the claim.

§ 81.24 Guidelines for leukemia.

(a) For claims involving leukemia, DOL will calculate one or more probability of causation estimates from up to three of the four alternate leukemia risk models included in NIOSH-IREP, as specified in the NIOSH-IREP Operating Guide. These include: ''Leukemia, all types except CLL'' (IDC–9 codes: 204–208, except 204.1), ''acute lymphocytic leukemia'' (ICD–9 code: 204.0), and ''acute myelogenous leukemia'' (ICD–9 code: 205.0).

(b) For leukemia claims in which DOL calculates multiple probability of causation estimates, as specified in the NIOSH-IREP Operating Guide, the probability of causation estimate DOL assigns to the claim will be based on the leukemia risk model producing the highest estimate for probability of causation.

§ 81.25 Guidelines for claims including two or more primary cancers.

For claims including two or more primary cancers, DOL will use NIOSH-IREP to calculate the estimated probability of causation for each cancer individually. Then DOL will perform the following calculation using the probability of causation estimates produced by NIOSH-IREP:

EQUATION 1

Calculate: $1-[\{1-PC_1\} \times \{1-PC_2\} \times . . . \times \{1-PC_n\}] = PC_{total}$,

where PC_1 is the probability of causation for one of the primary cancers identified in the claim, PC_2 is the probability of causation for a second primary cancer identified in the claim, and PC_n is the probability of causation for the nth primary cancer identified in the claim. PC_{total} is the probability that at least one of the primary cancers (cancers 1 through ''n'') was caused by the radiation dose estimated for the claim when Equation 1 is evaluated based on the joint distribution of PC_1, . . ., PC_n.[4] DOL will use the probability of causation value calculated for PC_{total} to adjudicate the claim.

[67 FR 22309, May 2, 2002; 67 FR 62096, Oct. 3, 2002]

§ 81.30 Non-radiogenic cancers.

The following cancers are considered non-radiogenic for the purposes of EEOICPA and this part. DOL will assign a probability of causation of zero to the following cancers:

(a) Chronic lymphocytic leukemia (ICD–9 code: 204.1)

(b) [Reserved]

APPENDIX A TO PART 81—GLOSSARY OF ICD–9 CODES AND THEIR CANCER DESCRIPTIONS[1]

ICD–9 code	Cancer description
140	Malignant neoplasm of lip.
141	Malignant neoplasm of tongue.
142	Malignant neoplasm of major salivary glands.
143	Malignant neoplasm of gum.
144	Malignant neoplasm of floor of mouth.
145	Malignant neoplasm of other and unspecified parts of mouth.
146	Malignant neoplasm of oropharynx.
147	Malignant neoplasm of nasopharynx.
148	Malignant neoplasm of hypopharynx.
149	Malignant neoplasm of other and ill-defined sites within the lip, oral cavity, and pharynx.
150	Malignant neoplasm of esophagus.
151	Malignant neoplasm of stomach.
152	Malignant neoplasm of small intestine, including duodenum.
153	Malignant neoplasm of colon.

[4] Evaluating Equation 1 based on the individual upper 99th percentiles of PC_1, . . ., PC_n approximates the upper 99th percentile of PC_{total} whenever PC_1, . . ., PC_n are highly related, e.g., when a common dose-reconstruction is the only non-negligible source of uncertainty in the individual PC_i's. However, this approximation can overestimate it if other sources of uncertainty contribute independently to the PC_1, . . ., PC_n, whereas treating the joint distribution as fully independent could substantially underestimate the upper 99th percentile of PC_{total} whenever the individual PC_i's are positively correlated.

ICD–9 code	Cancer description
154	Malignant neoplasm of rectum, rectosigmoid junction, and anus.
155	Malignant neoplasm of liver and intrahepatic bile ducts.
156	Malignant neoplasm of gall bladder and extrahepatic bile ducts.
157	Malignant neoplasm of pancreas.
158	Malignant neoplasm of retroperitoneum and peritoneum.
159	Malignant neoplasm of other and ill-defined sites within the digestive organs and peritoneum.
160	Malignant neoplasm of nasal cavities, middle ear, and accessory sinuses.
161	Malignant neoplasm of larynx.
162	Malignant neoplasm of trachea, bronchus and lung.
163	Malignant neoplasm of pleura.
164	Malignant neoplasm of thymus, heart, and mediastinum.
165	Malignant neoplasm of other and ill-defined sites within the respiratory system and intrathoracic organs.
170	Malignant neoplasm of bone and articular cartilage.
171	Malignant neoplasm of connective and other soft tissue.
172	Malignant melanoma of skin.
173	Other malignant neoplasms of skin.
174	Malignant neoplasm of female breast.
175	Malignant neoplasm of male breast.
179	Malignant neoplasm of uterus, part unspecified.
180	Malignant neoplasm of cervix uteri.
181	Malignant neoplasm of placenta.
182	Malignant neoplasm of body of uterus.
183	Malignant neoplasm of ovary and other uterine adnexa.
184	Malignant neoplasm of other and unspecified female genital organs.
185	Malignant neoplasm of prostate.
186	Malignant neoplasm of testis.
187	Malignant neoplasm of penis and other male genital organs.
188	Malignant neoplasm of urinary bladder.
189	Malignant neoplasm of kidney and other unspecified urinary organs.
190	Malignant neoplasm of eye.
191	Malignant neoplasm of brain.
192	Malignant neoplasm of other and unspecified parts of nervous system.
193	Malignant neoplasm of thyroid gland.
194	Malignant neoplasm of other endocrine glands and related structures.
195	Malignant neoplasm of other and ill-defined sites.
196	Secondary and unspecified malignant neoplasm of the lymph nodes.
197	Secondary malignant neoplasm of the respiratory and digestive organs.
198	Secondary malignant neoplasm of other tissue and organs.
199	Malignant neoplasm without specification of site.
200	Lymphosarcoma and reticulosarcoma.
201	Hodgkin's disease.
202	Other malignant neoplasms of lymphoid and histiocytic tissue.
203	Multiple myeloma and other immunoproliferative neoplasms.
204	Lymphoid leukemia
205	Myeloid leukemia.
206	Monocytic leukemia.
207	Other specified leukemia.
208	Leukemia of unspecified cell type.

[1] The International Classification of Diseases Clinical Modification (9th Revision) Volume I&II. [1991] Department of Health and Human Services Publication No. (PHS) 91–1260, U.S. Government Printing Office, Washington, D.C.

PART 82—METHODS FOR CONDUCTING DOSE RECONSTRUCTION UNDER THE ENERGY EMPLOYEES OCCUPATIONAL ILLNESS COMPENSATION PROGRAM ACT OF 2000

Subpart A—Introduction

Sec.

82.0 Background Information on this part.
82.1 What is the purpose of this part?
82.2 What are the basics of dose reconstruction?
82.3 What are the requirements for dose reconstruction under EEOICPA?
82.4 How will DOL use the results of the NIOSH dose reconstructions?

Subpart B—Definitions

82.5 Definition of terms used in this part.

Subpart C—Dose Reconstruction Process

82.10 Overview of the dose reconstruction process.
82.11 For which claims under EEOICPA will NIOSH conduct a dose reconstruction?
82.12 Will it be possible to conduct dose reconstructions for all claims?

82.13 What sources of information may be used for dose reconstructions?
82.14 What types of information could be used in dose reconstructions?
82.15 How will NIOSH evaluate the completeness and adequacy of individual monitoring data?
82.16 How will NIOSH add to monitoring data to remedy limitations of individual monitoring and missed dose?
82.17 What types of information could be used to supplement or substitute for individual monitoring data?
82.18 How will NIOSH calculate internal dose to the primary cancer site(s)?
82.19 How will NIOSH address uncertainty about dose levels?

Subpart D—Reporting and Review of Dose Reconstruction Results

82.25 When will NIOSH report dose reconstruction results, and to whom?
82.26 How will NIOSH report dose reconstruction results?
82.27 How can claimants obtain reviews of their NIOSH dose reconstruction results by NIOSH?
82.28 Who can review NIOSH dose reconstruction files on individual claimants?

Subpart E—Updating Scientific Elements Underlying Dose Reconstructions

82.30 How will NIOSH inform the public of any plans to change scientific elements underlying the dose reconstruction process to maintain methods reasonably current with scientific progress?
82.31 How can the public recommend changes to scientific elements underlying the dose reconstruction process?
82.32 How will NIOSH make changes in scientific elements underlying the dose reconstruction process, based on scientific progress?
82.33 How will NIOSH inform the public of changes to the scientific elements underlying the dose reconstruction process?

AUTHORITY: 42 U.S.C. 7384n(d) and (e); E.O. 13179, 65 FR 77487, 3 CFR, 2000 Comp., p. 321.

SOURCE: 67 FR 22330, May 2, 2002, unless otherwise noted.

Subpart A—Introduction

§ 82.0 Background information on this part.

The Energy Employees Occupational Illness Compensation Program Act (EEOICPA), 42 U.S.C. 7384–7385 [1994, supp. 2001], provides for the payment of compensation benefits to covered employees and, where applicable, survivors of such employees, of the United States Department of Energy (''DOE''), its predecessor agencies and certain of its contractors and subcontractors. Among the types of illnesses for which compensation may be provided are cancers. There are two categories of covered employees with cancer under EEOICPA for whom compensation may be provided. The regulations that follow under this part apply only to the category of employees described under paragraph (a) of this section.

(a) One category is employees with cancer for whom a dose reconstruction must be conducted, as required under 20 CFR 30.115.

(b) The second category is members of the Special Exposure Cohort seeking compensation for a specified cancer, as defined under EEOICPA. The U.S. Department of Labor (DOL) which has primary authority for implementing EEOICPA, has promulgated regulations at 20 CFR 30.210 and 30.213 that identify current members of the Special Exposure Cohort and requirements for compensation. Pursuant to section 3626 of EEOICPA, the Secretary of HHS is authorized to add additional classes of employees to the Special Exposure Cohort.

§ 82.1 What is the purpose of this part?

The purpose of this part is to provide methods for determining a reasonable estimate of the radiation dose received by a covered employee with cancer under EEOICPA, through the completion of a dose reconstruction. These methods will be applied by the National Institute for Occupational Safety and Health (NIOSH) in a dose reconstruction program serving claimants under EEOICPA, as identified under § 82.0.

§ 82.2 What are the basics of dose reconstruction?

The basic principle of dose reconstruction is to characterize the radiation environments to which workers were exposed and to then place each worker in time and space within this exposure environment. Then methods are applied to translate exposure to radiation into quantified radiation doses at the specific organs or tissues relevant to the types of cancer occurring

among the workers. A hierarchy of methods is used in a dose reconstruction, depending on the nature of the exposure conditions and the type, quality, and completeness of data available to characterize the environment.

(a) If found to be complete and adequate, individual worker monitoring data, such as dosimeter readings and bioassay sample results, are given the highest priority in assessing exposure. These monitoring data are interpreted using additional data characterizing the workplace radiation exposures. If radiation exposures in the workplace environment cannot be fully characterized based on available data, default values based on reasonable and scientific assumptions may be used as substitutes. For dose reconstructions conducted in occupational illness compensation programs, this practice may include use of assumptions that represent the worst case conditions. For example, if the solubility classification of an inhaled material can not be determined, the dose reconstruction would use the classification that results in the largest dose to the organ or tissue relevant to the cancer and that is possible given existing knowledge of the material and process.

(b) If individual monitoring data are not available or adequate, dose reconstructions may use monitoring results for groups of workers with comparable activities and relationships to the radiation environment. Alternatively, workplace area monitoring data may be used to estimate the dose. As with individual worker monitoring data, workplace exposure characteristics are used in combination with workplace monitoring data to estimate dose.

(c) If neither adequate worker nor workplace monitoring data are available, the dose reconstruction may rely substantially on process description information to analytically develop an exposure model. For internal exposures, this model includes such factors as the quantity and composition of the radioactive substance (the source term), the chemical form, particle size distribution, the level of containment, and the likelihood of dispersion.

§ 82.3 What Are the Requirements for Dose Reconstruction Under EEOICPA?

(a) Dose reconstructions are to be conducted for the following covered employees with cancer seeking compensation under EEOICPA: An employee who was not monitored for exposure to radiation at DOE or Atomic Weapons Employer (AWE) facilities; an employee who was monitored inadequately for exposure to radiation at such facilities; or an employee whose records of exposure to radiation at such facility are missing or incomplete. Technical limitations of radiation monitoring technology and procedures will require HHS to evaluate each employee's recorded dose. In most, if not all cases, monitoring limitations will result in possibly undetected or unrecorded doses, which are estimated using commonly practiced dose reconstruction methods and would have to be added to the dose record.

(b) Section 7384(n)(e) of EEOICPA requires the reporting of radiation dose information resulting from dose reconstructions to the covered employees for whom claims are being adjudicated. DOE is specifically charged with this responsibility but the Department of Health and Human Services (HHS), which will be producing the dose reconstruction information, will report its findings directly to the claimant, as well as to DOL and DOE. HHS will also make available to researchers and the general public information on the assumptions, methodology, and data used in estimating radiation doses, as required by EEOICPA.

§ 82.4 How Will DOL Use the Results of the NIOSH Dose Reconstructions?

Under 42 CFR part 81, DOL will apply dose reconstruction results together with information on cancer diagnosis and other personal information provided to DOL by the claimant to calculate an estimated probability of causation. This estimate is the probability that the cancer of the covered employee was caused by radiation exposure at a covered facility of DOE or an Atomic Weapons Employer (AWE).

Subpart B—Definitions

§ 82.5 Definition of terms used in this part.

(a) *Atomic weapons employer* (AWE) means any entity, other than the United States, that:

(1) processed or produced, for use by the United States, material that emitted radiation and was used in the production of an atomic weapon, excluding uranium mining and milling; and,

(2) is designated by the Secretary of Energy as an atomic weapons employer for purposes of EEOICPA.

(b) *Bioassay* means the determination of the kinds, quantities, or concentrations, and in some cases, locations of radioactive material in the human body, whether by direct measurement or by analysis, and evaluation of radioactive material excreted or eliminated by the body.

(c) *Claimant* means the individual who has filed with the Department of Labor for compensation under EEOICPA.

(d) *Covered employee* means, for the purposes of this part, an individual who is or was an employee of DOE, a DOE contractor or subcontractor, or an atomic weapons employer, and for whom DOL has requested HHS to perform a dose reconstruction.

(e) *Covered facility* means any building, structure, or premises, including the grounds upon which such building, structure, or premise is located:

(1) In which operations are, or have been, conducted by, or on behalf of, the DOE (except for buildings, structures, premises, grounds, or operations covered by Executive Order 12344, dated February 1, 1982, pertaining to the Naval Nuclear Propulsion Program); and,

(2) With regard to which the DOE has or had:

(i) A proprietary interest; or,

(ii) Entered into a contract with an entity to provide management and operation, management and integration, environmental remediation services, construction, or maintenance services; or

(3) A facility owned by an entity designated by the Secretary of Energy as an atomic weapons employer for purposes of EEOICPA that is or was used to process or produce, for use by the United States, material that emitted radiation and was used in the production of an atomic weapon, excluding uranium mining or milling.

(f) *DOE* means the U.S. Department of Energy, and includes predecessor agencies of DOE, including the Manhattan Engineering District.

(g) *DOL* means the U.S. Department of Labor.

(h) *EEOICPA* means the Energy Employees Occupational Illness Compensation Program Act of 2000, 42 U.S.C. 7384–7385 [1994, supp. 2001].

(i) *Equivalent dose* is the absorbed dose in a tissue multiplied by a radiation weighting factor to account for differences in the effectiveness of the radiation in inducing cancer.

(j) *External dose* means that portion of the equivalent dose that is received from radiation sources outside of the body.

(k) *Internal dose* means that portion of the equivalent dose that is received from radioactive materials taken into the body.

(l) *NIOSH* means the National Institute for Occupational Safety and Health, Centers for Disease Control and Prevention, U.S. Department of Health and Human Services.

(m) *Primary cancer* means a cancer defined by the original body site at which the cancer was incurred, prior to any spread (metastasis) resulting in tumors at other sites in the body.

(n) *Probability of causation* means the probability or likelihood that a cancer was caused by radiation exposure incurred by a covered employee in the performance of duty. In statistical terms, it is the cancer risk attributable to radiation exposure divided by the sum of the baseline cancer risk (the risk to the general population) plus the cancer risk attributable to the radiation exposure. This concept is further explained under 42 CFR part 81, which provides guidelines by which DOL will determine probability of causation under EEOICPA.

(o) *Radiation* means ionizing radiation, including alpha particles, beta particles, gamma rays, x rays, neutrons, protons and other particles capable of producing ions in the body. For purposes of this rule, radiation does

not include sources of non-ionizing radiation such as radio-frequency radiation, microwaves, visible light, and infrared or ultraviolet light radiation.

(p) *Specified cancer* is a term defined in Section 3621(17) of EEOICPA and 20 CFR 30.5(dd) that specifies types of cancer that, pursuant to 20 CFR part 30, may qualify a member of the Special Exposure Cohort for compensation. It includes leukemia (other than chronic lymphocytic leukemia), multiple myeloma, non-Hodgkin's lymphoma, and cancers of the lung (other than carcinoma in situ diagnosed at autopsy), thyroid, male breast, female breast, esophagus, stomach, pharynx, small intestine, pancreas, bile ducts, gall bladder, salivary gland, urinary bladder, brain, colon, ovary, liver (not associated with cirrhosis or hepatitis), and bone. Pursuant to section 2403 of Public Law 107–20, this definition will include renal cancer effective October 1, 2001.

(q) *Uncertainty distribution* is a statistical term meaning a range of discrete or continuous values arrayed around a central estimate, where each value is assigned a probability of being correct.

(r) *Worst-case assumption* is a term used to describe a type of assumption used in certain instances for certain dose reconstructions conducted under this rule. It assigns the highest reasonably possible value, based on reliable science, documented experience, and relevant data, to a radiation dose of a covered employee.

Subpart C—Dose Reconstruction Process

§ 82.10 Overview of the dose reconstruction process.

(a) Upon receipt of a claims package from the Department of Labor, as provided under 20 CFR part 30, NIOSH will request from DOE records on radiation dose monitoring and radiation exposures associated with the employment history of the covered employee. Additionally, NIOSH may compile data, and information from NIOSH records that may contribute to the dose reconstruction. For each dose reconstruction, NIOSH will include records relevant to internal and external exposures to ionizing radiation, including exposures from medical screening x rays that were required as a condition of employment.

(b) NIOSH will evaluate the initial radiation exposure record compiled to: Reconcile the exposure record with the reported employment history, as necessary; complete preliminary calculations of dose, based upon this initial record, and prepare to consult with the claimant. Any discrepancies in the employment history information will be reconciled with the assistance of DOE, as necessary.

(c) NIOSH will interview the claimant. The interview may be conducted in one or more sessions. The purpose of the interview is to:

(1) Explain the dose reconstruction process;

(2) Confirm elements of the employment history transmitted to NIOSH by DOL;

(3) Identify any relevant information on employment history that may have been omitted;

(4) Confirm or supplement monitoring information included in the initial radiation exposure record;

(5) Develop detailed information on work tasks, production processes, radiologic protection and monitoring practices, and incidents that may have resulted in undocumented radiation exposures, as necessary;

(6) Identify co-workers and other witnesses with information relevant to the radiation exposures of the covered worker to supplement or confirm information on work experiences, as necessary.

(d) NIOSH will provide a report to the claimant summarizing the findings of the interview, titled: ''NIOSH Claimant Interview under EEOICPA.'' The report will also notify the claimant of the opportunity to contact NIOSH if necessary, by a specified date, to make any written corrections or additions to information provided by the claimant during the interview process.

(e) Information provided by the claimant will be accepted and used for dose reconstruction, providing it is reasonable, supported by substantial evidence, and is not refuted by other evidence. In assessing whether the information provided by the claimant is

supported by substantial evidence, NIOSH will consider:

(1) Consistency of the information with other information in the possession of NIOSH, from radiation safety programs, research, medical screening programs, labor union documents, worksite investigations, dose reconstructions conducted by NIOSH under EEOICPA, or other reports relating to the circumstances at issue;

(2) Consistency of the information with medical records provided by the claimant;

(3) Consistency of the information with practices or exposures demonstrated by the dose reconstruction record developed for the claimant; and,

(4) Confirmation of information by co-workers or other witnesses.

(f) NIOSH will seek to confirm information provided by the claimant through review of available records and records requested from DOE.

(g) As necessary, NIOSH will request additional records from DOE to characterize processes and tasks potentially involving radiation exposure for which dose and exposure monitoring data is incomplete or insufficient for dose reconstruction.

(h) NIOSH will review the adequacy of monitoring data and completeness of records provided by DOE. NIOSH will request certification from DOE that record searches requested by NIOSH have been completed.

(i) As necessary, NIOSH will characterize the internal and external exposure environments for parameters known to influence the dose. For internal exposures, examples of these parameters include the mode of intake, the composition of the source term (i.e., the radionuclide type and quantity), the particle size distribution and the absorption type. When it is not possible to characterize these parameters, NIOSH may use default values, when they can be established reasonably, fairly, and based on relevant science. For external exposures, the radiation type (gamma, x-ray, neutron, beta, or other charged particle) and radiation energy spectrum will be evaluated. When possible, the effect of non-uniformity and geometry of the radiation exposure will be assessed.

(j) For individual monitoring records that are incomplete, NIOSH may assign doses using techniques discussed in § 82.16. Once the resulting data set is complete, NIOSH will construct an occupational exposure matrix, using the general hierarchical approach discussed in § 82.2. This matrix will contain the estimated annual equivalent dose(s) to the relevant organ(s) or tissue(s), for the period from the initial date of potential exposure at a covered facility until the date the cancer was diagnosed. The equivalent dose(s) will be calculated using the current, standard radiation weighting factors from the International Commission on Radiological Protection.[1]

(k) At any point during steps of dose reconstruction described in paragraphs (f) through (j) of this section, NIOSH may determine that sufficient research and analysis has been conducted to complete the dose reconstruction. Research and analysis will be determined sufficient if one of the following three conditions is met:

(1) From acquired experience, it is evident the estimated cumulative dose is sufficient to qualify the claimant for compensation (*i.e.*, the dose produces a probability of causation of 50% or greater);

(2) Dose is determined using worst-case assumptions related to radiation exposure and intake, to substitute for further research and analyses; or,

(3) Research and analysis indicated under steps described in paragraphs (f)–(j) of this section have been completed. Worst-case assumptions will be employed under condition 2 to limit further research and analysis only for claims for which it is evident that further research and analysis will not produce a compensable level of radiation dose (a dose producing a probability of causation of 50% or greater), because using worst-case assumptions it can be determined that the employee could not have incurred a compensable level of radiation dose. For all claims in which worst-case assumptions are

[1] The current weighting factors of the International Commission on Radiological Protection are provided in ICRP 60: ''1990 Recommendations of the International Commission on Radiological Protection.'' Ann. ICRP 21 (1–3):6.

employed under condition 2, the reasoning that resulted in the determination to limit further research and analysis will be clearly described in the draft of the dose reconstruction results reported to the claimant under § 82.25 and in the dose reconstruction results reported to the claimant under § 82.26.

(l) After providing the claimant with a copy of a draft of the dose reconstruction report to be provided to DOL, NIOSH will conduct a closing interview with the claimant to review the dose reconstruction results and the basis upon which the results were calculated. This will be the final opportunity during the dose reconstruction process for the claimant to provide additional relevant information that may affect the dose reconstruction. The closing interview may require multiple sessions, if the claimant requires time to obtain and provide additional information, and to allow NIOSH time to integrate the new information into a new draft of the dose reconstruction report. NIOSH will determine whether to grant requests for time to provide additional information, based on whether the requests are reasonable and the claimant is actively seeking the information specified.

(m) Subject to any additional information provided by the claimant and revision of the draft dose reconstruction report under § 82.10(l), the claimant is required to return form OCAS–1 to NIOSH, certifying that the claimant has completed providing information and that the record for dose reconstruction should be closed. Upon receipt of the form, NIOSH will forward a final dose reconstruction report to DOL, DOE, and to the claimant.

(n) NIOSH will not forward the dose reconstruction report to DOL for adjudication without receipt of form OCAS–1 signed by the claimant or a representative of the claimant authorized pursuant to 20 CFR 30.600. If the claimant or the authorized representative of the claimant fails to sign and return form OCAS–1 within 60 days, or 60 days following the claimant's final provision of additional information and receipt of a revised draft dose reconstruction report under § 82.10 (l), whichever occurs last, after notifying the claimant or the authorized representative, NIOSH may administratively close the dose reconstruction and notify DOL of this action. Upon receiving this notification by NIOSH, DOL may administratively close the claim.

(o) Once actions under § 82.10 (m) are completed, the record for dose reconstruction shall be closed unless reopened at the request of DOL under 20 CFR part 30.

§ 82.11 For which claims under EEOICPA will NIOSH conduct a dose reconstruction?

NIOSH will conduct a dose reconstruction for each claim determined by DOL to be a claim for a covered employee with cancer under DOL regulations at 20 CFR 30.210(b), subject to the limitation and exception noted in § 82.12. Claims for covered employees who are members of the Special Exposure Cohort seeking compensation for a specified cancer, as determined by DOL under 20 CFR 30.210(a), do not require and will not receive a dose reconstruction under this rule.

§ 82.12 Will it be possible to conduct dose reconstructions for all claims?

It is uncertain whether adequate information of the types outlined under § 82.14 will be available to complete a dose reconstruction for every claim eligible under § 82.11.

(a) NIOSH will notify in writing any claimants for whom a dose reconstruction cannot be completed once that determination is made, as well as in the closing interview provided for under § 82.10(l).

(b) Notification will describe the basis for finding a dose reconstruction cannot be completed, including the following:

(1) A summary of the information obtained from DOE and other sources; and, (2) a summary of necessary information found to be unavailable from DOE and other sources.

(c) NIOSH will notify DOL and DOE when it is unable to complete a dose reconstruction for the claimant. This will result in DOL producing a recommended decision to deny the claim, since DOL cannot determine probability of causation without a dose estimate produced by NIOSH under this rule.

(d) A claimant for whom a dose reconstruction cannot be completed, as indicated under this section, may have recourse to seek compensation under provisions of the Special Exposure Cohort (see 20 CFR part 30). Pursuant to section 7384q of EEOICPA, the Secretary of HHS is authorized to add classes of employees to the Special Exposure Cohort. NIOSH will provide the claimant with any information and forms that HHS provides to classes of employees seeking to petition to be added to the Special Exposure Cohort.

§ 82.13 What sources of information may be used for dose reconstructions?

NIOSH will use the following sources of information for dose reconstructions, as necessary:

(a) DOE and its contractors, including Atomic Weapons Employers and the former worker medical screening program;

(b) NIOSH and other records from health research on DOE worker populations;

(c) Interviews and records provided by claimants;

(d) Co-workers of covered employees, or others with information relevant to the covered employee's exposure, that the claimant identified during the initial interview with NIOSH;

(e) Labor union records from unions representing employees at covered facilities of DOE or AWEs; and,

(f) Any other relevant information.

§ 82.14 What types of information could be used in dose reconstructions?

NIOSH will obtain the types of information described in this section for dose reconstructions, as necessary and available:

(a) *Subject and employment information,* including:

(1) Gender;

(2) Date of birth; and,

(3) DOE and/or AWE employment history, including: job title held by year, and work location(s): including site names(s), building numbers(s), technical area(s), and duration of relevant employment or tasks.

(b) *Worker monitoring data,* including:

(1) External dosimetry data, including external dosimeter readings (film badge, TLD, neutron dosimeters); and,

(2) Pocket ionization chamber data.

(c) *Internal dosimetry data,* including:

(1) Urinalysis results;

(2) Fecal sample results;

(3) In Vivo measurement results;

(4) Incident investigation reports;

(5) Breath radon and/or thoron results;

(6) Nasal smear results;

(7) External contamination measurements; and

(8) Other measurement results applicable to internal dosimetry.

(d) *Monitoring program data,* including:

(1) Analytical methods used for bioassay analyses;

(2) Performance characteristics of dosimeters for different radiation types;

(3) Historical detection limits for bioassay samples and dosimeter badges;

(4) Bioassay sample and dosimeter collection/exchange frequencies;

(5) Documentation of record keeping practices used to record data and/or administratively assign dose; and,

(6) Other information to characterize the monitoring program procedures and evaluate monitoring results.

(e) *Workplace monitoring data,* including:

(1) Surface contamination surveys;

(2) General area air sampling results;

(3) Breathing zone air sampling results;

(4) Radon and/or thoron monitoring results;

(5) Area radiation survey measurements (beta, gamma and neutron); and,

(6) Fixed location dosimeter results (beta, gamma and neutron); and,

(7) Other workplace monitoring results.

(f) *Workplace characterization data,* including:

(1) Information on the external exposure environment, including: radiation type (gamma, x-ray, proton, neutron, beta, other charged particle); radiation energy spectrum; uniformity of exposure (whole body vs partial body exposure); irradiation geometry;

(2) Information on work-required medical screening x rays; and,

(3) Other information useful for characterizing workplace radiation exposures.

(g) *Information characterizing internal exposures*, including:

(1) Radionuclide(s) and associated chemical forms;

(2) Results of particle size distribution studies;

(3) Respiratory protection practices; and

(4) Other information useful for characterizing internal exposures.

(h) *Process descriptions for each work location*, including:

(1) General description of the process;

(2) Characterization of the source term (i.e., the radionuclide and its quantity);

(3) Extent of encapsulation;

(4) Methods of containment;

(5) Other information to assess potential for irradiation by source or airborne dispersion radioactive material.

§ 82.15 How will NIOSH evaluate the completeness and adequacy of individual monitoring data?

(a) NIOSH will evaluate the completeness and adequacy of an individual's monitoring data provided by DOE through one or more possible measures including, but not limited to:

(1) Comparisons with information provided by claimants, co-workers, and other witnesses;

(2) Comparisons with available information on area monitoring, production processes, and radiologic protection programs;

(3) Comparisons with information documented in the records of unions representing covered employees;

(4) Comparisons with data available on co-workers; and

(5) Reviews of DOE contractor record systems.

(b) NIOSH will evaluate the instruments and procedures used to collect individual monitoring data to determine whether they adequately characterized the radiation environments in which the covered employee worked, (adequately for the purpose of dose reconstruction,) based on present-day scientific understanding. For external dosimeter measurements, this includes an evaluation of the dosimeter response to the radiation types (gamma, x-ray, neutron, beta, or other charged particle) and the associated energy spectrum. For internal exposure, the methods used to analyze bioassay samples will be reviewed to determine their ability to detect the radionuclides present in the work environment. An analysis of the monitoring or exchange frequencies for the monitoring programs will also be conducted to determine the potential for undetected dose.

§ 82.16 How will NIOSH add to monitoring data to remedy limitations of individual monitoring and missed dose?

(a) For external dosimeter results that are incomplete due to historical record keeping practices, NIOSH will use commonly practiced techniques, such as those described in the NIOSH Research Issues Workshop,[2] to estimate the missing component of dose and to add this to the total dose estimate. For monitoring periods where external dosimetry data are missing from the records, NIOSH will estimate a claimant's dose based on interpolation, using available monitoring results from other time periods close to the period in question, or based on monitoring data on other workers engaged in similar tasks.

(b) NIOSH will review historical bioassay sample detection limits and monitoring frequencies to determine, when possible, the minimum detectable dose for routine internal dose monitoring programs. This ''missed dose'' will establish the upper limit of internal dose that a worker could have received for periods when bioassay sample analysis results were below the detection limit. Using ICRP biokinetic models, NIOSH will estimate the internal dose and include an associated uncertainty distribution.

[2] NIOSH [1995]. NIOSH research issues workshop: epidemiologic use of nondetectable values in radiation exposure measurements. Cincinnati, OH: U.S. Department of Health and Human Services, Public Health Service, Centers for Disease Control and Prevention, National Institute for Occupational Safety and Health, DHHS (NIOSH) Publication No. 224647 (NTIS—PB 95189601).

§ 82.17 What types of information could be used to supplement or substitute for individual monitoring data?

Three types of information could be used:

(a) Monitoring data from co-workers, if NIOSH determines they had a common relationship to the radiation environment; or,

(b) A quantitative characterization of the radiation environment in which the covered employee worked, based on an analysis of historical workplace monitoring information such as area dosimeter readings, general area radiation and radioactive contamination survey results, air sampling data; or,

(c) A quantitative characterization of the radiation environment in which the employee worked, based on analysis of data describing processes involving radioactive materials, the source materials, occupational tasks and locations, and radiation safety practices.

§ 82.18 How will NIOSH calculate internal dose to the primary cancer site(s)?

(a) The calculation of dose from ingested, inhaled or absorbed radioactivity involves the determination of the types and quantities of radionuclides that entered the body. NIOSH will use the results of all available bioassay monitoring information as appropriate, based on assessment of the technical characteristics of the monitoring program. If bioassay monitoring data are unavailable or inadequate, the dose reconstruction will rely on the results of air sampling measurements, radiation sources, work processes and practices, and incidents involving radiation contamination, as necessary.

(b) NIOSH will calculate the dose to the organ or tissue of concern using the appropriate current metabolic models published by ICRP. Using data available to NIOSH, the models will be based on exposure conditions representative of the work environment. When NIOSH cannot establish exposure conditions with sufficient specificity, the dose calculation will assume exposure conditions that maximize the dose to the organ under consideration. When the cancer covered by a claim is in a tissue not covered by existing ICRP models, NIOSH will use the ICRP model that best approximates the model needed, while giving the benefit of the doubt to the claimant. For internal exposures, NIOSH will select the highest dose estimate from among the modeled organs or tissues that do not concentrate the radionuclide.

(c) Internal doses will be calculated for each year of exposure from the date of initial exposure to the date of cancer diagnosis.

§ 82.19 How will NIOSH address uncertainty about dose levels?

The estimate of each annual dose will be characterized with a probability distribution that accounts for the uncertainty of the estimate. This information will be used by DOL in the calculation of probability of causation, under HHS guidelines for calculating probability of causation estimates at 42 CFR 81. In this way, claimants will receive the benefit of the doubt in cases in which the actual dose may have exceeded the best estimate calculated by NIOSH.

Subpart D—Reporting and Review of Dose Reconstruction Results

§ 82.25 When will NIOSH report dose reconstruction results, and to whom?

NIOSH will report dose reconstruction results to DOL and to the claimant, as provided for under § 82.10. Draft results will be reported to the claimant upon tentative completion of the dose reconstruction. Final results will be reported to the claimant, DOL and DOE after NIOSH receives certification from the claimant that the claimant has completed providing information to NIOSH for the dose reconstruction (Form OCAS–1).

§ 82.26 How will NIOSH report dose reconstruction results?

(a) NIOSH will provide dose reconstruction results to the claimant, DOL, and DOE in a report: ''NIOSH Report of Dose Reconstruction under EEOICPA.'' The report itself will not provide information on probability of causation, which DOL must calculate to determine a recommended decision on the claim.

(b) The report will include the following information, as relevant:

(1) Annual dose estimates (or a fraction thereof) related to covered employment for each year from the date of initial radiation exposure at a covered facility to the date of cancer diagnosis;

(2) Separate dose estimates for acute and chronic exposures, different types of ionizing radiation, and internal and external doses, providing internal dose information only for the organ or tissue relevant to the primary cancer site(s) established in the claim;

(3) Uncertainty distributions associated with each dose estimated, as necessary;

(4) Explanation of each type of dose estimate included in terms of its relevance for estimating probability of causation;

(5) Identification of any information provided by the claimant relevant to dose estimation that NIOSH decided to omit from the basis for dose reconstruction, justification for the decision, and if possible, a quantitative estimate of the effect of the omission on the dose reconstruction results; and

(6) A summary and explanation of information and methods applied to produce the dose reconstruction estimates, including any factual findings and the evidence upon which those findings are based.

(c) As provided under § 82.10(l), NIOSH staff will conduct a closing interview with claimants to explain the dose reconstruction report.

§ 82.27 How can claimants obtain reviews of their NIOSH dose reconstruction results by NIOSH?

(a) Claimants can seek reviews of their dose reconstruction through the processes established by DOL under 20 CFR 30. DOL will request NIOSH to review dose reconstructions under the following conditions, as provided under 20 CFR 30.318:

(1) DOL may determine that factual findings of the dose reconstruction do not appear to be supported by substantial evidence; or,

(2) Although the methodology established by HHS under this Part is binding on DOL, DOL may determine that arguments concerning the *application* of this methodology should be considered by NIOSH.

(b) NIOSH may review completed dose reconstructions on its own initiative and with the assistance of DOL to identify denied claims when either of the following circumstances arise:

(1) NIOSH obtains records or information on radiation exposures of DOE or AWE employees that could substantially increase the level of radiation doses estimated in the completed dose reconstructions; or

(2) NIOSH changes a scientific element underlying dose reconstructions according to the provisions of Subpart E of this rule and the change could substantially increase the level of radiation doses estimated in the completed dose reconstructions.

(c) When NIOSH completes the review of a dose reconstruction, NIOSH will provide a report describing the basis for the review, the methods employed in the review, and the review findings to the claimant, DOL, and DOE.

§ 82.28 Who can review NIOSH dose reconstruction files on individual claimants?

(a) Claimants and DOL will be provided individual dose reconstruction files, upon request. Claimants should note, however, that a complete summary of the data and methods used in a dose reconstruction will be included in the ''NIOSH Report of Dose Reconstruction under EEOICPA''.

(b) Researchers and the public will be provided limited access to NIOSH dose reconstruction files, subject to provisions and restrictions of the Privacy Act for the protection of confidential information on individuals.

Subpart E—Updating the Scientific Elements Underlying Dose Reconstructions

§ 82.30 How will NIOSH inform the public of any plans to change scientific elements underlying the dose reconstruction process to maintain methods reasonably current with scientific progress?

Periodically, NIOSH will publish a notice in the FEDERAL REGISTER notifying the public of plans to change scientific elements underlying the dose reconstruction process under EEOICPA to reflect scientific progress. Notice will include a summary of the planned changes and the expected completion date for such changes.

§ 82.31 How can the public recommend changes to scientific elements underlying the dose reconstruction process?

(a) At any time, the public can submit written recommendations to NIOSH for changes to scientific elements underlying the dose reconstruction process, based on relevant new research findings and technological advances. NIOSH will provide these recommendations to the Advisory Board on Radiation and Worker Health to be addressed at a public meeting of the Advisory Board, with notification provided to the source of the recommendations. Recommendations should be addressed to: Director, Office of Compensation Analysis and Support, National Institute for Occupational Safety and Health, 4676 Columbia Parkway, MS-R45, Cincinnati, Ohio 45226.

(b) The public can also submit recommendations by e-mail. Instructions will be provided on the NIOSH Internet homepage at *www.cdc.gov/niosh/ocas*.

§ 82.32 How will NIOSH make changes in scientific elements underlying the dose reconstruction process, based on scientific progress?

NIOSH will present proposed changes to the Advisory Board on Radiation and Worker Health prior to implementation. These proposed changes will be summarized in a notice published in the FEDERAL REGISTER. The public will have the opportunity to comment on proposed changes at the meeting of the Advisory Board and/or in written comments submitted for this purpose. NIOSH will fully consider the comments of the Advisory Board and of the public before deciding upon any changes.

§ 82.33 How will NIOSH inform the public of changes to the scientific elements underlying the dose reconstruction process?

(a) NIOSH will publish a notice in the FEDERAL REGISTER informing the public of changes and the rationale for the changes. This notice will also provide a summary of the recommendations and comments received from the Advisory Board and the public, as well as responses to the comments.

(b) NIOSH may take into account other factors and employ other procedures than those specified in this subpart, if circumstances arise that require NIOSH to implement a change more immediately than the procedures in this subpart allow.

PART 83—PROCEDURES FOR DESIGNATING CLASSES OF EMPLOYEES AS MEMBERS OF THE SPECIAL EXPOSURE COHORT UNDER THE ENERGY EMPLOYEES OCCUPATIONAL ILLNESS COMPENSATION PROGRAM ACT OF 2000

Subpart A—Introduction

Sec.
83.0 Background information on the procedures in this part.
83.1 What is the purpose of the procedures in this part?
83.2 How will DOL use the designations established under the procedures in this part?

Subpart B—Definitions

83.5 Definitions of terms used in the procedures in this part.

Subpart C—Procedures for Adding Classes of Employees to the Cohort

83.6 Overview of the procedures in this part.
83.7 Who can submit a petition on behalf of a class of employees?
83.8 How is a petition submitted?
83.9 What information must a petition include?
83.10 If a petition satisfies all relevant requirements under § 83.9, does this mean the class will be added to the Cohort?

83.11 What happens to petition submissions that do not satisfy all relevant requirements under §§ 83.7 through 83.9?
83.12 How will NIOSH notify petitioners, the Board, and the public of petitions that have been selected for evaluation?
83.13 How will NIOSH evaluate petitions, other than petitions by claimants covered under § 83.14?
83.14 How will NIOSH evaluate a petition by a claimant whose dose reconstruction NIOSH could not complete under 42 CFR Part 82?
83.15 How will the Board consider and advise the Secretary on a petition?
83.16 How will the Secretary decide the outcome of a petition?
83.17 How will the Secretary report a final decision to add a class of employees to the Cohort and any action of Congress concerning the effect of the final decision?
83.18 How can petitioners obtain an administrative review of a final decision by the Secretary?
83.19 How can the Secretary cancel or modify a final decision to add a class of employees to the Cohort?

AUTHORITY: 42 U.S.C. 7384q; E.O. 13179, 65 FR 77487, 3 CFR, 2000 Comp., p. 321.

SOURCE: At 69 FR 30780, May 28, 2004, unless otherwise noted.

Subpart A—Introduction

§ 83.0 Background information on the procedures in this part.

The Energy Employees Occupational Illness Compensation Program Act, as amended (''EEOICPA'' or ''the Act''), 42 U.S.C. 7384–7385, provides for the payment of compensation benefits to covered employees and, where applicable, survivors of such employees, of DOE, its predecessor agencies and certain of its contractors and subcontractors. Among the types of illnesses for which compensation may be provided are cancers. There are two methods set forth in the statute for claimants to establish that a cancer incurred by a covered worker is compensable under EEOICPA. The first is to establish that the cancer is at least as likely as not related to covered employment at a DOE or Atomic Weapons Employer (''AWE'') facility pursuant to guidelines issued by the Department of Health and Human Services (''HHS''), which are found at 42 CFR part 81. The second method to establish that a cancer incurred by a covered worker is compensable under EEOICPA is to establish that the worker is a member of the Special Exposure Cohort (''the Cohort'') and suffered a specified cancer after beginning employment at a DOE facility or AWE facility. In Section 3621(14) of EEOICPA (42 U.S.C. 7384l(14)) Congress included certain classes of employees in the Cohort. Section 3626 of the Act (42 U.S.C. 7384q) authorizes the addition to the Cohort of other classes of employees. This authority has been delegated to the Secretary of HHS by Executive Order 13179.

§ 83.1 What is the purpose of the procedures in this part?

EEOICPA authorizes the President to add classes of employees to the Cohort, while providing Congress with the opportunity to review and expedite or reverse these decisions. The President delegated his authority to the Secretary of HHS. This part specifies the procedures by which HHS will determine whether to add new classes of employees from DOE and AWE facilities to the Cohort. HHS will consider adding new classes of employees in response to petitions by, or on behalf of, such classes of employees. The procedures specify requirements for petitions and for their consideration. These requirements are intended to ensure that petitions are submitted by authorized parties, are justified, and receive uniform, fair, scientific consideration. The procedures are also designed to give petitioners and interested parties opportunity for appropriate involvement in the process, and to ensure that the process is timely and consistent with requirements specified in EEOICPA. The procedures are not intended to provide a second opportunity to qualify a claim for compensation, once HHS has completed the dose reconstruction and DOL has determined that the cancer subject to the claim was not ''at least as likely as not'' caused by the estimated radiation doses. DOL has established procedures separate from those covered by this part, under 20 CFR part 30, for cancer claimants who want to contest the factual determinations or how NIOSH conducted their dose reconstructions.

§ 83.2 How will DOL use the designations established under the procedures in this part?

DOL will adjudicate compensation claims for members of classes of employees added to the Cohort according to the same general procedures that apply to the statutorily defined classes of employees in the Cohort. Specifically, DOL will determine whether the claim is for a qualified member of the Cohort with a specified cancer, pursuant to the procedures set forth in 20 CFR part 30.

Subpart B—Definitions

§ 83.5 Definitions of terms used in the procedures in this part.

(a) *Advisory Board on Radiation and Worker Health (''the Board'')* is a federal advisory committee established under EEOICPA and appointed by the President to advise HHS in implementing its responsibilities under EEOICPA.

(b) *Atomic Weapons Employer (''AWE'')* is a statutory term of EEOICPA which means any entity, other than the United States, that:

(1) Processed or produced, for use by the United States, material that emitted radiation and was used in the production of an atomic weapon, excluding uranium mining and milling: and,

(2) Is designated by the Secretary of Energy as an atomic weapons employer for purposes of EEOICPA.

(c) *Computation of Time Periods:* In this Rule, all prescribed or allowed time periods will be counted as calendar days from the business day of receipt by the submitter(s), the petitioner(s), NIOSH, or HHS. Receipt by NIOSH, the submitter(s) or petitioner(s) will be either the business day of actual receipt or three (3) business days after initial proof of mailing, whichever time period is shorter. Business days are defined as Monday through Friday, 8 a.m. to 4:30 p.m. est and ''legal holiday'' will be used as defined by the FED. R. CIV. P. 6(a).

(d) *Class of employees* means, for the purposes of this part, a group of employees who work or worked at the same DOE facility or AWE facility, and for whom the availability of information and recorded data on radiation exposures is comparable with respect to the informational needs of dose reconstructions conducted under 42 CFR part 82.

(e) *HHS* is the U.S. Department of Health and Human Services.

(f) *DOE* is the U.S. Department of Energy, which includes predecessor agencies of DOE, including the Manhattan Engineering District.

(g) *DOL* is the U.S. Department of Labor.

(h) *Employee*, for the purposes of these procedures, means a person who is or was, for the purposes of EEOICPA, an employee of DOE, a DOE contractor or subcontractor, or an Atomic Weapons Employer.

(i) *NIOSH* is the National Institute for Occupational Safety and Health, Centers for Disease Control and Prevention, U.S. Department of Health and Human Services.

(j) *OCAS* is the Office of Compensation Analysis and Support, National Institute for Occupational Safety and Health, Centers for Disease Control and Prevention, U.S. Department of Health and Human Services.

(k) *Petitioner* means an individual or organization that submits a petition on behalf of a class of employees and qualifies as a petitioner under § 83.7. A single petition shall only include up to three petitioners.

(l) *Radiation* means ionizing radiation, including alpha particles, beta particles, gamma rays, x rays, neutrons, protons and other particles capable of producing ions in the body. For the purposes of the proposed procedures, radiation does not include sources of non-ionizing radiation such as radio-frequency radiation, microwaves, visible light, and infrared or ultraviolet light radiation.

(m) *Secretary* is the Secretary of Health and Human Services.

(n) *Specified cancer*, as is defined in Section 3621(17) of EEOICPA (42 U.S.C. 7384l(17)) and the DOL regulation implementing EEOICPA (20 CFR 30.5(dd)), means:

(1) Leukemia (other than chronic lymphocytic leukemia) provided that onset of the disease was at least two years after initial occupational exposure;

(2) Lung cancer (other than in situ lung cancer that is discovered during or after a post-mortem exam);

(3) Bone cancer;

(4) Renal cancers;

(5) The following diseases, provided onset was at least 5 years after first exposure:

(i) Multiple myeloma;

(ii) Lymphomas (other than Hodgkin's disease);

(iii) Primary cancer of the:

(A) Thyroid;

(B) Male or female breast;

(C) Esophagus;

(D) Stomach;

(E) Pharynx;

(F) Small intestine;

(G) Pancreas;

(H) Bile ducts;

(I) Gall bladder;

(J) Salivary gland;

(K) Urinary bladder;

(L) Brain;

(M) Colon;

(N) Ovary;

(O) Liver (except if cirrhosis or hepatitis B is indicated).

(6) The specified diseases designated in this section mean the physiological condition or conditions that are recognized by the National Cancer Institute under those names or nomenclature, or under any previously accepted or commonly used names or nomenclature.

(o) Survivor means a surviving spouse, child, parent, grandchild and grandparent of a deceased covered employee as defined in EEOICPA.

[69 FR 30780, May 28, 2004, as amended at 70 FR 75952, Dec. 22, 2005; 72 FR 37459, July, 10, 2007]

Subpart C—Procedures for Adding Classes of Employees to the Cohort

§ 83.6 Overview of the procedures in this part.

The procedures in this part specify who may petition to add a class of employees to the Cohort, the requirements for such a petition, how a petition will be selected for evaluation by NIOSH and for the advice of the Board, and the process NIOSH, the Board, and the Secretary will use to consider a petition, leading to the Secretary's final determination to accept or deny adding a class to the Cohort. The rule provides for petitions in two distinct circumstances. One circumstance is when NIOSH has attempted to conduct a dose reconstruction for a cancer claimant, under 42 CFR part 82, and finds that the dose reconstruction cannot be completed, because there is insufficient information to estimate the radiation doses of the claimant with sufficient accuracy. The second circumstance includes all other possibilities. For example, a petition may be submitted representing a class of employees whose members have yet to file claims under EEOICPA, or even have yet to be diagnosed with cancer. As required by EEOICPA (42 U.S.C. 7384l(14)(c)(ii)), the procedures in this part include formal notice to Congress of any decision by the Secretary to add a class to the Cohort, and the opportunity for Congress to expedite or change the outcome of the decision within 180 days.

§ 83.7 Who can submit a petition on behalf of a class of employees?

A petitioner or petitioners for a petition must be one or more, up to a maximum of three, of the following:

(a) One or more DOE, DOE contractor or subcontractor, or AWE employees, who would be included in the proposed class of employees, or their survivors; or

(b) One or more labor organizations representing or formerly having represented DOE, DOE contractor or subcontractor, or AWE employees, who would be included in the proposed class of employees; or

(c) One or more individuals or entities authorized in writing by one or more DOE, DOE contractor or subcontractor, or AWE employees, who would be included in the proposed class of employees, or their survivors.

§ 83.8 How is a petition submitted?

The petitioner(s) must send a petition in writing to NIOSH. A petition must provide identifying and contact information on the petitioner(s) and information to justify the petition, as specified under § 83.9. Detailed instructions for preparing and submitting a petition, including an optional petition form, are available from NIOSH through direct request (1–800–35–

NIOSH) or on the Internet at *www.cdc.gov/niosh/ocas*.

§ 83.9 What information must a petition include?

(a) All petitions must provide identifying and contact information on the petitioner(s). The information required to justify a petition differs, depending on the basis of the petition. If the petition is by a claimant in response to a finding by NIOSH that the dose reconstruction for the claimant cannot be completed, then the petition must provide only the justification specified under paragraph (b) of this section. All other petitions must provide only the information specified under paragraph (c) of this section. The informational requirements for petitions are also summarized in Table 1 at the end of this section.

(b) The petition must notify NIOSH that the claimant is petitioning on the basis that NIOSH found, under 42 CFR 82.12, that the dose reconstruction for the claimant could not be completed due to insufficient records and information.

(c) The petition must include the following:

(1) A proposed class definition[1] specifying:

(i) The DOE facility or AWE facility[2] at which the class worked;

(ii) The location or locations at the facility covered by the petition (e.g., building, technical area);

(iii) The job titles and/or job duties of the class members;

(iv) The period of employment relevant to the petition;

(v) Identification of any exposure incident that was unmonitored, unrecorded, or inadequately monitored or recorded, if such incident comprises the basis of the petition; and

(2) A description of the petitioner's (petitioners'') basis for believing records and information available are inadequate to estimate the radiation doses incurred by members of the proposed class of employees with sufficient accuracy. This description must include one of the following elements:

(i) Documentation or statements provided by affidavit indicating that radiation exposures and doses to members of the proposed class were not monitored, either through personal or area monitoring; or

(ii) Documentation or statements provided by affidavit indicating that radiation monitoring records for members of the proposed class have been lost, falsified, or destroyed; or

(iii) A report from a health physicist or other individual with expertise in dose reconstruction documenting the limitations of existing DOE or AWE records on radiation exposures at the facility, as relevant to the petition. This report should specify the basis for believing these documented limitations might prevent the completion of dose reconstructions for members of the class under 42 CFR part 82 and related NIOSH technical implementation guidelines; or

(iv) A scientific or technical report, published or issued by a government agency of the Executive Branch of government or the General Accounting Office, the Nuclear Regulatory Commission, or the Defense Nuclear Facilities Safety Board, or published in a peer-reviewed journal, that identifies dosimetry and related information that are unavailable (due to either a lack of monitoring or the destruction or loss of records) for estimating the radiation doses of employees covered by the petition.

(3) If the petition is based on an exposure incident as described under paragraph (c)(1)(v) of this section, the petitioner(s) might be required to provide evidence that the incident occurred, but only if NIOSH is unable to obtain records or confirmation of the occurrence of such an incident from sources independent of the petitioner(s). Such evidence would not be required at the time the petition is submitted and the

[1] HHS will determine the final class definition(s) for each petition (see § 83.16).

[2] Depending on the factual circumstances present, a facility that meets the definition of an AWE facility or DOE facility covered under EEOICPA (42 U.S.C. 7384l(5) and (12)) could, among other possibilities, constitute a single building or structure, including the grounds upon which it is located, or a site encompassing numerous buildings or structures, including the grounds upon which it is located.

petitioner(s) would be directly informed of the need for this supplemental information. In such cases, either of the following may qualify as evidence:

(i) Medical evidence that one or more members of the class may have incurred a high level radiation dose from the incident, such as a depressed white blood cell count associated with radiation exposure or the application of chelation therapy; or

(ii) NIOSH will consider evidence provided by affidavit from one or more employees who witnessed the incident. If the petitioner cannot provide such affidavits because such employees are deceased, prevented by reasons of poor health or impairment, or cannot be identified or located, then the requirement for evidence provided by affidavit can be met by providing such an affidavit from one or more individuals who did not witness the incident, provided the individual was directly informed by one or more employees who witnessed the incident.[3]

(4) The provision of any evidence under this section or other provisions of this part, including one or more affidavits, would not, in and of itself, be sufficient to confirm the facts presented by that evidence. NIOSH will consider the adequacy and credibility of any evidence provided.

(5) If, under § 83.15(a), NIOSH has already issued a FEDERAL REGISTER notice scheduling a Board meeting to consider a petition concerning a class of employees, then any petitions for such a class of employees submitted following this notice must, under paragraph (c)(2) of this section, present substantially new information that has not already been considered by NIOSH. For this purpose, NIOSH would find that information has been already considered by NIOSH if it were included in the petition(s) that were already considered by NIOSH or if it were addressed either in the report(s) by NIOSH evaluating such a petition or petitions under § 83.13(c) or in a proposed decision by NIOSH responding to such a petition or petitions under § 83.16(a).

TABLE 1 FOR § 83.9: SUMMARY OF INFORMATIONAL REQUIREMENTS FOR ALL PETITIONS

[Petitioner(s) must submit identifying and contact information and either A. or B. of this table.]

A. The claimant's authorization of the petition, based on NIOSH having found it could not complete a dose reconstrucitn for the claimant submitting the petition; or.	B. (1) A proposed class definition identifying: (i) Facility, (ii) relevant locations at the facility; (iii) job titles/duties, (iv) period of employment, and if relevant, (v) exposure incident. (2) The basis for infeasibility of dose reconstruction; either: (i) lack of monitoring; or (ii) destruction, falsification, or loss of records; or (iii) expert report; or (iv) scientific or technical report.

§ 83.10 If a petition satisfies all relevant requirements under § 83.9, does this mean the class will be added to the Cohort?

Satisfying the informational requirements for a petition does not mean the class will be added to the Cohort. It means the petition will receive a full evaluation by NIOSH, the Board, and HHS, as described under §§ 83.13 through 83.16. The role of the petitioner(s) is to identify classes of employees that should be considered for addition to the Cohort.

[3] An affidavit may be from a petitioner but HHS does not require that an affidavit be from a petitioner.

§ 83.11 What happens to petitions that do not satisfy all relevant requirements under §§ 83.7 through 83.9?

(a) NIOSH will notify the petitioner(s) of any requirement that is not met by the petition, assist the petitioner(s) with guidance in developing relevant information, and provide 30 calendar days for the petitioner(s) to revise the petition accordingly.

(b) After 30 calendar days from the date of notification under paragraph (a) of this section, NIOSH will notify any petitioner(s) whose petition remains unsatisfactory of the proposed finding of NIOSH that the petition fails to meet the specified requirements and the basis for this finding.

(c) A petitioner may request in writing a review of a proposed finding within 30 calendar days of notification under paragraph (b) of this section. Petitioners must specify why the proposed finding should be reversed, based on the petition requirements and on the information that the petitioners had already submitted. The request may not include any new information or documentation that was not included in the completed petition. If the petitioner obtains new information within this 30-day period, the petitioner should provide it to NIOSH. NIOSH will consider this new information as a revision of the petition under paragraph (a) of this section.

(d) Three HHS personnel, appointed by the Director of NIOSH, who were not involved in developing the proposed finding will complete reviews within 30 work days of the request for such a review. The Director of NIOSH will consider the results of the review and then make a final decision as to whether the petition satisfies the requirements for a petition.

(e) Proposed findings established by NIOSH under paragraph (b) of this section will become final decisions in 31 calendar days if not reviewed under paragraph (d) of this section.

(f) Based on new information, NIOSH may, at its discretion, reconsider a decision that a petition does not satisfy the requirements for a petition.

(g) A petitioner whose petition has been found not to satisfy the requirements for a petition under either paragraph (d) or (e) of this section may submit to NIOSH a new petition for the identical class of employees at any time thereafter on the basis of new information not provided to NIOSH in the original petition. In such a case, the petitioner is required to fully readdress all the requirements of §§ 83.7–83.9 in the petition.

[70 FR 75952, Dec. 22, 2005, as amended at 72 FR 37459, July 10, 2007]

§ 83.12 How will NIOSH notify petitioners, the Board, and the public of petitions that have been selected for evaluation?

(a) NIOSH will notify the petitioner(s) in writing that it has selected the petition for evaluation. NIOSH will also provide the petitioner(s) with information on the steps of the evaluation and other processes required pursuant to these procedures.

(b) NIOSH will combine separate petitions and evaluate them as a single petition if, at this or at any point in the evaluation process under §§ 83.13 and 83.14, NIOSH finds such petitions represent the same class of employees.

(c) NIOSH will present petitions selected for evaluation to the Board with plans specific to evaluating each petition. Each evaluation plan will include the following elements:

(1) An initial proposed definition for the class being evaluated, subject to revision as warranted by the evaluation conducted under § 83.13 or § 83.14; and

(2) A list of activities for evaluating the radiation exposure potential of the class and the adequacy of existing records and information needed to conduct dose reconstructions for all class members under 42 CFR part 82.

(d) NIOSH may initiate work to evaluate a petition immediately, prior to presenting the petition and evaluation plan to the Board.

(e) NIOSH will publish a notice in the FEDERAL REGISTER notifying the public of its decision to evaluate a petition.

§ 83.13 How will NIOSH evaluate petitions, other than petitions by claimants covered under § 83.14?

(a) NIOSH will collect information on the types and levels of radiation exposures that potential members of the class may have incurred, as specified

under 42 CFR 83.14, from the following potential sources, as necessary:

(1) The petition or petitions submitted on behalf of the class;

(2) DOE and AWE facility records and information;

(3) Potential members of the class and their survivors;

(4) Labor organizations who represent or represented employees at the facility during the relevant period of employment;

(5) Managers, radiation safety officials, and other witnesses present during the relevant period of employment at the DOE facility or AWE facility;

(6) NIOSH records from epidemiological research on DOE populations and records from dose reconstructions conducted under 42 CFR part 82;

(7) Records from research, dose reconstructions, medical screening programs, and other related activities conducted to evaluate the health and/or radiation exposures of DOE employees, DOE contractor or subcontractor employees, and/or AWE employees; and

(8) Other sources.

(b) The Director of OCAS may determine that records and/or information requested from DOE, an AWE, or another source to evaluate a petition is not, or will not be, available on a timely basis. Such a determination will be treated, for the purposes of the petition evaluation, as equivalent to a finding that the records and/or information requested are not available.

(1) Before the Director of OCAS makes such a determination, the source(s) potentially in possession of such records and/or information will be allowed a reasonable amount of time, as determined by the Director of OCAS, to provide the records and/or information.

(2) Such a determination may take into account the types and quantity of records and/or information requested from the source, as well as any other factors that might be relevant to the judgment under paragraph (b)(1) of this this section of the amount of time that is reasonable to provide the records and/or information, which would be decided on a case-by-case basis by the Director of OCAS.

(c) NIOSH will evaluate records and information collected to make the following determinations:

(1) *Is it feasible to estimate the level of radiation doses of individual members of the class with sufficient accuracy?* (i) Radiation doses can be estimated with sufficient accuracy if NIOSH has established that it has access to sufficient information to estimate the maximum radiation dose, for every type of cancer for which radiation doses are reconstructed, that could have been incurred in plausible circumstances by any member of the class, or if NIOSH has established that it has access to sufficient information to estimate the radiation doses of members of the class more precisely than an estimate of the maximum radiation dose. NIOSH must also determine that it has information regarding monitoring, source, source term, or process from the site where the employees worked to serve as the basis for a dose reconstruction. This basis requirement does not limit NIOSH to using only or primarily information from the site where the employee worked, but a dose reconstruction must, as a starting point, be based on some information from the site where the employee worked.

(ii) In many circumstances, to establish a positive finding under paragraph (c)(1)(i) of this section would require, at a minimum, that NIOSH have access to reliable information on the identity or set of possible identities and maximum quantity of each radionuclide (the radioactive source material) to which members of the class were potentially exposed without adequate protection. Alternatively, if members of the class were potentially exposed without adequate protection to unmonitored radiation from radiation generating equipment (e.g., particle accelerator, industrial x-ray equipment), in many circumstances, NIOSH would require relevant equipment design and performance specifications or information on maximum emissions.

(iii) In many circumstances, to establish a positive finding under paragraph (c)(1)(i) of this section would also require information describing the process through which the radiation exposures of concern may have occurred

and the physical environment in which the exposures may have occurred.

(iv) In many circumstances, access to personal dosimetry data and area monitoring data is not necessary to estimate the maximum radiation doses that could have been incurred by any member of the class, although radiation doses can be estimated more precisely with such data.

(2) *How should the class be defined, consistent with the findings of the analysis discussed under paragraph (c)(1) of this section?* NIOSH will define the following characteristics of a class, taking into account the class definition proposed by the petition and modified as necessary to reflect the results of the evaluation under paragraph (c)(1) of this section:

(i) Any of the following employment parameters, as necessary to identify members included in the class: facility, job titles, duties, and/or specific work locations at the facility, the relevant time period, and any additional identifying characteristics of employment; and

(ii) If applicable, the identification of an exposure incident, when unmonitored radiation exposure during such an incident comprises the basis of the petition or the class definition.

(3) *Is there a reasonable likelihood that such radiation dose may have endangered the health of members of the class?* If it is not feasible to estimate with sufficient accuracy radiation doses for members of the class, as provided under paragraph (c)(1) of this section, then NIOSH must determine, as required by the statute, that *''there is a reasonable likelihood that such radiation dose may have endangered the health of members of the class''* (42 U.S.C. 7384q(b)(2)).

(i) For classes of employees that may have been exposed to radiation during discrete incidents likely to have involved exceptionally high level exposures, such as nuclear criticality incidents or other events involving similarly high levels of exposures resulting from the failure of radiation protection controls, NIOSH will assume for the purposes of this section that any duration of unprotected exposure could cause a specified cancer, and hence may have endangered the health of members of the class. Presence with potential exposure during the discrete incident, rather than a quantified duration of potential exposure, will satisfy the health endangerment criterion.

(ii) For health endangerment not established on the basis of a discrete incident, as described under paragraph (c)(3)(i) of this section, NIOSH will specify a minimum duration of employment to satisfy the health endangerment criterion as having been employed for a number of work days aggregating at least 250 work days within the parameters established for the class or in combination with work days within the parameters established for one or more other classes of employees in the Cohort.

(d) NIOSH will submit a report of its evaluation findings to the Board and to the petitioner(s). The report will include the following elements:

(1) An identification of the relevant petitions;

(2) A proposed definition of the class or classes of employees to which the evaluation applies, and a summary of the basis for this definition, including, as necessary:

(i) Any justification that may be needed for the inclusion of groups of employees who were not specified in the original petition(s);

(ii) The identification of any groups of employees who were identified in the original petition(s) who should constitute a separate class of employees; or

(iii) The merging of multiple petitions that represent a single class of employees;

(3) The proposed class definition will address the following employment parameters:

(i) The DOE facility or the AWE facility that employed the class;

(ii) The job titles and/or job duties and/or work locations of class members;

(iii) The period of employment within which a class member must have been employed at the facility under the job titles and/or performing the job duties and/or working in the locations specified in this class definition;

(iv) If applicable, identification of an exposure incident, when potential radiation exposure during such an incident

comprises the basis of the class definition;

(v) If necessary, any other parameters that serve to define the membership of the class; and

(vi) For a class for which it is not feasible to estimate radiation doses with sufficient accuracy, a minimum duration of employment within the parameters of the class for inclusion in the class, as defined under paragraph (c)(3) of this section;

(4) A summary of the findings concerning the adequacy of existing records and information for reconstructing doses for individual members of the class under the methods of 42 CFR part 82 specifying, for each class defined in the report, whether NIOSH finds that it is feasible to estimate the radiation doses of members of the class with sufficient accuracy, and a description of the evaluation methods and information upon which these findings are based; and

(5) For a class for which it is not feasible to estimate radiation doses with sufficient accuracy, a summary of the basis for establishing the duration of employment requirement with respect to health endangerment.

(e) The NIOSH report under paragraph (d) of this section shall be completed within 180 calendar days of the receipt of the petition by NIOSH. The procedure for computing this time period is specified in § 83.5(c). In addition, the computing of 180 calendar days shall not include any days during which the petitioner may be revising the petition to remedy deficiencies identified by NIOSH under § 83.11(a) or (b), nor shall it include any days during which the petitioner may request a review of a proposed finding under § 83.11(c) or during the conduct of such a review under § 83.11(d).

[69 FR 30780, May 28, 2004, as amended at 72 FR 37459, July 10, 2007]

§ 83.14 How will NIOSH evaluate a petition by a claimant whose dose reconstruction NIOSH could not complete under 42 CFR part 82?

(a) NIOSH may establish two classes for evaluation, to permit the timely adjudication of the existing cancer claim:

(1) A class of employees defined using the research and analyses already completed in attempting the dose reconstruction for the employee identified in the claimant's petition; and

(2) A class of co-workers similar to the class defined under paragraph (a)(1) of this section, to be defined by NIOSH on the basis of further research and analyses, using the procedures under § 83.13.

(b) NIOSH will determine the health endangerment criteria for adding the class under paragraph (a)(1) of this section to the Cohort, using the procedures under § 83.13. NIOSH will report to the Board and to petitioner(s) the results of this determination, together with its finding under 42 CFR part 82 that there was insufficient information to complete the dose reconstruction. HHS will consider this finding under 42 CFR part 82 sufficient, without further consideration, to determine that it is not feasible to estimate the levels of radiation doses of individual members of the class with sufficient accuracy.

(c) NIOSH will evaluate the petition as it may concern a class of co-workers, as described under paragraph (a)(2) of this section, according to the procedures under § 83.13.

§ 83.15 How will the Board consider and advise the Secretary on a petition?

(a) NIOSH will publish a notice in the FEDERAL REGISTER providing notice of a Board meeting at which a petition will be considered, and summarizing the petition to be considered by the Board at the meeting and the findings of NIOSH from evaluating the petition.

(b) The Board will consider the petition and the NIOSH evaluation report at the meeting, to which the petitioner(s) will be invited to present views and information on the petition and the NIOSH evaluation findings. In considering the petition, both NIOSH and the members of the Board will take all steps necessary to prevent the disclosure of information of a personal nature, concerning the petitioners or others, where disclosure would constitute a clearly unwarranted invasion of personal privacy.

(c) In considering the petition, the Board may obtain and consider additional information not addressed in the petition or the initial NIOSH evaluation report.

(d) NIOSH may decide to further evaluate a petition, upon the request of the Board. If NIOSH conducts further evaluation, it will report new findings to the Board and the petitioner(s).

(e) Upon the completion of NIOSH evaluations and deliberations of the Board concerning a petition, the Board will develop and transmit to the Secretary a report containing its recommendations. The Board's report will include the following:

(1) The identification and inclusion of the relevant petition(s);

(2) The definition of the class of employees covered by the recommendation;

(3) A recommendation as to whether or not the Secretary should designate the class as an addition to the Cohort;

(4) The relevant criteria under § 83.13(c) and findings and information upon which the recommendation is based, including NIOSH evaluation reports, information provided by the petitioners, any other information considered by the Board, and the deliberations of the Board.

§ 83.16 How will the Secretary decide the outcome(s) of a petition?

(a) The Director of NIOSH will propose a decision to add or deny adding any class or classes of employees to the Cohort, including an iteration of the relevant criteria, as specified under § 83.13(c), and a summary of the information and findings on which the proposed decision is based. This proposed decision will take into consideration the evaluations of NIOSH and the report and recommendations of the Board, and may also take into consideration information presented or submitted to the Board and the deliberations of the Board. In the case of a petition that NIOSH has determined encompasses more than one class of employees, the Director of NIOSH will issue a separate proposed decision for each separate class of employees.

(b) The Secretary will make the final decision to add or deny adding a class to the Cohort, including the definition of the class, after considering information and recommendations provided to the Secretary by the Director of NIOSH and the Board. HHS will transmit a report of the decision to the petitioner(s), including an iteration of the relevant criteria, as specified under § 83.13(c), and a summary of the information and findings on which the decision is based. HHS will also publish a notice summarizing the decision in the FEDERAL REGISTER.

(c) If, under § 83.15(e), the Board recommends that the Secretary designate a class covered by the petition as an addition to the Cohort, and if, under paragraph (b) of § 83.16, the Secretary decides to deny adding the class, as defined by the Board, to the Cohort, then the Secretary will submit to Congress a determination that the statutory criteria specified under 42 U.S.C. 7384q(b)(1) and (2) have not been met for adding the class to the Cohort. The Secretary will submit this determination to Congress within 30 calendar days following receipt by the Secretary of the recommendation of the Board.

[70 FR 75953, Dec. 22, 2005]

§ 83.17 How will the Secretary report a final decision to add a class of employees to the Cohort and any action of Congress concerning the effect of the final decision?

(a) If the Secretary designates a class of employees to be added to the Cohort, the Secretary will transmit to Congress a report providing the designation, the definition of the class of employees covered by the designation, and the criteria and findings upon which the designation was based.[4]

(b) If, under § 83.15(e), the Board recommends that the Secretary designate a class covered by the petition as an addition to the Cohort, and if, under paragraph (b) of § 83.16, the Secretary decides to add a class to the Cohort that is inclusive of the class as defined by the Board, then the Secretary will transmit to Congress the report specified in paragraph (a) of this section within 30 calendar days following receipt by the Secretary of the recommendation of the Board.

[4] See 42 U.S.C. 7384l(14)(C)(ii).

(c) A designation of the Secretary will take effect 30 calendar days after the date on which the report of the Secretary under paragraph (a) of this section is submitted to Congress, or is deemed to have been submitted to Congress,[5] unless Congress takes an action that reverses or expedites the designation.

(d) After either the expiration of the congressional review period or notification of final congressional action, whichever comes first, the Secretary will transmit to DOL and to the petitioner(s) a report providing the definition of the class and one of the following outcomes:

(1) The addition of the class to the Cohort; or

(2) The result of any action by Congress to reverse or expedite the decision of the Secretary to add the class to the Cohort.

(e) The report specified under paragraph (d) of this section will be published on the Internet at *http://www.cdc.gov/niosh/ocas* and in the FEDERAL REGISTER.

[69 FR 30780, May 28, 2004, as amended at 70 FR 75953, Dec. 22, 2005]

§ 83.18 How can petitioners obtain an administrative review of a final decision by the Secretary?

(a) HHS will allow petitioners to contest only a final decision to deny adding a class to the Cohort or a health endangerment determination under § 83.13(c)(3)(ii). Such challenges must be submitted in writing within 30 calendar days and must include evidence that the final decision relies on a record of either substantial factual errors or substantial errors in the implementation of the procedures of this part. Challenges may not introduce new information or documentation concerning the petition or the NIOSH or Board evaluation(s) that was not submitted or presented by the petitioner(s) or others to NIOSH or to the Board prior to the Board's issuing its recommendations under § 83.15.

(b) A panel of three HHS personnel, independent of NIOSH and appointed by the Secretary, will conduct an administrative review based on a challenge submitted under paragraph (a) of this section and provide recommendations of the panel to the Secretary concerning the merits of the challenge and the resolution of issues contested by the challenge. Reviews by the panel will consider, in addition to the views and information submitted by the petitioner(s) in the challenge, the NIOSH evaluation report(s), the report containing the recommendations of the Board issued under § 83.15, and recommendations of the Director of NIOSH to the Secretary. The reviews may also consider information presented or submitted to the Board and the deliberations of the Board prior to the issuance of the recommendations of the Board under § 83.15. The panel shall consider whether HHS substantially complied with the procedures of this part, the factual accuracy of the information supporting the final decision, and the principal findings and recommendations of NIOSH and those of the Board issued under § 83.15.

(c) The Secretary will decide whether or not to revise a final decision contested by the petitioner(s) under this section after considering information and recommendations provided to the Secretary by the Director of NIOSH, the Board, and from the HHS administrative review conducted under paragraph (b) of this section. HHS will transmit a report of the decision to the petitioner(s).

(d) If the Secretary decides under paragraph (c) of this section to change a designation under § 83.17(a) of this part or a determination under § 83.16(c) of this part, the Secretary will transmit to Congress a report providing such change to the designation or determination, including an iteration of the relevant criteria, as specified under § 83.13(c), and a summary of the information and findings on which the decision is based. HHS will also publish a notice summarizing the decision in the FEDERAL REGISTER.

[5] Under 42 U.S.C. 7384q(c)(2)(C), if the Secretary does not submit within 30 days the determination required under paragraph (a) of § 83.17 of this part, then on the following day, ''it shall be deemed'' that the Secretary submitted the report specified under paragraph (b) of § 83.17 of this part.

(e) A new designation of the Secretary under this section will take effect 30 calendar days after the date on which the report of the Secretary under paragraph (d) of this section is submitted to Congress, unless Congress takes an action that reverses or expedites the designation. Such new designations and related congressional actions will be further reported by the Secretary pursuant to paragraphs (d) and (e) of § 83.17.

[70 FR 75953, Dec. 22, 2005]

§ 83.19 How can the Secretary cancel or modify a final decision to add a class of employees to the Cohort?

(a) The Secretary can cancel a final decision to add a class to the Cohort, or can modify a final decision to reduce the scope of a class added by the Secretary, if HHS obtains records relevant to radiation exposures of members of the class that enable NIOSH to estimate the radiation doses incurred by individual members of the class through dose reconstructions conducted under the requirements of 42 CFR part 82.

(b) Before canceling a final decision to add a class or modifying a final decision to reduce the scope of a class, the Secretary intends to follow evaluation procedures that are substantially similar to those described in this part for adding a class of employees to the Cohort. The procedures will include the following:

(1) Publication of a notice in the FEDERAL REGISTER informing the public of the intent of the Secretary to review the final decision on the basis of new information and describing procedures for this review;

(2) An analysis by NIOSH of the utility of the new information for conducting dose reconstructions under 42 CFR part 82; the analysis will be performed consistently with the requirements for analysis of a petition by NIOSH under §§ 83.13(c)(1) and (2), and 83.13(c)(2) and (3);

(3) A recommendation by the Board to the Secretary as to whether or not the Secretary should cancel or modify his final decision that added the class to the Cohort, based upon a review by the Board of the NIOSH analysis under paragraph (b)(2) of this section and any other relevant information considered by the Board;

(4) An opportunity for members of the class to contest a proposed decision to cancel or modify the prior final decision that added the class to the Cohort, including a reasonable and timely effort by the Secretary to notify members of the class of this opportunity; and

(5) Publication in the FEDERAL REGISTER of a final decision to cancel or modify the prior final decision that added the class to the Cohort.

[69 FR 30780, May 28, 2004. Redesignated at 70 FR 75953, Dec. 22, 2005]

PART 84—APPROVAL OF RESPIRATORY PROTECTIVE DEVICES

Subpart A—General Provisions

Sec.
84.1 Purpose.
84.2 Definitions.
84.3 Respirators for mine rescue or other emergency use in mines.

Subpart B—Application for Approval

84.10 Application procedures.
84.11 Contents of application.
84.12 Delivery of respirators and components by applicant; requirements.

Subpart C—Fees

84.20 Examination, inspection, and testing of complete respirator assemblies; fees.
84.21 Examination, inspection, and testing of respirator components or subassemblies; fees.
84.22 Unlisted fees; additional fees; payment by applicant prior to approval.

Subpart D—Approval and Disapproval

84.30 Certificates of approval; scope of approval.
84.31 Certificates of approval; contents.
84.32 Notice of disapproval.
84.33 Approval labels and markings; approval of contents; use.
84.34 Revocation of certificates of approval.
84.35 Changes or modifications of approved respirators; issuance of modification of certificate of approval.
84.36 Delivery of changed or modified approved respirator.

Subpart E—Quality Control

84.40 Quality control plans; filing requirements.
84.41 Quality control plans; contents.

84.42 Proposed quality control plans; approval by the Institute.
84.43 Quality control records; review by the Institute; revocation of approval.

Subpart F—Classification of Approved Respirators; Scope of Approval; Atmospheric Hazards; Service Time

84.50 Types of respirators to be approved; scope of approval.
84.51 Entry and escape, or escape only; classification.
84.52 Respiratory hazards; classification.
84.53 Service time; classification.

Subpart G—General Construction and Performance Requirements

84.60 Construction and performance requirements; general.
84.61 General construction requirements.
84.62 Component parts; minimum requirements.
84.63 Test requirements; general.
84.64 Pretesting by applicant; approval of test methods.
84.65 Conduct of examinations, inspections, and tests by the Institute; assistance by applicant; observers; recorded data; public demonstrations.
84.66 Withdrawal of applications; refund of fees.

Subpart H—Self-Contained Breathing Apparatus

84.70 Self-contained breathing apparatus; description.
84.71 Self-contained breathing apparatus; required components.
84.72 Breathing tubes; minimum requirements.
84.73 Harnesses; installation and construction; minimum requirements.
84.74 Apparatus containers; minimum requirements.
84.75 Half-mask facepieces, full facepieces, mouthpieces; fit; minimum requirements.
84.76 Facepieces; eyepieces; minimum requirements.
84.77 Inhalation and exhalation valves; minimum requirements.
84.78 Head harnesses; minimum requirements.
84.79 Breathing gas; minimum requirements.
84.80 Interchangeability of oxygen and air prohibited.
84.81 Compressed breathing gas and liquefied breathing gas containers; minimum requirements.
84.82 Gas pressure gages; minimum requirements.
84.83 Timers; elapsed time indicators; remaining service life indicators; minimum requirements.
84.84 Hand-operated valves; minimum requirements.
84.85 Breathing bags; minimum requirements.
84.86 Component parts exposed to oxygen pressures; minimum requirements.
84.87 Compressed gas filters; minimum requirements.
84.88 Breathing bag test.
84.89 Weight requirement.
84.90 Breathing resistance test; inhalation.
84.91 Breathing resistance test; exhalation.
84.92 Exhalation valve leakage test.
84.93 Gas flow test; open-circuit apparatus.
84.94 Gas flow test; closed-circuit apparatus.
84.95 Service time test; open-circuit apparatus.
84.96 Service time test; closed-circuit apparatus.
84.97 Test for carbon dioxide in inspired gas; open- and closed-circuit apparatus; maximum allowable limits.
84.98 Tests during low temperature operation.
84.99 Man tests; testing conditions; general requirements.
84.100 Man tests 1, 2, 3, and 4; requirements.
84.101 Man test 5; requirements.
84.102 Man test 6; requirements.
84.103 Man tests; performance requirements.
84.104 Gas tightness test; minimum requirements.
TABLES TO SUBPART H OF PART 84

Subpart I—Gas Masks

84.110 Gas masks; description.
84.111 Gas masks; required components.
84.112 Canisters and cartridges in parallel; resistance requirements.
84.113 Canisters and cartridges; color and markings; requirements.
84.114 Filters used with canisters and cartridges; location; replacement.
84.115 Breathing tubes; minimum requirements.
84.116 Harnesses; installation and construction; minimum requirements.
84.117 Gas mask containers; minimum requirements.
84.118 Half-mask facepieces, full facepieces, and mouthpieces; fit; minimum requirements.
84.119 Facepieces; eyepieces; minimum requirements.
84.120 Inhalation and exhalation valves; minimum requirements.
84.121 Head harnesses; minimum requirements.
84.122 Breathing resistance test; minimum requirements.
84.123 Exhalation valve leakage test.

84.124 Facepiece tests; minimum requirements.
84.125 Particulate tests; canisters containing particulate filters; minimum requirements.
84.126 Canister bench tests; minimum requirements.
TABLES TO SUBPART I OF PART 84

Subpart J—Supplied-Air Respirators

84.130 Supplied-air respirators; description.
84.131 Supplied-air respirators; required components.
84.132 Breathing tubes; minimum requirements.
84.133 Harnesses; installation and construction; minimum requirements.
84.134 Respirator containers; minimum requirements.
84.135 Half-mask facepieces, full facepieces, hoods, and helmets; fit; minimum requirements.
84.136 Facepieces, hoods, and helmets; eyepieces; minimum requirements.
84.137 Inhalation and exhalation valves; check valves; minimum requirements.
84.138 Head harnesses; minimum requirements.
84.139 Head and neck protection; supplied-air respirators; minimum requirements.
84.140 Air velocity and noise levels; hoods and helmets; minimum requirements.
84.141 Breathing gas; minimum requirements.
84.142 Air supply source; hand-operated or motor driven air blowers; Type A supplied-air respirators; minimum requirements.
84.143 Terminal fittings or chambers; Type B supplied-air respirators; minimum requirements.
84.144 Hand-operated blower test; minimum requirements.
84.145 Motor-operated blower test; minimum requirements.
84.146 Method of measuring the power and torque required to operate blowers.
84.147 Type B supplied-air respirator; minimum requirements.
84.148 Type C supplied-air respirator, continuous-flow class; minimum requirements.
84.149 Type C supplied-air respirator, demand and pressure demand class; minimum requirements.
84.150 Air-supply line tests; minimum requirements.
84.151 Harness test; minimum requirements.
84.152 Breathing tube test; minimum requirements.
84.153 Airflow resistance test, Type A and Type AE supplied-air respirators; minimum requirements.
84.154 Airflow resistance test; Type B and Type BE supplied-air respirators; minimum requirements.
84.155 Airflow resistance test; Type C supplied-air respirator, continuous flow class and Type CE supplied-air respirator; minimum requirements.
84.156 Airflow resistance test; Type C supplied-air respirator, demand class; minimum requirements.
84.157 Airflow resistance test; Type C supplied-air respirator, pressure-demand class; minimum requirements.
84.158 Exhalation valve leakage test.
84.159 Man tests for gases and vapors; supplied-air respirators; general performance requirements.
84.160 Man test for gases and vapors; Type A and Type AE respirators; test requirements.
84.161 Man tests for gases and vapors; Type B and Type BE respirators; test requirements.
84.162 Man test for gases and vapors; Type C respirators, continuous-flow class and Type CE supplied-air respirators; test requirements.
84.163 Man test for gases and vapors; Type C supplied-air respirators, demand and pressure-demand classes; test requirements.
TABLES TO SUBPART J OF PART 84

Subpart K—Non-Powered Air-Purifying Particulate Respirators

84.170 Non-powered air-purifying particulate respirators; description.
84.171 Non-powered air-purifying particulate respirators; required components.
84.172 Breathing tubes; minimum requirements.
84.173 Harnesses; installation and construction; minimum requirements.
84.174 Respirator containers; minimum requirements.
84.175 Half-mask facepieces, full facepieces, hoods, helmets, and mouthpieces; fit; minimum requirements.
84.176 Facepieces, hoods, and helmets; eyepieces; minimum requirements.
84.177 Inhalation and exhalation valves; minimum requirements.
84.178 Head harnesses; minimum requirements.
84.179 Non-powered air-purifying particulate respirators; filter identification.
84.180 Airflow resistance tests.
84.181 Non-powered air-purifying particulate filter efficiency level determination.
84.182 Exhalation valve leakage test; minimum requirements.

Subpart L—Chemical Cartridge Respirators

84.190 Chemical cartridge respirators: description.
84.191 Chemical cartridge respirators; required components.

84.192 Cartridges in parallel; resistance requirements.
84.193 Cartridges; color and markings; requirements.
84.194 Filters used with chemical cartridges; location; replacement.
84.195 Breathing tubes; minimum requirements.
84.196 Harnesses; installation and construction; minimum requirements.
84.197 Respirator containers; minimum requirements.
84.198 Half-mask facepieces, full facepieces, mouthpieces, hoods, and helmets; fit; minimum requirements.
84.199 Facepieces, hoods, and helmets; eyepieces; minimum requirements.
84.200 Inhalation and exhalation valves; minimum requirements.
84.201 Head harnesses; minimum requirements.
84.202 Air velocity and noise levels; hoods and helmets; minimum requirements.
84.203 Breathing resistance test; minimum requirements.
84.204 Exhalation valve leakage test; minimum requirements.
84.205 Facepiece test; minimum requirements.
84.206 Particulate tests; respirators with filters; minimum requirements; general.
84.207 Bench tests; gas and vapor tests; minimum requirements; general.
TABLES TO SUBPART L OF PART 84

Subpart M [Reserved]

Subpart N—Special Use Respirators

84.250 Vinyl chloride respirators; description.
84.251 Required components.
84.252 Gas masks; requirements and tests.
84.253 Chemical-cartridge respirators; requirements and tests.
84.254 Powered air-purifying respirators; requirements and tests.
84.255 Requirements for end-of-service-life indicator.
84.256 Quality control requirements.
84.257 Labeling requirements.
84.258 Fees.

Subparts O–JJ [Reserved]

Subpart KK—Dust, Fume, and Mist; Pesticide; Paint Spray; Powered Air-Purifying High Efficiency Respirators and Combination Gas Masks

84.1100 Scope and effective dates.
84.1101 Definitions.
84.1102 Examination, inspection and testing of complete respirator assemblies; fees.
84.1103 Approval labels and markings; approval of contents; use.
84.1130 Respirators; description.
84.1131 Respirators; required components.
84.1132 Breathing tubes; minimum requirements.
84.1133 Harnesses; installation and construction; minimum requirements.
84.1134 Respirator containers; minimum requirements.
84.1135 Half-mask facepieces, full facepieces, hoods, helmets, and mouthpieces; fit; minimum requirements.
84.1136 Facepieces, hoods, and helmets; eyepieces; minimum requirements.
84.1137 Inhalation and exhalation valves; minimum requirements.
84.1138 Head harnesses; minimum requirements.
84.1139 Air velocity and noise levels; hoods and helmets; minimum requirements.
84.1140 Dust, fume, and mist respirators; performance requirements; general.
84.1141 Isoamyl acetate tightness test; dust, fume, and mist respirators designed for respiratory protection against fumes of various metals having an air contamination level not less than 0.05 milligram per cubic meter; minimum requirements.
84.1142 Isoamyl acetate tightness test; respirators designed for respiratory protection against dusts, fumes, and mists having an air contamination level less than 0.05 milligram per cubic meter, or against radionuclides; minimum requirements.
84.1143 Dust, fume, and mist air-purifying filter tests; performance requirements; general.
84.1144 Silica dust test for dust, fume, and mist respirators; single-use or reusable filters; minimum requirements.
84.1145 Silica dust test; non-powered single-use dust respirators; minimum requirements.
84.1146 Lead fume test for dust, fume, and mist respirators; minimum requirements.
84.1147 Silica mist test for dust, fume, and mist respirators; minimum requirements.
84.1148 Tests for respirators designed for respiratory protection against more than one type of dispersoid; minimum requirements.
84.1149 Airflow resistance tests; all dust, fume, and mist respirators; minimum requirements.
84.1150 Exhalation valve leakage test; minimum requirements.
84.1151 DOP filter test; respirators designed as respiratory protection against dusts, fumes, and mists having an air contamination level less than 0.05 milligram per cubic meter and against radionuclides; minimum requirements.
84.1152 Silica dust loading test; respirators designed as protection against dusts, fumes, and mists having an air contamination level less than 0.05 milligram per

cubic meter and against radionuclides; minimum requirements.
84.1153 Dust, fume, mist, and smoke tests; canister bench tests; gas mask canisters containing filters; minimum requirements.
84.1154 Canister and cartridge requirements.
84.1155 Filters used with canisters and cartridges; location; replacement.
84.1156 Pesticide respirators; performance requirements; general.
84.1157 Chemical cartridge respirators with particulate filters; performance requirements; general.
84.1158 Dust, fume, and mist tests; respirators with filters; minimum requirements; general.
TABLES TO SUBPART KK OF PART 84

AUTHORITY: 29 U.S.C. 577a, 651 *et seq.*, and 657(g); 30 U.S.C. 3, 5, 7, 811, 842(h), 844.

SOURCE: 60 FR 30355, June 8, 1995, unless otherwise noted.

EDITORIAL NOTE: Nomenclature changes to part 84 appear at 69 FR 18803, Apr. 9, 2004.

Subpart A—General Provisions

§ 84.1 Purpose.

The purpose of the regulations contained in this part 84 is:

(a) To establish procedures and prescribe requirements which must be met in filing applications for approval by the National Institute for Occupational Safety and Health of respirators or changes or modifications of approved respirators;

(b) To establish a schedule of fees to be charged each applicant for the inspections, examinations, and testing conducted by the Institute under the provisions of this part;

(c) To provide for the issuance of certificates of approval or modifications of certificates of approval for respirators which have met the applicable construction, performance, and respiratory protection requirements set forth in this part; and

(d) To specify minimum requirements and to prescribe methods to be employed by the Institute and by the applicant in conducting inspections, examinations, and tests to determine the effectiveness of respirators used during entry into or escape from hazardous atmospheres.

§ 84.2 Definitions.

As used in this part—

(a) *Applicant* means an individual, partnership, company, corporation, association, or other organization that designs, manufactures, assembles, or controls the assembly of a respirator and who seeks to obtain a certificate of approval for such respirator.

(b) *Approval* means a certificate or formal document issued by the Institute stating that an individual respirator or combination of respirators has met the minimum requirements of this part, and that the applicant is authorized to use and attach an approval label to any respirator, respirator container, or instruction card for any respirator manufactured or assembled in conformance with the plans and specifications upon which the approval was based, as evidence of such approval.

(c) *Approved* means conforming to the minimum requirements of this part.

(d) *Auxiliary equipment* means a self-contained breathing apparatus, the use of which is limited in underground mine rescue and recovery operations to situations where the wearer has ready access to fresh air and at least one crew equipped with approved self-contained breathing apparatus of 2 hours or longer rating, is in reserve at a fresh-air base.

(e) *Certification and Quality Assurance Branch* means the Certification and Quality Assurance Branch, Division of Safety Research, Appalachian Laboratory for Occupational Safety and Health, National Institute for Occupational Safety and Health, 1095 Willowdale Road, Morgantown, West Virginia 26505–2888.

(f) *Compressed-breathing gas* means oxygen or air stored in a compressed state and supplied to the wearer in gaseous form.

(g) *dBA* means sound pressure levels in decibels, as measured with the A-weighted network of a standard sound level meter using slow response.

(h) *Dust* means a solid mechanically produced particle with a size ranging from submicroscopic to macroscopic.

(i) *Respirators for entry into and escape from* means respiratory devices providing protection during entry into and escape from hazardous atmospheres.

(j) *Respirators for escape only* means respiratory devices providing protection only during escape from hazardous atmospheres.

(k) A *facepiece* or *mouthpiece* is a respirator component designed to provide a gas-tight or dust-tight fit with the face and may include headbands, valves, and connections for canisters, cartridges, filters, or respirable gas source.

(l) *Final inspection* means that activity carried out on a product after all manufacturing and assembly operations are completed to insure completeness and adherence to performance or other specifications, including satisfactory appearance.

(m) *Fume* means a solid condensation particle, generally less than 1 micrometer in diameter.

(n) *Gas* means an aeriform fluid which is in a gaseous state at ordinary temperature and pressure.

(o) *Hazardous atmosphere* means:

(1) Any atmosphere containing a toxic or disease producing gas, vapor, dust, fume, mist, or pesticide, either immediately or not immediately dangerous to life or health; or

(2) Any oxygen-deficient atmosphere.

(p) A *hood* or *helmet* is a respirator component which covers the wearer's head and neck, or head, neck, and shoulders, and is supplied with incoming respirable air for the wearer to breathe. It may include a headharness and connection for a breathing tube.

(q) *Immediately dangerous to life or health* means conditions that pose an immediate threat to life or health or conditions that pose an immediate threat of severe exposure to contaminants, such as radioactive materials, which are likely to have adverse cumulative or delayed effects on health.

(r) *Incoming inspection* means the activity of receiving, examining, and accepting only those materials and parts whose quality conforms to specification requirements.

(s) *In-process inspection* means the control of products at the source of production and at each step of the manufacturing process, so that departures from specifications can be corrected before defective components or materials are assembled into the finished product.

(t) *Institute* means the National Institute for Occupational Safety and Health, Department of Health and Human Services.

(u) *Liquefied-breathing gas* means oxygen or air stored in liquid form and supplied to the wearer in a gaseous form.

(v) *Mist* means a liquid condensation particle with a size ranging from submicroscopic to macroscopic.

(w) *MSHA* means the Mine Safety and Health Administration, U.S. Department of Labor.

(x) *Not immediately dangerous to life or health* means any hazardous atmosphere which may produce physical discomfort immediately, chronic poisoning after repeated exposure, or acute adverse physiological symptoms after prolonged exposure.

(y) *Oxygen-deficient atmosphere* means an atmosphere which contains an oxygen partial pressure of less than 148 millimeters of mercury (19.5 percent by volume at sea level).

(z) *Powered air-purifying respirator* means a device equipped with a facepiece, hood, or helmet, breathing tube, canister, cartridge, filter, canister with filter, or cartridge with filter, and a blower.

(aa) *Respirator* means any device designed to provide the wearer with respiratory protection against inhalation of a hazardous atmosphere.

(bb) *Single-use respirator* means a respirator that is entirely discarded after excessive resistance, sorbent exhaustion, or physical damage renders it unsuitable for further use.

(cc) *Vapor* means the gaseous state of a substance that is solid or liquid at ordinary temperature and pressure.

§ 84.3 Respirators for mine rescue or other emergency use in mines.

(a)(1) NIOSH and the Mine Safety and Health Administration (MSHA), U.S. Department of Labor, shall jointly review and issue certifications for respirators used for mine emergencies and mine rescue, including any associated service-life plans, users' manuals and other supporting documentation.

(2) Each certification for a respirator designed for mine rescue or other emergency use in mines shall include,

as a condition of approval, any use limitations related to mine safety and health.

(b) NIOSH and MSHA shall jointly determine appropriate recall and retrofit remedies for field complaints or identified deficiencies involving any respirators used in the mining environment.

Subpart B—Application for Approval

§ 84.10 Application procedures.

(a) Inspection, examination, and testing leading to the approval of the types of respirators classified in subpart F of this part shall be undertaken by the Institute only pursuant to written applications which meet the minimum requirements set forth in this subpart B.

(b) Applications shall be submitted to the Certification and Quality Assurance Branch, and shall be accompanied by a check, bank draft, or money order in the amount specified in subpart C of this part, payable to the order of the National Institute for Occupational Safety and Health.

(c) Except as provided in § 84.64, the examination, inspection, and testing of all respirators shall be conducted by the Certification and Quality Assurance Branch.

(d) Applicants, manufacturers, or their representatives may visit or communicate with the Certification and Quality Assurance Branch in order to discuss the requirements for approval of any respirator or the proposed designs thereof. No charge shall be made for such consultation and no written report shall be issued to applicants, manufacturers, or their representatives by the Institute as a result of such consultation.

(e) Respirators having electrical or electronic components that are required to be permissible under chapter I of title 30 shall be tested in accordance with 30 CFR part 18. Applications for approval of such respirators by MSHA shall be submitted in writing to: MSHA, Approval and Certification Center, Box 251, Industrial Park Road, Triadelphia, West Virginia 26059.

§ 84.11 Contents of application.

(a) Each application for approval shall contain a complete written description of the respirator for which approval is requested together with drawings and specifications (and lists thereof) showing full details of construction of the respirator and of the materials used.

(b) Drawings shall be titled, numbered, and dated; any revision dates shall be shown on the drawings, and the purpose of each revision being sought shall be shown on the drawing or described on an attachment to the drawing to which it applies.

(c) Each application for approval shall contain a proposed plan for quality control which meets the minimum requirements set forth in subpart E of this part.

(d) Each application shall contain a statement that the respirator has been pretested by the applicant as prescribed in § 84.64, and shall include the results of such tests.

(e) Each application for approval shall contain a statement that the respirator and component parts submitted for approval are either prototypes, or made on regular production tooling, with no operation included which will not be incorporated in regular production processing.

(The information collections contained in this section are approved under OMB control number 0920–0109)

§ 84.12 Delivery of respirators and components by applicant; requirements.

(a) Each applicant shall, when an application is filed pursuant to § 84.10, be advised by the Institute of the total number of respirators and component parts required for testing.

(b) The applicant shall deliver, at his own expense, the number of completely assembled respirators and component parts required for testing, to the Certification and Quality Assurance Branch.

(c) Respirators and component parts submitted for approval must be made from materials specified in the application.

(d) One completely assembled respirator approved under the provisions

of this part may be retained by the Institute as a laboratory exhibit, the remaining respirators may be returned to the applicant at his own expense, upon written request within 30 days after notice of approval. If no such request is made, the respirators will be disposed of by the Institute in such manner as it deems appropriate.

(e) Where a respirator fails to meet the requirements for approval set forth in this part, all respirators and components delivered in accordance with this section may be returned to the applicant at his own expense, upon written request within 30 days after notice of disapproval. If no such request is made, the respirators will be disposed of by the Institute in such manner as it deems appropriate.

Subpart C—Fees

§ 84.20 Examination, inspection, and testing of complete respirator assemblies; fees.

Except as provided in § 84.22, the following fees shall be charged by the Institute for the examination, inspection and testing of complete respirator assemblies:

Self-contained breathing apparatus:	
Entry and escape, 1 hour or more	$3,500
Entry and escape, less than 1 hour	2,750
Escape only	2,000
Gas masks:	
Single hazard	1,100
Type N	4,100
Supplied-air respirators	750
Particulate respirators	1,250
Chemical cartridge respirators	1,150

§ 84.21 Examination, inspection, and testing of respirator components or subassemblies; fees.

Except as provided in § 84.22, the following fees shall be charged by the Institute for the examination, inspection and testing of the individual respirator components or subassemblies:

Facepieces	$450
Canisters	900
Cartridges	600
Filters	650
Hoses	250
Blowers	250
Harnesses	100

§ 84.22 Unlisted fees; additional fees; payment by applicant prior to approval.

(a) Applications for the examination, inspection and testing of complete respirator assemblies which are not listed in § 84.20, or for the examination, inspection, and testing of respirator components or subassemblies which are not listed in § 84.21, shall be accompanied by the following deposits:

Complete respirator assembly	$1,500
Each individual component or subassembly	500

(b) The Institute reserves the right to conduct any examination, inspection, or test it deems necessary to determine the quality and effectiveness of any listed or unlisted respirator assembly or respirator component or subassembly, and to assess the cost of such examinations, inspections, or tests against the applicant prior to the issuance of any approval for such assembly, component, or subassembly.

(c) The fees charged for the examination, inspection, and testing of unlisted respirator assemblies, unlisted individual respirator components or subassemblies, and for the additional examination, inspection, and testing of listed respirator assemblies and components or subassemblies shall be at the rate of $100 per day for each man-day required to be expended by the Institute.

(d) Upon completion of all examinations, inspections, and tests of unlisted respirator assemblies or components, or following the completion of any additional examination, inspections, or tests of listed assemblies, or components or subassemblies, including retesting subsequent to disapproval, the Institute shall advise the applicant in writing of the total cost assessed and the additional amount, if any, which must be paid to the Institute as a condition of approval.

(e) In the event the amount assessed by the Institute for unlisted assemblies, or components or subassemblies is less than the amount of the deposit submitted in accordance with paragraph (a) of this section, the Institute shall refund the overpayment upon the issuance of any approval or notice of disapproval.

Subpart D—Approval and Disapproval

§ 84.30 Certificates of approval; scope of approval.

(a) The Institute shall issue certificates of approval pursuant to the provisions of this subpart only for individual, completely assembled respirators which have been examined, inspected, and tested, and which meet the minimum requirements set forth in subparts H through L of this part, as applicable.

(b) The Institute will not issue certificates of approval for any respirator component or for any respirator subassembly.

(c) The Institute shall not issue an informal notification of approval. However, if the application for approval, submitted in accordance with § 84.11, states that the submitted respirator and component parts are only prototypes, the Institute will examine, inspect, and test such respirator and component parts in accordance with the provisions of this part. If, upon completion of such examinations, inspections and tests, it is found that the prototype meets the minimum requirements set forth in this part, the Institute may inform the applicant, in writing, of the results of the examinations, inspections, and tests, and may require him to resubmit respirators and component parts made on regular production tooling, with no operations included which will not be incorporated in regular production processing, for further examination, inspection, and testing, prior to issuance of the certificate of approval.

(d) Applicants required to resubmit respirators and component parts made on regular production tooling, with no operation included which will not be incorporated in regular production processing, shall be charged fees in accordance with subpart C of this part.

§ 84.31 Certificates of approval; contents.

(a) The certificate of approval shall contain a classification and a description of the respirator or combination of respirators for which it is issued, as provided in this part.

(b) The certificate of approval shall specifically set forth any restrictions or limitations on the respirator's use in hazardous atmospheres.

(c) Each certificate of approval shall be accompanied by the drawings and specifications (and lists thereof) submitted by the applicant in accordance with § 84.11. These drawings and specifications shall be referenced in the certificate of approval, and shall be maintained by the applicant. The drawings and specifications listed in each certificate of approval shall set forth in detail the design and construction requirements which shall be met by the applicant during commercial production of the respirator.

(d) Each certificate of approval shall be accompanied by a reproduction of the approval label design to be employed by the applicant with each approved respirator, as provided in § 84.33.

(e) No test data or specific laboratory findings will accompany any certificate of approval, however, the Institute will release pertinent test data and specific findings upon written request by the applicant, or as required by statute or regulation.

(f) Each certificate of approval shall also contain the approved quality control plan as specified in § 84.42.

§ 84.32 Notice of disapproval.

(a) If, upon the completion of the examinations, inspections, and tests required to be conducted in accordance with the provisions of this part, it is found that the respirator does not meet the minimum requirements set forth in this part, the Institute shall issue a written notice of disapproval to the applicant.

(b) Each notice of disapproval shall be accompanied by all pertinent data or findings with respect to the defects of the respirator for which approval was sought with a view to the possible correction of any such defects.

(c) The Institute shall not disclose, except to the applicant or as required by statute or regulation, any data, findings, or other information with respect to any respirator for which a notice of disapproval is issued.

§ 84.33 Approval labels and markings; approval of contents; use.

(a) Full-scale reproductions of approval labels and markings, and a sketch or description of the method of application and position on the harness, container, canister, cartridge, filter, or other component, together with instructions for the use and maintenance of the respirator shall be submitted to the Institute for approval.

(b) Approval labels shall bear the emblem of the National Institute for Occupational Safety and Health and the seal of the Department of Health and Human Services, the applicant's name and address, an approval number assigned by the Institute and, where appropriate, restrictions or limitations placed upon the use of the respirator by the Institute. The approval number assigned by the Institute shall be designated by the prefix TC and a serial number.

(c) The Institute shall, where necessary, notify the applicant when additional labels, markings, or instructions will be required.

(d) Approval labels and markings shall only be used by the applicant to whom they were issued.

(e) Legible reproductions or abbreviated forms of the label approved by the Institute for use on each respirator shall be attached to or printed at the following locations:

Respirator type	Label type	Location
Self-contained breathing apparatus.	Entire	Harness assembly and canister (where applicable).
Gas mask	Entire	Mask container and canister.
Supplied air respirator	.....do	Respirator container or instruction card.
Particulate respirator	.....do	Respirator container and filter container.
	Abbreviated	Filters.
Chemical-cartridge respirator	Entire	Respirator container, cartridge container, and filter containers (where applicable).
	Abbreviated	Cartridges and filters and filter containers.

(f) The use of any Institute approval label obligates the applicant to whom it is issued to maintain or cause to be maintained the approved quality control sampling schedule and the acceptable quality level for each characteristic tested, and to assure that it is manufactured according to the drawings and specifications upon which the certificate of approval is based.

(g) Each respirator, respirator component, and respirator container shall, as required by the Institute to assure quality control and proper use of the respirator, be labeled distinctly to show the name of the applicant, and the name and letters or numbers by which the respirator or respirator component is designated for trade purposes, and the lot number, serial number, or approximate date of manufacture.

§ 84.34 Revocation of certificates of approval.

The Institute reserves the right to revoke, for cause, any certificate of approval issued pursuant to the provisions of this part. Such causes include, but are not limited to, misuse of approval labels and markings, misleading advertising, and failure to maintain or cause to be maintained the quality control requirements of the certificate of approval.

§ 84.35 Changes or modifications of approved respirators; issuance of modification of certificate of approval.

(a) Each applicant may, if he desires to change any feature of an approved respirator, request a modification of the original certificate of approval issued by the Institute for such respirator by filing an application for such modification in accordance with the provisions of this section.

(b) Applications shall be submitted as for an original certificate of approval, with a request for a modification of the existing certificate to cover any proposed change.

(c) The application shall be accompanied by appropriate drawings and specifications, and by a proposed quality control plan which meets the requirements of subpart E of this part.

(d) The application for modification, together with the accompanying material, shall be examined by the Institute to determine whether testing will be required.

(e) The Institute shall inform the applicant of the fee required for any additional testing and the applicant will be charged for the actual cost of any examination, inspection, or test required, and such fees shall be submitted in accordance with the provisions of subpart C of this part.

(f) If the proposed change or modification meets the requirements of this part, a formal certificate of modification will be issued, accompanied, where necessary, by a list of new and revised drawings and specifications covering the change(s) and reproductions of revised approval labels.

(The information collections contained in this section are approved under OMB control number 0920–0109)

§ 84.36 Delivery of changed or modified approved respirator.

An approved respirator for which a formal certificate of modification has been issued shall be delivered, with proper markings and containers, by the applicant to the Certification and Quality Assurance Branch, as soon as it is commercially produced.

Subpart E—Quality Control

§ 84.40 Quality control plans; filing requirements.

As a part of each application for approval or modification of approval submitted pursuant to this part, each applicant shall file with the Institute a proposed quality control plan which shall be designed to assure the quality of respiratory protection provided by the respirator for which approval is sought.

§ 84.41 Quality control plans; contents.

(a) Each quality control plan shall contain provisions for the management of quality, including:

(1) Requirements for the production of quality data and the use of quality control records;

(2) Control of engineering drawings, documentations, and changes;

(3) Control and calibration of measuring and test equipment;

(4) Control of purchased material to include incoming inspection;

(5) Lot identification, control of processes, manufacturing, fabrication, and assembly work conducted in the applicant's plant;

(6) Audit of final inspection of the completed product; and

(7) The organizational structure necessary to carry out these provisions.

(b) Each provision for incoming and final inspection in the quality control plan shall include a procedure for the selection of a sample of respirators and the components thereof for testing, in accordance with procedures set forth in Military Standard MIL-STD-414, 11 June 1957, including Change Notice No. 1, ''Sampling Procedures and Tables for Inspection by Variables for Percent Defective,'' or an approved equivalent sampling procedure, or an approved combination of sampling procedures. The procedure of Military Standard MIL-STD-105D, 29 April 1963, ''Sampling Procedures and Tables for Inspection by Attributes,'' is an example of an equivalent sampling procedure. MIL-STD-414 is incorporated by reference and has been approved by the Director of the Federal Register in accordance with 5 U.S.C. 552(a) and 1 CFR part 51. Copies may be obtained from DODSSP, Standardization Document Order Desk, 700 Robbins Avenue, Bldg. 4D, Philadelphia, PA 19111–5094. Copies may be inspected at the NIOSH, Certification and Quality Assurance Branch, 1095 Willowdale Road, Morgantown, WV 26505–2888, or at the National Archives and Records Administration (NARA). For information on the availability of this material at NARA, call 202–741–6030, or go to: *http://www.archives.gov/federal_register/code_of_federal_regulations/ibr_locations.html*. Copies of MIL-STD-105D may be inspected or obtained from the NIOSH, Certification and Quality Assurance Branch, 1095 Willowdale Road, Morgantown, WV 26505–2888. Incoming bulk raw material inspection or verification of specification, and in-process inspection shall be sufficient to ensure control of product quality through the manufacturing cycle.

(c) The sampling procedure shall include a list of the characteristics to be tested by the applicant or his agent.

(d) The characteristics listed in accordance with paragraph (c) of this section shall be classified according to the potential effect of such defect and grouped into the following classes:

(1) *Critical*. A defect that judgment and experience indicate is likely to result in a condition immediately hazardous to life or health for individuals using or depending upon the respirator;

(2) *Major A*. A defect, other than critical, that is likely to result in failure to the degree that the respirator does not provide any respiratory protection, or a defect that reduces protection and is not detectable by the user;

(3) *Major B*. A defect, other than Major A or critical, that is likely to result in reduced respiratory protection, and is detectable by the user; and

(4) *Minor*. A defect that is not likely to materially reduce the usability of the respirator for its intended purpose, or a defect that is a departure from established standards and has little bearing on the effective use or operation of the respirator.

(e) The quality control inspection test method to be used by the applicant or his agent for each characteristic required to be tested shall be described in detail.

(f) Each item manufactured shall be 100 percent inspected for defects in all critical characteristics and all defective items shall be rejected.

(g) The Acceptable Quality Level (AQL) for each major or minor defect so classified by the applicant shall be:

(1) *Major A*. 1.0 percent;

(2) *Major B*. 2.5 percent; and

(3) *Minor*. 4.0 percent.

(h) Except as provided in paragraph (i) of this section, inspection level IV as described in MIL-STD-414, 11 June 1957, including Change Notice No.1, ''Sampling Procedures and Tables for Inspection by Variables for Percent Defective,'' or an equivalent procedure, shall be used for major and minor characteristics and 100 percent inspection for critical characteristics. Inspection level II as described in MIL-STD-105D, 29 April 1963, ''Sampling Procedures and Tables for Inspection by Attributes,'' is an example of an equivalent procedure.

(i) Subject to the approval of the Institute, where the quality control plan provisions for raw material, processes, manufacturing, and fabrication, inspections are adequate to ensure control of finished article quality, destructive testing of finished articles may be conducted at a lower level of inspection than that specified in paragraph (h) of this section.

(The information collections contained in this section are approved under OMB control number 0920–0109)

§ 84.42 Proposed quality control plans; approval by the Institute.

(a) Each proposed quality control plan submitted in accordance with this subpart shall be reviewed by the Institute to determine its effectiveness in ensuring the quality of respiratory protection provided by the respirator for which an approval is sought.

(b) If the Institute determines that the proposed quality control plan submitted by the applicant will not ensure adequate quality control, the Institute shall require the applicant to modify the procedures and testing requirements of the plan prior to approval of the plan and issuance of any certificate of approval.

(c) Approved quality control plans shall constitute a part of and be incorporated into any certificate of approval issued by the Institute, and compliance with such plans by the applicant shall be a condition of approval.

§ 84.43 Quality control records; review by the Institute; revocation of approval.

(a) The applicant shall keep quality control inspection records sufficient to carry out the procedures required in MIL-STD-414, 11 June 1957, including Change Notice No. 1, ''Sampling Procedures and Tables for Inspection by Variables for Percent Defective,'' or an approved equivalent sampling procedure. MIL-STD-105D, 29 April 1963, ''Sampling Procedures and Tables for Inspection by Attributes,'' is an example of an approved equivalent sampling procedure. MIL-STD-414 is incorporated by reference and has been approved by the Director of the Federal

Register in accordance with 5 U.S.C. 552(a) and 1 CFR part 51. Copies may be obtained from DODSSP, Standardization Document Order Desk, 700 Robbins Avenue, Bldg. 4D, Philadelphia, Pa. 19111–5094. Copies may be inspected at the NIOSH, Certification and Quality Assurance Branch, 1095 Willowdale Road, Morgantown, WV 26505–2888, or at the National Archives and Records Administration (NARA). For information on the availability of this material at NARA, call 202–741–6030, or go to: *http://www.archives.gov/federal_register/code_of_federal_regulations/ibr_locations.html*. Copies of MIL-STD-105D may be inspected or obtained from the NIOSH, Certification and Quality Assurance Branch, 1095 Willowdale Road, Morgantown, WV 26505–2888.

(b) The Institute reserves the right to have its representatives inspect the applicant's quality control test methods, equipment, and records, and to interview any employee or agent of the applicant in regard to quality control test methods, equipment, and records.

(c) The Institute reserves the right to revoke, for cause, any certificate of approval where it is found that the applicant's quality control test methods, equipment, or records do not ensure effective quality control over the respirator for which the approval was issued.

(The information collections contained in this section are approved under OMB control number 0920–0109)

Subpart F—Classification of Approved Respirators; Scope of Approval; Atmospheric Hazards; Service Time

§ 84.50 Types of respirators to be approved; scope of approval.

Approvals shall be issued for the types of respirators which have been classified pursuant to this subpart F, have been inspected, examined and tested by the Institute, in accordance with the provisions of subparts G through L of this part, and have been found to provide respiratory protection for fixed periods of time against the hazards specified in such approval.

§ 84.51 Entry and escape, or escape only; classification.

Respirators described in subparts H through L of this part shall be classified for use as follows:

(a) *Entry and escape*. Respirators designed and approved for use during entry into a hazardous atmosphere, and for escape from a hazardous atmosphere; or

(b) *Escape only*. Respirators designed and approved for use only during escape from a hazardous atmosphere.

§ 84.52 Respiratory hazards; classification.

Respirators described in subparts H through L of this part shall be classified as approved for use against any or all of the following respiratory hazards:

(a) Oxygen deficiency;

(b) Gases and vapors; and

(c) Particles, including dusts, fumes and mists.

§ 84.53 Service time; classification.

(a) Respirators described in subparts H through L of this part shall be classified, where applicable, as approved for use during the following prescribed service times:

(1) Four hours;

(2) Three hours;

(3) Two hours;

(4) One hour;

(5) Forty-five minutes;

(6) Thirty minutes;

(7) Fifteen minutes;

(8) Ten minutes;

(9) Five minutes; or

(10) Three minutes.

(b) Other service times may be prescribed by the Institute.

Subpart G—General Construction and Performance Requirements

§ 84.60 Construction and performance requirements; general.

(a) The Institute shall issue approvals for the types of respirators described in subparts H through L of this part which have met the minimum requirements set forth for such respirators in this part.

(b) In addition to the types of respirators specified in subparts H through L of this part, the Institute

shall issue approvals for other respiratory protective devices not specifically described in this part subject to such additional requirements as may be imposed in accordance with § 84.63(c).

§ 84.61 General construction requirements.

(a) Respirators will not be accepted by the Institute for examination, inspection and testing unless they are designed on sound engineering and scientific principles, constructed of suitable materials and evidence good workmanship.

(b) Respirator components which come into contact with the wearer's skin shall be made of nonirritating materials.

(c) Components replaced during or after use shall be constructed of materials which will not be damaged by normal handling.

(d) Mouthpieces, hoods, helmets, and facepieces, except those employed in single-use respirators, shall be constructed of materials which will withstand repeated disinfection as recommended by the applicant in his instructions for use of the device.

§ 84.62 Component parts; minimum requirements.

(a) The component parts of each respirator shall be:

(1) Designed, constructed, and fitted to insure against creation of any hazard to the wearer;

(2) Assembled to permit easy access for inspection and repair of functional parts; and

(3) Assembled to permit easy access to parts which require periodic cleaning and disinfecting.

(b) Replacement parts shall be designed and constructed to permit easy installation and to maintain the effectiveness of the respirator.

§ 84.63 Test requirements; general.

(a) Each respirator and respirator component shall when tested by the applicant and by the Institute, and meet the applicable requirements set forth in subparts H through L of this part.

(b) Where a combination respirator is assembled from two or more types of respirators, as described in this part, each of the individual respirator types which have been combined shall, as applicable, meet the minimum requirements for such respirators set forth in subparts H through L of this part, and such combination respirators, except as specified in § 84.70(b)(2), will be classified by the type of respirator in the combination which provides the least protection to the user.

(c) In addition to the minimum requirements set forth in subparts H through L of this part, the Institute reserves the right to require, as a further condition of approval, any additional requirements deemed necessary to establish the quality, effectiveness, and safety of any respirator used as protection against hazardous atmospheres.

(d) Where it is determined after receipt of an application that additional requirements will be required for approval, the Institute will notify the applicant in writing of these additional requirements, and necessary examinations, inspections, or tests, stating generally the reasons for such requirements, examinations, inspections, or tests.

§ 84.64 Pretesting by applicant; approval of test methods.

(a) Prior to making or filing any application for approval or modification of approval, the applicant shall conduct, or cause to be conducted, examinations, inspections, and tests of respirator performance which are equal to or exceed the severity of those prescribed in this part.

(b) With the application, the applicant shall provide a statement to the Institute showing the types and results of the examinations, inspections, and tests required under paragraph (a) of this section and state that the respirator meets the minimum requirements of subparts H through L of this part, as applicable. Complete examination, inspection, and test data shall be retained on file by the applicant and be submitted, upon request, to the Institute.

(c) The Institute may, upon written request by the applicant, provide drawings and descriptions of its test equipment and otherwise assist the applicant in establishing a test laboratory

or securing the services of a testing agency.

(d) No approval will be issued until the Institute has validated the applicant's test results.

§ 84.65 Conduct of examinations, inspections, and tests by the Institute; assistance by applicant; observers; recorded data; public demonstrations.

(a) All examinations, inspections, and tests conducted pursuant to subparts H through L of this part will be under the sole direction and control of the Institute.

(b) The Institute may, as a condition of approval, require the assistance of the applicant or agents of the applicant during the assembly, disassembly, or preparation of any respirator or respirator component prior to testing or in the operation of such equipment during testing.

(c) Only Institute personnel, persons assisting the Institute pursuant to paragraph (b) of this section, and such other persons as are requested by the Institute or the applicant to be observers, shall be present during any examination, inspection, or test conducted prior to the issuance of an approval by the Institute for the equipment under consideration.

(d) The Institute shall hold as confidential any analyses, drawings, specifications, or materials submitted by the applicant and shall not disclose any principles or patentable features of such equipment, except as required by statute or regulation.

(e) As a condition of each approval issued for any respirator, the Institute reserves the right, following the issuance of such approval, to conduct such public tests and demonstrations of the approved respiratory equipment as is deemed appropriate.

§ 84.66 Withdrawal of applications; refund of fees.

(a) Any applicant may, upon a written request submitted to the Institute, withdraw any application for approval of any respirator.

(b) Upon receipt of a written request for the withdrawal of an application, the Institute shall determine the total man-days expended and the amount due for services already performed during the course of any examinations, inspections, or tests conducted pursuant to such application. The total amount due shall be determined in accordance with the provisions of § 84.22 and assessed against the fees submitted by the applicant. If the total amount assessed is less than the fees submitted, the Institute shall refund the balance together with a statement of the charges made for services rendered.

Subpart H—Self-Contained Breathing Apparatus

§ 84.70 Self-contained breathing apparatus; description.

(a) Self-contained breathing apparatus, including all completely assembled, portable, self-contained devices designed for use as respiratory protection during entry into and escape from or escape only from hazardous atmospheres, are described as follows:

(1) *Closed-circuit apparatus.* An apparatus of the type in which the exhalation is rebreathed by the wearer after the carbon dioxide has been effectively removed and a suitable oxygen concentration restored from sources composed of:

(i) Compressed oxygen; or

(ii) Chemical oxygen; or

(iii) Liquid-oxygen.

(2) Open-circuit apparatus. An apparatus of the following types from which exhalation is vented to the atmosphere and not rebreathed:

(i) *Demand-type apparatus.* An apparatus in which the pressure inside the facepiece in relation to the immediate environment is positive during exhalation and negative during inhalation; or

(ii) *Pressure-demand-type apparatus.* An apparatus in which the pressure inside the facepiece in relation to the immediate environment is positive during both inhalation and exhalation.

(b) The following respirators may be classified as designed and approved for use during emergency entry into a hazardous atmosphere:

(1) A combination respirator which includes a self-contained breathing apparatus; and

(2) A Type ''C'' or Type ''CE'' supplied air respirator, where—

(i) The self-contained breathing apparatus is classified for 3-, 5-, or 10-

minute service time and the air line supply is used during entry; or

(ii) The self-contained breathing apparatus is classified for 15 minutes or longer service time and not more than 20 percent of the rated capacity of the air supply is used during entry.

(c) Self-contained breathing apparatus classified for less than 1 hour service time will not be approved for use during underground mine rescue and recovery operations except as auxiliary equipment.

(d) Self-contained breathing apparatus classified for less than 30 minutes' service time will not be approved for use as auxiliary equipment during underground mine rescue and recovery operations.

§ 84.71 Self-contained breathing apparatus; required components.

(a) Each self-contained breathing apparatus described in § 84.70 shall, where its design requires, contain the following component parts:

(1) Facepiece or mouthpiece, and noseclip;

(2) Respirable breathing gas container;

(3) Supply of respirable breathing gas;

(4) Gas pressure or liquid level gages;

(5) Timer;

(6) Remaining service life indicator or warning device;

(7) Hand-operated valves;

(8) Breathing bag;

(9) Safety relief valve or safety relief system; and

(10) Harness.

(b) The components of each self-contained breathing apparatus shall meet the minimum construction requirements set forth in subpart G of this part.

§ 84.72 Breathing tubes; minimum requirements.

Flexible breathing tubes used in conjunction with breathing apparatus shall be designed and constructed to prevent:

(a) Restriction of free head movement;

(b) Disturbance of the fit of facepieces and mouthpieces;

(c) Interference with the wearer's activities; and

(d) Shutoff of airflow due to kinking, or from chin or arm pressure.

§ 84.73 Harnesses; installation and construction; minimum requirements.

(a) Each apparatus shall, where necessary, be equipped with a suitable harness designed and constructed to hold the components of the apparatus in position against the wearer's body.

(b) Harnesses shall be designed and constructed to permit easy removal and replacement of apparatus parts and, where applicable, provide for holding a full facepiece in the ready position when not in use.

§ 84.74 Apparatus containers; minimum requirements.

(a) Apparatus may be equipped with a substantial, durable container bearing markings which show the applicant's name, the type and commercial designation of the respirator it contains, and all appropriate approval labels.

(b) Containers supplied by the applicant for carrying or storing self-contained breathing apparatus will be inspected, examined, and tested as components of the respirator for which approval is sought.

(c) Containers for self-contained breathing apparatus shall be designed and constructed to permit easy removal of the apparatus.

§ 84.75 Half-mask facepieces, full facepieces, mouthpieces; fit; minimum requirements.

(a) Half-mask facepieces and full facepieces shall be designed and constructed to fit persons with various facial shapes and sizes, either:

(1) By providing more than one facepiece size; or

(2) By providing one facepiece size which will fit varying facial shapes and sizes.

(b) Full facepieces shall provide for the optional use of corrective spectacles or lenses which shall not reduce the respiratory protective qualities of the apparatus.

(c) Apparatus with mouthpieces shall be equipped with noseclips which are securely attached to the mouthpiece or apparatus and provide an airtight seal.

(d) Facepieces shall be designed to prevent eyepiece, spectacle, and lens fogging.

§ 84.76 Facepieces; eyepieces; minimum requirements.

(a) Facepieces shall be designed and constructed to provide adequate vision which is not distorted by the eyepiece.

(b) All eyepieces shall be designed and constructed to be impact and penetration resistant. Federal Specification, Mask, Air Line: and Respirator, Air Filtering, Industrial, GGG-M-125d, October 11, 1965 with interim amendment-1, July 30, 1969, is an example of an appropriate standard for determining impact and penetration resistance. Copies of GGG-M-125d may be obtained from the NIOSH, Certification and Quality Assurance Branch, 1095 Willowdale Road, Morgantown, WV 26505–2888.

§ 84.77 Inhalation and exhalation valves; minimum requirements.

(a) Inhalation and exhalation valves shall be provided where necessary and protected against damage and distortion.

(b) Exhalation valves shall be—

(1) Protected against external influence; and

(2) Designed and constructed to prevent inward leakage of contaminated air.

§ 84.78 Head harnesses; minimum requirements.

(a) Facepieces shall be equipped with adjustable and replaceable head harnesses designed and constructed to provide adequate tension during suspension and an even distribution of pressure over the entire area in contact with the face.

(b) Mouthpieces shall be equipped, where applicable, with adjustable and replaceable harnesses designed and constructed to hold the mouthpiece in place.

§ 84.79 Breathing gas; minimum requirements.

(a) Breathing gas used to supply apparatus shall be respirable and contain no less than 19.5 (dry atmosphere) volume percent of oxygen.

(b) Oxygen, including liquid oxygen, shall contain not less than 99.0 percent, by volume, of pure O_2, not more than 0.03%, by volume, carbon dioxide, and not more than 0.001%, by volume, carbon monoxide. Methods for making these determinations can be found in the U.S. Pharmacopeia National Formulary. Containers used for oxygen must not be treated with any toxic, sleep-inducing, narcosis-producing, or respiratory tract irritating compounds.

(c) Compressed, gaseous breathing air shall meet the applicable minimum grade requirements for Type I gaseous air set forth in the Compressed Gas Association Commodity Specification for Air, G–7.1, 1966 (Grade D or higher quality). G–7.1 is incorporated by reference and has been approved by the Director of the Federal Register in accordance with 5 U.S.C. 552(a) and 1 CFR part 51. Copies may be obtained from American National Standards Institute, Inc., 1430 Broadway, New York, NY 10018. Copies may be inspected at the NIOSH, Certification and Quality Assurance Branch, 1095 Willowdale Road, Morgantown, WV 26505–2888, or at the National Archives and Records Administration (NARA). For information on the availability of this material at NARA, call 202–741–6030, or go to: *http://www.archives.gov/federal_register/code_of_federal_regulations/ibr_locations.html*.

(d) Compressed, liquefied breathing air shall meet the applicable minimum grade requirements for Type II liquid air set forth in the Compressed Gas Association Commodity Specification for Air, G–7.1, 1966 (Grade B or higher quality). G–7.1 is incorporated by reference and has been approved by the Director of the Federal Register in accordance with 5 U.S.C. 552(a) and 1 CFR part 51. Copies may be obtained from American National Standards Institute, Inc., 1430 Broadway, New York, NY 10018. Copies may be inspected at the NIOSH, Certification and Quality Assurance Branch, 1095 Willowdale Road, Morgantown, WV 26505–2888, or at the National Archives and Records Administration (NARA). For information on the availability of this material at NARA, call 202–741–6030, or go to: *http://www.archives.gov/federal_register/*

code_of_federal_regulations/ibr_locations.html.

§ 84.80 Interchangeability of oxygen and air prohibited.

Approvals shall not be issued by the Institute for any apparatus, combination of respirator assemblies, or any apparatus or respirator component which is designed or constructed to permit the interchangeable use of oxygen and air.

§ 84.81 Compressed breathing gas and liquefied breathing gas containers; minimum requirements.

(a) Compressed breathing gas and liquefied breathing gas containers shall meet the minimum requirements of the Department of Transportation for interstate shipment of such containers when fully charged.

(b) Such containers shall be permanently and legibly marked to identify their contents, e.g., compressed breathing air, compressed breathing oxygen, liquefied breathing air, or liquefied breathing oxygen.

(c) Containers normally removed from apparatus for refilling shall be equipped with a dial indicating gage which shows the pressure in the container.

(d) Compressed breathing gas contained valves or a separate charging system or adapter provided with each apparatus shall be equipped with outlet threads specified for the service by the American Standards Association, Compressed Gas Cylinder Valve Outlet and Inlet Connections, B57.1–1965. B57.1–1965 is incorporated by reference and has been approved by the Director of the Federal Register in accordance with 5 U.S.C. 552(a) and 1 CFR part 51. Copies may be obtained from American National Standards Institute, Inc., 1430 Broadway, New York, NY Copies may be inspected at the NIOSH, Certification and Quality Assurance Branch, 1095 Willowdale Road, Morgantown, WV 26505–2888, or at the National Archives and Records Administration (NARA). For information on the availability of this material at NARA, call 202–741–6030, or go to: *http://www.archives.gov/federal_register/code_of_federal_regulations/ibr_locations.html.*

§ 84.82 Gas pressure gages; minimum requirements.

(a) Gas pressure gages employed on compressed breathing gas containers shall be calibrated in pounds per square inch.

(b) Liquid-level gages shall be calibrated in fractions of total container capacity, or in units of liquid volume.

(c) Gas pressure gages other than those specified in paragraphs (a) and (b) of this section shall be calibrated in:

(1) Pounds per square inch; or

(2) In fractions of total container capacity; or

(3) Both in pounds per square inch and fractions of total container capacity.

(d)(1) Dial-indicating gages shall be reliable to within ±5 percent of full scale when tested both up and down the scale at each of 5 equal intervals.

(2) The full-scale graduation of dial-indicating gages shall not exceed 150 percent of the maximum rated cylinder pressures specified for the container in applicable Department of Transportation specifications or permits.

(e)(1) Stem-type gages shall be readable by sight and by touch and shall have a stem travel distance of not less than one-fourth inch between each graduation.

(2) A minimum of five graduations shall be engraved on the stem of each gage and these graduations shall include readings for empty, one-quarter, one-half, three-quarters, and full.

(3) Stem gage readings shall not vary from true readings by more than one-sixteenth inch per inch of stem travel.

(f) The loss of gas through a broken gage or severed gage connection shall not exceed 70 liters per minute when the cylinder pressure is 6,900 kN/m.^{2} (1,000 pounds per square inch gage) or when the liquid level is at one-half.

(g) Where gages are connected to the apparatus through a gage line, the gage and line shall be capable of being isolated from the apparatus except where the failure of the gage or line would not impair the performance or service life of the apparatus.

(h) Oxygen pressure gages shall have the words ''Oxygen'' and ''Use No Oil'' marked prominently on the gage.

(i)(1) Apparatus using compressed breathing gas, except apparatus classified for escape only, shall be equipped with gages visible to the wearer which indicate the remaining gas content in the container.

(2) Apparatus using liquefied breathing gas, except apparatus classified for escape only, shall be equipped with gages visible to the wearer which indicate the remaining liquid content in the container; however, where the liquid content cannot be rapidly vented, and the service time of the device begins immediately after filling, a timer shall be provided in place of a visible gage.

§ 84.83 Timers; elapsed time indicators; remaining service life indicators; minimum requirements.

(a) Elapsed time indicators shall be provided for apparatus with a chemical oxygen source, except:

(1) Apparatus used for escape only; or

(2) Liquefied breathing gas apparatus equipped with gages visible to the wearer which indicate the remaining liquid content in the container.

(b) The timer or other indicator shall be accurately calibrated in minutes of remaining service life.

(c) Timers shall be readable by sight and by touch during use by the wearer.

(d) Timers shall be equipped with automatically preset alarms which will warn the wearer for a period of 7 seconds or more after the preset time has elapsed.

(e) Remaining service-life indicators or warning devices shall be provided in addition to a pressure gage on compressed gas self-contained breathing apparatus, except apparatus used for escape only, and shall operate automatically without preadjustment by the wearer.

(f) Each remaining service-life indicator or warning device shall give an alarm when the remaining service life of the apparatus is reduced within a range of 20 to 25 percent of its rated service time.

§ 84.84 Hand-operated valves; minimum requirements.

(a) Hand-operated valves shall be designed and constructed to prevent removal of the stem from the valve body during normal usage to insure against a sudden release of the full pressure of the container when the valve is opened.

(b) Valves shall be designed or positioned to prevent accidental opening and closing, and damage from external forces.

(c) Valves operated during use of the apparatus shall be installed in locations where they can be readily adjusted by the wearer.

(d) Main-line valves, designed and constructed to conserve gas in the event of a regulator or demand valve failure, shall be provided in addition to gas container valves, except when such failure will not affect performance.

(e) Hand-operated bypass systems designed and constructed to permit the wearer to breathe and to conserve his gas supply in the event of a regulator or demand valve failure, shall be provided where necessary.

(f) Valves installed on apparatus shall be clearly distinguishable from one another by sight and touch.

(g) The bypass system valve control shall be colored red.

(h) A main-line or bypass valve or system will not be required on apparatus for escape only.

(i) Safety relief valves or systems, designed and constructed to release excess pressure in the breathing circuit, shall be provided on closed-circuit apparatus, and shall meet the following requirements:

(1) The relief valve or system shall operate automatically when the pressure in the breathing circuit on the inhalation side of the breathing bag reaches 13 mm. (one-half inch) water-column height of pressure above the minimum pressure required to fill the breathing bag, within the breathing resistance requirements for the apparatus.

(2) The relief valve or system shall be designed to prevent external atmospheres from entering the breathing circuit.

(3) The relief valve or system shall be designed to permit manual overriding for test purposes and in the event of a failure in the valve or system.

§ 84.85 Breathing bags; minimum requirements.

(a) Breathing bags shall have sufficient volume to prevent gas waste during exhalation and to provide an adequate reserve for inhalation.

(b) Breathing bags shall be constructed of materials which are flexible and resistant to gasoline vapors.

(c) Breathing bags shall be installed in a location which will protect them from damage or collapse by external forces, except on apparatus classified for escape only.

§ 84.86 Component parts exposed to oxygen pressures; minimum requirements.

Each applicant shall certify that the materials employed in the construction of component parts exposed to oxygen pressures above atmospheric pressure are safe and compatible for their intended use.

§ 84.87 Compressed gas filters; minimum requirements.

All self-contained breathing apparatus using compressed gas shall have a filter downstream of the gas source to effectively remove particles from the gas stream.

§ 84.88 Breathing bag test.

(a) Breathing bags will be tested in an air atmosphere saturated with gasoline vapor at room temperature (24–30 °C./75–85 °F.) for a continuous period of twice the rated time of the apparatus (except for apparatus for escape only where the test period shall be the rated time of the apparatus).

(b) The bag will be operated during this test by a breathing machine with 24 respirations per minute and a minute-volume of 40 liters.

(c) A breathing machine cam with a work rate of 622 kp.-m./min. will be used. The dimensions of a suitable breathing machine cam are available from the Institute upon request.

(d) The air within the bag(s) shall not contain more than 100 parts per million of gasoline vapor at the end of the test.

§ 84.89 Weight requirement.

(a) The completely assembled and fully charged apparatus shall not weigh more than 16 kg. (35 pounds); however, where the weight decreases by more than 25 percent of its initial charge weight during its rated service life, the maximum allowable weight of a completely assembled and fully charged apparatus shall be 18 kg. (40 pounds).

(b) Where an apparatus employs equipment which contributes materially to the wearer's comfort, e.g., a cooling system, the completely assembled and fully charged apparatus shall not weigh more than 18 kg. (40 pounds) regardless of the decrease in weight during use.

§ 84.90 Breathing resistance test; inhalation.

(a) Resistance to inhalation airflow will be measured in the facepiece or mouthpiece while the apparatus is operated by a breathing machine as described in § 84.88.

(b) The inhalation resistance of open-circuit apparatus shall not exceed 32 mm. (1.25 inch) water-column height (at a flow rate of 120 liters per minute).

(c) The inhalation resistance of closed-circuit apparatus shall not exceed the difference between exhalation resistance (§ 84.91(e)) and 10 cm. (4 inches) water-column height.

§ 84.91 Breathing resistance test; exhalation.

(a) Resistance to exhalation airflow will be measured in the facepiece or mouthpiece of open-circuit apparatus with air flowing at a continuous rate of 85 liters per minute.

(b) The exhalation resistance of demand apparatus shall not exceed 25 mm. (1 inch) water-column height.

(c) The exhalation resistance of pressure-demand apparatus shall not exceed the static pressure in the facepiece by more than 51 mm. (2 inches) water-column height.

(d) The static pressure (at zero flow) in the facepiece shall not exceed 38 mm. (1.5 inches) water-column height.

(e) Resistance to exhalation airflow will be measured in the facepiece or mouthpiece of closed-circuit apparatus with a breathing machine as described in § 84.88, and the exhalation resistance shall not exceed 51 mm. (2 inches) water-column height.

§ 84.92 Exhalation valve leakage test.

(a) Dry exhalation valves and valve seats will be subjected to a suction of 25 mm. (1 inch) water-column height while in a normal operating position.

(b) Leakage between the valve and the valve seat shall not exceed 30 milliliters per minute.

§ 84.93 Gas flow test; open-circuit apparatus.

(a) A static-flow test will be performed on all open-circuit apparatus.

(b) The flow from the apparatus shall be greater than 200 liters per minute when the pressure in the facepiece of demand-apparatus is lowered by 51 mm. (2 inches) water-column height when full container pressure is applied.

(c) Where pressure demand apparatus are tested, the flow will be measured at zero gage pressure in the facepiece.

(d) Where apparatus with compressed-breathing-gas containers are tested, the flow test shall also be made with 3,450 kN/m.^{2} (500 p.s.i.g.) container pressure applied.

§ 84.94 Gas flow test; closed-circuit apparatus.

(a) Where oxygen is supplied by a constant-flow device only, the rate of flow shall be at least 3 liters per minute for the entire rated service time of the apparatus.

(b) Where constant flow is used in conjunction with demand flow, the constant flow shall be greater than 1.5 liters per minute for the entire rated service time.

(c) All demand-flow devices shall provide at least 30 liters of oxygen per minute when in the fully open position.

§ 84.95 Service time test; open-circuit apparatus.

(a) Service time will be measured with a breathing machine as described in § 84.88.

(b) The open-circuit apparatus will be classified according to the length of time it supplies air or oxygen to the breathing machine.

(c) The service time obtained on this test will be used to classify the open-circuit apparatus in accordance with § 84.53.

§ 84.96 Service time test; closed-circuit apparatus.

(a) The closed-circuit apparatus will be classified according to the length of time it supplies adequate breathing gas to the wearer during man test No. 4 described in Table 4 of this subpart.

(b) The service time obtained on man test No. 4 will be used to classify the closed-circuit apparatus in accordance with § 84.53.

§ 84.97 Test for carbon dioxide in inspired gas; open- and closed-circuit apparatus; maximum allowable limits.

(a) *Open-circuit apparatus.* (1) The concentration of carbon dioxide in inspired gas in open-circuit apparatus will be measured at the mouth while the apparatus mounted on a dummy head is operated by a breathing machine. An acceptable method for measuring the concentration of carbon dioxide is described in Bureau of Mines Report of Investigations 6865, A Machine-Test Method for Measuring Carbon Dioxide in the Inspired Air of Self-Contained Breathing Apparatus, 1966. Copies of Report of Investigations 6865 may be inspected or obtained from the NIOSH, Certification and Quality Assurance Branch, 1095 Willowdale Road, Morgantown, WV. 26505–2888.

(2) The breathing rate will be 14.5 respirations per minute with a minute-volume of 10.5 liters.

(3) A sedentary breathing machine cam will be used.

(4) The apparatus will be tested at a temperature of 27 ±2 °C. (80 ±5 °F.).

(5) A concentration of 5 percent carbon dioxide in air will be exhaled into the facepiece.

(b) *Closed-circuit apparatus.* The concentration of carbon dioxide in inspired gas in closed-circuit apparatus will be measured at the mouth while the parts of the apparatus contributing to dead-air space are mounted on a dummy head and operated by the breathing machine as in paragraphs (a) (1) through (5) of this section.

(c) During the testing required by paragraphs (a) and (b) of this section, the concentration of carbon dioxide in inspired gas at the mouth will be continuously recorded, and the maximum

average concentration during the inhalation portion of the breathing cycle shall not exceed the following limits:

Where the service time is	Maximum allowable average concentration of carbon dioxide in inspired air percent by volume
Not more than 30 minutes	2.5
1 hour	2.0
2 hours	1.5
3 hours	1.0
4 hours	1.0

(d) In addition to the test requirements for closed-circuit apparatus set forth in paragraph (b) of this section, gas samples will be taken during the course of the man tests described in Tables 1, 2, 3, and 4 of this subpart. These gas samples will be taken from the closed-circuit apparatus at a point downstream of the carbon dioxide sorbent, and they shall not contain more than 0.5 percent carbon dioxide at any time, except on apparatus for escape only, using a mouthpiece only, the sample shall not contain more than 1.5 percent carbon dioxide at any time.

§ 84.98 Tests during low temperature operation.

(a) The applicant shall specify the minimum temperature for safe operation and two persons will perform the tests described in paragraphs (c) and (d) of this section, wearing the apparatus according to applicant's directions. At the specified temperature, the apparatus shall meet all the requirements described in paragraph (e) of this section.

(b) The apparatus will be precooled at the specified minimum temperature for 4 hours.

(c) The apparatus will be worn in the low temperature chamber for 30 minutes, or for the service time of the apparatus, whichever is less.

(d) During the test period, alternate 1-minute periods of exercise and rest will be required with the exercise periods consisting of stepping onto and off a box 21.5 cm. (8½ inches) high at a rate of 30 cycles per minute.

(e)(1) The apparatus shall function satisfactorily at the specified minimum temperature on duplicate tests.

(2) The wearer shall have sufficient unobscured vision to perform the work.

(3) The wearer shall not experience undue discomfort because of airflow restriction or other physical or chemical changes in the operation of the apparatus.

(f) Auxiliary low-temperature parts which are commercially available to the user may be used on the apparatus to meet the requirements described in paragraph (e) of this section.

§ 84.99 Man tests; testing conditions; general requirements.

(a) The man tests described in Tables 1, 2, 3, and 4 of this subpart represent the workload performed in the mining, mineral, or allied industries by a person wearing the apparatus tested.

(b) The apparatus tested will be worn by Institute personnel trained in the use of self-contained breathing apparatus, and the wearer will, before participating in these tests, pass a physical examination conducted by a qualified physician.

(c) All man tests will be conducted by the Institute.

(d) The apparatus will be examined before each man test to ensure that it is in proper working order.

(e) Breathing resistance will be measured within the facepiece or mouthpiece and the wearer's pulse and respiration rate will be recorded during each 2 minute sample period prescribed in tests 1, 2, 3, and 4.

(f) Man tests 1, 2, 3, 4, 5, and 6 will be conducted in duplicate.

(g) If man tests are not completed through no fault of the apparatus, the test will be repeated.

§ 84.100 Man tests 1, 2, 3, and 4; requirements.

Man tests 1, 2, 3, and 4, set forth in Tables 1, 2, 3, and 4 of this subpart, respectively, prescribe the duration and sequence of specific activities. These tests will be conducted to—

(a) Familiarize the wearer with the apparatus during use;

(b) Provide for a gradual increase in activity;

(c) Evaluate the apparatus under different types of work and physical orientation; and

(d) Provide information on the operating and breathing characteristics of the apparatus during actual use.

§ 84.101 Man test 5; requirements.

(a) Test 5 will be conducted to determine the maximum length of time the apparatus will supply the respiratory needs of the wearer while he is sitting at rest.

(b) The wearer will manipulate the devices controlling the supply of breathing gas to the advantage of the apparatus.

(c) Samples of inspiration from within the apparatus facepiece or mouthpiece shall be taken once every 15 minutes, and shall meet the minimum requirement for oxygen specified in § 84.79(a), and the maximum allowable average concentration of carbon dioxide specified in § 84.97(c).

(d) One sample of inspiration will be taken in the case of 3-, 5-, and 10-minute apparatus.

§ 84.102 Man test 6; requirements.

(a) Man test 6 will be conducted with respect to liquefied breathing gas apparatus only.

(b) This test will be conducted to evaluate operation of the apparatus in other than vertical positions.

(c) The wearer will lie face downward for one-fourth the service life of the apparatus with a full charge of liquefied breathing gas, and then a one-quarter full charge of liquefied breathing gas.

(d) The test will be repeated with the wearer lying on each side and on his back.

(e) The oxygen content of the gas supplied to the wearer by the apparatus will be continuously measured.

§ 84.103 Man tests; performance requirements.

(a) The apparatus shall satisfy the respiratory requirements of the wearer for the classified service time.

(b) Fogging of the eyepiece shall not obscure the wearer's vision, and the wearer shall not experience undue discomfort because of fit or other characteristics of the apparatus.

(c) When the ambient temperature during testing is 24 ±6 °C. (75 ±10 °F.), the maximum temperature of inspired air recorded during man tests shall not exceed the following, after correction for deviation from 24 °C. (75 °F.):

Where service life of apparatus is—	Where percent relative humidity of inspired air is—	Maximum permissible temperature of inspired air shall not exceed—	
		°F.	°C.
¼ hour or less	0–100	135	57
¼ hour to ¾ hour	0–50	125	52
	50–100	[1] 110	[1] 43
1 to 2 hours	0–50	115	46
	50–100	[1] 105	[1] 41
3 hours	0–50	110	43
	50–100	[1] 100	[1] 38
4 hours	0–50	105	41
	50–100	[1] 95	[1] 35

[1] Where percent relative humidity is 50–100 and apparatus is designed for escape only, these maximum permissible temperatures will be increased by 5 °C (10 °F).

§ 84.104 Gas tightness test; minimum requirements.

(a) Each apparatus will be tested for tightness by persons wearing it in an atmosphere of 1,000 p.p.m. isoamyl acetate.

(b) Six persons will each wear the apparatus in the test concentrations specified in paragraph (a) of this section for 2 minutes and none shall detect the odor or taste of the test vapor.

TABLES TO SUBPART H OF PART 84

TABLE 1—DURATION AND SEQUENCE OF SPECIFIC ACTIVITIES FOR TEST 1, IN MINUTES

[42 CFR part 84, subpart H]

Activity	Service time—							
	3 minutes	5 minutes	10 minutes	15 minutes	30 minutes	45 minutes	1 hour	2, 3, and 4 hours
Sampling and readings	.....	.....	.....	2	2	2	2	Perform 1 hour test 2, 3, or 4 times respectively.
Walks at 4.8 km. (3 miles) per hour.	3	5	3	4	8	12	18	
Sampling and readings	.....	.....	2	2	2	2	2	
Walks at 4.8 km. (3 miles) per hour.	.....	.....	3	5	8	12	18	
Sampling and readings	.....	.....	2	2	2	2	2	
Walks at 4.8 km. (3 miles) per hour.	.....	.....	.....	.....	6	13	16	
Sampling and readings	.....	.....	.....	.....	2	2	2	

TABLE 2—DURATION AND SEQUENCE OF SPECIFIC ACTIVITIES FOR TEST 2, IN MINUTES

[42 CFR part 84, subpart H]

Activity	Service time—							
	3 minutes	5 minutes	10 minutes	15 minutes	30 minutes	45 minutes	1 hour	2, 3 and 4 hours [1]
Sampling and readings	.....	.....	.....	2	2	2	2	2
Walks at 4.8 km. (3 miles) per hour	.....	.....	1	1	3	4	6	10.
Carries 23 kg. (50 pound) weight over overcast	.....	.....	1 time in 2 minutes	1 time in 2 minutes	2 times in 4 minutes	3 times in 6 minutes	4 times in 8 minutes	5 times in 10 minutes.
Walks at 4.8 km. (3 miles) per hour	.....	.....	.....	1	3	3	3	5.
Climbs vertical treadmill [2] (or equivalent)	1	1	1	1	1	1	1	1.
Walks at 4.8 km. (3 miles) per hour	.....	1	1	.....	.....	2	3	5
Climbs vertical treadmill (or equivalent)	.....	1	.....	.....	.....	1	1	1.
Sampling and readings	.....	.....	.....	.....	2	2	2	2.
Walks at 4.8 km. (3 miles) per hour	.....	.....	.....	2	2	3	5	11.
Climbs vertical treadmill (or equivalent)	.....	.....	.....	1	1	1	1	1.
Carries 23 kg. (50 pound) weight over overcast	.....	.....	.....	1 time in 2 minutes	3 times in 6 minutes	4 times in 8 minutes	5 times in 10 minutes	5 times in 10 minutes.
Sampling and readings	.....	.....	2	.....	.....	2	2	2.
Walks at 4.8 km. (3 miles) per hour	.....	.....	.....	1	3	3	3	.....
Climbs vertical treadmill (or equivalent)	.....	.....	1	1	1	1	1	Then repeat above activities once.
Walks at 4.8 km. (3 miles) per hour	.....	.....	2	.....	.....	2	3	
Climbs vertical treadmill (or equivalent)	.....	.....	.....	.....	.....	1	1	.....
Carries 20 kg. (45 pound) weight and walks at 4.8 km. (3 miles) per hour	1	.....	.....	.....	.....	.....	2	.....
Walks at 4.8 km. (3 miles) per hour	1	2	.....	.....	.....	1	4	.....

TABLE 2—DURATION AND SEQUENCE OF SPECIFIC ACTIVITIES FOR TEST 2, IN MINUTES—Continued

[42 CFR part 84, subpart H]

Activity	Service time—							
	3 minutes	5 minutes	10 minutes	15 minutes	30 minutes	45 minutes	1 hour	2, 3 and 4 hours [1]
Sampling and readings	.....	.....	.....	2	2	2	2	.....

[1] Total test time for Test 2 for 2-hour, 3-hour, and 4-hour apparatus is 2 hours.
[2] Treadmill shall be inclined 15° from vertical and operated at a speed of 1 foot per second.

TABLE 3—DURATION AND SEQUENCE OF SPECIFIC ACTIVITIES FOR TEST 3, IN MINUTES

[42 CFR part 84, subpart H]

Activity	Service time—							
	3 minutes	5 minutes	10 minutes	15 minutes	30 minutes	45 minutes	1 hour	2, 3 and 4 hours [1]
Sampling and readings	.....	.....	.....	2	2	2	2	(2)
Walks at 4.8 km. (3 miles) per hour	.....	.....	1	1	2	2	3	.....
Runs at 9.7 km. (6 miles) per hour	1	1	1	1	1	1	1	.....
Pulls 20 kg. (45 pound) weight to 5 feet	.....	15 times in 1 minute	.....	30 times in 2 minutes	30 times in 2 minutes	30 times in 2 minutes	60 times in 6 minutes	.....
Lies on side	1/2	1	1	2	3	4	5	.....
Lies on back	1/2	1	1	2	2	3	3	.....
Crawls on hands and knees	1	1	1	2	2	2	2	.....
Sampling and readings	.....	.....	2	.....	2	2	2	.....
Runs at 9.7 km. (6 miles) per hour	.....	.....	.....	1	1	1	1	.....
Walks at 4.8 km. (3 miles) per hour	.....	.....	.....	.....	2	8	10	.....
Pulls 20 kg. (45 pound) weight to 5 feet	.....	.....	30 times in 2 minutes	.....	60 times in 6 minutes	60 times in 6 minutes	60 times in 6 minutes	.....
Sampling and readings	.....	.....	.....	2	.....	2	2	.....
Walks at 4.8 km. (3 miles) per hour	.....	.....	1	.....	3	4	10	.....
Lies on side	.....	.....	.....	.....	.....	2	4	.....
Lies on back	.....	.....	.....	.....	.....	2	1	.....
Sampling and readings	.....	.....	.....	.....	2	2	2	.....

[1] Total test time for Test 3 for 2-hour, 3-hour, and 4-hour apparatus is 2 hours.
[2] Perform test No. 3 for 1 hr. apparatus; then perform test No. 1 for 1 hour apparatus.

TABLE 4—DURATION AND SEQUENCE OF SPECIFIC ACTIVITIES FOR TEST 4, IN MINUTES

[42 CFR part 84, subpart H]

Activity	Service time—									
	3 minutes	5 minutes	10 minutes	15 minutes	30 minutes	45 minutes	1 hour	2 hours	3 hours	4 hours
Sampling and readings	.....	.....	.....	2	2	2	2	(2)	(3)	(4)
Walks at 4.8 km. (3 miles) per hour	.....	.....	.....	1	2	2	2	.....	.....	.....
Climbs vertical treadmill [1] (or equivalent)	1	1	1	1	1	1	1	.....	.....	.....
Walks at 4.8 km. (3 miles) per hour	.....	1	1	1	2	2	2	.....	.....	.....
Pulls 20 kg. (45 pound) weight to 5 feet	.....	30 times in 2 minutes	30 times in 2 minutes	30 times in 2 minutes	60 times in 5 minutes	60 times in 5 minutes	60 times in 5 minutes	.....	.....	.....
Walks at 4.8 km. (3 miles) per hour	.....	.....	1	1	1	2	3	.....	.....	.....

TABLE 4—DURATION AND SEQUENCE OF SPECIFIC ACTIVITIES FOR TEST 4, IN MINUTES—Continued

[42 CFR part 84, subpart H]

Activity	Service time—									
	3 minutes	5 minutes	10 minutes	15 minutes	30 minutes	45 minutes	1 hour	2 hours	3 hours	4 hours
Carries 23 kg. (50 pound) weight over overcast	.....	.....	.....	1 time in 1 minute	1 time in 1 minute	2 times in 3 minutes	4 times in 8 minutes	.....	.....	.....
Sampling and readings	.....	.....	2	.....	2	2	2	.....	.....	.....
Walks at 4.8 km. (3 miles) per hour	.....	.....	.....	1	3	3	4	.....	.....	.....
Runs at 9.7 km. (6 miles) per hour	.....	1	1	1	1	1	1	.....	.....	.....
Carries 23 kg. (50 pound) weight over overcast	.....	.....	1 time in 1 minute	1 time in 1 minute	2 times in 3 minutes	4 times in 6 minutes	6 times in 9 minutes	.....	.....	.....
Pulls 20 kg (45 pound) weight to 5 feet	15 times in 1 minute	.....	.....	15 times in 1 minute	60 times in 5 minutes	30 times in 2 minutes	36 times in 3 minutes	.....	.....	.....
Sampling and readings	.....	.....	.....	2	2	2	2	.....	.....	.....
Walks at 4.8 km. (3 miles) per hour	1	.....	1	.....	.....	2	6	.....	.....	
Pulls 20 kg. (45 pound) weight to 5 feet	.....	.....	.....	.....	.....	60 times in 5 minutes	60 times in 5 minutes	.....	.....	.....
Carries 20 kg. (45 pound) weight and walks at 4.8 km. (3 miles) per hour	.....	.....	.....	.....	.....	3	3	.....	.....	.....
Sampling and readings	.....	.....	.....	.....	.....	2	2	.....	.....	.....

[1] Treadmill shall be inclined 15° from vertical and operated at a speed of 30 cm. (1 foot) per second.

[2] Perform test No. 1 for 30-minute apparatus; then perform test No. 4 for 1-hour apparatus; then perform test No. 1 for 30-minute apparatus.

[3] Perform test No. 1 for 1-hour apparatus; then perform test No. 4 for 1-hour apparatus; then perform test No. 1 for 1-hour apparatus.

[4] Perform test No. 1 for 1-hour apparatus; then perform test No. 4 for 1-hour apparatus; then perform test No. 1 for 1-hour apparatus twice (i.e., two one-hour tests).

Subpart I—Gas Masks

§ 84.110 Gas masks; description.

(a) Gas masks including all completely assembled air purifying masks designed for use as respiratory protection during entry into atmospheres not immediately dangerous to life or health or escape only from hazardous atmospheres containing adequate oxygen to support life are described as follows:

(1) *Front-mounted or back-mounted gas mask.* A gas mask which consists of a full facepiece, a breathing tube, a canister at the front or back, a canister harness, and associated connections.

(2) *Chin-style gas mask.* A gas mask which consists of a full facepiece, a canister which is usually attached to the facepiece, and associated connections.

(3) *Escape gas mask*. A gas mask designed for use during escape only from hazardous atmospheres which consists of a facepiece or mouthpiece, a canister, and associated connections.

(b) Gas masks shall be further described according to the types of gases or vapors against which they are designed to provide respiratory protection, as follows:

Type of front-mounted or back-mounted gas mask:
- Acid gas [1,2,3]
- Ammonia
- Carbon monoxide
- Organic Vapor [1,2,3]
- Other gas(es) and vapor(s) [1,2,3]
- Combination of two or more of the above gases and vapors. [1,2,3]
- Combination of acid gas, ammonia, carbon monoxide, and organic vapors. [1,2,3]

Type of chin-style gas mask:
- Acid gas [1,2,3]
- Ammonia
- Carbon monoxide
- Organic vapor [1,2,3]
- Other gas(es) and vapor [1,2,3]
- Combination of two or more of the above gases and vapors. [1,2,3]

Type of escape gas mask:
- Acid gas [1,2,3,4]
- Ammonia [4]
- Carbon monoxide
- Organic vapor [1,2,3,4]
- Other gas(s) and vapor(s) [1,2,3,4]
- Combination of two or more of the above gases and vapors. [1,2,3,4]

[1] Approval may be for acid gases or organic vapors as a class or for specific acid gases or organic vapors.

[2] Not for use against gases or vapors with poor warning properties (except where MSHA or Occupational Safety and Health Administration standards permit such use for a specific gas or vapor), or those which generate high heats or reaction with sorbent materials in the canister.

[3] Use of the gas mask may be limited by factors such as lower explosive limit, toxicological effects, and facepiece fit. Limitations on gas mask service life and sorbent capacity limitations shall be specified by the applicant in instructions for selection, use and maintenance of the gas mask.

[4] Eye protection may be required in certain concentrations of gases and vapors.

(c) Gas masks for respiratory protection against gases and vapors other than those specified in paragraph (b) of this section, may be approved upon submittal of an application in writing for approval to the Certification and Quality Assurance Branch listing the gas or vapor and suggested maximum use concentration for the specific type of gas mask. The Institute will consider the application and accept or reject it on the basis of effect on the wearer's health and safety and any field experience in use of gas masks for such exposures. If the application is accepted, the Institute will test such masks in accordance with the requirements of this subpart.

§ 84.111 Gas masks; required components.

(a) Each gas mask described in § 84.110 shall, where its design requires, contain the following component parts:

(1) Facepiece or mouthpiece and noseclip;

(2) Canister or cartridge;

(3) Canister harness;

(4) External check valve; and

(5) Breathing tube.

(b) The components of each gas mask shall meet the minimum construction requirements set forth in subpart G of this part.

§ 84.112 Canisters and cartridges in parallel; resistance requirements.

Where two or more canisters or cartridges are used in parallel, their resistance to airflow shall be essentially equal.

§ 84.113 Canisters and cartridges; color and markings; requirements.

The color and markings of all canisters and cartridges or labels shall conform with the requirements of the American National Standards Institute, American National Standard for Identification of Air-Purifying Respirator Canisters and Cartridges, ANSI K13.1–1973. ANSI K13.1 is incorporated by reference and has been approved by the Director of the Federal Register in accordance with 5 U.S.C. 552(a) and 1 CFR part 51. Copies may be obtained from American National Standards Institute, Inc., 1430 Broadway, New York, NY 10018. Copies may be inspected at the NIOSH, Certification and Quality Assurance Branch, 1095 Willowdale Road, Morgantown, WV 26505–2888, or at the National Archives and Records Administration (NARA). For information on the availability of this material at NARA, call 202–741–6030, or go to: *http://www.archives.gov/federal_register/code_of_federal_regulations/ibr_locations.html*.

§ 84.114 Filters used with canisters and cartridges; location; replacement.

(a) Particulate matter filters used in conjunction with a canister or cartridge shall be located on the inlet side of the canister or cartridge.

(b) Filters shall be incorporated in or firmly attached to the canister or cartridge and each filter assembly shall, where applicable, be designed to permit its easy removal from and replacement in the canister or cartridge.

§ 84.115 Breathing tubes; minimum requirements.

Flexible breathing tubes used in conjunction with gas masks shall be designed and constructed to prevent:

(a) Restriction of free head movement;

(b) Disturbance of the fit of facepieces or mouthpieces;

(c) Interference with the wearer's activities; and

(d) Shutoff of airflow due to kinking, or from chin or arm pressure.

§ 84.116 Harnesses; installation and construction; minimum requirements.

(a) Each gas mask shall, where necessary, be equipped with a suitable harness designed and constructed to hold the components of the gas mask in position against the wearer's body.

(b) Harnesses shall be designed and constructed to permit easy removal and replacement of gas mask parts, and where applicable, provide for holding a full facepiece in the ready position when not in use.

§ 84.117 Gas mask containers; minimum requirements.

(a) Gas masks shall be equipped with a substantial, durable container bearing markings which show the applicant's name, the type and commercial designation of mask it contains and all appropriate approval labels.

(b) Containers for gas masks shall be designed and constructed to permit easy removal of the mask.

§ 84.118 Half-mask facepieces, full facepieces, and mouthpieces; fit; minimum requirements.

(a) Half-mask facepieces and full facepieces shall be designed and constructed to fit persons with various facial shapes and sizes either:

(1) By providing more than one facepiece size; or

(2) By providing one facepiece size which will fit varying facial shapes and sizes.

(b) Full facepieces shall provide for optional use of corrective spectacles or lenses, which shall not reduce the respiratory protective qualities of the gas mask.

(c) Half-mask facepieces shall not interfere with the fit of common industrial safety spectacles, as determined by the Institute's facepiece tests in § 84.124.

(d) Gas masks with mouthpieces shall be equipped with noseclips which are securely attached to the mouthpiece or gas mask and provide an airtight seal.

(e) Facepieces shall be designed to prevent eyepiece fogging.

§ 84.119 Facepieces; eyepieces; minimum requirements.

(a) Full facepieces shall be designed and constructed to provide adequate vision which is not distorted by the eye.

(b) All eyepieces shall be designed and constructed to be impact and penetration resistant. Federal Specification, Mask, Air Line: and Respirator, Air Filtering, Industrial, GGG-M-125d, October 11, 1965 with interim amendment-1, July 30, 1969, is an example of an appropriate standard for determining impact and penetration resistance. Copies of GGG-M-125d may be obtained from the NIOSH, Certification and Quality Assurance Branch, 1095 Willowdale Road, Morgantown, WV 26505–2888.

§ 84.120 Inhalation and exhalation valves; minimum requirements.

(a) Inhalation and exhalation valves shall be provided where necessary and protected against damage and distortion.

(b) Inhalation valves shall be designed and constructed to prevent excessive exhaled air from adversely affecting cartridges, canisters, and filters.

(c) Exhalation valves shall be protected against external influence, and designed and constructed to prevent inward leakage of contaminated air.

§ 84.121 Head harnesses; minimum requirements.

(a) Facepieces shall be equipped with adjustable and replaceable head harnesses, designed and constructed to provide adequate tension during use and an even distribution of pressure over the entire area in contact with the face.

(b) Mouthpieces shall be equipped, where applicable, with adjustable and replaceable harnesses designed and constructed to hold the mouthpiece in place.

§ 84.122 Breathing resistance test; minimum requirements.

(a) Resistance to airflow will be measured in the facepiece or mouthpiece of a gas mask mounted on a breathing machine both before and after each test conducted in accordance with §§ 84.124, 84.125, and 84.126, with air flowing at a continuous rate of 85 liters per minute.

(b) The maximum allowable resistance requirements for gas masks are as follows:

MAXIMUM RESISTANCE

[mm. water-column height]

Type of gas mask	Inhalation		Exhalation
	Initial	Final [1]	
Front-mounted or back-mounted (without particulate filter)	60	75	20
Front-mounted or back-mounted (with approved particulate filter)	70	85	20
Chin-style (without particulate filter)	40	55	20
Chin-style (with approved particulate filter)	65	80	20
Escape (without particulate filter)	60	75	20
Escape (with approved particulate filter)	70	85	20

[1] Measured at end of the service life specified in Tables 5, 6, and 7 of this subpart.

§ 84.123 Exhalation valve leakage test.

(a) Dry exhalation valves and valve seats will be subjected to a suction of 25 mm. water-column height while in a normal operating position.

(b) Leakage between the valve and valve seat shall not exceed 30 milliliters per minute.

§ 84.124 Facepiece tests; minimum requirements.

(a) The complete gas mask will be fitted to the faces of persons having varying facial shapes and sizes.

(b) Where the applicant specifies a facepiece size or sizes for the gas mask, together with the approximate measurements of faces they are designed to fit, the Institute will insure that test subjects suit such facial measurements.

(c) Any gas mask parts which must be removed to perform the facepiece or mouthpiece fit test shall be replaceable without special tools and without disturbing the facepiece or mouthpiece fit.

(d) The facepiece or mouthpiece fit test, using positive or negative pressure recommended by the applicant and described in his instructions will be used before each test specified in paragraph (e) of this section, and in § 84.125.

(e)(1) Each wearer will enter a chamber containing 100 p.p.m. isoamyl acetate vapor for a half-mask facepiece and 1,000 p.p.m. isoamyl acetate vapor for a full facepiece or mouthpiece.

(2) The facepiece or mouthpiece may be adjusted, if necessary, in the test chamber before starting the tests.

(3) Each wearer will remain in the chamber for 8 minutes while performing the following activities:

(i) Two minutes, nodding and turning head;

(ii) Two minutes, calisthenic arm movements;

(iii) Two minutes, running in place; and

(iv) Two minutes, pumping with a tire pump into a 28 liter (1 cubic foot) container.

(4) Each wearer shall not detect the odor of isoamyl acetate during the test.

§ 84.125 Particulate tests; canisters containing particulate filters; minimum requirements.

Gas mask canisters containing filters for protection against particulates (e.g. dusts, fumes, mists, and smokes) in combination with gases, vapors, or gases and vapors, shall also comply with the requirements as prescribed in §§ 84.170 through 84.183, except for the airflow resistance test of § 84.181.

§ 84.126 Canister bench tests; minimum requirements.

(a)(1) Bench tests, except for carbon monoxide tests, will be made on an apparatus that allows the test atmosphere at 50 ±5 percent relative humidity and room temperature (25 ±2.5 °C.) to enter the canister continuously at concentrations and rates of flow specified in Tables 5, 6, and 7 of this subpart.

(2) Three canisters will be removed from containers and tested as received from the applicant.

(3) Two canisters, other than those described in paragraph (a)(2) of this section, will be equilibrated at room temperature by passing 25 percent relative humidity air through them at 64 liters per minute for 6 hours.

(4) Two canisters, other than those described in paragraphs (a) (2) and (3) of this section, will be equilibrated at room temperature by passing 85 percent relative humidity air through them at 64 liters per minute for 6 hours.

(5) The equilibrated canisters will be resealed, kept in an upright position at room temperature, and tested within 18 hours.

(b) Front-mounted and back-mounted gas mask canisters will be tested and shall meet the minimum requirements set forth in Table 5 of this subpart.

(c)(1) Front-mounted, and back-mounted, and chin-style canisters designated as providing respiratory protection against gases, ammonia, organic vapors, carbon monoxide and particulate contaminants shall have a window or other indicator to warn the gas mask wearer when the canister will no longer satisfactorily remove carbon monoxide from the inhaled air.

(2) Other types of front- and back-mounted canisters may also be equipped with a window or other indicator to warn of imminent leakage of other gases or vapors.

(3) The window indicator canisters will be tested as regular canisters, but shall show a satisfactory indicator change or other warning before the allowable canister penetration has occurred.

(d) Chin-style gas mask canisters shall meet the minimum requirements set forth in Table 6 of this subpart.

(e) Escape gas mask canisters shall meet the minimum requirements set forth in Table 7 of this subpart.

TABLES TO SUBPART I OF PART 84

TABLE 5—CANISTER BENCH TESTS AND REQUIREMENTS FOR FRONT-MOUNTED AND BACK-MOUNTED GAS MASK CANISTERS

[42 CFR part 84, subpart I]

Canister type	Test condition	Test atmosphere			Number of tests	Maximum allowable penetratin (parts per million)	Minimum service life (minutes) [1]
		Gas or vapor	Concentration (parts per million)	Flow rate (liters per minute)			
Acid gas	As received	SO_2	20,000	64	3	5	12
	Equilibrated	Cl_2	20,000	64	3	5	12
		SO_2	20,000	32	4	5	12
		Cl_2	20,000	32	4	5	12
Organic vapor	As received	CCl_4	20,000	64	3	5	12
	Equilibrated	CCl_4	20,000	32	4	5	12
Ammonia	As received	NH_3	30,000	64	3	50	12
	Equilibrated	NH_3	30,000	32	4	50	12
Carbon monoxide	As received	CO	20,000	[4] 64	2	([3])	60

TABLE 5—CANISTER BENCH TESTS AND REQUIREMENTS FOR FRONT-MOUNTED AND BACK-MOUNTED GAS MASK CANISTERS—Continued

[42 CFR part 84, subpart I]

Canister type	Test condition	Test atmosphere			Number of tests	Maximum allowable penetratin (parts per million)	Minimum service life (minutes) [1]
		Gas or vapor	Concentration (parts per million)	Flow rate (liters per minute)			
	Equilibrated	CO	5,000	[2] 32	3	([3])	60
		CO	3,000	[2] 32	3	([3])	60
Combination of 2 or 3 of above types [5]							
Combination of all above types [6]							

[1] Minimum life will be determined at the indicated penetration.
[2] Relative humidity of test atmosphere will be 95 ±3pct; temperature of test atmosphere will be 25 ±2.5 °C.
[3] Maximum allowable CO penetration will be 385 cm[3] during the minimum life. The penetration shall not exceed 500 p/m during this time.
[4] Relative humidity of test atmosphere will be 95 ±3pct; temperature of test atmosphere entering the test fixture will be 0 ±2.5 °C – 0 °C.
[5] Test conditions and requirements will be applicable as shown in this table.
[6] Test conditions and requirements will be applicable as shown in this table, except the minimum service lives for acid gas, organic vapor, and ammonia will be 6 min instead of 12 min.

TABLE 6—CANISTER BENCH TESTS AND REQUIREMENTS FOR CHIN-STYLE GAS MASK CANISTERS

[42 CFR part 84, subpart I]

Canister type	Test condition	Test atmosphere			Number of tests	Maximum allowable penetration (parts per million)	Minimum service life (minutes) [1]
		Gas or vapor	Concentration (parts per million)	Flow rate (liters per minute)			
Acid gas	As received Equilibrated	SO_2	50,000	64	3	5	12
		Cl_2	5,000	64	3	5	12
		SO_2	5,000	32	4	5	12
		Cl_2	5,000	32	4	5	12
Organic vapor	As received Equilibrated	CCl_4	5,000	64	3	5	12
		CCl_4	5,000	32	4	5	12
Ammonia	As received Equilibrated	NH_3	5,000	64	3	50	12
	As received Equilibrated	NH_3	5,000	32	4	50	12
Carbon monoxide	As received	CO	20,000	[2] 64	2	([3])	60
		CO	5,000	[4] 32	3	([3])	60
		CO	3,000	[2] 32	3	([3])	60
Combination of 2 or 3 of above types [5]							
Combination of all above types [6]							

[1] Minimum life will be determined at the indicated penetration.
[2] Relative humidity of test atmosphere will be 95 ±3pct; temperature of test atmosphere will be 25 ±2.5 °C.
[3] Maximum allowable CO penetration will be 385 cm[3] during the minimum life. The penetration shall not exceed 500 p/m during this time.
[4] Relative humidity of test atmosphere will be 95 ±3pct; temperature of test atmosphere entering the test fixture will be 0 ±2.5 °C – 0 °C.
[5] Test conditions and requirements will be applicable as shown in this table.
[6] Test conditions and requirements will be applicable as shown in this table, except the minimum service lives for acid gas, organic vapor, and ammonia will be 6 min instead of 12 min.

TABLE 7—CANISTER BENCH TESTS AND REQUIREMENTS FOR ESCAPE GAS MASK CANISTERS

[42 CFR part 84, subpart I]

Canister type	Test condition	Test atmosphere			Number of tests	Maximum allowable penetration (parts per million)	Minimum service life (minutes) [1]
		Gas or vapor	Concentration (parts per million)	Flow rate (liters per minute)			
Acid gas	As received	SO_2	5,000	64	3	5	12
	Equilibrated	Cl_2	5,000	64	3	5	12
		SO_2	5,000	32	4	5	12
		Cl_2	5,000	32	4	5	12

TABLE 7—CANISTER BENCH TESTS AND REQUIREMENTS FOR ESCAPE GAS MASK CANISTERS—Continued

[42 CFR part 84, subpart I]

Canister type	Test condition	Test atmosphere			Number of tests	Maximum allowable penetration (parts per million)	Minimum service life (minutes) [1]
		Gas or vapor	Concentration (parts per million)	Flow rate (liters per minute)			
Organic vapor	As received	CCl_4	5,000	64	3	5	12
	Equilibrated	CCl_4	5,000	32	4	5	12
Ammonia	As received	NH_3	5,000	64	3	50	12
	Equilibrated	NH_3	5,000	32	4	50	12
Carbon monoxide	As received	CO	10,000	[2] 32	2	([3])	[4] 60
		CO	5,000	[5] 32	3	([3])	60
		CO	3,000	[2] 32	3	([3])	60

[1] Minimum life will be determined at the indicated penetration.
[2] Relative humidity of test atmosphere will be 95 ±3 pct; temperature of test atmosphere will be 25 ±2.5 °C.
[3] Maximum allowable CO penetration will be 385 cm^3 during the minimum life. The penetration shall not exceed 500 p/m during this time.
[4] If effluent temperature exceeds 100 °C during this test, the escape gas mask shall be equipped with an effective heat exchanger.
[5] Relative humidity of test atmosphere will be 95 ±3 pct; temperature of test atmosphere entering the test fixture will be 0 ±2.5 °C − 0 °C.

Subpart J—Supplied-Air Respirators

§ 84.130 Supplied-air respirators; description.

Supplied-air respirators, including all completely assembled respirators designed for use as respiratory protection during entry into and escape from atmospheres not immediately dangerous to life or health are described as follows:

(a) *Type ''A'' supplied-air respirators.* A hose mask respirator, for entry into and escape from atmospheres not immediately dangerous to life or health, which consists of a motor-driven or hand-operated blower that permits the free entrance of air when the blower is not operating, a strong large-diameter hose having a low resistance to airflow, a harness to which the hose and the life-line are attached and a tight-fitting facepiece.

(b) *Type ''AE'' supplied-air respirators.* A Type ''A'' supplied-air respirator equipped with additional devices designed to protect the wearer's head and neck against impact and abrasion from rebounding abrasive material, and with shielding material such as plastic, glass, woven wire, sheet metal, or other suitable material to protect the window(s) of facepieces, hoods, and helmets which do not unduly interfere with the wearer's vision and permit easy access to the external surface of such window(s) for cleaning.

(c) *Type ''B'' supplied-air respirators.* A hose mask respirator, for entry into and escape from atmospheres not immediately dangerous to life or health, which consists of a strong large-diameter hose with low resistance to airflow through which the user draws inspired air by means of his lungs alone, a harness to which the hose is attached, and a tight-fitting facepiece.

(d) *Type ''BE'' supplied-air respirators.* A type ''B'' supplied-air respirator equipped with additional devices designed to protect the wearer's head and neck against impact and abrasion from rebounding abrasive material, and with shielding material such as plastic, glass, woven wire, sheet metal, or other suitable material to protect the window(s) of facepieces, hoods, and helmets which do not unduly interfere with the wearer's vision and permit easy access to the external surface of such window(s) for cleaning.

(e) *Type ''C'' supplied-air respirators.* An airline respirator, for entry into and escape from atmospheres not immediately dangerous to life or health, which consists of a source of respirable breathing air, a hose, a detachable coupling, a control valve, orifice, a demand valve or pressure demand valve, an arrangement for attaching the hose to the wearer, and a facepiece, hood, or helmet.

(f) *Type ''CE'' supplied-air respirators.* A type ''C'' supplied-air respirator equipped with additional devices designed to protect the wearer's head and neck against impact and abrasion from rebounding abrasive material, and with shielding material such as plastic, glass, woven wire, sheet metal, or other suitable material to protect the window(s) of facepieces, hoods, and helmets which do not unduly interfere with the wearer's vision and permit easy access to the external surface of such window(s) for cleaning.

§ 84.131 Supplied-air respirators; required components.

(a) Each supplied-air respirator described in § 84.130 shall, where its design requires, contain the following component parts:

(1) Facepiece, hood, or helmet;

(2) Air supply valve, orifice, or demand or pressure-demand regulator;

(3) Hand operated or motor driven air blower;

(4) Air supply hose;

(5) Detachable couplings;

(6) Flexible breathing tube; and

(7) Respirator harness.

(b) The component parts of each supplied-air respirator shall meet the minimum construction requirements set forth in subpart G of this part.

§ 84.132 Breathing tubes; minimum requirements.

Flexible breathing tubes used in conjunction with supplied-air respirators shall be designed and constructed to prevent:

(a) Restriction of free head movement;

(b) Disturbance of the fit of facepieces, mouthpieces, hoods, or helmets;

(c) Interference with the wearer's activities; and

(d) Shutoff of airflow due to kinking, or from chin or arm pressure.

§ 84.133 Harnesses; installation and construction; minimum requirements.

(a) Each supplied-air respirator shall, where necessary, be equipped with a suitable harness designed and constructed to hold the components of the respirator in position against the wearer's body.

(b) Harnesses shall be designed and constructed to permit easy removal and replacement of respirator parts, and where applicable, provide for holding a full facepiece in the ready position when not in use.

§ 84.134 Respirator containers; minimum requirements.

Supplied-air respirators shall be equipped with a substantial, durable container bearing markings which show the applicant's name, the type and commercial designation of the respirator it contains, and all appropriate approval labels.

§ 84.135 Half-mask facepieces, full facepieces, hoods, and helmets; fit; minimum requirements.

(a) Half-mask facepieces and full facepieces shall be designed and constructed to fit persons with various facial shapes and sizes either:

(1) By providing more than one facepiece size; or

(2) By providing one facepiece size which will fit varying facial shapes and sizes.

(b) Full facepieces shall provide for optional use of corrective spectacles or lenses, which shall not reduce the respiratory protective qualities of the respirator.

(c) Hoods and helmets shall be designed and constructed to fit persons with various head sizes, provide for the optional use of corrective spectacles or lenses, and insure against any restriction of movement by the wearer.

(d) Facepieces, hoods, and helmets shall be designed to prevent eyepiece fogging.

§ 84.136 Facepieces, hoods, and helmets; eyepieces; minimum requirements.

(a) Facepieces, hoods, and helmets shall be designed and constructed to provide adequate vision which is not distorted by the eyepiece.

(b) All eyepieces except those on Types B, BE, C, and CE supplied-air respirators shall be designed and constructed to be impact and penetration resistant. Federal Specification, Mask, Air Line: and Respirator, Air Filtering,

Industrial, GGG-M-125d, October 11, 1965 with interim amendment-1, July 30, 1969, is an example of an appropriate standard for determining impact and penetration resistance. Copies of GGG-M-125d may be obtained from the NIOSH, Certification and Quality Assurance Branch, 1095 Willowdale Road, Morgantown, WV 26505–2888.

(c)(1) The eyepieces of AE, BE, and CE type supplied-air respirators shall be shielded by plastic, glass, woven wire, sheet metal, or other suitable material which does not interfere with the vision of the wearer.

(2) Shields shall be mounted and attached to the facepiece to provide easy access to the external surface of the eyepiece for cleaning.

§ 84.137 Inhalation and exhalation valves; check valves; minimum requirements.

(a) Inhalation and exhalation valves shall be provided where necessary and protected against distortion.

(b) Exhalation valves shall be:

(1) Protected against damage and external influence; and

(2) Designed and constructed to prevent inward leakage of contaminated air.

(c) Check valves designed and constructed to allow airflow toward the facepiece only shall be provided in the connections to the facepiece or in the hose fitting near the facepiece of all Type A, AE, B, and BE supplied-air respirators.

§ 84.138 Head harnesses; minimum requirements.

Facepieces shall be equipped with adjustable and replaceable head harnesses which are designed and constructed to provide adequate tension during use, and an even distribution of pressure over the entire area in contact with the face.

§ 84.139 Head and neck protection; supplied-air respirators; minimum requirements.

Type AE, BE, and CE supplied-air respirators shall be designed and constructed to provide protection against impact and abrasion from rebounding abrasive materials to the wearer's head and neck.

§ 84.140 Air velocity and noise levels; hoods and helmets; minimum requirements.

Noise levels generated by the respirator will be measured inside the hood or helmet at maximum airflow obtainable within pressure and hose length requirements and shall not exceed 80 dBA.

§ 84.141 Breathing gas; minimum requirements.

(a) Breathing gas used to supply supplied-air respirators shall be respirable breathing air and contain no less than 19.5 volume-percent of oxygen.

(b) Compressed, gaseous breathing air shall meet the applicable minimum grade requirements for Type I gaseous air set forth in the Compressed Gas Association Commodity Specification for Air, G–7.1, 1966 (Grade D or higher quality). G–7.1 is incorporated by reference and has been approved by the Director of the Federal Register in accordance with 5 U.S.C. 552(a) and 1 CFR part 51. Copies may be obtained from American National Standards Institute, Inc., 1430 Broadway, New York, NY 10018. Copies may be inspected at the NIOSH, Certification and Quality Assurance Branch, 1095 Willowdale Road, Morgantown, WV 26505–2888, or at the National Archives and Records Administration (NARA). For information on the availability of this material at NARA, call 202–741–6030, or go to: *http://www.archives.gov/federal_register/code_of_federal_regulations/ibr_locations.html.*

(c) Compressed, liquefied breathing air shall meet the applicable minimum grade requirements for Type II liquid air set forth in the Compressed Gas Association Commodity Specification for Air, G–7.1, 1966 (Grade B or higher quality). G–7.1 is incorporated by reference and has been approved by the Director of the Federal Register in accordance with 5 U.S.C. 552(a) and 1 CFR part 51. Copies may be obtained from American National Standards Institute, Inc., 1430 Broadway, New York, NY 10018. Copies may be inspected at the NIOSH, Certification and Quality Assurance Branch, 1095 Willowdale Road, Morgantown, WV 26505–2888, or at the National Archives and Records Administration

(NARA). For information on the availability of this material at NARA, call 202–741–6030, or go to: *http://www.archives.gov/federal_register/code_of_federal_regulations/ibr_locations.html.*

§ 84.142 Air supply source; hand-operated or motor driven air blowers; Type A supplied-air respirators; minimum requirements.

(a) Blowers shall be designed and constructed to deliver an adequate amount of air to the wearer with either direction of rotation, unless constructed to permit rotation in one direction only, and to permit the free entrance of air to the hose when the blower is not operated.

(b) No multiple systems, whereby more than one user is supplied by one blower, will be approved, unless each hose line is connected directly to a manifold at the blower.

§ 84.143 Terminal fittings or chambers; Type B supplied-air respirators; minimum requirements.

(a) Blowers or connections to air supplies providing positive pressures shall not be approved for use on Type B supplied-air respirators.

(b) Terminal fittings or chambers employed in Type B supplied-air respirators, shall be:

(1) Installed in the inlet of the hose.

(2) Designed and constructed to provide for the drawing of air through corrosion resistant material arranged so as to be capable of removing material larger than 0.149 mm. in diameter (149 micrometers, 100-mesh, U.S. Standard sieve).

(3) Installed to provide a means for fastening or anchoring the fitting or chamber in a fixed position in a zone of respirable air.

§ 84.144 Hand-operated blower test; minimum requirements.

(a) Hand-operated blowers shall be tested by attaching them to a mechanical drive and operating them 6 to 8 hours daily for a period of 100 hours at a speed necessary to deliver 50 liters of air per minute through each completely assembled respirator. Each respirator shall be equipped with the maximum length of hose with which the device is to be approved and the hose shall be connected to each blower or manifold outlet designed for hose connections.

(b) The crank speed of the hand-operated blower shall not exceed 50 revolutions per minute in order to deliver the required 50 liters of air per minute to each facepiece.

(c) The power required to deliver 50 liters of air per minute to each wearer through the maximum length of hose shall not exceed one-fiftieth horsepower, and the torque shall not exceed a force of 2.3 kg. (5 pounds) on a 20 cm. (8-inch) crank, as defined in § 84.146.

(d) The blower shall operate throughout the period without failure or indication of excessive wear of bearings or other working parts.

§ 84.145 Motor-operated blower test; minimum requirements.

(a) Motor-operated blowers shall be tested by operating them at their specified running speed 6 to 8 hours daily for a period of 100 hours when assembled with the kind and maximum length of hose for which the device is to be approved and when connected to each blower or manifold outlet designed for hose connections.

(b) The connection between the motor and the blower shall be so constructed that the motor may be disengaged from the blower when the blower is operated by hand.

(c) The blower shall operate throughout the period without failure or indication of excessive wear of bearings or other working parts.

(d) Where a blower, which is ordinarily motor driven, is operated by hand, the power required to deliver 50 liters of air per minute to each wearer through the maximum length of hose shall not exceed one-fiftieth horsepower, and the torque shall not exceed a force of 2.3 kg. (5 pounds) on a 20 cm. (8-inch) crank, as defined in § 84.146.

(e) Where the respirator is assembled with the facepiece and 15 m. (50 feet) of the hose for which it is to be approved, and when connected to one outlet with all other outlets closed and operated at a speed not exceeding 50 revolutions of the crank per minute, the amount of air delivered into the respiratory-inlet covering shall not exceed 150 liters per minute.

§ 84.146 Method of measuring the power and torque required to operate blowers.

As shown in Figure 1 of this section, the blower crank is replaced by a wooden drum, a (13 cm. (5 inches) in diameter is convenient). This drum is wound with about 12 m. (40 feet) of No. 2 picture cord, b. A weight, c, of sufficient mass to rotate the blower at the desired speed is suspended from this wire cord. A mark is made on the cord about 3 to 4.5 m. (10 to 15 feet) from the weight, c. Another mark is placed at a measured distance (6–9 m./20–30 feet is convenient) from the first. These are used to facilitate timing. To determine the torque or horsepower required to operate the blower, the drum is started in rotation manually at or slightly above the speed at which the power measurement is to be made. The blower is then permitted to assume constant speed, and then as the first mark on the wire leaves the drum, a stopwatch is started. The watch is stopped when the second mark leaves the drum. From these data the foot-pounds per minute and the torque may be calculated.

FIGURE 1—APPARATUS FOR MEASURING POWER REQUIRED TO OPERATE BLOWER. (42 CFR PART 84, SUBPART J, § 84.146)

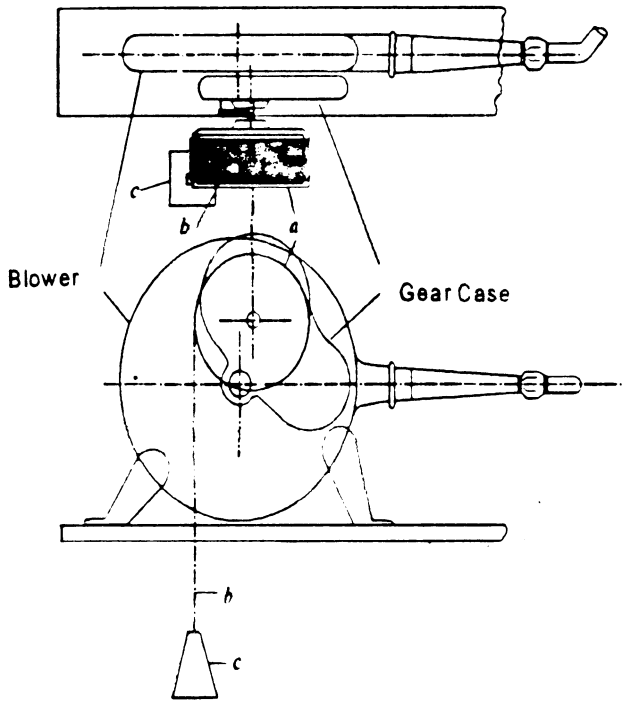

§ 84.147 Type B supplied-air respirator; minimum requirements.

No Type B supplied-air respirator shall be approved for use with a blower or with connection to an air supply device at positive pressures.

§ 84.148 Type C supplied-air respirator, continuous flow class; minimum requirements.

(a) Respirators tested under this section shall be approved only when they

supply respirable air at the pressures and quantities required.

(b) The pressure at the inlet of the hose connection shall not exceed 863 kN/m.^{2} (125 pounds per square inch gage).

(c) Where the pressure at any point in the supply system exceeds 863 kN/m.^{2} (125 pounds per square inch gage), the respirator shall be equipped with a pressure-release mechanism that will prevent the pressure at the hose connection from exceeding 863 kN/m.^{2} (125 pounds per square inch gage) under any conditions.

§ 84.149 Type C supplied-air respirator, demand and pressure demand class; minimum requirements.

(a) Respirators tested under this section shall be approved only when used to supply respirable air at the pressures and quantities required.

(b) The manufacturer shall specify the range of air pressure at the point of attachment of the air-supply hose to the air-supply system, and the range of hose length for the respirator. For example, he might specify that the respirator be used with compressed air at pressures ranging from 280–550 kN/m.^{2} (40 to 80 pounds per square inch) with from 6 to 76 m. (15 to 250 feet) of air-supply hose.

(c) The specified air pressure at the point of attachment of the hose to the air-supply system shall not exceed 863 kN/m.^{2} (125 pounds per square inch gage).

(d)(1) Where the pressure in the air-supply system exceeds 863 kN/m.^{2} (125 pounds per square inch gage), the respirator shall be equipped with a pressure-release mechanism that will prevent the pressure at the point of attachment of the hose to the air-supply system from exceeding 863 kN/m.^{2} (125 pounds per square inch gage).

(2) The pressure-release mechanism shall be set to operate at a pressure not more than 20 percent above the manufacturer's highest specified pressure. For example, if the highest specified pressure is 863 kN/m.^{2} (125 pounds per square inch), the pressure-release mechanism would be set to operate at a maximum of 1,035 kN/m.^{2} (150 pounds per square inch).

§ 84.150 Air-supply line tests; minimum requirements.

Air supply lines employed on Type A, Type B, and Type C supplied-air respirators shall meet the minimum test requirements set forth in Table 8 of this subpart.

§ 84.151 Harness test; minimum requirements.

(a)(1) Shoulder straps employed on Type A supplied-air respirators shall be tested for strength of material, joints, and seams and must separately withstand a pull of 113 kg. (250 pounds) for 30 minutes without failure.

(2) Belts, rings, and attachments for life lines must withstand a pull of 136 kg. (300 pounds) for 30 minutes without failure.

(3) The hose shall be firmly attached to the harness so as to withstand a pull of 113 kg. (250 pounds) for 30 minutes without separating, and the hose attachments shall be arranged so that the pull or drag of the hose behind an advancing wearer does not disarrange the harness or exert pull upon the facepiece.

(4) The arrangement and suitability of all harness accessories and fittings will be considered.

(b)(1) The harness employed on Type B supplied-air respirators shall not be uncomfortable, disturbing, or interfere with the movements of the wearer.

(2) The harness shall be easily adjustable to various sizes.

(3) The hose shall be attached to the harness in a manner that will withstand a pull of 45 kg. (100 pounds) for 30 minutes without separating or showing signs of failure.

(4) The design of the harness and attachment of the line shall permit dragging the maximum length of hose considered for approval over a concrete floor without disarranging the harness or exerting a pull on the facepiece.

(5) The arrangement and suitability of all harness accessories and fittings will be considered.

(c) The harness employed on Type C respirators shall be similar to that required on the Type B respirator, or, it may consist of a simple arrangement for attaching the hose to a part of the wearer's clothing in a practical manner

that prevents a pull equivalent to dragging the maximum length of the hose over a concrete floor from exerting pull upon the respiratory-inlet covering.

(d) Where supplied-air respirators have a rigid or partly rigid head covering, a suitable harness shall be required to assist in holding this covering in place.

§ 84.152 Breathing tube test; minimum requirements.

(a)(1) Type A and Type B supplied-air respirators shall employ one or two flexible breathing tubes of the nonkinking type which extend from the facepiece to a connecting hose coupling attached to the belt or harness.

(2) The breathing tubes employed shall permit free head movement, insure against closing off by kinking or by chin or arm pressure, and they shall not create a pull that will loosen the facepiece or disturb the wearer.

(b) Breathing tubes employed on Type C supplied-air respirators of the continuous flow class shall meet the minimum requirements set forth in paragraph (a) of this section, however, an extension of the connecting hose may be employed in lieu of the breathing tubes required.

(c)(1) A flexible, nonkinking type breathing tube shall:

(i) Be employed on Type C supplied-air respirators of the demand and pressure-demand class; and

(ii) Extend from the facepiece to the demand or pressure-demand valve, except where the valve is attached directly to the facepiece.

(2) The breathing tube shall permit free head movement, insure against closing off by kinking or by chin or arm pressure, and shall not create a pull that will loosen the facepiece or disturb the wearer.

§ 84.153 Airflow resistance test, Type A and Type AE supplied-air respirators; minimum requirements.

(a) Airflow resistance will be determined when the respirator is completely assembled with the respiratory-inlet covering, the air-supply device, and the maximum length of air-supply hose coiled for one-half its length in loops 1.5 to 2.1 m. (5 to 7 feet) in diameter.

(b) The inhalation resistance, drawn at the rate of 85 liters (3 cubic feet) per minute when the blower is not operating or under any practical condition of blower operation shall not exceed the following amounts:

Maximum length of hose for which respirator is approved		Maximum resistance, water column height	
Feet	Meters	Inches	Millimeters
75	23	1.5	38
150	46	2.5	64
250	76	3.5	89
300	91	4.0	102

(c) The exhalation resistance shall not exceed 25 mm. (1 inch) of water-column height at a flow rate of 85 liters (3 cubic feet) per minute when the blower is not operating or under any practical condition of blower operation.

§ 84.154 Airflow resistance test; Type B and Type BE supplied-air respirators; minimum requirements.

(a) Airflow resistance shall be determined when the respirator is completely assembled with the respiratory-inlet covering and the hose in the maximum length to be considered for approval, coiled in loops 1.5 to 2.1 m. (5 to 7 feet) in diameter.

(b) Airflow resistance shall not exceed 38 mm. (1.5 inches) of water-column height to air drawn at the flow rate of 85 liters (3 cubic feet) per minute.

(c) The exhalation resistance shall not exceed 25 mm. (1 inch) of water-column height at this flow rate.

§ 84.155 Airflow resistance test; Type C supplied-air respirator, continuous flow class and Type CE supplied-air respirator; minimum requirements.

The resistance to air flowing from the respirator shall not exceed 25 mm. (1 inch) of water-column height when the air flow into the respiratory-inlet covering is 115 liters (4 cubic feet) per minute.

§ 84.156 Airflow resistance test; Type C supplied-air respirator, demand class; minimum requirements.

(a) Inhalation resistance shall not exceed 50 millimeters (2 inches) of water at an air flow of 115 liters (4 cubic feet) per minute.

(b) The exhalation resistance to a flow of air at a rate of 85 liters (3 cubic feet) per minute shall not exceed 25 millimeters (1 inch) of water.

§ 84.157 Airflow resistance test; Type C supplied-air respirator, pressure-demand class; minimum requirements.

(a) The static pressure in the facepiece shall not exceed 38 mm. (1.5 inches) of water-column height.

(b) The pressure in the facepiece shall not fall below atmospheric at inhalation airflows less than 115 liters (4 cubic feet) per minute.

(c) The exhalation resistance to a flow of air at a rate of 85 liters (3 cubic feet) per minute shall not exceed the static pressure in the facepiece by more than 51 mm. (2 inches) of water-column height.

§ 84.158 Exhalation valve leakage test.

(a) Dry exhalation valves and valve seats will be subjected to a suction of 25 mm. water-column height while in a normal operating position.

(b) Leakage between the valve and valve seat shall not exceed 30 milliliters per minute.

§ 84.159 Man tests for gases and vapors; supplied-air respirators; general performance requirements.

(a) Wearers will enter a chamber containing a gas or vapor as prescribed in §§ 84.160, 84.161, 84.162, and 84.163.

(b) Each wearer will spend 10 minutes in work to provide observations on freedom of the device from leakage. The freedom and comfort allowed the wearer will also be considered.

(c) Time during the test period will be divided as follows:

(1) *Five minutes.* Walking, turning head, dipping chin; and

(2) *Five minutes.* Pumping air with a tire pump into a 28-liter (1 cubic foot) container, or equivalent work.

(d) No odor of the test gas or vapor shall be detected by the wearer in the air breathed during any such test, and the wearer shall not be subjected to any undue discomfort or encumbrance because of the fit, air delivery, or other features of the respirator during the testing period.

§ 84.160 Man test for gases and vapors; Type A and Type AE respirators; test requirements.

(a) The completely assembled respirator will be worn in a chamber containing 0.1 ±0.025 percent isoamyl acetate vapor, and the blower, the intake of the hose, and not more than 25 percent of the hose length will be located in isoamyl acetate-free air.

(b) The man in the isoamyl acetate atmosphere will draw his inspired air through the hose, connections, and all parts of the air device by means of his lungs alone (blower not operating).

(c) The 10-minute work test will be repeated with the blower in operation at any practical speed up to 50 revolutions of the crank per minute.

§ 84.161 Man test for gases and vapors; Type B and Type BE respirators; test requirements.

(a) The completely assembled respirator will be worn in a chamber containing 0.1 ±0.025 percent isoamyl acetate vapor, and the intake of the hose, and not more than 25 percent of the hose length will be located in isoamyl acetate-free air.

(b) The man in the isoamyl acetate atmosphere will draw his inspired air through the hose and connections by means of his lungs alone.

§ 84.162 Man test for gases and vapors; Type C respirators, continuous-flow class and Type CE supplied-air respirators; test requirements.

(a) The completely assembled respirator will be worn in a chamber containing 0.1 ±0.025 percent isoamyl acetate vapor, the intake of the hose will be connected to a suitable source of respirable air, and not more than 25 percent of the hose length will be located in isoamyl acetate-free air.

(b) The minimum flow of air required to maintain a positive pressure in the respiratory-inlet covering throughout the entire breathing cycle will be supplied to the wearer, provided however, that airflow shall not be less than 115 liters per minute for tight-fitting and not less than 170 liters per minute for loose-fitting respiratory inlet-coverings.

(c) The test will be repeated with the maximum rate of flow attainable within specified operating pressures.

§ 84.163 Man test for gases and vapors; Type C supplied-air respirators, demand and pressure-demand classes; test requirements.

(a) The completely assembled respirator will be worn in a chamber containing 0.1 ±0.025 percent isoamyl acetate vapor, the intake of the hose will be connected to a suitable source of respirable air, and not more than 25 percent of the hose length will be located in isoamyl acetate-free air.

(b) The test will be conducted at the minimum pressure with the maximum hose length and will be repeated at the maximum pressure with the minimum hose length.

TABLE TO SUBPART J OF PART 84

TABLE 8—AIR-SUPPLY-LINE REQUIREMENTS AND TESTS

[42 CFR part 84, subpart J]

Specific requirements	Requirements for the air-supply lines of the indicated type of supplied-air respirators		
	Type A	Type B	Type C
Length of hose	Maximum of 91 m. (300 feet), in multiples of 7.6 m. (25 feet).	Maximum of 23 m. (75 feet) in multiples of 7.6 m. (25 feet).	Maximum of 91 m. (300 feet) in multiples of 7.6 m. (25 feet). It will be permissible for the applicant to supply hose of the approved type of shorter length than 7.6 m. (25 feet) provided it meets the requirements of the part.
Air flow	None	None	The air-supply hose with air regulating valve or orifice shall permit a flow of not less than 115 liters (4 cubic feet) per minute to tight-fitting and 170 liters (6 cubic feet) per minute to loose-fitting respiratory-inlet coverings through the maximum length of hose for which approval is granted and at the minimum specified air-supply pressure. The maximum flow shall not exceed 425 liters (15 cubic feet) per minute at the maximum specified air-supply pressure with the minimum length of hose for which approval is granted.
Air flow	.....do	.....do	The air-supply hose, detachable coupling, and demand valve of the demand class or pressure-demand valve of the pressure-demand class for Type C supplied-air respirators, demand and pressure-demand classes, shall be capable of delivering respirable air at a rate of not less than 115 liters (4 cubic feet) per minute to the respiratory-inlet covering at an inhalation resistance not exceeding 50 millimeters (2 inches) of water-column height measured in the respiratory-inlet covering with any combination of air-supply pressure and length of hose within the applicant's specified range of pressure and hose length. The airflow rate and resistance to inhalation shall be measured while the demand or pressure-demand valve is actuated 20 times per minute by a source of intermittent suction. The maximum rate of flow to the respiratory-inlet covering shall not exceed 425 liters (15 cubic feet) per minute under the specified operating conditions.

TABLE 8—AIR-SUPPLY-LINE REQUIREMENTS AND TESTS—Continued

[42 CFR part 84, subpart J]

Specific requirements	Requirements for the air-supply lines of the indicated type of supplied-air respirators		
	Type A	Type B	Type C
Air-regulating valve	.....do	.....do	If an air-regulating valve is provided, it shall be so designed that it will remain at a specific adjustment, which will not be affected by the ordinary movement of the wearer. The valve must be so constructed that the air supply with the maximum length of hose and at the minimum specified air-supply pressure will not be less than 115 liters (4 cubic feet) of air per minute to tight-fitting and 170 liters (6 cubic feet) of air per minute of loose-fitting respiratory inlet coverings for any adjustment of the valve. If a demand or pressure-demand valve replaces the air-regulating valve, it shall be connected to the air-supply at the maximum air pressure for which approval is sought by means of the minimum length of air-supply hose for which approval is sought. The outlet of the demand or pressure-demand valve shall be connected to a source of intermittent suction so that the demand or pressure-demand valve is actuated approximately 20 times per minute for a total of 100,000 inhalations. To expedite this test, the rate of actuation may be increased if mutually agreeable to the applicant and NIOSH. During this test the valve shall function without failure and without excessive wear of the moving parts. The demand or pressure-demand valve shall not be damaged in any way when subjected at the outlet to a pressure or suction of 25 cm. (10 inches) of water gage for 2 minutes.
Noncollapsibility	The hose shall not collapse or exhibit permanent deformation when a force of 90 kg. (200 pounds) is applied for 5 minutes between 2 planes 7.6 cm. (3 inches) wide on opposite sides of the hose.	Same as Type A	None.
Nonkinkability	None	None	A 7.6 m. (25 foot) section of the hose will be placed on a horizontal-plane surface and shaped into a one-loop coil with one end of the hose connected to an airflow meter and the other end of the hose supplied with air at the minimum specified supply pressure. The connection shall be in the plane of the loop. The other end of the hose will be pulled tangentially to the loop and in the plane of the loop until the hose straightens. To meet the requirements of this test the loop shall maintain a uniform near-circular shape and ultimately unfold as a spiral, without any localized deformation that decreases the flow of air to less than 90 percent of the flow when the hose is tested while remaining in a straight line.
Strength of hose and couplings.	Hose and couplings shall not separate or fail when tested with a pull of 113 kg. (250 pounds) for 5 minutes.	Same as Type A	Hose and couplings shall not exhibit any separation or failure when tested with a pull of 45 kg. (100 pounds) for 5 minutes and when tested by subjecting them to an internal air pressure of 2 times the maximum respirator-supply pressure that is specified by the applicant or at 173 kN/m. 2 (25 pounds per square inch) gage, whichever is higher.

TABLE 8—AIR-SUPPLY-LINE REQUIREMENTS AND TESTS—Continued

[42 CFR part 84, subpart J]

Specific requirements	Requirements for the air-supply lines of the indicated type of supplied-air respirators		
	Type A	Type B	Type C
Tightness	No air leakage shall occur when the hose and couplings are joined and the joint(s) are immersed in water and subjected to an internal air pressure of 35 kN/m. 2 (5 pounds per square inch) gage.	None	Leakage of air exceeding 50 cc. per minute at each coupling shall not be permitted when the hose and couplings are joined and are immersed in water, with air flowing through the respirator under a pressure of 173 kN/m. 2 (25 pounds per square inch) gage applied to the inlet end of the air-supply hose, or at twice the maximum respirator-supply pressure that is specified by the applicant, whichever is higher.
Permeation of hose by gasoline.	The permeation of the hose by gasoline will be tested by immersing 7.6 m. (25 feet) of hose and one coupling in gasoline, with air flowing through the hose at the rate of 8 liters per minute for 6 hours. The air from the hose shall not contain more than 0.01 percent by volume of gasoline vapor at the end of the test.	Same as for Type A	Same as for Type A, except the test period shall be 1 hour.
Detachable coupling	None	None	A hand-operated detachable coupling by which the wearer can readily attach or detach the connecting hose shall be provided at a convenient location. This coupling shall be durable, remain connected under all conditions of normal respirator use, and meet the prescribed tests for strength and tightness of hose and couplings.

Subpart K—Non-Powered Air-Purifying Particulate Respirators

§ 84.170 Non-powered air-purifying particulate respirators; description.

(a) Non-powered air-purifying particulate respirators utilize the wearer's negative inhalation pressure to draw the ambient air through the air-purifying filter elements (filters) to remove particulates from the ambient air. They are designed for use as respiratory protection against atmospheres with particulate contaminants (e.g., dusts, fumes, mists) that are not immediately dangerous to life or health and that contain adequate oxygen to support life.

(b) Non-powered air-purifying particulate respirators are classified into three series, N-, R-, and P-series. The N-series filters are restricted to use in those workplaces free of oil aerosols. The R- and P-series filters are intended for removal of any particulate that includes oil-based liquid particulates.

(c) Non-powered air-purifying particulate respirators are classified according to the efficiency level of the filter(s) as tested according to the requirements of this part.

(1) N100, R100, and P100 filters shall demonstrate a minimum efficiency level of 99.97 percent.

(2) N99, R99, and P99 filters shall demonstrate a minimum efficiency level of 99 percent.

(3) N95, R95, and P95 filters shall demonstrate a minimum efficiency level of 95 percent.

§ 84.171 Non-powered air-purifying particulate respirators; required components.

(a) Each non-powered air-purifying particulate respirator described in § 84.170 shall, where its design requires, contain the following component parts:

(1) Facepiece, mouthpiece with noseclip, hood, or helmet;
(2) Filter unit;
(3) Harness;
(4) Attached blower; and
(5) Breathing tube.
(b) The components of each non-powered air-purifying particulate respirator shall meet the minimum construction requirements set forth in subpart G of this part.

§ 84.172 Breathing tubes; minimum requirements.

Flexible breathing tubes used in conjunction with respirators shall be designed and constructed to prevent:
(a) Restriction of free head movement;
(b) Disturbance of the fit of facepieces, mouthpieces, hoods, or helmets;
(c) Interference with the wearer's activities; and
(d) Shutoff of airflow due to kinking, or from chin or arm pressure.

§ 84.173 Harnesses; installation and construction; minimum requirements.

(a) Each respirator shall, where necessary, be equipped with a suitable harness designed and constructed to hold the components of the respirator in position against the wearer's body.
(b) Harnesses shall be designed and constructed to permit easy removal and replacement of respirator parts, and, where applicable, provide for holding a full facepiece in the ready position when not in use.

§ 84.174 Respirator containers; minimum requirements.

(a) Except as provided in paragraph (b) of this section each respirator shall be equipped with a substantial, durable container bearing markings which show the applicant's name, the type of respirator it contains, and all appropriate approval labels.
(b) Containers for single-use respirators may provide for storage of more than one respirator, however, such containers shall be designed and constructed to prevent contamination of respirators which are not removed, and to prevent damage to respirators during transit.

§ 84.175 Half-mask facepieces, full facepieces, hoods, helmets, and mouthpieces; fit; minimum requirements.

(a) Half-mask facepieces and full facepieces shall be designed and constructed to fit persons with various facial shapes and sizes either:
(1) By providing more than one facepiece size; or
(2) By providing one facepiece size which will fit varying facial shapes and sizes.
(b) Full facepieces shall provide for optional use of corrective spectacles or lenses, which shall not reduce the respiratory protective qualities of the respirator.
(c) Hoods and helmets shall be designed and constructed to fit persons with various head sizes, provide for the optional use of corrective spectacles or lenses, and insure against any restriction of movement by the wearer.
(d) Mouthpieces shall be equipped with noseclips which are securely attached to the mouthpiece or respirator and provide an airtight seal.
(e) Facepieces, hoods, and helmets shall be designed to prevent eyepiece fogging.
(f) Half-mask facepieces shall not interfere with the fit of common industrial safety corrective spectacles.

§ 84.176 Facepieces, hoods, and helmets; eyepieces; minimum requirements.

Facepieces, hoods, and helmets shall be designed and constructed to provide adequate vision which is not distorted by the eyepieces.

§ 84.177 Inhalation and exhalation valves; minimum requirements.

(a) Inhalation and exhalation valves shall be protected against distortion.
(b) Inhalation valves shall be designed and constructed and provided where necessary to prevent excessive exhaled air from adversely affecting filters, except where filters are specifically designed to resist moisture.
(c) Exhalation valves shall be:
(1) Provided where necessary;
(2) Protected against damage and external influence; and

(3) Designed and constructed to prevent inward leakage of contaminated air.

§ 84.178 Head harnesses; minimum requirements.

(a) All facepieces shall be equipped with head harnesses designed and constructed to provide adequate tension during use and an even distribution of pressure over the entire area in contact with the face.

(b) Facepiece head harnesses, except those employed on single-use respirators, shall be adjustable and replaceable.

(c) Mouthpieces shall be equipped, where applicable, with adjustable and replaceable harnesses, designed and constructed to hold the mouthpiece in place.

§ 84.179 Non-powered air-purifying particulate respirators; filter identification.

(a) The respirator manufacturer, as part of the application for certification, shall specify the filter series and the filter efficiency level (i.e., ''N95'', ''R95, ''P95'', ''N99, ''R99'', ''P99'', ''N100'', ''R100'', or ''P100'') for which certification is being sought.

(b) Filters shall be prominently labeled as follows:

(1) N100 filters shall be labeled ''N100 Particulate Filter (99.97% filter efficiency level)'' and shall be a color other than magenta.

(2) R100 filters shall be labeled ''R100 Particulate Filter (99.97% filter efficiency level)'' and shall be a color other than magenta.

(3) P100 filters shall be labeled ''P100 Particulate Filter (99.97% filter efficiency level)'' and shall be color coded magenta.

(4) N99 filters shall be labeled ''N99 Particulate Filter (99% filter efficiency level)'' and shall be a color other than magenta.

(5) R99 filters shall be labeled ''R99 Particulate Filter (99% filter efficiency level)'' and shall be a color other than magenta.

(6) P99 filters shall be labeled ''P99 Particulate Filter (99% filter efficiency level)'' and shall be a color other than magenta.

(7) N95 filters shall be labeled as ''N95 Particulate Filter (95% filter efficiency level)'' and shall be a color other than magenta.

(8) R95 filters shall be labeled as ''R95 Particulate Filter (95% filter efficiency level)'' and shall be a color other than magenta.

(9) P95 filters shall be labeled as ''P95 Particulate Filter (95% filter efficiency level)'' and shall be a color other than magenta.

§ 84.180 Airflow resistance tests.

(a) Resistance to airflow will be measured in the facepiece, mouthpiece, hood, or helmet of a particulate respirator (complete respirator) mounted on a test fixture with air flowing at continuous rate of 85 ±2 liters per minute, before each test conducted in accordance with § 84.182.

(b) The resistances for particulate respirators upon initial inhalation shall not exceed 35 mm water column height pressure and upon initial exhalation shall not exceed 25 mm water column height pressure.

§ 84.181 Non-powered air-purifying particulate filter efficiency level determination.

(a) Twenty filters of each non-powered air-purifying particulate respirator model shall be tested for filter efficiency against:

(1) A solid sodium chloride particulate aerosol as per this section, if N-series certification is requested by the applicant.

(2) A dioctyl phthalate or equivalent liquid particulate aerosol as per this section, if R-series or P-series certification is requested by the applicant.

(b) Filters including holders and gaskets; when separable, shall be tested for filter efficiency level, as mounted on a test fixture in the manner as used on the respirator.

(c) Prior to filter efficiency testing of 20 N-series filters, the 20 to be tested shall be taken out of their packaging and placed in an environment of 85 ±5 percent relative humidity at 38 ±2.5 °C for 25 ±1 hours. Following the pre-conditioning, filters shall be sealed in a gas-tight container and tested within 10 hours.

(d) When the filters do not have separable holders and gaskets, the exhalation valves shall be blocked so as to ensure that leakage, if present, is not included in the filter efficiency level evaluation.

(e) For non-powered air-purifying particulate respirators with a single filter, filters shall be tested at a continuous airflow rate of 85 ±4 liters per minute. Where filters are to be used in pairs, the test-aerosol airflow rate shall be 42.5 ±2 liters per minute through each filter.

(f) *Filter efficiency test aerosols.* (1) When testing N-series filters, a sodium chloride or equivalent solid aerosol at 25 ±5 °C and relative humidity of 30 ±10 percent that has been neutralized to the Boltzmann equilibrium state shall be used. Each filter shall be challenged with a concentration not exceeding 200 mg/m^3.

(2) When testing R-series and P-series filters, a neat cold-nebulized dioctyl phthalate (DOP) or equivalent aerosol at 25 ±5 °C that has been neutralized to the Boltzmann equilibrium state shall be used. Each filter shall be challenged with a concentration not exceeding 200 mg/m^3.

(3) The test shall continue until minimum efficiency is achieved or until an aerosol mass of at least 200 ±5 mg has contacted the filter. For P-series filters, if the filter efficiency is decreasing when the 200 ±5 mg challenge point is reached, the test shall be continued until there is no further decrease in efficiency.

(g) The sodium chloride test aerosol shall have a particle size distribution with count median diameter of 0.075 ±0.020 micrometer and a standard geometric deviation not exceeding 1.86 at the specified test conditions as determined with a scanning mobility particle sizer or equivalent. The DOP aerosol shall have a particle size distribution with count median diameter of 0.185 ±0.020 micrometer and a standard geometric deviation not exceeding 1.60 at the specified test conditions as determined with a scanning mobility particle sizer or equivalent.

(h) The efficiency of the filter shall be monitored and recorded throughout the test period by a suitable forward-light-scattering photometer or equivalent instrumentation.

(i) The minimum efficiency for each of the 20 filters shall be determined and recorded and be equal to or greater than the filter efficiency criterion listed for each level as follows:

P100, R100 and N100: Efficiency ≥99.97%
P99, R99 and N99: Efficiency ≥99%
P95, R95 and N95: Efficiency ≥95%

§ 84.182 Exhalation valve leakage test; minimum requirements.

(a) Dry exhalation valves and valve seats will be subjected to a suction of 25 mm. water-column height while in a normal operating position.

(b) Leakage between the valve and valve seat shall not exceed 30 milliliters per minute.

Subpart L—Chemical Cartridge Respirators

§ 84.190 Chemical cartridge respirators: description.

(a) Chemical cartridge respirators including all completely assembled respirators which are designed for use as respiratory protection during entry into or escape from atmospheres not immediately dangerous to life and health, are described according to the specific gases or vapors against which they are designed to provide respiratory protection, as follows:

Type of chemical cartridge respirator [1]	Maximum use concentration, parts per million
Ammonia	300
Chlorine	10
Hydrogen chloride	50
Methyl amine	100
Organic vapor	[2] 1,000
Sulfur dioxide	50
Vinyl chloride	10

[1] Not for use against gases or vapors with poor warning properties (except where MSHA or Occupational Safety and Health Administration standards may permit such use for a specific gas or vapor) or those which generate high heats of reaction with sorbent material in the cartridge.

[2] Maximum use concentrations are lower for organic vapors which produce atmospheres immediately hazardous to life or health at concentrations equal to or lower than this concentration.

(b) Chemical cartridge respirators for respiratory protection against gases or vapors, which are not specifically listed with their maximum use concentration, may be approved if the applicant

submits a request for such approval, in writing, to the Institute. The Institute shall consider each such application and accept or reject the application after a review of the effects on the wearer's health and safety and in the light of any field experience in use of chemical cartridge respirators as protection against such hazards.

§ 84.191 Chemical cartridge respirators; required components.

(a) Each chemical cartridge respirator described in § 84.190 shall, where its design requires, contain the following component parts:

(1) Facepiece, mouthpiece, and noseclip, hood, or helmet;

(2) Cartridge;

(3) Cartridge with filter;

(4) Harness;

(5) Breathing tube; and

(6) Attached blower.

(b) The components of each chemical cartridge respirator shall meet the minimum construction requirements set forth in subpart G of this part.

§ 84.192 Cartridges in parallel; resistance requirements.

Where two or more cartridges are used in parallel, their resistance to airflow shall be essentially equal.

§ 84.193 Cartridges; color and markings; requirements.

The color and markings of all cartridges or labels shall conform with the requirements of the American National Standards Institute, American National Standard for Identification of Air-Purifying Respirator Canisters and Cartridges, ANSI K13.1–1973. ANSI K13.1 is incorporated by reference and has been approved by the Director of the Federal Register in accordance with 5 U.S.C. 552(a) and 1 CFR part 51. Copies may be obtained from American National Standards Institute, Inc., 1430 Broadway, New York, NY 10018. Copies may be inspected at the NIOSH, Certification and Quality Assurance Branch, 1095 Willowdale Road, Morgantown, WV 26505–2888, or at the National Archives and Records Administration (NARA). For information on the availability of this material at NARA, call 202–741–6030, or go to: *http://www.archives.gov/federal_register/code_of_federal_regulations/ibr_locations.html.*

§ 84.194 Filters used with chemical cartridges; location; replacement.

(a) Particulate matter filters used in conjunction with a chemical cartridge shall be located on the inlet side of the cartridge.

(b) Filters shall be incorporated in or firmly attached to the cartridge and each filter assembly shall, where applicable, be designed to permit its easy removal from and replacement on the cartridge.

§ 84.195 Breathing tubes; minimum requirements.

Flexible breathing tubes used in conjunction with respirators shall be designed and constructed to prevent:

(a) Restriction of free head movement;

(b) Disturbance of the fit of facepieces, mouthpieces, hoods, or helmets;

(c) Interference with the wearer's activities; and

(d) Shutoff of airflow due to kinking, or from chin or arm pressure.

§ 84.196 Harnesses; installation and construction; minimum requirements.

(a) Each respirator shall, where necessary, be equipped with a suitable harness designed and constructed to hold the components of the respirator in position against the wearer's body.

(b) Harnesses shall be designed and constructed to permit easy removal and replacement of respirator parts and, where applicable, provide for holding a full facepiece in the ready position when not in use.

§ 84.197 Respirator containers; minimum requirements.

Respirators shall be equipped with a substantial, durable container bearing markings which show the applicant's name, the type and commercial designation of the respirator it contains and all appropriate approval labels.

§ 84.198 Half-mask facepieces, full facepieces, mouthpieces, hoods, and helmets; fit; minimum requirements.

(a) Half-mask facepieces and full facepieces shall be designed and constructed to fit persons with various facial shapes and sizes either:

(1) By providing more than one facepiece size; or

(2) By providing one facepiece size which will fit varying facial shapes and sizes.

(b) Hoods and helmets shall be designed and constructed to fit persons with various head sizes, provide for the optional use of corrective spectacles or lenses, and insure against any restriction of movement by the wearer.

(c) Mouthpieces shall be equipped with noseclips which are securely attached to the mouthpiece or respirator and provide an airtight fit.

(d) Full facepieces shall provide for optional use of corrective spectacles or lenses which shall not reduce the respiratory protective qualities of the respirator.

(e) Facepieces, hoods, and helmets shall be designed to prevent eyepiece fogging.

§ 84.199 Facepieces, hoods, and helmets; eyepieces; minimum requirements.

Facepieces, hoods, and helmets shall be designed and constructed to provide adequate vision which is not distorted by the eyepieces.

§ 84.200 Inhalation and exhalation valves; minimum requirements.

(a) Inhalation and exhalation valves shall be provided where necessary and protected against distortion.

(b) Inhalation valves shall be designed and constructed to prevent excessive exhaled air from entering cartridges or adversely affecting canisters.

(c) Exhalation valves shall be—

(1) Protected against damage and external influence; and

(2) Designed and constructed to prevent inward leakage of contaminated air.

§ 84.201 Head harnesses; minimum requirements.

(a)(1) Facepieces for chemical cartridge respirators other than single-use vinyl chloride shall be equipped with adjustable and replaceable head harnesses designed and constructed to provide adequate tension during use and an even distribution of pressure over the entire area in contact with the face.

(2) Facepieces for single-use vinyl chloride respirators shall be equipped with adjustable head harnesses designed and constructed to provide adequate tension during use and an even distribution of pressure over the entire area in contact with the face.

(b) Mouthpieces shall be equipped where applicable, with an adjustable and replaceable harness designed and constructed to hold the mouthpiece in place.

§ 84.202 Air velocity and noise levels; hoods and helmets; minimum requirements.

Noise levels generated by the respirator will be measured inside the hood or helmet at maximum airflow obtainable and shall not exceed 80 dBA.

§ 84.203 Breathing resistance test; minimum requirements.

(a) Resistance to airflow will be measured in the facepiece, mouthpiece, hood, or helmet of a chemical cartridge respirator mounted on a test fixture with air flowing at a continuous rate of 85 liters per minute, both before and after each test conducted in accordance with §§ 84.206 through 84.207.

(b) The maximum allowable resistance requirements for chemical cartridge respirators are as follows:

MAXIMUM RESISTANCE

[Millimeter water column height]

Type of chemical-cartridge respirator	Inhalation		Exhalation
	Initial	Final [1]	
Other than single-use vinyl chloride respirators:			
For gases, vapors, or gases and vapors	40	45	20

MAXIMUM RESISTANCE—Continued

[Millimeter water column height]

Type of chemical-cartridge respirator	Inhalation		Exhalation
	Initial	Final [1]	
For gases, vapors, or gases and vapors, and particulates	50	70	20
Single-use respirator with valves:			
For vinyl chloride	20	25	20
For vinyl chloride and particulates	30	45	2
Single-use respirator without valves:			
For vinyl chloride	15	20	([2])
For vinyl chloride and particulates	25	40	([2])

[1] Measured at end of service life specified in Table 11 of this subpart.
[2] Same as inhalation.

§ 84.204 Exhalation valve leakage test; minimum requirements.

(a) Dry exhalation valves and valve seats will be subjected to a suction of 25 mm. water-column height while in a normal operating position.

(b) Leakage between the valve and valve seat shall not exceed 30 milliliters per minute.

§ 84.205 Facepiece test; minimum requirements.

(a) The complete chemical cartridge respirator will be fitted to the faces of persons having varying facial shapes and sizes.

(b) Where the applicant specifies a facepiece size or sizes for the respirator together with the approximate measurement of faces they are designed to fit, the Institute will provide test subjects to suit such facial measurements.

(c) Any chemical cartridge respirator part which must be removed to perform the facepiece or mouthpiece fit test shall be replaceable without special tools and without disturbing facepiece or mouthpiece fit.

(d) The facepiece or mouthpiece fit test using the positive or negative pressure recommended by the applicant and described in his instructions will be used before each test.

(e)(1) Each wearer will enter a chamber containing 100 p.p.m. isoamyl acetate vapor for half-mask facepieces, and 1,000 p.p.m. for full facepieces, mouthpieces, hoods, and helmets.

(2) The facepiece or mouthpiece may be adjusted, if necessary, in the test chamber before starting the test.

(3) Each wearer will remain in the chamber for 8 minutes while performing the following activities:

(i) Two minutes, nodding and turning head;

(ii) Two minutes, calisthenic arm movements;

(iii) Two minutes, running in place; and

(iv) Two minutes, pumping with a tire pump into a 28-liter (1 cubic-foot) container.

(4) Each wearer shall not detect the odor of isoamyl-acetate vapor during the test.

§ 84.206 Particulate tests; respirators with filters; minimum requirements; general.

(a) Three respirators with cartridges containing, or having attached to them, filters for protection against particulates will be tested in accordance with the provisions of § 84.207.

(b) In addition to the test requirements set forth in paragraph (a) of this section, three such respirators will be tested, as appropriate, in accordance with the provisions of §§ 84.179 through 84.183; however, the maximum allowable resistance of complete particulate, and gas, vapor, or gas and vapor chemical cartridge respirators shall not exceed the maximum allowable limits set forth in § 84.203.

§ 84.207 Bench tests; gas and vapor tests; minimum requirements; general.

(a) Bench tests will be made on an apparatus that allows the test atmosphere at 50 ±5 percent relative humidity and room temperature, approximately 25 °C, to enter the cartridges continuously at predetermined concentrations and rates of flow, and that

has means for determining the test life of the cartridges.

(b) Where two cartridges are used in parallel on a chemical cartridge respirator, the bench test will be performed with the cartridges arranged in parallel, and the test requirements will apply to the combination rather than to the individual cartridges.

(c) Three cartridges or pairs of cartridges will be removed from containers and tested as received from the applicant.

(d) Two air purifying cartridges or pairs of cartridges will be equilibrated at room temperature by passing 25 percent relative humidity air through them at the flow rate of 25 liters per minute (l.p.m.) for 6 hours.

(e) Two air purifying cartridges or pairs of cartridges will be equilibrated by passing 85 percent relative humidity air through them at the flow rate of 25 l.p.m.

(f) All cartridges will be resealed, kept in an upright position, at room temperatures, and tested within 18 hours.

(g) Cartridges will be tested and shall meet the minimum requirements set forth in Table 11 of this subpart.

TABLES TO SUBPART L OF PART 84

TABLES 9–10 [RESERVED]

TABLE 11—CARTRIDGE BENCH TESTS AND REQUIREMENTS

[42 CFR part 84, subpart L]

Cartridge	Test condition	Test atmosphere		Flowrate (l.p.m.)	Number of tests	Penetration [1] (p.p.m.)	Minimum life [2] (min.)
		Gas or vapor	Concentration (p.p.m.)				
Ammonia	As received	NH_3	1000	64	3	50	50
Ammonia	Equilibrated	NH_3	1000	32	4	50	50
Chlorine	As received	Cl_2	500	64	3	5	35
Chlorine	Equilibrated	Cl_2	500	32	4	5	35
Hydrogen chloride.	As received	HCl	500	64	3	5	50
Hydrogen chloride.	Equilibrated	HCl	500	32	4	5	50
Methylamine	As received	CH_3 NH_2	1000	64	3	10	25
Methylamine	Equilibrated	CH_3 NH_2	1000	32	4	10	25
Organic vapors	As received	CCl_4	1000	64	3	5	50
Organic vapors	Equilibrated	CCl_4	1000	32	4	5	50
Sulfur dioxide	As received	SO_2	500	64	3	5	30
Sulfur dioxide	Equilibrated	SO_2	500	32	4	5	30

[1] Minimum life will be determined at the indicated penetration.

[2] Where a respirator is designed for respiratory protection against more than one type of gas or vapor, as for use in ammonia and in chlorine, the minimum life shall be one-half that shown for each type of gas or vapor. Where a respirator is designed for respiratory protection against more than one gas of a type, as for use in chlorine and sulfur dioxide, the stated minimal life shall apply.

Subpart M [Reserved]

Subpart N—Special Use Respirators

§ 84.250 Vinyl chloride respirators; description.

Vinyl chloride respirators, including all completely assembled respirators which are designed for use as respiratory protection during entry into and escape from vinyl chloride atmospheres containing adequate oxygen to support life, are described according to their construction as follows:

(a) Front-mounted or back-mounted gas masks;

(b) Chin-style gas masks;

(c) Chemical-cartridge respirators;

(d) Powered air-purifying respirators; and

(e) Other devices, including combination respirators.

§ 84.251 Required components.

(a) Each vinyl chloride respirator described in § 84.250 shall, where its design requires, contain the following component parts:

(1) Facepiece;

(2) Canister with end-of-service-life indicator;

(3) Cartridge with end-of-service-life indicator;

(4) Harness;

(5) Attached blower; and

(6) Breathing tube.

(b) The components of each vinyl chloride respirator shall meet the minimum construction requirements set forth in Subpart G of this part.

§ 84.252 Gas masks; requirements and tests.

(a) Except for the tests prescribed in § 84.126, the minimum requirements and performance tests for gas masks, prescribed in Subpart I of this part, are applicable to vinyl chloride gas masks.

(b) The following bench tests are applicable to canisters designed for use with gas masks for entry into and escape from vinyl chloride atmospheres containing adequate oxygen to support life:

(1) Four canisters will be equilibrated at 25 ±5 °C by passing 85 ±5 percent relative humidity air through them at 64 liters per minute for six hours.

(2) The equilibrated canisters will be resealed, kept in an upright position at room temperature, and tested according to paragraph (b)(3) of this section within 18 hours.

(3) The canisters equilibrated and stored as described in paragraphs (b) (1) and (2) of this section will be tested on an apparatus that allows the test atmosphere at 85 ±5 percent relative humidity and 25 ±5 °C to enter the canister continuously at a concentration of 25 ppm vinyl chloride monomer at a total flow rate of 64 liters per minute.

(4) The maximum allowable penetration after six hours of testing according to paragraph (b)(3) of this section shall not exceed 1 ppm vinyl chloride.

(c) Where canisters are submitted for testing and approval with a service life of more than four hours, the period of time for testing for vinyl chloride penetration will be performed at 150% of the service life specified in the manufacturer's application. (Example: If a manufacturer requests approval of a respirator for six hours use against exposure to vinyl chloride, the maximum allowable penetration after nine hours of testing shall not exceed 1 ppm vinyl chloride.)

§ 84.253 Chemical-cartridge respirators; requirements and tests.

(a) Except for the tests prescribed in §§ 84.206 and 84.207, the minimum requirements and performance tests for chemical-cartridge respirators prescribed in Subpart L of this part are applicable to replaceable-cartridge and single-use vinyl chloride chemical-cartridge respirators.

(b) The following bench tests are applicable to cartridges designed for use with chemical-cartridge respirators for entry into and escape from vinyl chloride atmospheres containing adequate oxygen to support life:

(1) Where two cartridges are used in parallel on a chemical-cartridge respirator, the bench test requirements will apply to the combination rather than the individual cartridges.

(2) Four cartridges or pairs of cartridges will be equilibrated at 25 ±5 °C by passing 85 ±5 percent relative humidity air through them at 25 liters per minute for six hours.

(3) The equilibrated cartridges will be resealed, kept in an upright position, at room temperature, and tested according to paragraphs (b)(4) and (b)(5) of this section for other than single-use respirators or according to paragraphs (b)(6) and (b)(7) of this section for single-use respirators within 18 hours.

(4) The cartridges or pairs of cartridges for other than single-use respirators, equilibrated and stored as described in paragraphs (b)(1), (b)(2), and (b)(3) of this section, will be tested on an apparatus that allows the test atmosphere at 85 ±5 percent relative humidity and 25 ±5 °C, to enter the cartridges or pairs of cartridges continuously at a concentration of 10 ppm vinyl chloride monomer at a total flowrate of 64 liters per minute.

(5) The maximum allowable penetration after 90 minutes testing of cartridges or pairs of cartridges for other than single-use respirators, according

to paragraph (b)(4) of this section shall not exceed 1 ppm vinyl chloride.

(6) The single-use respirators, equilibrated and stored as described in paragraphs (b)(2) and (b)(3) of this section, will be tested on an apparatus that allows a test atmosphere at 85 ±5 percent relative humidity and 25 ±5 °C to be cycled through the respirator by a breathing machine at a concentration of 10 ppm vinyl chloride monomer at the rate of 24 respirations per minute at a minute volume of 40 ±0.6 liters. Air exhaled through the respirator will be 35 ±2 °C with 94 ±3 percent relative humidity.

(7) The maximum allowable penetration after 144 minutes testing of respirators, according to paragraph (b)(6) of this section, shall not exceed 1 ppm vinyl chloride.

§ 84.254 Powered air-purifying respirators; requirements and tests.

(a) Except for the tests prescribed in § 84.207, the minimum requirements and performance tests for powered air-purifying respirators prescribed in subpart L of this part are applicable to vinyl chloride powered air-purifying respirators.

(b) The following bench tests are applicable to cartridges designed for use with powered air-purifying respirators for entry into and escape from vinyl chloride atmospheres containing adequate oxygen to support life:

(1) Four cartridges will be equilibrated at 25 ± °C by passing 85 ±5 percent relative humidity air through them at 115 liters per minute for tight-fitting facepieces and 170 liters per minute for loose-fitting hoods and helmets, for six hours.

(2) The equilibrated cartridges will be resealed, kept in an upright position at room temperature and tested according to paragraph (b)(3) of this section within 18 hours.

(3) The cartridges equilibrated and stored as described in paragraphs (b) (1) and (2) of this section will be tested on an apparatus that allows the test atmosphere at 85 ±5 percent relative humidity and 25 ±5 °C to enter the cartridge continuously at a concentration of 25 ppm vinyl chloride monomer at a total flow rate of 115 liters per minute for tight-fitting facepieces and 170 liters per minute for loose-fitting hoods and helmets.

(4) The maximum allowable penetration after six hours of testing according to paragraph (b)(3) of this section shall not exceed 1 ppm vinyl chloride.

§ 84.255 Requirements for end-of-service-life indicator.

(a) Each canister or cartridge submitted for testing and approval in accordance with §§ 84.252, 84.253, and 84.254 shall be equipped with a canister or cartridge end-of-service-life indicator which shows a satisfactory indicator change or other obvious warning before 1 ppm vinyl chloride penetration occurs. The indicator shall show such change or afford such warning at 80 ±10 percent of the total service life to 1 ppm leakage, as determined by continuing each test described in §§ 84.252(b), 84.253(b), and 84.254(b) until a 1 ppm leakage of vinyl chloride occurs.

(b) The applicant shall provide sufficient pretest data to verify the performance of the end-of-service-life indicator required in paragraph (a) of this section.

§ 84.256 Quality control requirements.

(a) In addition to the construction and performance requirements specified in §§ 84.251, 84.252, 84.253, 84.254, and 84.255, the quality control requirements in paragraphs (b), (c), and (d) of this section apply to approval of gas masks, chemical cartridge respirators, and powered air-purifying respirators for entry into and escape from vinyl chloride atmospheres containing adequate oxygen to support life.

(b) The respirators submitted for approval as described in paragraph (a) of this section shall be accompanied by a complete quality control plan meeting the requirements of subpart E of this part.

(c)(1) The applicant shall specify in the plan that a sufficient number of samples will be drawn from each bulk container of sorbent material and that where activated carbon is used, the following specific tests will be performed:

(i) Apparent density;

(ii) Iodine number;

(iii) Moisture content;

(iv) Carbon tetrachloride number; and

(v) Mesh size.

(2) The tests in paragraph (c)(1) of this section shall be performed in a quantity necessary to assure continued satisfactory conformance of the canisters and cartridges to the requirements of this subpart.

(d) Final performance quality control tests on the complete canisters and cartridges shall be accomplished using the bench tests and procedures prescribed in §§ 84.252, 84.253, 84.254, and 84.255.

§ 84.257 Labeling requirements.

(a) A warning shall be placed on the label of each gas mask, chemical-cartridge respirator, and powered air-purifying respirator, and on the label of each canister and cartridge, alerting the wearer to the need for a fitting test in accordance with the manufacturer's facepiece fitting instructions, providing service life information, providing specific instructions for disposal, and advising that the wearer may communicate to NIOSH any difficulties that may be experienced in the design and performance of any gas mask, chemical-cartridge respirator, or powered air-purifying respirator approved under the requirements of this subpart. The service lives of respirators meeting the test requirements of this subpart shall be specified as follows:

Chemical-cartridge respirator	1 hour.
Gas mask	4 hours.
Powered air-purifying respirator	4 hours.

(b) Where the service life of a respirator is approved for more than four hours, the service life for which the respirator has been approved will be specified.

§ 84.258 Fees.

The following fees shall be charged for the examination, inspection, and testing of complete assemblies and components of respirators described in §§ 84.250 and 84.251:

Complete gas mask	$1,100
Complete chemical-cartridge respirator	1,150
Complete powered air-purifying respirator	1,500
Canister or cartridge only	750

Subparts O–JJ [Reserved]

Subpart KK—Dust, Fume, and Mist; Pesticide; Paint Spray; Powered Air-Purifying High Efficiency Respirators and Combination Gas Masks

§ 84.1100 Scope and effective dates.

The purpose of this subpart KK is to establish procedures and requirements for issuing extensions of approval of particulate respirators certified prior to July 10, 1995 under the provisions of 30 CFR part 11 (See 30 CFR part 11 edition, as revised July 1, 1994.), new approvals and extensions of approval of particulate respirators for applications that are in NIOSH receipt on July 10, 1995, and approval of powered air-purifying respirators.

(a) Air-purifying respirators with particulate filters approved under the provisions of this subpart after July 10, 1995 will have a 30 CFR part 11 approval label.

(b) Only changes or modifications of non-powered air-purifying respirators with particulate filters approved under the provisions of subparts I, K, L, or M of 30 CFR part 11 or paragraph (a) of this section and deemed necessary by NIOSH to ensure the health and safety of the wearer will be approved until July 10, 1998 and will have a 30 CFR part 11 approval label.

(c) Only changes or modifications of powered air-purifying respirators with particulate filters approved under the provisions of subparts I, K, L, or M of 30 CFR part 11 or paragraph (a) of this section and deemed necessary by NIOSH to ensure the health and safety of the wearer will be approved under this subpart until July 10, 1998 and will have a 30 CFR part 11 label.

(d) Approval of powered air-purifying respirators will be issued under this subpart. Particulate filters for powered air-purifying respirators approved under the provisions of this subpart shall be only high-efficiency (HEPA) as described in § 84.1130(a)(4) and will carry a 42 CFR part 84 approval label. In addition, changes or modifications of powered HEPA air-purifying respirators approved under the provisions of this subpart KK will be approved

under this subpart and will have a 42 CFR part 84 approval label.

§ 84.1101 Definitions.

As used in this subpart

(a) *Air Contamination Level* means the standards of contaminant levels prescribed by the Secretary of Labor in accordance with the provisions of the Occupational Safety and Health Act of 1970 (Pub. L. 91–596; 84 Stat. 1590).

(b) *DOP* means a homogenous liquid aerosol, having a particle diameter of 0.3 micrometer, which is generated by vaporization and condensation of dioctyl phthalate.

(c) *Pesticide* means:

(1) Any substance or mixture of substances (including solvents and impurities) intended to prevent, destroy, repel, or mitigate any insect, rodent, nematode, fungus, weed, or other form of plant or animal life or virus; and

(2) Any substance or mixture of substances (including solvents and impurities) intended for use as a plant regulator, defoliant, or desiccant, as defined in the Federal Insecticide, Fungicide, and Rodenticide Act of 1947, as amended (7 U.S.C. 135–135k), excluding fumigants which are applied as gases or vapors or in a solid or liquid form as pellets or poured liquids for subsequent release as gases or vapors.

(d) *Radionuclide* means an atom identified by the constitution of its nucleus (specified by the number of protons Z, number of neutrons N, and energy, or, alternatively, by the atomic number Z, mass number A=(N+Z), and atomic mass) which exists for a measurable time; decays or disintegrates spontaneously, emits radiation, and results in the formation of new nuclides.

(e) *Smoke* means the products of incomplete combustion of organic substances in the form of solid and liquid particles and gaseous products in air, usually of sufficient concentration to perceptibility obscure vision.

§ 84.1102 Examination, inspection and testing of complete respirator assemblies; fees.

The following fees shall be charged by the Institute for the examination, inspection and testing of complete respirator assemblies approved under this subpart:

(a) Gas masks with particulate filter, including pesticide gas masks—

(1) Single hazard—$1,100.

(2) Type N—$4,100.

(b) Dust, fume and mist respirators—

(1) Single particulate hazard having an Air Contamination Level more than 0.05 mg./m.^{3} or 2 million particles per cubic foot—$500.

(2) Combination particulate hazards having an Air Contamination Level more than 0.05 mg./m.^{3} or 2 million particles per cubic foot—$750.

(3) Particulate hazards having an Air Contamination Level less than 0.05 mg./m.^{3} or 2 million particles per cubic foot, radon daughters—$1,250.

(4) All dusts, fumes and mists—$2,000.

(c) Paint spray respirators—$1,600.

(d) Pesticide respirators—$1,600.

(e) Chemical cartridge respirators with particulate filter—$1,150.

§ 84.1103 Approval labels and markings; approval of contents; use.

(a) Full-scale reproductions of approval labels and markings, and a sketch or description of the method of application and position on the harness, container, canister, cartridge, filter, or other component, together with instructions for the use and maintenance of the respirator shall be submitted to MSHA and the Institute for approval.

(b) Approval labels for non-powered and powered air-purifying dust, fume, mist respirators approved prior to July 10, 1995 under the provisions of subpart K of 30 CFR part 11 (See 30 CFR Part 11 edition, revised as of July 1, 1994.) shall bear the emblem of the Mine Safety and Health Administration and the seal of the Department of Health and Human Services, the applicant's name and address, an approval number assigned by the Institute, a statement that the respirator was tested and approved under subpart K of 30 CFR part 11 and, where appropriate, restrictions or limitations placed upon the use of the respirator by the Institute. The approval number assigned by the Institute shall be designated by the prefix TC and a serial number.

(c) Approval labels for powered air-purifying respirators approved under the provisions of this subpart shall

bear the emblem of the National Institute for Occupational Safety and Health and the seal of the Department of Health and Human Services, the applicant's name and address, an approval number assigned by the Institute, a statement stating the respirator was tested under the provisions of this subpart, and, where appropriate, restrictions or limitations placed upon the use of the respirator by the Institute. The approval number assigned by the Institute shall be designated by the prefix TC and a serial number.

(c) The Institute shall, where necessary, notify the applicant when additional labels, markings, or instructions will be required.

(d) Approval labels and markings shall only be used by the applicant to whom they were issued.

(e) Legible reproductions or abbreviated forms of the label approved by the Institute for use on each respirator shall be attached to or printed at the following locations:

Respirator type	Label type	Location
Gas mask with a particulate filter, including pesticide gas mask.	Entire	Mask and container.
Dust, fume, and mist respirators	Entire	Respirator container and filter container.
	Abbreviated	Filters.
Chemical-cartridge respirator with a particulate filter, including paint spray respirator.	Entire	Respirator container, cartridge container, and filter containers (where applicable).
	Abbreviated	Cartridges and filters and filter containers.
Pesticide respirator	Entire	Respirator container, and cartridge and filter containers.
	Abbreviated	Cartridges and filters.

(f) The use of any MSHA and Institute approval label obligates the applicant to whom it is issued to maintain or cause to be maintained the approved quality control sampling schedule and the acceptable quality level for each characteristic tested, and to assure that it is manufactured according to the drawings and specifications upon which the certificate of approval is based.

(g) Each respirator, respirator component, and respirator container shall, as required by the Institute to assure quality control and proper use of the respirator, be labeled distinctly to show the name of the applicant, and the name and letters or numbers by which the respirator or respirator component is designated for trade purposes, and the lot number, serial number, or approximate date of manufacture.

EDITORIAL NOTE: At 60 FR 30388, June 8, 1995, § 84.1103 was added with two paragraph (c) designations.

§ 84.1130 Respirators; description.

(a) Dust, fume, and mist respirators, including all completely assembled respirators designed for use as respiratory protection during entry into and escape from atmospheres which contain adequate oxygen to support life and hazardous particulates, are described as follows:

(1) Air-purifying respirators, either with replaceable or reusable filters, designed as respiratory protection against dusts:

(i) Having an air contamination level not less than 0.05 milligram per cubic meter of air, including but not limited to coal, arsenic, cadmium, chromium, lead, and manganese; or

(ii) Having an air contamination level not less than 2 million particles per cubic foot of air, including but not limited to aluminum, flour, iron ore, and free silica, resulting principally from the disintegration of a solid, e.g., dust clouds produced in mining, quarrying, and tunneling, and in dusts produced during industrial operations, such as grinding, crushing, and the general processing of minerals and other materials.

(2) Air-purifying respirators, with replaceable filters, designed as respiratory protection against fumes of various metals having an air contamination level not less than 0.05 milligram per cubic meter, including but not limited to aluminum, antimony, arsenic, cadmium, chromium, copper,

iron, lead, magnesium, manganese, mercury (except mercury vapor), and zinc, which result from the sublimation or condensation of their respective vapors, or from the chemical reaction between their respective vapors and gases.

(3) Air-purifying respirators, with replaceable filters, designed as respiratory protection against mists of materials having an air contamination level not less than 0.05 milligram per cubic meter or 2 million particles per cubic foot, e.g., mists produced by spray coating with vitreous enamels, chromic acid mist produced during chromium plating, and other mists of materials whose liquid vehicle does not produce harmful gases or vapors.

(4) Air-purifying respirators, with replaceable filters, designed as respiratory protection against dusts, fumes, and mists having an air contamination level less than 0.05 milligram per cubic meter, including but not limited to lithium hydride and beryllium, and against radionuclides.

(5) Air-purifying respirators, with replaceable filters, designed as respiratory protection against radon daughters, and radon daughters attached to dusts, fumes, and mists.

(6) Air-purifying respirators, with replaceable filters, designed as respiratory protection against asbestos-containing dusts and mists.

(7) Air-purifying respirators, with replaceable filters, designed as protection against various combinations of particulate matter.

(8) Air-purifying dust respirators designed as respiratory protection against pneumoconiosis- and fibrosis-producing dusts, or dusts and mists, including but not limited to aluminum, asbestos, coal, flour, iron ore, and free silica.

(b) Gas masks containing filters for protection against dusts, fumes, mists, and smokes in combination with gases, vapors, or gases and vapors. These respirators are not for use against gases or vapors with poor warning properties (except where MSHA or Occupational Safety and Health Administration standards may permit such use for a specific gas or vapor) or those which generate high heats of reaction with sorbent material in the canister.

(c) Pesticide respirators, including all completely assembled respirators which are designed for use as respiratory protection during entry into and escape from atmospheres which contain pesticide hazards, are described according to their construction as follows:

(1) Front-mounted or back-mounted gas masks;

(2) Chin-style gas mask;

(3) Chemical cartridge;

(4) Air-purifying respirator with attached blower; and,

(5) Other devices, including combination respirators.

(d) Respirators with cartridges containing or having attached to them, filters for protection against mists of paints, lacquers, and enamels. These respirators are not for use against gases or vapors with poor warning properties (except where MSHA or Occupational Safety and Health Administration standards may permit such use for a specific gas or vapor) or those which generate high heats of reaction with sorbent material in the cartridge.

(e) Respirators with cartridges containing or having attached to them filters for protection against dusts, fumes, and mists, except the mists of paints, lacquers, and enamels. These respirators are not for use against gases or vapors with poor warning properties (except where MSHA or Occupational Safety and Health Administration standards may permit such use for a specific gas or vapor) or those which generate high heats of reaction with sorbent material in the cartridge.

§ 84.1131 Respirators; required components.

(a) Each respirator described in § 84.1130 shall, where its design requires, contain the following component parts:

(1) Facepiece, mouthpiece with noseclip, hood, or helmet;

(2) Filter unit, canister with filter, or cartridge with filter;

(3) Harness;

(4) Attached blower; and

(5) Breathing tube.

(b) The components of each respirator shall meet the minimum construction requirements set forth in Subpart G of this part.

§ 84.1132 Breathing tubes; minimum requirements.

(a) Flexible breathing tubes used in conjunction with respirators shall be designed and constructed to prevent:

(1) Restriction of free head movement;

(2) Disturbance of the fit of facepieces, mouthpieces, hoods, or helmets;

(3) Interference with the wearer's activities; and

(4) Shutoff of airflow due to kinking, or from chin or arm pressure.

§ 84.1133 Harnesses; installation and construction; minimum requirements.

(a) Each respirator shall, where necessary, be equipped with a suitable harness designed and constructed to hold the components of the respirator in position against the wearer's body.

(b) Harnesses shall be designed and constructed to permit easy removal and replacement of respirator parts, and, where applicable, provide for holding a full facepiece in the ready position when not in use.

§ 84.1134 Respirator containers; minimum requirements.

(a) Except as provided in paragraph (b) of this section each respirator shall be equipped with a substantial, durable container bearing markings which show the applicant's name, the type of respirator it contains, and all appropriate approval labels. Except for dust, fume, and mist respirators, the commercial designation of the respirator it contains shall be shown.

(b) Containers for single-use respirators may provide for storage of more than one respirator, however, such containers shall be designed and constructed to prevent contamination of respirators which are not removed, and to prevent damage to respirators during transit.

(c) Containers for gas masks combinations shall be designed and constructed to permit easy removal of the mask.

§ 84.1135 Half-mask facepieces, full facepieces, hoods, helmets, and mouthpieces; fit; minimum requirements.

(a) Half-mask facepieces and full facepieces shall be designed and constructed to fit persons with various facial shapes and sizes either:

(1) By providing more than one facepiece size; or

(2) By providing one facepiece size which will fit varying facial shapes and sizes.

(b) Full facepieces shall provide for optional use of corrective spectacles or lenses, which shall not reduce the respiratory protective qualities of the respirator.

(c) Hoods and helmets shall be designed and constructed to fit persons with various head sizes, provide for the optional use of corrective spectacles or lenses, and insure against any restriction of movement by the wearer.

(d) Mouthpieces shall be equipped with noseclips which are securely attached to the mouthpiece or respirator and provide an airtight seal.

(e) Facepieces, hoods, and helmets shall be designed to prevent eyepiece fogging.

(f) Half-mask facepieces shall not interfere with the fit of common industrial safety corrective spectacles, as determined by the Institute's facepiece tests in §§ 84.1141, 84.1142, and 84.1156(b).

§ 84.1136 Facepieces, hoods, and helmets; eyepieces; minimum requirements.

(a) Facepieces, hoods, and helmets shall be designed and constructed to provide adequate vision which is not distorted by the eyepieces.

(b) All eyepieces of gas masks combinations shall be designed and constructed to be impact and penetration resistant. Federal Specification, Mask, Air Line: and Respirator, Air Filtering, Industrial, GGG-M-125d, October 11, 1965, with interim amendment-1, July 30, 1969, is an example of an appropriate standard for determining impact and penetration resistance. Copies of GGG-M-125d may be obtained from the NIOSH, Certification and Quality Assurance Branch, 1095 Willowdale Road, Morgantown, WV 26505–2888.

§ 84.1137 Inhalation and exhalation valves; minimum requirements.

(a) Inhalation and exhalation valves shall be protected against distortion.

(b) Inhalation valves shall be designed and constructed and provided where necessary to prevent excessive exhaled air from adversely affecting filters, cartridges, and canisters, except where filters of dust, fume, and mist respirators are specifically designed to resist moisture as prescribed in § 84.1145.

(c) Exhalation valves shall be:

(1) Provided where necessary;

(2) Protected against damage and external influence; and

(3) Designed and constructed to prevent inward leakage of contaminated air.

§ 84.1138 Head harnesses; minimum requirements.

(a) All facepieces shall be equipped with head harnesses designed and constructed to provide adequate tension during use and an even distribution of pressure over the entire area in contact with the face.

(b) Facepiece head harnesses, except those employed on single-use dust, fume, and mist respirators, shall be adjustable and replaceable.

(c) Mouthpieces shall be equipped, where applicable, with adjustable and replaceable harnesses, designed and constructed to hold the mouthpiece in place.

§ 84.1139 Air velocity and noise levels; hoods and helmets; minimum requirements.

Noise levels generated by the respirator will be measured inside the hood or helmet at maximum airflow obtainable and shall not exceed 80 dBA.

§ 84.1140 Dust, fume, and mist respirators; performance requirements; general.

Dust, fume, and mist respirators and the individual components of each such device shall, as appropriate, meet the requirements for performance and protection specified in the tests described in §§ 84.1141 through 84.1152 and prescribed in Tables 12 and 13.

§ 84.1141 Isoamyl acetate tightness test; dust, fume, and mist respirators designed for respiratory protection against fumes of various metals having an air contamination level not less than 0.05 milligram per cubic meter; minimum requirements.

(a) The respirator will be modified in such a manner that all of the air that normally would be inhaled through the inhalation port(s) is drawn through an efficient activated charcoal-filled canister, or cartridge(s), without interference with the face-contacting portion of the facepiece.

(b) The modified respirator will be worn by persons for at least 2 minutes each in a test chamber containing 100 parts (by volume) of isoamyl-acetate vapor per million parts of air.

(c) The odor of isoamyl-acetate shall not be detected by the wearers of the modified respirator while in the test atmosphere.

§ 84.1142 Isoamyl acetate tightness test; respirators designed for respiratory protection against dusts, fumes, and mists having an air contamination level less than 0.05 milligram per cubic meter, or against radionuclides; minimum requirements.

(a) The applicant shall provide a charcoal-filled canister or cartridge of a size and resistance similar to the filter unit with connectors which can be attached to the facepiece in the same manner as the filter unit.

(b)(1) The canister or cartridge will be used in place of the filter unit, and persons will each wear a modified half-mask facepiece for 5 minutes in a test chamber containing 100 parts (by volume) of isoamyl-acetate vapor per million parts of air.

(2) The following work schedule will be performed by each wearer in the test chamber:

(i) Two minutes walking, nodding, and shaking head in normal movements; and

(ii) Three minutes exercising and running in place.

(3) The facepiece shall be capable of adjustment, according to the applicant's instructions, to each wearer's face, and the odor of isoamyl-acetate

shall not be detectable by any wearer during the test.

(c) Where the respirator is equipped with a full facepiece, hood, helmet, or mouthpiece, the canister or cartridge will be used in place of the filter unit, and persons will each wear the modified respiratory-inlet covering for 5 minutes in a test chamber containing 1,000 parts (by volume) of isoamyl-acetate vapor per million parts of air, performing the work schedule specified in paragraph (b)(2) of this section.

§ 84.1143 Dust, fume, and mist air-purifying filter tests; performance requirements; general.

Dust, fume, and mist respirators will be tested in accordance with the schedule set forth in Table 13 of this subpart to determine their effectiveness as protection against the particulate hazards specified in Table 13.

§ 84.1144 Silica dust test for dust, fume, and mist respirators; single-use or reusable filters; minimum requirements.

(a) Three non-powered respirators with single-use filters will be tested for periods of 90 minutes each at a continuous airflow rate of 32 liters per minute.

(b) The relative humidity in the test chamber will be 20–80 percent, and the room temperature approximately 25 °C.

(c) The test suspension in the chamber will not be less than 50 nor more than 60 milligrams of flint (99+ percent free silica) per cubic meter of air.

(d) The flint in suspension will be ground to pass 99+ percent through a 270-mesh sieve.

(e) The particle-size distribution of the test suspension will have a geometric mean of 0.4 to 0.6 micrometer, and the standard geometric deviation will not exceed 2.

(f) The total amount of unretained test suspension in samples taken during testing shall not exceed 1.5 milligrams for a non-powered air-purifying respirator.

(g) Three non-powered respirators with reusable filters will be tested and shall meet the requirements specified in paragraphs (a) through (f) of this section; each filter shall be tested three times: Once as received; once after cleaning; and once after recleaning. The applicant's instructions shall be followed for each cleaning.

§ 84.1145 Silica dust test; non-powered single-use dust respirators; minimum requirements.

(a) Three respirators will be tested.

(b) As described in § 84.1144, airflow will be cycled through the respirator by a breathing machine at the rate of 24 respirations per minute with a minute volume of 40 liters; a breathing machine cam with a work rate of 622 kg.-m.2/minute shall be used.

(c) Air exhaled through the respirator will be 35° ±2 °C. with 94 ±3 percent relative humidity. #

(d) Air inhaled through the respirator will be sampled and analyzed for respirator leakage.

(e) The total amount of unretained test suspension, after drying, in samples taken during testing, shall not exceed 1.8 milligrams for any single test.

§ 84.1146 Lead fume test for dust, fume, and mist respirators; minimum requirements.

(a) Three non-powered respirators will be tested for a period of 312 minutes each at a continuous airflow rate of 32 liters per minute.

(b) The relative humidity in the test chamber will be 20–80 percent, and the room temperature approximately 25 °C.

(c) The test suspension in the test chamber will not be less than 15 nor more than 20 milligrams of freshly generated lead-oxide fume, calculated as lead (Pb), per cubic meter of air.

(d) The fume will be generated by impinging an oxygen-gas flame on molten lead.

(e) Samples of the test suspension will be taken during each test period for analysis.

(f) The total amount of unretained test suspension in the samples taken during testing, which is analyzed and calculated as lead (Pb), shall not exceed 1.5 milligrams of lead for a non-powered air-purifying respirator.

§ 84.1147 Silica mist test for dust, fume, and mist respirators; minimum requirements.

(a) Three non-powered respirators will be tested for a period of 312 minutes each at a continuous airflow rate of 32 liters per minute.

(b) The room temperature in the test chamber will be approximately 25°C.

(c) The test suspension in the test chamber will not be less than 20 nor more than 25 milligrams of silica mist, weighed as silica dust, per cubic meter of air.

(d) Mist will be produced by spraying an aqueous suspension of flint (99+ percent free silica), and the flint shall be ground to pass 99+ percent through a 270-mesh sieve.

(e) Samples of the test suspension will be taken during each test period for analysis.

(f) The total amount of silica mist unretained in the samples taken during testing, weighed as silica dust, shall not exceed 2.5 milligrams for a non-powered air-purifying respirator.

§ 84.1148 Tests for respirators designed for respiratory protection against more than one type of dispersoid; minimum requirements.

Respirators designed as respiratory protection against more than one particulate hazard (dust, fume, or mist) shall comply with all the requirements of this part, with respect to each of the specific hazards involved.

§ 84.1149 Airflow resistance tests; all dust, fume, and mist respirators; minimum requirements.

(a) Resistance to airflow will be measured in the facepiece, mouthpiece, hood, or helmet of a dust, fume, or mist respirator mounted on a test fixture with air flowing at a continuous rate of 85 liters per minute, both before and after each test conducted in accordance with §§ 84.1144 through 84.1147.

(b) The maximum allowable resistance requirements for dust, fume, and mist respirators are as follows:

MAXIMUM RESISTANCE

[mm. water-column height]

Type of respirator	Initial inhalation	Final inhalation	Exhalation
Pneumoconiosis- and fibrosis-producing dusts, or dusts and mists	12	15	15
Dust, fume, and mist, with single-use filter	30	50	20
Dust, fume, and mist, with reusable filter	20	40	20
Radon daughter	18	[1] 25	15
Asbestos dust and mist	18	25	15

[1] Measured after silica dust test described in § 84.1144.

§ 84.1150 Exhalation valve leakage test; minimum requirements.

(a) Dry exhalation valves and valve seats will be subjected to a suction of 25 mm. water-column height while in a normal operating position.

(b) Leakage between the valve and valve seat shall not exceed 30 milliliters per minute.

§ 84.1151 DOP filter test; respirators designed as respiratory protection against dusts, fumes, and mists having an air contamination level less than 0.05 milligram per cubic meter and against radionuclides; minimum requirements.

(a) All single air-purifying respirator filter units will be tested in an atmosphere concentration of 100 micrograms of DOP per liter of air at continuous flow rates of 32 and 85 liters per minute for a period of 5 to 10 seconds.

(b) Where filters are to be used in pairs, the flow rates will be 16 and 42.5 liters per minute, respectively, through each filter.

(c) The filter will be mounted on a connector in the same manner as used on the respirator, and the total leakage for the connector and filter shall not exceed 0.03 percent of the ambient DOP concentration at either flow rate.

§ 84.1152 Silica dust loading test; respirators designed as protection against dusts, fumes, and mists having an air contamination level less than 0.05 milligram per cubic meter and against radionuclides; minimum requirements.

(a) Three non-powered respirators will be tested in accordance with the

provisions of § 84.1144, or equivalent, and shall meet the minimum requirements of §§ 84.1144 and 84.1149.

(b) Three powered air-purifying respirators will be tested in accordance with the provisions of § 84.1144 except they will be tested for a period of 4 hours each at a flowrate not less than 115 liters per minute to tight-fitting facepieces, and not less than 170 liters per minute to loose-fitting hoods and helmets. The total amount of unretained test suspension in samples taken during testing shall not exceed 14.4 milligrams for a powered air-purifying respirator with tight-fitting facepiece, and 21.3 milligrams for a powered air-purifying respirator with loose-fitting hood or helmet. They shall meet the minimum requirements of § 84.1149.

§ 84.1153 Dust, fume, mist, and smoke tests; canister bench tests; gas masks canisters containing filters; minimum requirements.

(a) Gas mask canisters containing filters for protection against dusts, fumes, mists, and smokes in combination with gases, vapors, or gases and vapors, will be tested as prescribed in § 84.1140 except for the breathing resistance which will be in accordance with § 84.122.

(b) Gas mask canisters designed for protection against smokes will be tested in an atmospheric concentration of 100 micrograms of dioctyl phthalate per liter of air at continuous flow rates of 32 liters per minute and 85 liters per minute for a period of 5 to 10 seconds, and the DOP leakage through the canister shall not exceed 0.03 percent of the test concentration.

(c) Gas mask canisters containing filters for protection against dusts, fumes, mists, and smokes in combination with gases, vapors, or gases and vapors, will be tested as prescribed in § 84.126.

§ 84.1154 Canister and cartridge requirements.

(a) Where two or more canisters or cartridges are used in parallel, their resistance to airflow shall be essentially equal.

(b) The color and markings of all canisters and cartridges or labels shall conform with the requirements of the American National Standards Institute, American National Standard for Identification of Air-Purifying Respirator Canisters and Cartridges, ANSI K13.1–1973. ANSI K13.1 is incorporated by reference and has been approved by the Director of the Federal Register in accordance with 5 U.S.C. 552(a) and 1 CFR part 51. Copies may be obtained from American National Standards Institute, Inc., 1430 Broadway, New York, NY 10018. Copies may be inspected at the NIOSH, Certification and Quality Assurance Branch, 1095 Willowdale Road, Morgantown, WV 26505–2888, or at the National Archives and Records Administration (NARA). For information on the availability of this material at NARA, call 202–741–6030, or go to: *http://www.archives.gov/federal_register/code_of_federal_regulations/ibr_locations.html.*

§ 84.1155 Filters used with canisters and cartridges; location; replacement.

(a) Particulate matter filters used in conjunction with a canister or cartridge shall be located on the inlet side of the canister or cartridge.

(b) Filters shall be incorporated into or firmly attached to the canister or cartridge and each filter assembly shall, where applicable, be designed to permit its easy removal from and replacement on the canister or cartridge.

§ 84.1156 Pesticide respirators; performance requirements; general.

Pesticide respirators and the individual components of each such device shall, as appropriate, meet the following minimum requirements for performance and protection:

(a) *Breathing resistance test.* (1) Airflow resistance will be measured in the facepiece, mouthpiece, hood, or helmet of a pesticide respirator mounted on a test fixture with air flowing at a continuous rate of 85 liters per minute, both before and after each test conducted in accordance with paragraphs (c) and (f) of this section.

(2) The maximum allowable resistance requirements for pesticide respirators are as follows:

MAXIMUM RESISTANCE

[mm. water-column height]

Type of pesticide respirator	Inhalation		Exhalation
	Initial	Final [1]	
Front- or back-mounted gas mask	70	85	20
Chin-style gas mask	65	80	20
Powered air-purifying [2]	[2] 50	[2] 70	20
Chemical Cartridge	50	70	20

[1] Measured at end of the service life specified in Table 14 of this subpart.
[2] Resistance of filter(s), cartridge(s), and breathing tube(s) only with blower not operating.

(b) *Facepiece test.* (1) The complete pesticide respirator will be fitted to the faces of persons having varying facial shapes and sizes.

(2) Where the applicant specifies a facepiece size or sizes for his respirator together with the approximate measurements of faces they are designed to fit, the Institute will provide test subjects to suit such facial measurements.

(3) Any pesticide respirator part which must be removed to perform the facepiece fit test shall be replaceable without special tools and without disturbing facepiece fit.

(4) The facepiece or mouthpiece fit test using positive or negative pressure recommended by the applicant and described in his instructions will be used during each test.

(5)(i) Each wearer will enter a chamber containing 1,000 p.p.m. isoamyl-acetate vapor for a respirator equipped with a full facepiece, mouthpiece, hood, or helmet and 100 p.p.m. isoamyl-acetate vapor for a respirator equipped with a half-mask facepiece.

(ii) The facepiece, mouthpiece, hood, or helmet may be adjusted, if necessary, in the test chamber before starting the test.

(iii) Each wearer will remain in the chamber while performing the following activities:

(A) Two minutes, nodding and turning head;

(B) Two minutes, calisthenic arm movements;

(C) Two minutes, running in place; and

(D) Two minutes, pumping with a tire pump into a 28-liter (1 cubic foot) container.

(iv) Each wearer shall not detect the odor of isoamyl-acetate during the test.

(c) *Silica dust test.* Three completely assembled pesticide respirators will be tested with a mechanical-testing apparatus as follows:

(1) Temperature in the test chamber will be approximately 25 °C.

(2) Continuous airflow through the respirator will be 32 liters per minute for front-mounted, back-mounted, and chin-style gas mask pesticide respirators and chemical cartridge pesticide respirators, and not less than 115 (4 cubic feet) liters per minute to tight-fitting facepieces and 170 liters (6 cubic feet) per minute to loose-fitting hoods and helmets of powered air-purifying respirators.

(3) The test aerosol will contain 50–60 milligrams of 99+ percent free silica per cubic meter of air.

(4) The particle size distribution of the test suspension will have a geometric mean diameter of 0.4 to 0.6 micrometer, with a standard geometric deviation less than 2.

(5) Front-mounted, back-mounted, and chin-style gas mask pesticide respirators and chemical cartridge pesticide respirators will be tested for 90 minutes and powered air-purifying respirators will be tested for 4 hours.

(d) *Lead fume test.* Three completely assembled pesticide respirators will be tested with a mechanical-testing apparatus as follows:

(1) Continuous airflow through the respirator will be 32 liters per minute for front-mounted, back-mounted, and chin-style gas mask pesticide respirators and chemical cartridge pesticide respirators and not less than 115 liters (4 cubic feet) per minute, for powered air-purifying respirators with tight-fitting facepieces, and not less than 170 liters (6 cubic feet) per minute for powered air-purifying respirators with loose-fitting hoods and helmets.

(2) The test aerosol will contain 15–20 milligrams of freshly generated lead-oxide fume, calculated as lead, per cubic meter of air.

(3) The fume will be generated by impinging an oxygen-gas flame on molten lead.

(4) Front-mounted, back-mounted, and chin-style gas mask pesticide respirators and chemical cartridge pesticide respirators will be tested for 90 minutes and powered air-purifying pesticide respirators will be tested for 4 hours.

(5) The total amount of unretained test suspension, which is analyzed and calculated as lead, shall not exceed:

(i) 0.43 milligram for any 90-minute test;

(ii) 4.8 milligrams for any 4-hour test made at 115 liters (4 cubic feet) per minute; or

(iii) 6.2 milligrams for any 4-hour test made at 170 liters (6 cubic feet) per minute.

(e) *Dioctyl-phthalate test.* (1) All canisters submitted for use with front-mounted and back-mounted gas mask pesticide respirators will be tested in an atmospheric concentration of 100 micrograms of dioctyl-phthalate per liter of air at continuous flow rates of 32 and 85 liters per minute for a test period of 5 to 10 seconds.

(2) The DOP leakage through the canister shall not exceed 0.03 percent of the ambient DOP concentration.

(f) *Bench tests for pesticide respirators.* (1)(i) Bench tests will be made on an apparatus that allows the test atmosphere at 50 ±5 percent relative humidity and at room temperature (25°±2.5 °C.) to enter the canister or cartridge at predetermined concentrations and rates of flow, and that has a means for determining the test life of the canister or cartridge against carbon tetrachloride.

(ii) Canisters and cartridges will be tested as they are used on each pesticide respirator, either singly or in pairs.

(iii) Three canisters or cartridges or pairs of cartridges will be removed from containers and tested as received from the applicant.

(iv) Two canisters, cartridges, or pairs of cartridges will be equilibrated at room temperature by passing 25 percent relative humidity air through them at the following flow rates (expressed as liters per minute (l.p.m.)) for 6 hours:

Type of canister or cartridge	Airflow rate, l.p.m.
Air-purifying canister	64
Air-purifying cartridge	25
Powered air-purifying with tight-fitting facepiece	115
Powered air-purifying with loose-fitting hood or helmet	170

(v) Two canisters, cartridges, or pairs of cartridges will be equilibrated at room temperature by passing 85 percent relative humidity air through them at the flow rates stated in paragraph (f)(1)(iv) of this section for 6 hours.

(vi) The equilibrated canisters or cartridges will be resealed, kept in an upright position at room temperature, and tested within 18 hours.

(2) Canisters and cartridges tested in accordance with the provisions of this section shall meet the requirements specified in Table 14 of this subpart.

§ 84.1157 Chemical cartridge respirators with particulate filters; performance requirements; general.

Chemical cartridge respirators with particulate filters and the individual components of each such device shall, as appropriate, meet the following minimum requirements for performance and protection:

(a) *Breathing resistance test.* (1) Resistance to airflow will be measured in the facepiece, mouthpiece, hood, or helmet of a chemical cartridge respirator mounted on a test fixture with air flowing at a continuous rate of 85 liters per minute, both before and after each test conducted in accordance with paragraphs (d) through (f) of this section.

(2) The maximum allowable resistance requirements for chemical cartridge respirators are as follows:

MAXIMUM RESISTANCE

[mm. water-column height]

Type of chemical cartridge respirator	Inhalation		Exhalation
	Initial	Final [1]	
For gases, vapors, or gases and vapors, and dusts, fumes, and mists	50	70	20
For gases, vapors, or gases and vapors, and mists of paints, lacquers, and enamels	50	70	20

[1] Measured at end of service life specified in Table 11 in subpart L of this part.

(b) *Facepiece test.* The facepiece test will be conducted as specified in § 84.205.

(c) *Lacquer and enamel mist tests; general.* (1) Three respirators with cartridges containing or having attached to them, filters for protection against mists of paints, lacquers, and enamels shall be tested in accordance with the provisions of paragraph (f) of this section.

(2) In addition to the test requirements set forth in paragraph (c)(1) of this section, three such respirators will be tested against each aerosol in accordance with the provisions of paragraphs (d) and (e) of this section.

(d) *Lacquer mist test.* (1) Temperature in the test chamber will be approximately 25 °C.

(2) Continuous airflow through the respirator will be 32 liters per minute for air-purifying respirators, and not less than 115 liters per minute to tight fitting facepieces and 170 liters per minute to loose-fitting hoods and helmets of powered air-purifying respirators.

(3) Airflow through the chamber will be 20–25 air changes per minute.

(4) The atomizer employed will be a No. 64–5 nozzle with setup 3, or equivalent, operating at 69 kN/m.^{2} (10 pounds per square inch gage).

(5) The test aerosol will be prepared by atomizing a mixture of one volume of clear cellulose nitrate lacquer and one volume of lacquer thinner. The lacquer described in Federal Specification TT-L-31, October 7, 1953, is an example of an acceptable lacquer. Copies of TT-L-31 may be inspected or obtained from the NIOSH, Certification and Quality Assurance Branch, 1095 Willowdale Road, Morgantown, WV 26505–2888.

(6) The concentration of cellulose nitrate in the test aerosol will be 95–125 milligrams per cubic meter.

(7) The test aerosol will be drawn to each respirator for a total of 156 minutes for air-purifying respirators and 240 minutes for powered air-purifying respirators.

(8) The total amount of unretained mist in the samples taken during testing, weighed as cellulose nitrate, shall not exceed 5 milligrams for an air-purifying respirator, 28 milligrams for a powered air-purifying respirator with tight-fitting facepiece, and 41 milligrams for a powered air-purifying respirator with loose-fitting hood or helmet.

(e) *Enamel mist test.* (1) Temperature in the test chamber will be approximately 25 °C.

(2) Continuous airflow through the respirator will be 32 liters per minute for air-purifying respirators, and not less than 115 liters per minute to tight-fitting facepieces and 170 liters per minute to loose-fitting hoods and helmets of powered air-purifying respirators.

(3) Airflow through the chamber will be 20–25 air changes per minute.

(4) The atomizer employed will be a No. 64 nozzle with setup 1A, or equivalent, operating at 69 kN/m.^{2} (10 pounds per square inch gage).

(5) The test aerosol will be prepared by atomizing a mixture of 1 volume of white enamel and 1 volume of turpentine. The enamel described in Federal Specification TT-E–489b, May 12, 1953, with amendment-1 of 9 November 1955 is an example of an acceptable enamel. Copies of TT-E–489b may be inspected or obtained from the NIOSH, Certification and Quality Assurance Branch, 1095 Willowdale Road, Morgantown, WV 26505–2888.

(6) The concentration of pigment in the test aerosol, weighed as ash, will be 95–125 milligrams per cubic meter.

(7) The test aerosol will be drawn to each respirator for a total of 156 minutes for air-purifying respirators and 240 minutes for power air-purifying respirators.

(8) The total amount of unretained mist in the samples taken during testing, weighed as ash, shall not exceed 1.5 milligrams for any air-purifying respirator, 8.3 milligrams for a powered air-purifying respirator with tight-fitting facepiece, and 12.3 milligrams for a powered air-purifying respirator with loose-fitting hood or helmet.

(f) *Bench tests; gas and vapor tests.* (1) Bench tests will be made in accordance with § 84.207 and tested cartridges shall meet the minimum requirements set forth in Table 11 of subpart L of this part. Cartridges will be equilibrated in accordance with paragraph (f)(2) of this section.

(2)(i) Two powered air-purifying cartridges or pairs of cartridges will be equilibrated at room temperature by passing 25 percent relative humidity air through them at the following flow rates (expressed in liters per minute (l.p.m.)) for 6 hours:

Type of cartridge	Airflow rate, l.p.m.
Powered air purifying with tight-fitting facepiece	115
Powered air purifying with loose-fitting hood or helmet	170

(ii) Two powered air-purifying cartridges or pairs of cartridges will be equilibrated by passing 85 percent relative humidity air through them at the flow rates stated in paragraph (f)(2)(i) of this section.

(iii) All cartridges will be resealed, kept in an upright position, at room temperatures, and tested within 18 hours.

§ 84.1158 Dust, fume, and mist tests; respirators with filters; minimum requirements; general.

(a) Three respirators with cartridges containing, or having attached to them, filters for protection against dusts, fumes, and mists, except the mists of paints, lacquers, and enamels, will be tested in accordance with the provisions of § 84.1157(f).

(b) In addition to the test requirements set forth in paragraph (a) of this section, three such respirators will be tested, as appropriate, in accordance with the provisions of §§ 84.1141 through 84.1152; however, the maximum allowable resistance of complete dust, fume, and mist, and gas, vapor, or gas and vapor chemical cartridge respirators shall not exceed the maximum allowable limits set forth in § 84.1157(a)(2).

Tables to Subpart KK of Part 84

Table 12—Facepiece Test Requirements

[42 CFR Part 84, Subpart KK]

Respirator types	Pressure tightness test [1]	Isoamyl acetate test	
		84.1141	84.1142
Dusts: Air Contamination Level not less than 0.05 mg/M^3 or 2 mppcf	X		
Fumes: Air Contamination Level not less than 0.05 mg/M^3	X	X	
Mists: Air Contamination Level not less than 0.05 mg/M^3 or 2 mppcf	X		
Dusts, Fumes, and Mists: Air Contamination Level less than 0.05 mg/M^3 or 2 mppcf, and radionuclides	X		X
Radon daughters	X	X	
Asbestos-containing dusts and mists	X		

[1] Test is required only where applicable.

TABLE 13—AIR-PURIFYING AND POWERED AIR-PURIFYING RESPIRATOR FILTER TESTS REQUIRED FOR APPROVAL

[42 CFR Part 84, Subpart KK]

Respirator types	Silica dust tests			Lead fume test 84.1146	Silica mist test 84.1147	DOP test 84.1151
	84.1144	84.1145	84.1152			
Dusts: Air Contamination Level not less than 0.05 mg/M^3 or 2 mppcf	X					
Fumes: Air Contamination Level not less than 0.05 mg/M^3				X		
Mists: Air Contamination Level not less than 0.05 mg/M^3 or 2 mppcf					X	
Dusts, Fumes, and Mists: Air Contamination Level less than 0.05 mg/M^3 or 2 mppcf, and radionuclides			X			X
Radon daughters	[1] X				[2] X	
Asbestos-containing dusts and mists	[2] X				[3] X	
Single use dust and mist respirators		[3] X			[3] X	

[1] For resistance only.
[2] For penetration only.
[3] Test required only where applicable.

TABLE 14—CARBON TETRACHLORIDE BENCH TESTS AND REQUIREMENTS FOR CANISTERS AND CARTRIDGES

[42 CFR part 84, Subpart KK]

Type of pesticide respirator	Test concentration p.p.m. CCl_4	Flow rate l.p.m.	Number of tests	Minimum life minutes [1]
Chest-mounted or back-mounted gas mask (as received)	20,000	64	3	12
Chest-mounted or back-mounted gas mask (equilibrated)	20,000	32	4	12
Chin-style gas mask (as received)	5,000	64	3	12
Chin-style gas mask (equilibrated)	5,000	32	4	12
Chemical Cartridge respirator (as received)	1,000	64	3	50
Chemical cartridge respirator (equilibrated)	1,000	32	4	50
Powered air-purifying respirator (tight-fitting facepiece, as received)	1,000	[2] 115	3	50
Powered air-purifying respirator (tight-fitting facepiece, equilibrated)	1,000	[2] 115	4	25
Powered air-purifying respirator (loose-fitting hood or helmet, as received)	1,000	[3] 170	3	50
Powered air-purifying respirator (loose-fitting hood or helmet, equilibrated)	1,000	[3] 170	4	25

[1] Minimum life will be determined at 5 p.p.m. leakage.
[2] The flow rate shall be the effective flow rate of the device, but shall be not less than 115 l.p.m.
[3] The flow rate shall be the effective flow rate of the device, but shall be not less than 170 l.p.m.

PART 85—REQUESTS FOR HEALTH HAZARD EVALUATIONS

Sec.
85.1 Applicability.
85.2 Definitions.
85.3 Procedures for requesting health hazard evaluations.
85.3–1 Contents of a request for health hazard evaluations.
85.4 Acting on requests.
85.5 Authority for investigations.
85.6 Advance notice of visits.
85.7 Conduct of investigations.
85.8 Provision of suitable space for employee interviews and examinations; identification of employees.
85.9 Representatives of employers and employees; employee requests.
85.10 Imminent dangers.
85.11 Notification of determination to employers, affected employees, and Department of Labor.
85.12 Subsequent requests for health hazard evaluations.

AUTHORITY: Sec. 8(g), 84 Stat. 1600; 29 U.S.C. 657(g) and sec. 508, 83 Stat. 803; 30 U.S.C. 957.

SOURCE: 37 FR 23640, Nov. 7, 1972, unless otherwise noted.

§ 85.1 Applicability.

This part 85 applies to health hazard evaluations requested by any employer or authorized representative of employees under section 20(a)(6) of the Occupational Safety and Health Act of 1970 or section 501(a)(11) of the Federal Mine Safety and Health Act of 1977.

This part is not intended to preclude the use of other channels of communication with the National Institute for Occupational Safety and Health to obtain information and technical assistance concerning toxic substances or physical agents.

[45 FR 2652, Jan. 14, 1980]

§ 85.2 Definitions.

Any term defined in the Occupational Safety and Health Act of 1970 or the Federal Mine Safety and Health Act of 1977 and not defined below shall have the meaning given it in the respective Acts. As used in this part:

OSH Act means the Occupational Safety and Health Act of 1970 (29 U.S.C. 651, *et seq.*).

FMSH Act means the Federal Mine Safety and Health Act of 1977 (30 U.S.C. 801, *et seq.*).

Authorized representative of employees means any person or organization meeting the conditions specified in § 85.3–1(e) (1), (2), or (3).

Employee has the same meaning as stated in the OSH Act and for the purposes of this part includes *miner* as defined in the FMSH Act.

Employer has the same meaning as stated in the OSH Act and for the purposes of this part includes *Operator* as defined in the FMSH Act.

Health hazard evaluation means the investigation and the determination of potentially toxic or hazardous effects of: (a) Any substance normally used or found in any place of employment to which the OSH Act is applicable, or (b) any substance or physical agent normally used or found in any place of employment to which the FMSH Act is applicable.

Investigation means a physical inspection of the place of employment under section 8 of the OSH Act or section 103 of the FMSH Act and includes inspection, sampling, observations, review of pertinent records, and other measurements reasonably necessary to determine whether any substance or physical agent found in the place of employment has potentially toxic or hazardous effects in the concentrations or levels used or found.

NIOSH means the National Institute for Occupational Safety and Health, Center for Disease Control, Public Health Service, Department of Health and Human Services.

NIOSH officer means a NIOSH employee who has been authorized by the Director, NIOSH, to conduct investigations according to this part.

Physical agent means any condition produced by the environment and/or work processes that can result in hazardous effects as defined in this section. Examples of physical agents are noise, temperature, illumination, vibration, radiation, and pressure.

Place of employment means any coal or other mine, factory, plant, establishment, construction site, or other area, workplace, or environment where work is performed by any employee of an employer.

Substance means any chemical or biological agent or dust which has the potential to produce toxic effects.

Toxic effects or *hazardous effects* are those effects which result in short- or long-term disease, bodily injury, affect health adversely, or endanger human life.

[45 FR 2652, Jan. 14, 1980]

§ 85.3 Procedures for requesting health hazard evaluations.

(a) Requests for health hazard evaluations should be addressed to the National Institute for Occupational Safety and Health as follows:

(1) *Requests from general industry*. Hazard Evaluations and Technical Assistance Branch, Division of Surveillance, Hazard Evaluations, and Field Studies, NIOSH, 4676 Columbia Parkway, Cincinnati, OH 45226.

(2) *Requests from mining industry*. Environmental Investigations Branch, Division of Respiratory Disease Studies, NIOSH, 944 Chestnut Ridge Road, Morgantown, WV 26505.

(b) Requests for health hazard evaluations shall be submitted in writing and signed by either: (1) The employer in whose place of employment the substance or physical agent is normally found, or (2) an authorized representative of employees (see § 85.3–1(e)) in the place of employment where the substance or physical agent is normally found.

[45 FR 2653, Jan. 14, 1980]

§ 85.3–1 Contents of a request for health hazard evaluation.

Each request for health hazard evaluation shall contain:

(a) The requester's name, address, and telephone number, if any.

(b) The name and address of the place of employment where the substance or physical agent is normally found.

(c) The specific process or type of work which is the source of the substance or physical agent, or in which the substance or physical agent is used.

(d) Details of the conditions or circumstances which prompted the request.

(e) A statement, if the requester is not the employer, that the requester is:

(1) An authorized representative or an officer of the organization representing the employees for purposes of collective bargaining; or

(2) An employee of the employer and is authorized by two or more employees employed in the same place of employment to represent them for purposes of these Acts (each such authorization shall be in writing and a copy submitted with the request for health hazard evaluation); or

(3) One of three or less employees employed in the place of employment where the substance or physical agent is normally found.

(f) A statement indicating whether or not the name(s) of the requester or those persons who have authorized the requester to represent them may be revealed to the employer by NIOSH.

(g) The following supplementary information if known to the requester:

(1) Identity of each substance or physical agent involved;

(2) The trade name, chemical name, and manufacturer of each substance involved;

(3) Whether the substance or its container or the source of the physical agent has a warning label; and

(4) The physical form of the substance or physical agent, number of people exposed, length of exposure (hours per day), and occupations of exposed employees.

NOTE: NIOSH has developed two forms entitled ''Request for Health Hazard Evaluation'' and ''Request for Mining Health Hazard Evaluation'' to assist persons in requesting evaluations. The forms are available upon request from the offices listed in § 85.3(a) (1) and (2) or from the Regional Consultant for Occupational Safety and Health in any Regional Office of the Department of Health and Human Services.

[45 FR 2653, Jan. 14, 1980]

§ 85.4 Acting on requests.

(a) Upon receipt of a request for health hazard evaluation submitted under this part, NIOSH will determine whether or not there is reasonable cause to justify conducting an investigation.

(b) If NIOSH determines that an investigation is justified, a NIOSH officer will inspect the place of employment, collect samples where appropriate, and perform tests necessary to the conduct of a health hazard evaluation, including medical examinations of employees.

(c) If NIOSH determines that an investigation is not justified, the requester will be notified in writing of the decision.

[45 FR 2653, Jan. 14, 1980]

§ 85.5 Authority for investigations.

(a) NIOSH officers who have been issued official NIOSH credentials (Form No. CDC/NIOSH 2.93) are authorized by the Director, NIOSH, under sections 20(a) (6) and 8 of the OSH Act and sections 501(a)(11) and 103 of the FMSH Act: To enter without delay any place of employment for the purpose of conducting investigations of all pertinent processes, conditions, structures, machines, apparatus, devices, equipment, records, and materials within the place of employment; and to conduct medical examinations, anthropometric measurements, and functional tests of employees within the place of employment as may be directly related to the specific health hazard evaluation being conducted. Investigations will be conducted in a reasonable manner, during regular working hours or at other reasonable times and within reasonable limits. In connection with any investigation, the NIOSH officers may question privately any employer, owner, operator, agent, or employee from the place of employment; and review, abstract, and duplicate records required by the Acts and regulations and any other related records.

(b) Areas under investigation which contain information classified by any agency of the United States Government in the interest of national security will be investigated only by NIOSH officers who have obtained the proper security clearance and authorization.

[45 FR 2653, Jan. 14, 1980]

§ 85.6 Advance notice of visits.

(a) Advance notice of visits to the place of employment may be given to expedite a thorough and effective investigation. Advance notice will not be given when, in the judgment of the NIOSH officer, giving such notice would adversely affect the validity and effectiveness of the investigation.

(b) Where a request in accordance with this part has been made by an authorized representative of employees, advance notice in accordance with paragraph (a) of this section will be given by NIOSH to the requester, the representative of the employees for purposes of collective bargaining if such representative is other than the requester, and to the employer.

(c) Where a request in accordance with this part has been made by any employer, advance notice will be given by NIOSH to the employer. Upon the request of the employer, NIOSH will inform the authorized representative of employees of the visit: *Provided*, The employer furnishes NIOSH in writing with the identity of such representative and with such information as is necessary to enable NIOSH promptly to inform such representative of the visit.

§ 85.7 Conduct of investigations.

(a) Prior to beginning an investigation, NIOSH officers shall present their credentials to the owner, operator, or agent in charge at the place of employment, explain the nature, purpose, and scope of the investigation and the records specified in § 85.5 which they wish to review. Where the investigation is the result of a request submitted by an authorized representative of employees, a copy of the request shall be provided to the employer, except where the requester or any person authorizing the requester pursuant to § 85.3–1(e)(2) has indicated that NIOSH not reveal his name to the employer, in which case a summary of the basis for the request shall be provided to the employer.

(b) At the commencement of an investigation, the employer should precisely identify information which can be obtained in the workplace or workplaces to be inspected as trade secrets. If the NIOSH officer has no clear reason to question such identification, such information shall not be disclosed except in accordance with the provisions of section 20(a)(6) and section 15 of the OSH Act or section 501(a)(11) of the FMSH Act. However, if NIOSH at any time questions such identification by an employer, not less than 15 days' notice to an employer shall be given of the intention to remove the trade secret designation from such information. The employer may within that period submit a request to the Director, NIOSH, to reconsider this intention and may provide additional information in support of the trade secret designation. The Director, NIOSH, shall notify the employer in writing of the decision which will become effective no sooner than 15 days after the date of such notice.

(c) NIOSH officers are authorized to collect environmental samples and samples of substances or measurements of physical agents (including measurement of employee exposure by the attachment of personal sampling devices to employees with their consent), to take or obtain photographs related to the purpose of the investigation, employ other reasonable investigative techniques, including medical examinations of employees with the consent of such employees, and to question privately any employer, owner, operator, agent, or employee. The employer shall have the opportunity to review photographs taken or obtained for the purpose of identifying those which contain or might reveal a trade secret.

(d) NIOSH officers shall comply with all safety and health rules and practices at the place of employment being investigated, and they shall provide and use appropriate protective clothing and equipment. In situations requiring specialized or unique types of protective equipment, such equipment shall be furnished by the employer.

(e) The conduct of investigations shall be such as to preclude unreasonable disruption of the operations of the employer's establishment.

[37 FR 23640, Nov. 7, 1972, as amended at 45 FR 2653, Jan. 14, 1980; 49 FR 4739, Feb. 8, 1984]

§ 85.8 Provision of suitable space for employee interviews and examinations; identification of employees.

An employer shall, in request of the NIOSH officer, provide suitable space, if such space is reasonably available, to NIOSH to conduct private interviews with, and examinations of, employees. NIOSH officers shall consult with the employer as to the time and place of the medical examination and shall schedule such examinations so as to avoid undue disruption of the operations of the employer's establishment. NIOSH shall conduct, and assume the medical costs of, examinations conducted under this part.

§ 85.9 Representatives of employers and employees; employee requests.

(a) NIOSH officers shall be in charge of investigations. Where the request for a health hazard evaluation has been made by an authorized representative of employees, a representative of the employer and a representative authorized by his employees who is an employee of the employer shall be given an opportunity to accompany the NIOSH officer during the initial physical inspection of any workplace for the purpose of aiding the investigation by identifying the suspected hazard. The NIOSH officer may permit additional employer representatives and such additional representatives authorized by employees to accompany him where he determines that such additional representatives will further aid the investigation. However, if in the judgment of the NIOSH officer, good cause has been shown why accompaniment by a third party who is not an employee of the employer is reasonably necessary to the conduct of an effective and thorough investigation of the workplace, such third party may accompany the NIOSH officer during the inspection: *Provided, however,* That access by such persons to areas described in paragraph (d) of this section shall be in accordance with the requirements of such provision, and access to areas described in paragraph (e) of this section shall be with the consent of the employer. A different employer and employee representative may accompany the officer during each different phase of an inspection if this will not interfere with the conduct of the investigation.

(b) NIOSH officers are authorized to resolve all disputes as to who is the representative authorized by the employer and employees for the purpose of this section. If there is no authorized representative of employees, or if the NIOSH officer is unable to determine with reasonable certainty who is such representative, he shall consult with a reasonable number of employees concerning matters directly related to the health hazard evaluation.

(c) NIOSH officers are authorized to deny the right of accompaniment under this section to any person whose conduct interferes with a fair and orderly physical inspection.

(d) With regard to information classified by an agency of the U.S. Government in the interest of national security, only persons authorized to have access to such information may accompany an officer in areas containing such information.

(e) Upon request of an employer, any representative authorized under this § 85.9 by employees in any area containing trade secrets shall be an employee in that area or an employee authorized by the employer to enter that area.

§ 85.10 Imminent dangers.

Whenever, during the course of, or as a result of, an investigation under this part, the NIOSH officer believes that there is a reasonable basis for an allegation of an imminent danger, NIOSH will immediately advise the employer and those employees who appear to be in immediate danger of such allegation and will inform appropriate representatives of the Department of Labor or the State agency designated under section 18(b) of the OSH Act.

[37 FR 23640, Nov. 7, 1972, as amended at 45 FR 2653, Jan. 14, 1980]

§ 85.11 Notification of determination to employers, affected employees and Department of Labor.

(a) Upon conclusion of an investigation, NIOSH will make a determination concerning the potentially toxic or hazardous effects of each substance or physical agent investigated as a result of the request for health hazard evaluation. At a minimum, the determination will: (1) Identify each substance or physical agent involved and describe, where appropriate, the concentrations or levels of the substance or physical agent found in the place of employment and the conditions of use, and (2) state whether each substance or physical agent has potentially toxic or hazardous effects in the concentrations or levels found, as well as the basis for the judgments.

(b) Copies of the determination will be mailed to the employer and to the authorized representatives of employees.

(c) Except as hereinafter provided, the employer shall post a copy of the determination for a period of 30 calendar days at or near the workplace(s) of affected employees. The employer shall take steps to insure that the posted determinations are not altered, defaced, or covered by other material during such period. The employer will not be required to post the determination if the employer requests that copies of the determination be mailed to affected employees and furnishes NIOSH with a list of the names and mailing addresses of the employees employed in the workplace(s) designated by the NIOSH Officer. In the latter event, NIOSH will mail such copies to affected employees at the mailing addresses provided by the employer.

(d) For purposes of this section, the term ''affected employees'' means those employees determined by NIOSH to be exposed to the substance(s) or physical agent(s) which is the subject of the health hazard evaluation.

(e) Copies of determinations made under the OSH Act will be forwarded to the Department of Labor and the appropriate State agency designated under section 18(b) of the OSH Act. Copies of determinations made under the FMSH Act will be forwarded to the Mine Safety and Health Administration of the Department of Labor; the Bureau of Mines, Department of the Interior; and the State agency which, in the judgment of NIOSH, would benefit the most from the information. If NIOSH determines that any substance or physical agent has potentially toxic or hazardous effects at the concentrations or levels at which it is used or found in a place of employment, and the substance or physical agent is not covered by a safety or health standard established under section 6 of the OSH Act or section 101 of the FMSH Act, NIOSH will immediately submit the determination to the Secretary of Labor, together with all pertinent criteria.

[37 FR 23640, Nov. 7, 1972, as amended at 45 FR 2653, Jan. 14, 1980]

§ 85.12 Subsequent requests for health hazard evaluations.

If a request is received for a health hazard evaluation in a place of employment in which an evaluation under this part was made previously, NIOSH may make another investigation if, as a result of the passage of time or additional information, another investigation would be consistent with the purposes of the Acts.

[45 FR 2654, Jan. 14, 1980]

PART 85a—OCCUPATIONAL SAFETY AND HEALTH INVESTIGATIONS OF PLACES OF EMPLOYMENT

Sec.

85a.1 Applicability.
85a.2 Definitions.
85a.3 Authority for investigations of places of employment.
85a.4 Procedures for initiating investigations of places of employment.
85a.5 Conduct of investigations of places of employment.
85a.6 Provision of suitable space for employee interviews and examinations.
85a.7 Imminent dangers.
85a.8 Reporting of results of investigations of places of employment.

AUTHORITY: Sec. 8(g), 84 Stat. 1600; 29 U.S.C. 657(g) and sec. 508, 83 Stat. 803; 30 U.S.C. 957.

§ 85a.1 Applicability.

(a) Except as otherwise provided in paragraph (b) of this section, the provisions of this part apply to investigations of places of employment which are conducted by NIOSH under sections 20 and 8 of the Occupational Safety and Health Act of 1970 and sections 501 and 103 of the Federal Mine Safety and Health Act of 1977.

(b) The provisions of this part do not apply to those activities covered by part 85 of this chapter.

[41 FR 45002, Oct. 14, 1976, as amended at 45 FR 2654, Jan. 14, 1980]

§ 85a.2 Definitions.

Any term defined in the Occupational Safety and Health Act of 1970 or the Federal Mine Safety and Health Act of 1977 and not defined below shall have the meaning given it in the Acts. As used in this part:

(a) *OSH Act* means the Occupational Safety and Health Act of 1970 (29 U.S.C. 651 *et seq.*) and *FMSH Act* means the Federal Mine Safety and Health Act of 1977 (30 U.S.C. 801 *et seq.*).

(b) *Assistant Regional Director* means any one of the ten Occupational Safety and Health Administration Assistant Regional Directors for Occupational Safety and Health.

(c) *Informed consent* means the knowing consent of an individual or his legally authorized representative, so situated as to be able to exercise free power of choice without undue inducement or any element of force, fraud, deceit, duress, or other form of constraint or coercion. The basic elements of information necessary to such consent include:

(1) A fair explanation of the procedures to be followed, and their purposes, including identification of any procedures which are experimental;

(2) A description of any attendant discomforts and risks reasonably to be expected;

(3) A description of any benefits reasonably to be expected;

(4) A disclosure of any appropriate alternative procedures that might be advantageous for the subject;

(5) An offer to answer any inquiries concerning the procedures; and

(6) An instruction that the person is free to withdraw his consent and to discontinue participation in the investigation any time without prejudice to the subject.

(d) *Investigation* means research projects, experiments, demonstrations, studies, and similar activities of NIOSH which are conducted under section 20 of the OSH Act and section 501 of the FMSH Act.

(e) *Legally authorized representative* means an individual or judicial or other body authorized under applicable law to consent on behalf of a prospective subject to such subject's participation in the particular activity or procedure.

(f) *NIOSH* means the National Institute for Occupational Safety and Health of the Center for Disease Control, Public Health Service, Department of Health and Human Services.

(g) *NIOSH authorized representative* means a person authorized by NIOSH to conduct investigations of places of employment, including any person that is fulfilling a contract agreement with NIOSH or is serving as an expert or consultant to NIOSH pursuant to the Act.

(h) *NIOSH Regional Office* means any one of the ten Department of Health and Human Services Regional Offices, the addresses of which are specified in § 5.31 of title 45, Code of Federal Regulations.

(i) *Place of employment* means any coal or other mine, factory, plant, establishment, construction site, or other area, workplace or environment where work is performed by any employee of an employer.

(j) *MSHA District Office* means any one of the Mine Safety and Health Administration's District Offices.

(k) *BOM* means the Bureau of Mines, Department of the Interior.

(l) *Employee* has the same meaning as stated in the OSH Act and for the purposes of this part includes *miner* as defined in the FMSH Act.

(m) *Employer* has the same meaning as stated in the OSH Act and for the purposes of this part includes *operator* as defined in the FMSH ACT.

[41 FR 45002, Oct. 14, 1976, as amended at 45 FR 2654, Jan. 14, 1980]

§85a.3 Authority for investigations of places of employment.

(a) NIOSH authorized representatives who have been issued official NIOSH credentials are authorized by the Director, NIOSH, under sections 20 and 8 of the OSH Act, sections 501 and 103 of the FMSH Act, and this part. To enter without delay any place of employment for the purpose of conducting investigations of all pertinent processes, conditions, structures, machines, apparatus, devices, equipment, and materials within the place of employment; and to conduct medical examinations, anthropometric measurements and functional tests of employees within the place of employment as may be directly related to the specific investigation being conducted. Such investigations will be conducted in a reasonable manner, during regular working hours or at other reasonable times and within reasonable limits. In connection with any investigations, such NIOSH authorized representatives may question privately any employer, owner, operator, agent, or employee from the place of employment; and review, abstract, or duplicate employment records, medical records, records required by the Act and regulations, and other related records. In those instances where systems of records subject to review, abstraction or duplication are of a confidential nature, such as medical records, and are abstracted or duplicated, NIOSH will maintain such systems in accordance with the Privacy Act of 1974 (5 U.S.C. 552a) and the implementing regulation of the Department of Health and Human Services (45 CFR part 5b).

(b) Areas under investigation which contain information classified by any agency of the United States Government in the interest of national security will be investigated only by NIOSH authorized representatives who have obtained the appropriate security clearance and authorization.

[41 FR 45002, Oct. 14, 1976, as amended at 45 FR 2654, Jan. 14, 1980]

§85a.4 Procedures for initiating investigations of places of employment.

(a) Except as otherwise provided in paragraph (b) of this section, NIOSH authorized representatives will contact an official representative of the place of employment prior to any site visits and will provide the details of why an investigation of the place of employment is being conducted. Prior to the initiation of a site visit of a place of employment, representatives of the following organizations will be advised of the site visit and the reason for its conduct:

(1) The appropriate State agency designated under section 18(b) of the OSH Act, or if no State agency has been designated under the OSH Act and in the case of the FMSH Act, the State agency which, in the judgment of NIOSH, would benefit the most from the investigation's findings;

(2) If there is a local union at the place of employment, the local president, business manager or other appropriate individual;

(3) The appropriate Assistant Regional Director, when investigations are conducted under the OSH Act;

(4) The appropriate MSHA District Office; the Director, BOM, and the Assistant Director for Mining, BOM, when investigations are conducted under the FMSH Act.

(b) Advance notice of site visits will not be given to the place of employment or local union at the place of employment when, in the judgment of the NIOSH authorized representatives, giving such notice would adversely affect the validity and effectiveness of an investigation. Those individuals and organizations specified in §85a.4(a)(1), (a)(3) and (a)(4) will be notified prior to the initiation of such a site visit. After the site visit has been initiated, and, as soon as possible thereafter, the NIOSH authorized representatives will contact those individuals specified in §85a.4(a)(2) concerning the nature and details of the site visit.

(c) In those instances where site visits are not necessary to the conduct of an investigation, the NIOSH authorized representatives will contact an official representative of the place of employment either verbally or through a written communication and provide the details of why an investigation of the place of employment is being conducted. If appropriate, the NIOSH authorized representatives will contact

those individuals stipulated in paragraphs (a)(1), (a)(2), (a)(3), and (a)(4) of this section about the nature and details of the investigation.

[41 FR 45002, Oct. 14, 1976, as amended at 45 FR 2654, Jan. 14, 1980]

§ 85a.5 Conduct of investigations of places of employment.

(a)(1) Prior to beginning a site visit, NIOSH authorized representatives will present their credentials to the employer, owner, operator or agent in charge at the place of employment, explain the nature, purpose and scope of the investigation and the records specified in § 85a.3 which they wish to review, abstract or duplicate.

(2) In those instances where site visits are not necessary to the conduct of an investigation and the initial contact is made verbally, NIOSH authorized representatives will, at the request of the employer, owner, operator or agent in charge at the place of employment, provide a written explanation of the nature, purpose and scope of the investigation and the records specified in § 85a.3 which they wish to review, abstract or duplicate.

(b)(1) At the commencement of an investigation, the employer, owner, operator or agent in charge at the place of employment shall precisely identify that information which is trade secret and might be seen or obtained by the NIOSH authorized representatives during the investigation. If the NIOSH authorized representatives have no clear reason to question such identification, such information will not be disclosed by NIOSH in accordance with the provisions of section 15 of the OSH Act. Generally, NIOSH will not question trade secret designations; however, if NIOSH at any time does question such identification, not less than 15 days' notice to the employer, owner, operator or agent will be given of the intention to remove the trade secret designation from such information. The employer, owner, operator or agent may within that period submit a request to the Director, NIOSH, to reconsider this intention and may provide additional information in support of the trade secret designation. The Director, NIOSH, will notify the employer, owner, operator or agent in writing of the decision which will become effective no sooner than 15 days after the date of such notice.

(2) In those instances where the NIOSH authorized representative is a person fulfilling a contact agreement with NIOSH or is serving as an expert or consultant to NIOSH pursuant to the Act, the employer, owner, operator or agent in charge at the place of employment may, after advising the NIOSH contractor or consultant in writing, elect to withhold information deemed to be a trade secret from such a NIOSH authorized representative or prohibit entry into the area of the place of employment where such entry will reveal trade secrets. In those instances, where the subject information is needed or access to the area of the place of employment is necessary, in the judgment of NIOSH, to fulfill the goals of the investigation, NIOSH regular employees will then obtain the information or enter the subject area of the place of employment.

(c)(1) NIOSH authorized representatives will be in charge of site visits conducted pursuant to this part.

(2) Where there is a request by the representative of the State agency and/or employees, who were notified pursuant to § 85a.4(a)(1) or § 85a.4(a)(2) to accompany the NIOSH authorized representatives during the site visit of the place of employment, the NIOSH authorized representatives will allow this request if they determine that this will aid the investigation; or where, in the judgment of the NIOSH authorized representatives, good cause has been shown why accompaniment by a third party who is not an employee of the employer is reasonably necessary to the conduct of an effective and thorough site visit, they may permit such third party to accompany them during the site visit: *Provided however*, That access by such person(s) to areas described in § 85a.5(c)(4) shall be in accordance with the requirements of such provision and access to areas containing trade secrets shall be with the consent of the employer, owner, operator or agent in charge at the place of employment.

(3) NIOSH authorized representatives are authorized to deny the right of accompaniment under this paragraph to

any person whose conduct in their judgment interferes with a fair and orderly site visit. In all instances, a representative of the employer shall be permitted to accompany the NIOSH authorized representatives during the site visit of the place of employment.

(4) With regard to information classified by an agency of the United States Government in the interest of national security, only persons authorized to have access to such information may accompany NIOSH authorized representatives in areas containing such information.

(d)(1) NIOSH authorized representatives are authorized: To collect environmental samples and samples of substances; to measure environmental conditions and employee exposures (including measurement of employee exposure by the attachment of personal sampling devices to employees with their consent); to take or obtain photographs, motion pictures or videotapes related to the purpose of the investigation; to employ other reasonable investigative techniques, including medical examinations, anthropometric measurements and standardized and experimental functional tests of employees with the informed consent of such employees; to review, abstract, and duplicate such personnel records as are pertinent to mortality, morbidity, injury, safety, and other similar studies; and to question and interview privately any employer, owner, operator, agency, or employee from the place of employment. The employer, owner, operator, or agency shall have the opportunity to review photographs, motion pictures, and videotapes taken or obtained for the purpose of identifying those which contain or might reveal a trade secret.

(2) Prior to the conduct of medical examinations, anthropometric measurements or functional tests of any employees, the NIOSH authorized representatives will obtain approval of the procedures to be utilized from the NIOSH Human Subjects Review Board and no employee examination, measurement or test will be undertaken without the informed consent of such employee.

(e) NIOSH authorized representatives will comply with all safety and health rules and practices at the place of employment and all NIOSH, Occupational Safety and Health Administration, and Mine Safety and Health Administration regulations and policies during a site visit and will provide and use appropriate protective clothing and equipment. In situations requiring specialized or unique types of protective equipment, such equipment shall be furnished by the employer, owner, operator or agent in charge at the place of employment.

(f) The conduct of site visits will be such as to preclude unreasonable disruption of the operations of the place of employment.

[41 FR 45002, Oct. 14, 1976, as amended at 45 FR 2654, Jan. 14, 1980; 49 FR 4739, Feb. 8, 1984]

§ 85a.6 Provision of suitable space for employee interviews and examinations.

An employer, owner, operator or agent in charge at the place of employment shall, on request of the NIOSH authorized representatives, provide suitable space at the place of employment, if such space is reasonably available, to NIOSH to conduct private interviews with, and medical examinations, anthropometric measurements and functional tests of employees. NIOSH authorized representatives will consult with the employer, owner, operator or agent as to the time and place of the private interviews, medical examination, anthropometric measurements and functional tests and will schedule same so as to avoid undue disruption of work at the place of employment. NIOSH will conduct the medical interviews, measurements, examinations and tests specified under this part at its own expense.

[41 FR 45002, Oct. 14, 1976]

§ 85a.7 Imminent dangers.

Whenever, during the course of, or as a result of, an investigation under this part, the NIOSH authorized representatives believe there is a reasonable basis for an allegation of an imminent danger, NIOSH will immediately advise the employer, owner, operator or agent in charge at the place of employment and those employees who appear to be in immediate danger of such allegation

and will inform the agencies identified in § 85a.4(a)(1), (a)(3), and (a)(4).

[41 FR 45002, Oct. 16, 1976, as amended at 45 FR 2654, Jan. 14, 1980]

§ 85a.8 Reporting of results of investigations of places of employment.

(a)(1) Specific reports of investigations of each place of employment under this part, with identification of the place of employment, will be made available by NIOSH to the employer, owner, operator or agent in charge at the place of employment, with copies to the appropriate officials and Agencies notified pursuant to § 85a.4(a). Prior to release of such reports, a preliminary report will be sent by NIOSH to the employer, owner, operator or agent for review for trade secret information and technical inaccuracies that may inadvertently be presented in the report. If requested in writing, the data used to compile the reports will be made available by NIOSH to the employer, owner, operator or agent in charge at the place of employment, except that data will not be released in a form that is individually identifiable.

(2) All specific reports of investigations of each place of employment under this part will be available to the public from the NIOSH Regional Consultant for Occupational Safety and Health in the appropriate NIOSH Regional Office.

(3) In certain instances, specific reports of investigations of each place of employment will not be prepared. In such instances, a closing conference at the place of employment will be conducted by the NIOSH authorized representatives and those individuals participating in the site visit to discuss the findings of the site visit and appropriate recommendations.

(b)(1) Any specific findings of individual employee medical examinations, anthropometric measurements and functional tests will be released by NIOSH authorized representatives to the company physician, private physician, or other person only pursuant to the written authorization of the employee; otherwise, the specific findings and other personal records concerning individuals will be maintained in accordance with 45 CFR part 5b and section 3 of the Privacy Act of 1974 (5 U.S.C. 552a). Notice of all NIOSH systems of records as defined in 45 CFR 5b.1(n) as a result of the investigations of places of employment pursuant to this part will be published in the FEDERAL REGISTER under Notices of Systems of Records for the Department of Health and Human Services.

(2) In cases where an employee shows positive significant medical findings, the employee and the physician(s) designated by the employee under § 85a.8(b)(1) will be immediately notified by NIOSH.

(3) A summary of the findings of the examinations for each employee will be sent by NIOSH to the individual.

(c) The findings of a total investigation generally will be disseminated as part of NIOSH criteria documents, NIOSH technical reports, NIOSH information packets, scientific journals, presentations at technical meetings, or in other similar manners. These findings of a total investigation will be presented in a manner which does not identify any specific place of employment; however, it should be noted that the specific reports of investigations of each place of employment under this part are subject to mandatory disclosure, upon request, under the provisions of the Freedom of Information Act (5 U.S.C. 552).

[41 FR 45002, Oct. 14, 1976]

PART 86—GRANTS FOR EDUCATION PROGRAMS IN OCCUPATIONAL SAFETY AND HEALTH

Subpart A—General

Sec.
86.1 Applicability.
86.2 Definitions.
86.3 Inventions and discoveries.
86.4 Publications and copyrights.
86.5 Grant appeals procedure.

Subpart B—Occupational Safety and Health Training Grants

86.10 Nature and purpose of training grants.
86.11 Eligibility.
86.12 Application for a grant.
86.13 Project requirements.
86.14 Evaluation and grant award.
86.15 Payments.
86.16 Use of project funds.
86.17 Nondiscrimination.
86.18 Grantee accountability.

86.19 Human subjects; animal welfare.
86.20 Additional conditions.
86.21 Applicability of 45 CFR part 74.

Subpart C—Occupational Safety and Health Direct Traineeships

86.30 Nature and purpose of direct traineeships.
86.31 Eligibility; minimum requirements.
86.32 Application for direct traineeship.
86.33 Human subjects; animal welfare.
86.34 Evaluation and award of direct traineeships.
86.35 Payments.
86.36 Duration and continuation.
86.37 Terms and conditions.
86.38 Accountability.
86.39 Termination of direct traineeship.

AUTHORITY: Sec. 8(g), 84 Stat. 1600, 29 U.S.C. 657(g); sec. 21(a), 84 Stat. 1612, 29 U.S.C. 670(a).

SOURCE: 40 FR 29076, July 10, 1975, unless otherwise noted.

Subpart A—General

§ 86.1 Applicability.

The regulations of this part are applicable to the award of training grants and direct traineeships pursuant to section 21(a)(1) of the Occupational Safety and Health Act of 1970 (29 U.S.C. 670(a)(1)) to assist in providing an adequate supply of qualified personnel to carry out the purposes of the Act.

§ 86.2 Definitions.

Any term not defined herein shall have the same meaning as given it in the Act. As used in this part:

(a) *Act* means the Occupational Safety and Health Act of 1970 (29 U.S.C. 651 *et seq.*).

(b) [Reserved]

(c) *Secretary* means the Secretary of Health and Human Services and any other officer or employee of the Department of Health and Human Services to whom the authority involved has been delegated.

(d) *State* means a State of the United States, the District of Columbia, Puerto Rico, the Virgin Islands, American Samoa, Guam, and the Trust Territory of the Pacific Islands.

(e) *Training* means job-specific skill development, the purpose of which is to provide qualified personnel to carry out the purposes of the Act.

[40 FR 29076, July 10, 1975, as amended at 47 FR 53012, Nov. 24, 1982]

§ 86.3 Inventions and discoveries.

Any grant award pursuant to § 86.14 or § 86.33 is subject to the regulations of the Department of Health and Human Services as set forth in 45 CFR parts 6 and 8, as amended. Such regulations shall apply to any activity for which grant funds are in fact used whether within the scope of the project as approved or otherwise. Appropriate measures shall be taken by the grantee and by the Secretary to assure that no contracts, assignments or other arrangements inconsistent with the grant obligation are continued or entered into and that all personnel involved in the supported activity are aware of and comply with such obligations. Laboratory notes, related technical data, and information pertaining to inventions and discoveries shall be maintained for such periods, and filed with or otherwise made available to the Secretary, or those he may designate at such times and in such manner, as he may determine necessary to carry out such Department regulations.

§ 86.4 Publications and copyrights.

Except as may otherwise be provided under the terms and conditions of the award, the grantee may copyright without prior approval any publications, films or similar materials developed or resulting from a project supported by a grant under this part, subject, however, to a royalty-free, nonexclusive, and irrevocable license or right in the Government to reproduce, translate, publish, use, disseminate, and dispose, of such materials and to authorize others to do so.

§ 86.5 Grant appeals procedure.

The informal Public Health Service procedure for resolution of post-award grant disputes set forth in subpart D of part 50 of this title and the Department post-award grant appeals procedure in 45 CFR part 16 are applicable to any award made pursuant to this part.

Subpart B—Occupational Safety and Health Training Grants

§ 86.10 Nature and purpose of training grants.

(a) *Long-term training project grant.* A long-term training project grant is an award of funds to an eligible institution or agency, hereinafter called the ''grantee,'' to pay part or all of the costs of organized identifiable activities, hereinafter termed the ''project,'' that are undertaken to establish, strengthen, or expand graduate, undergraduate, or special training, of persons in the field of occupational safety and health. Such grants may be used to support training in, for example, occupational medicine, industrial hygiene, industrial nursing and occupational safety engineering and the training of technicians and paraprofessionals in such areas.

(b) *Short-term training project grant.* A short-term training project grant is an award of funds to an eligible institution or agency, hereinafter called the ''grantee,'' to pay part or all of the costs of organized identifiable activities, hereinafter termed the ''project'' that are undertaken to provide intensive training programs of less than 1 year for any one or a combination of the following purposes:

(1) To provide specialized instruction for occupational safety and health professional or career personnel which will increase their competence in an area in their respective fields.

(2) To prepare or expand the capabilities of occupational safety and health professional or career personnel for leadership roles as administrators or supervisors, and

(3) To prepare or expand the teaching capabilities of occupational safety and health professionals and career personnel.

(c) *Educational Resource Center Grant.* An educational resource center grant is an award of funds to an eligible institution or agency, hereinafter called the ''grantee,'' to pay part or all of the costs of organized identifiable activities, hereinafter termed the ''project,'' that are undertaken to provide for the combination of long-term and short-term training activities as described in § 86.13 (c).

[40 FR 29076, July 10, 1975, as amended at 42 FR 52401, Sept. 30, 1977]

§ 86.11 Eligibility.

(a) *Eligible applicants.* Any public or private educational or training agency or institution located in a state is eligible to apply for a grant under this subpart.

(b) *Projects eligible for long-term or short-term training grants or educational resource center grants.* Any project found by the Secretary to be a long-term training project within the meaning of § 86.10(a) or a short-term training project within the meaning of § 86.10(b) or an educational resource center grant project within the meaning of § 86.10(c) shall be eligible for a grant award. However, no applicant is eligible for assistance for a separate training project grant in any project period in which it receives an educational resource center grant. Nothing in the section shall prevent an existing training grant from being incorporated into an educational resource center grant award.

[40 FR 29076, July 10, 1975, as amended at 42 FR 52401, Sept. 30, 1977; 47 FR 53012, Nov. 24, 1982]

§ 86.12 Application for a grant.

(a) An application for a grant under this subpart shall be submitted to the Secretary at such time and in such form and manner as the Secretary may prescribe.[1] The application shall contain a full and adequate description of the project and of the manner in which the applicant intends to conduct the project in accordance with the requirements of this subpart, and a budget and justification of the amount of grant funds requested, and such other pertinent information as the Secretary may require.

(b) The application shall be executed by an individual authorized to act for the applicant and to assume for the applicant the obligations imposed by the

[1] Applications and instructions may be obtained from the Procurement and Grants Office, Centers for Disease Control, Atlanta, GA 30333.

regulations of this subpart and any additional conditions of the grant.

[40 FR 29076, July 10, 1975, as amended at 49 FR 38117, Sept. 27, 1984]

§ 86.13 Project requirements.

(a) An approvable application for a long-term training grant must contain each of the following, unless the Secretary determines that the applicant has established good cause for its omission.

(1) Provision of a method for development of the training curriculum and any attendant training materials and resources;

(2) Provision of a method for implementation of the needed training;

(3) Provision of an evaluation methodology, including the manner in which such methodology will be employed, to measure the achievement of the objectives of the training program; and

(4) Provision of a method by which trainees will be selected.

(b) In addition to the requirements set forth in paragraph (a) of this section, an approvable application for a short-term training grant must contain each of the following, unless the Secretary determines that the applicant has established good cause for its omission.

(1) Provision of a methodology to assess the particular skills, or knowledge that prospective trainees need to develop;

(2) Provision of at least 18 hours of formal instruction for a period of not less than 2½ days and not more than 1 academic year; and

(3) Assurances that no portion of the Federal funds will be used for (i) in-service training courses designed only for employees of a single agency, institution, or organization; (ii) correspondence courses; (iii) regular courses usually given for academic credit; or (iv) training the grantee's financial officers, program director, or the official who executed the application.

(c) In addition to the requirements set forth in paragraphs (a), (b)(1), and (b)(3) (ii), (iii) and (iv) of this section, an approvable application for an educational resource center grant must contain each of the following, unless the Secretary determines that the applicant has established good cause for its omission:

(1) A description, supported by appropriate documents, of cooperative arrangements to conduct an educational resource center among a medical school (with an established program in preventive or occupational medicine), a school of nursing, a school of public health or its equivalent, and a school of engineering or its equivalent. Other schools or departments with relevant disciplines and resources—e.g., toxicology, biostatistics, environmental health, law, business administration, education—may be represented and contribute as appropriate to the conduct of the total program.

(2) The identification of an educational resource center Director who possesses a demonstrated capacity for sustained productivity and leadership in occupational safety and health training who shall oversee the general operation of the educational resource center program and shall, to the extent possible, directly participate in training activities.

(3) A description of the full-time professional staff representing various disciplines and qualifications relevant to occupational safety and health and capable of planning, establishing, and carrying out or administering training projects undertaken by the educational resource center.

(4) A description of the training and research expertise, appropriate facilities and ongoing training and research activities in occupational safety and health areas.

(5) A description of its program for conducting education and training of occupational health physicians, occupational health nurses, industrial hygienists/engineers and safety personnel. There shall be full-time students in each of these core disciplines, with a goal of a minimum total of 30 full-time students. Training may also be conducted in other occupational safety and health career categories, e.g., industrial toxicology, biostatistics, epidemiology, and ergonomics. Training programs shall include appropriate field experience including experience with public health and safety agencies and labor-management health and safety activities.

(6) A specific plan for making an impact on the curriculum taught by relevant medical specialties, including radiology, orthopedics, dermatology, internal medicine, neurology, perinatal medicine, and pathology.

(7) A description of its program to assist other institutions or agencies located within the applicant's region including schools of medicine, nursing and engineering, among others, by providing curriculum materials and consultation for curriculum/course development in occupational safety and health, and by providing training opportunities for faculty members.

(8) A specific plan for preparing, distributing, and conducting courses, seminars and workshops to provide short-term and continuing education training courses for physicians, nurses, industrial hygienists, safety engineers and other occupational safety and health professionals, paraprofessionals and technicians, including personnel of labor-management health and safety committees, in the geographical region in which the educational resource center is located. The content and orientation of the curriculum/courses shall take into consideration and address problems relevant to the geographic region served. The goal shall be that the training be made available each year to a minimum of 200–250 trainees representing all of the above categories of personnel with priority given to providing occupational safety and health training to physicians in family practice, as well as in industrial practice, and industrial nurses. These courses shall be structured so that educational institutions, public health and safety agencies, professional societies or other appropriate agencies can utilize them to provide training at the local level to occupational safety and health personnel working in the workplace. Further, the educational resource center shall have a specific plan and demonstrated capability for implementing such training directly and through other institutions or agencies in the region including cooperative efforts with labor unions and industry trade associations where appropriate.

[40 FR 29076, July 10, 1975, as amended at 42 FR 52401, Sept. 30, 1977]

§ 86.14 Evaluation and grant award.

Within the limits of funds available for such purpose the Secretary may award grants to assist in the establishment and operation of those projects which will in his judgment best promote the purposes of section 21(a)(1) of the Act, taking into account:

(a) In the case of long-term training grants:

(1) The need for training in the area or areas of study outlined in the application;

(2) The degree to which the proposal represents a strengthening or expansion of the applicant's program in such areas;

(3) The record of the applicant's effectiveness in training in these or related areas as indicated, among other things, by the placement of its graduates;

(4) The competence of the project staff in relation to the service to be provided;

(5) The reasonableness of the budget in relation to the proposed project;

(6) The applicant's resources, including equipment, facilities, and funds, available for the project;

(7) The current and potential availability of students in the area of study to be offered and their prospective employability as a result of the proposed training;

(8) The extent to which the applicant expects to absorb faculty positions initiated as a result of the grant; and

(9) The degree to which the project adequately provides for the requirements set forth in § 86.13(a).

(b) In the case of short-term training:

(1) The relationship of the contents of the course to the current and emergency training needs to carry out the purposes of the Act;

(2) The qualifications of the instructional staff;

(3) The speed with which the training can be put to use by the persons proposed to be trained;

(4) The reasonableness of the budget in relation to the proposed project;

(5) The success of previous offerings of this course, or related courses;

(6) Evidence of ability to recruit trainees and the estimated number to be enrolled during each course offering; and

(7) The degree to which the proposed project adequately provides for the requirements set forth in § 86.13(b).

(c) In the case of educational resource center grants:

(1) The criteria set forth in paragraphs (a) and (b) of this section.

(2) The degree to which the proposed project adequately provides for the requirements set forth in § 86.13(c).

(d) The amount of any award shall be determined by the Secretary on the basis of his estimate of the sum necessary for all or a designated portion of direct project costs plus an additional amount for indirect costs, if any, which will be calculated by the Secretary either (1) on the basis of his estimate of the actual indirect costs reasonably related to the project, or (2) on the basis of a percentage, not to exceed 8 percent, of all, or a portion of, the estimated direct costs of the project when there are reasonable assurances that the use of such percentage will not exceed the approximate actual indirect costs. Such award may include an estimated provisional amount for indirect costs or for designated direct costs (such as travel or supply costs) subject to upward (within the limits of available funds) as well as downward adjustments to actual costs when the amount properly expended by the grantee for provisional items has been determined by the Secretary.

(e) All grant awards shall be in writing, shall set forth the amount of funds granted and the period for which support is recommended.

(f) Neither the approval of any project nor any grant award shall commit or obligate the United States in any way to make any additional, supplemental, continuation, or other award with respect to any approved project or portion thereof. For continuation support, grantees must make separate application annually at such times and in such form as the Secretary may direct.

[40 FR 29076, July 10, 1975, as amended at 42 FR 52402, Sept. 30, 1977]

§ 86.15 Payments.

The Secretary shall from time to time make payments to a grantee of all or a portion of any grant award, either in advance or by way of reimbursement for expenses incurred or to be incurred in the performance of the project to the extent he determines such payments necessary to promote prompt initiation and advancement of the approved project.

§ 86.16 Use of project funds.

(a) Any funds granted pursuant to this subpart as well as other funds to be used in performance of the approved project shall be expended solely for carrying out the approved project in accordance with section 21(a) of the Act, the regulations of this subpart, the terms and conditions of the award, and the applicable cost principles prescribed by subpart Q of 45 CFR part 74.

(b) Prior written approval by the Secretary of revision of the budget and project plan is required whenever there is to be a significant change in the scope or nature of project activities, which in the case of short term training grants, includes any change in the course dates or training sites.

(c) Grant funds are available for trainee stipends and for tuition, including fees and instructional materials, for travel costs related to training allowances. Stipends and allowances may not be increased or be paid beyond the term of the stipend on account of vacation an individual might have been entitled to but did not take.

(d) Stipends may only be paid to a trainee who is a citizen of the United States, an alien lawfully admitted to the United States for permanent residence, or a permanent resident of Guam, American Samoa, or the Trust Territory of the Pacific Islands.

(e) In the case of short term training grants, stipends may not be paid to persons receiving lecture fees, salary, travel expenses, or payment in any form as members of the course instructional staff.

(f) Grant funds used for alterations and renovations shall be subject to the condition that the grantee shall comply with the requirements of Executive Order 11246, as amended, and with the applicable regulations prescribed pursuant thereto.

§ 86.17 Nondiscrimination.

(a) Attention is called to the requirements of title VI of the Civil Rights

Act of 1964 (78 Stat. 252, 42 U.S.C. 2000d *et seq.*) and in particular section 601 of such Act which provides that no person in the United States shall on the grounds of race, color, or national origin be excluded from participation in, be denied the benefits of, or be subjected to, discrimination under any program or activity receiving Federal financial assistance. A regulation implementing such title VI, which applies to grants made under this subpart, has been issued by the Secretary of Health and Human Services with the approval of the President (45 CFR part 80).

(b) Attention is called to the requirements of title IX of the Education Amendments of 1972 (86 Stat. 373, 20 U.S.C. 1681 *et seq.*) and in particular to section 901 of such Act which provides that no person in the United States shall, on the basis of sex, be excluded from participation in, be denied the benefits of, or be subjected to discrimination under any education program or activity receiving Federal financial assistance.

(c) Attention is called to the requirements of section 504 of the Rehabilitation Act of 1973, as amended, which provides that no otherwise qualified handicapped individual in the United States shall, solely by reason of his handicap, be excluded from participation in, be denied the benefits of, or be subjected to discrimination under any program or activity receiving Federal financial assistance.

§ 86.18 Grantee accountability.

(a) *Accounting for grant award payments.* All payments made by the Secretary shall be recorded by the grantee in accounting records separate from the records of all other grant funds, including funds derived from other grant awards. With respect to each approved project the grantee shall account for the sum total of all amounts paid by presenting or otherwise making available evidence satisfactory to the Secretary of expenditures for direct and indirect costs meeting the requirements of this part: *Provided, however,* That when the amount awarded for indirect costs was based on a predetermined fixed-percentage of estimated direct costs, the amount allowed for indirect costs shall be computed on the basis of such predetermined fixed-percentage rates applied to the total, or a selected element thereof, of the reimbursable direct costs incurred.

(b) *Accounting for interest earned on grant funds.* Pursuant to section 203 of the Intergovernmental Cooperation Act of 1968 (42 U.S.C. 4213), a State will not be held accountable for interest earned on grant funds, pending their disbursement for grant purposes. A State, as defined in section 102 of the Intergovernmental Cooperation Act, means any one of the several States, the District of Columbia, Puerto Rico, any territory or possession of the United States, or any agency or instrumentality of a State, but does not include the governments of the political sudivisions of the State. All grantees other than a State, as defined in this section, must return all interest earned on grant funds to the Federal Government.

(c) *Grant closeout*—(1) *Date of final accounting.* A grantee shall render, with respect to each approved project, a full account, as provided herein, as of the date of termination of grant support. The Secretary may require other special and periodic accounting.

(2) *Final settlement.* There shall be payable to the Federal Government as final settlement with respect to each approved project the total sum of:

(i) Any amount not accounted for pursuant to paragraph (a) of this section; and

(ii) Any credits for earned interest pursuant to paragraph (b) of this section; and

(iii) Any other amounts due pursuant to subparts F, M, and O of 45 CFR part 74.

Such total sum shall constitute a debt owed by the grantee to the Federal Government and shall be recovered from the grantee or its successors or assignees by setoff or other action as provided by law.

§ 86.19 Human subjects; animal welfare.

No grant award may be made under this subpart unless the applicant has complied with:

(a) 45 CFR part 46 pertaining to the protection of human subjects; and

(b) Chapter 1–43 of the Department Grants Administration Manual[2] concerning animal welfare.

§ 86.20 Additional conditions.

The Secretary may with respect to any grant award impose additional conditions prior to or at the time of any award when in his judgment such conditions are necessary to assure or protect advancement of the approved project, the interests of public health, or the conservation of grant funds.

§ 86.21 Applicability of 45 CFR part 74.

The provisions of 45 CFR part 74, establishing uniform administrative requirements and cost principles, shall apply to all grants under this part to States and local governments as those terms are defined in subpart A of that part 74. The relevant provisions of the following subparts of part 74 shall also apply to grants to all grantee organizations under this part:

45 CFR PART 74

Subpart and Subject
A General.
B Cash depositories.
C Bonding and insurance.
D Retention and custodial requirements for records.
F Grant-related income.
G Matching and cost sharing.
K Grant payment requirements.
L Budget revision procedures.
M Grant closeout: Suspension, and termination.
O Property.
Q Cost principles.

Subpart C—Occupational Safety and Health Direct Traineeships

§ 86.30 Nature and purpose of direct traineeships.

A direct traineeship is an award of funds directly from the Federal Government to an individual (herein called the ''trainee'') for his subsistence and other expenses during a period in which he is acquiring training (a) in the occupational safety and health professions, (b) for research relating to occupational safety and health, or (c) for teaching in occupational safety and health.

§ 86.31 Eligibility; minimum requirements.

In order to be eligible for an award under this subpart an applicant must:

(a) Have been accepted by a public or private institution for the purpose of the activity for which the traineeship is sought.

(b) Be a U.S. citizen, an alien lawfully admitted to the United States for permanent residence or a permanent resident of Guam, American Samoa, or the Trust Territory of the Pacific Islands.

[40 FR 29076, July 10, 1975, as amended at 47 FR 53012, Nov. 24, 1982]

§ 86.32 Application for direct traineeship.

An application for a direct traineeship under this subpart shall be submitted to the Secretary at such times and in such form and manner as he may prescribe.[1] In addition to the information supplied by the applicant in his application, such further information may be required as is necessary to determine his or her qualifications.

[40 FR 29076, July 10, 1975, as amended at 49 FR 38117, Sept. 27, 1984]

§ 86.33 Human subjects; animal welfare.

Where the application is for training at a non-Federal institution, no award may be made under this subpart unless said institution has complied with:

(a) 45 CFR part 46 pertaining to the protection of human subjects; and

(b) Chapter 1–43 of the Department Grants Administration Manual[2] 068 concerning animal welfare.

§ 86.34 Evaluation and award of direct traineeships.

Within the limits of funds available for such purpose and subject to the regulations of this part, the Secretary

[2] The Department Grants Administration Manual is available for inspection at the Public Information Office of the several Department Regional Offices and available for purchase at the Government Printing Office, GPO Document No. 894–523.

[1] Applications and instructions may be obtained from the Procurement and Grants Office, Centers for Disease Control, Atlanta, GA 30333.

[2] See footnote 2 to § 86.19.

may award direct traineeships to those qualified applicants who are in his judgment best able to carry out the purpose of the traineeships taking into consideration the need for training in the area of study specified in the application.

§ 86.35 Payments.

(a) Individuals receiving awards shall be entitled to such stipends and allowances as the Secretary may designate, taking into account such factors as the needs of the program, the cost of living, and the availability of funds.

(NOTE: These are prescribed in chapter 3–140 of the Department Grants Administration Manual[2]).

(b) Payments of stipends and allowances will, at the discretion of the Secretary, be made directly to the trainee or to the sponsoring institution for payment directly to the trainee.

§ 86.36 Duration and continuation.

Direct traineeship awards may be made for varying periods not in excess of 2 years. The Secretary may make one or more continuation awards for an additional period if he finds that satisfactory progress is being made toward accomplishment of the purpose of the initial traineeship award. Additional support may be provided on appropriate justification after expiration of the period of support in the previous award.

§ 86.37 Terms and conditions.

All direct traineeship awards shall be subject to the following terms and conditions:

(a) Training must be carried out at an institution found by the Secretary to provide a well-rounded course of instruction in the particular area of training for which the traineeship is awarded.

(b) No direct traineeship may be utilized to compensate any trainee for personal services or employment on behalf of the United States or any person.

§ 86.38 Accountability.

Accountability for payments will be subject to such requirements as may be specified by the Secretary.

§ 86.39 Termination of direct traineeship.

(a) The Secretary may terminate a direct traineeship at any time upon request of the trainee.

(b) After reasonable notice to the trainee and an opportunity for the presentation of the trainee's views and relevant evidence, the Secretary may terminate any direct traineeship prior to the date it would otherwise expire upon a determination that the trainee's performance is unsatisfactory, that the trainee is no longer attending the sponsoring institution, or that he or she is unfit or unable to carry out the purpose of the traineeship.

(c) The views and evidence of the trainee shall be presented in writing unless the Secretary determines that an oral presentation is desirable.

PART 87—NATIONAL INSTITUTE FOR OCCUPATIONAL SAFETY AND HEALTH RESEARCH AND DEMONSTRATION GRANTS

Sec.
87.1 To which programs does this regulation apply?
87.2 Definitions.
87.3 Who is eligible to apply for a grant under this part?
87.4 For what purposes may grants be awarded?
87.5 What information must be included in the grant application?
87.6 How will grant applications be evaluated and the grants awarded?
87.7 For what period of time will grants be awarded?
87.8 How may a grantee use grant funds?
87.9 Which other HHS regulations apply?

AUTHORITY: Sec. 8(g), 84 Stat. 1600 (29 U.S.C. 657(g)), sec. 508, 83 Stat. 803 (30 U.S.C. 957).

SOURCE: 46 FR 58676, Dec. 3, 1981, unless otherwise noted.

§ 87.1 To which programs does this regulation apply?

This regulation applies to research and demonstration project grants under:

(a) Section 20(a)(1) of the Occupational Safety and Health Act of 1970 (29 U.S.C. 669(a)(1)) for the support of studies related to occupational safety and health, and

(b) Section 501 of the Federal Mine Safety and Health Act of 1977 (30 U.S.C. 951) for the support of health research in mining. These grants are awarded and administered by the National Institute for Occupational Safety and Health, Centers for Disease Control, of the Public Health Service.

§ 87.2 Definitions.

As used in this regulation:

Demonstration project grant means an award of funds to an eligible applicant to assist in meeting the cost of conducting a demonstration, either on a pilot or full-scale basis, of the technical or economic feasibility or application of a new or improved procedure, method, technique, or approach that will further the research purposes described in § 87.4.

Principal investigator for a research project, or *project director* for a demonstration project, means a single individual who is responsible for the scientific and technical direction of the project.

Research project grant means an award of funds to an eligible applicant to assist in meeting the costs of conducting an identified research activity or program, study, or experiment that will further the research purposes described in § 87.4.

Secretary means the Secretary of Health and Human Services and any other officer or employee of the Department of Health and Human Services to whom the authority involved has been delegated.

§ 87.3 Who is eligible to apply for a grant under this part?

Any public or private agency or institution is eligible to apply for a grant under this part, except Federal agencies or institutions not specifically authorized by law to receive such a grant.

§ 87.4 For what purposes may grants be awarded?

(a) The Occupational Safety and Health Act authorizes grants for research, experiments, and demonstrations relating to occupational safety and health, including studies of the psychological factors involved. This authority includes projects to develop innovative methods, techniques, and approaches for dealing with occupational safety and health problems.

(b) The Federal Mine Safety and Health Act authorizes grants for research projects designed to:

(1) Improve working conditions and practices affecting health in coal or other mines and to prevent occupational diseases originating in the mining industry.

(2) Develop epidemiological information to (i) identify and define positive factors involved in occupational diseases of miners, (ii) provide information on the incidence and prevalence of pneumoconiosis and other respiratory ailments of miners, and (iii) improve health standards.

(3) Develop techniques for the prevention and control of occupational diseases of miners, including tests for hypersusceptibility and early detection.

(4) Evaluate the effect on bodily impairment and occupational disability of miners afflicted with an occupational disease.

(5) Study the relationship between coal or other mine environments and occupational diseases of miners.

(6) Study matters involving the protection of life and the prevention of diseases in connection with persons who, although not miners, work with or around the products of coal or other mines in areas outside of such mines and under conditions which may adversely affect the health and well-being of such persons.

(7) Develop effective respiratory equipment.

§ 87.5 What information must be included in the grant application?

The application must contain a complete description of the objective of the project and the plan for carrying out the research or demonstration, the name and qualifications of the principal investigator or project director and principal staff members, the total resources and facilities that will be available, and a justification of the amount of grant funds requested.

§ 87.6 How will grant applications be evaluated and the grants awarded?

(a) The Secretary may award grants to those applicants whose approved

projects will best promote the purposes of either the Occupational Safety and Health Act or the Federal Mine Safety and Health Act on the basis of an evaluation conducted by experts or consultants engaged for this purpose.

(b) This evaluation will take into account the scientific merit and significance of the project, the competency of the proposed staff in relation to the type of research or demonstration involved, the feasibility of the project, the likelihood of its producing meaningful results, the proposed project period, the adequacy of the applicant's resources available for the project, the amount of grant funds necessary for completion, and for mining grant applications, the recommendations of the Mine Health Research Advisory Committee.

(c) The Secretary may evaluate and approve two or more concurrent applications, each dealing with one or more specified aspects of the project, and make two or more concurrent grant awards for the project. This may be necessary when a project involves a number of different but related problems, activities, or disciplines which would require evaluation by different groups, or when support for a project could be more effectively administered by separate handling of various aspects of the project.

§ 87.7 For what period of time will grants be awarded?

(a) The notice of grant award specifies how long the Secretary intends to support the project without requiring the project to recompete for funds. This period, called the project period, will usually be for 3–5 years.

(b) Generally, the grant will initially be for 1 year and subsequent continuation awards will also be for 1 year at a time. A grantee must submit a separate application to have the support continued for each subsequent year. Decisions regarding continuation awards and the funding level of such awards will be of such factors as the grantee's progress and management practices, and the availability of funds. In all cases, continuation awards require a determination by the Secretary that continued funding is in the best interest of the Federal Government.

(c) Neither the approval of any application, nor the award of any grant commits or obligates the Federal Government in any way to make any additional, supplemental, continuation, or other award with respect to any approved application or portion of an approved application.

§ 87.8 How may a grantee use grant funds?

A grantee shall only spend funds it receives under this part according to the approved application and budget, the authorizing legislation, the terms and conditions of the grant award, the applicable cost principles specified in subpart Q of 45 CFR part 74, and the regulations of this part.

§ 87.9 Which other HHS regulations apply?

Several other regulations apply to grants under this part. These include, but are not limited to:

42 CFR part 50, subpart D—Public Health Service grant appeals procedure

45 CFR part 16—Procedures of the Departmental Grant Appeals Board

45 CFR part 46—Protection of human subjects

45 CFR part 74—Administration of grants

45 CFR part 75—Informal grant appeals procedures

45 CFR part 80—Nondiscrimination under programs receiving Federal assistance through the Department of Health and Human Services effectuation of title VI of the Civil Rights Act of 1964

45 CFR part 81—Practice and procedure for hearing under part 80 of this Title

45 CFR part 84—Nondiscrimination on the basis of handicap in programs and activities receiving or benefiting from Federal financial assistance

45 CFR part 91—Nondiscrimination on the basis of age in HHS programs or activities receiving Federal financial assistance

[49 FR 38117, Sept. 27, 1984]

SUBCHAPTER H—HEALTH ASSESSMENTS AND HEALTH EFFECTS STUDIES OF HAZARDOUS SUBSTANCES RELEASES AND FACILITIES

PART 90—ADMINISTRATIVE FUNCTIONS, PRACTICES, AND PROCEDURES

Sec.
90.1 Purpose and applicability.
90.2 Definitions.
90.3 Procedures for requesting health assessments.
90.4 Contents of requests for health assessments.
90.5 Acting on requests.
90.6 Notification of determination to conduct a health assessment in response to a request from the public.
90.7 Decision to conduct health effects study.
90.8 Conduct of health assessments and health effects studies.
90.9 Public health advisory.
90.10 Notice and comment period.
90.11 Reporting of results of health assessments and health effects studies.
90.12 Confidentiality of information.
90.13 Recordkeeping requirements.
90.14 Documentation and cost recovery.

AUTHORITY: 42 U.S.C. 9615; 42 U.S.C. 6939a(c).

SOURCE: 55 FR 5138, Feb. 13, 1990, unless otherwise noted.

§ 90.1 Purpose and applicability.

The provisions of this part set forth the policies and procedures of the Agency for Toxic Substances and Disease Registry (ATSDR) with respect to its conduct of health assessments and health effects studies under section 104(i) of Comprehensive Environmental Response, Compensation, and Liability Act, as amended by the Superfund Amendments and Reauthorization Act of 1986, and section 3019 of the Resource Conservation and Recovery Act. These provisions apply to ATSDR, as well as its contractors, agents, and those carrying out health assessments and health effects studies pursuant to agreements with ATSDR, such as other Federal agencies and States.

§ 90.2 Definitions.

Administrator means the Administrator of the Agency for Toxic Substances and Disease Registry or designee.

ATSDR means the Agency for Toxic Substances and Disease Registry, Public Health Service, U.S. Department of Health and Human Services.

CERCLA means the Comprehensive Environmental Response, Compensation, and Liability Act of 1980 (42 U.S.C. 9601 *et seq.*, Pub. L. 96–520), as amended by the Superfund Amendments and Reauthorization Act of 1986 (Pub. L. 99–499).

EPA means the U.S. Environmental Protection Agency.

Facility is defined in 42 U.S.C. 9601(9).

Hazardous substance is defined in 42 U.S.C. 9601(14). In addition, the term includes any pollutant or contaminant which the Administrator determines is appropriate for the purposes of carrying out his or her responsibilities under CERCLA.

Health assessment means the evaluation of data and information on the release of hazardous substances into the environment in order to assess any current or future impact on public health, develop health advisories or other recommendations, and identify studies or actions needed to evaluate and mitigate or prevent human health effects.

Health effects study means research, investigation, or study performed by ATSDR or other parties pursuant to an agreement with ATSDR to evaluate the health effects of exposure to hazardous substances at specific sites. This term includes, but is not limited to, epidemiological studies, exposure and disease registries, and health surveillance programs. This term does not include health assessments.

Owner or operator is defined in 42 U.S.C. 9601(20).

Peer review means review for scientific quality by a panel consisting of no less than three nor more than seven members, who shall be disinterested scientific experts selected by the Administrator of ATSDR on the basis of their reputation for scientific objectivity and the lack of institutional ties

with any person involved in the conduct of the study or research under review.

Person means an individual, firm, corporation, association, partnership, consortium, joint venture, commercial entity, United States Government, State, municipality, commission, political subdivision of a State, Indian tribe, or any interstate body.

Pollutant or contaminant is defined in 42 U.S.C. 9601(33).

Public health advisory is a statement by ATSDR containing a finding that a release poses a significant risk to human health and recommending measures to be taken to reduce exposure and eliminate or substantially mitigate the significant risk to human health.

Release is defined in 42 U.S.C. 9601(22).

§ 90.3 Procedures for requesting health assessments.

(a) ATSDR will accept requests to perform health assessments for a particular facility or release from any person or group of persons.

(b) All requests to ATSDR to perform health assessments should be addressed to: Assistant Administrator, Agency for Toxic Substances and Disease Registry, 1600 Clifton Road NE., Atlanta, GA 30333.

§ 90.4 Contents of requests for health assessments.

(a) Each request for a health assessment shall contain:

(1) The name, address (including zip code), and telephone number of the requestor;

(2) The organization or group the requestor represents, if any;

(3) The name, location, and description of the facility or release of concern;

(4) A statement providing information that individuals have been exposed to a hazardous substance and that the probable source is a release, or sufficient information to allow the Administrator to make such a finding;

(5) A statement requesting ATSDR to perform a health assessment.

(b) At his or her discretion, consistent with the requirements of CERCLA, the Administrator may decide not to require the preceding information be submitted with a request for a health assessment.

(c) Each request for a health assessment should include, where possible:

(1) Any other information pertaining to the facility or release, such as the nature and amount of the hazardous substances of concern or the identities of parties believed to be potentially responsible for the release;

(2) Potential pathways for human exposure, including a description of the media contaminated (e.g. soil, groundwater, air, etc.);

(3) The demographic nature and proximity of the potentially affected human population; and

(4) Other Federal, State, or local governmental agencies which were notified or that investigated the facility or release.

(d) This data collection has been reviewed and approved by OMB in accordance with the Paperwork Reduction Act and assigned the control number 0920–0204.

§ 90.5 Acting on requests.

(a) Upon receipt of a request for a health assessment submitted under this part, ATSDR will determine, in its discretion, whether or not there is a reasonable basis to justify conducting a health assessment. ATSDR will base this determination on, among other factors:

(1) Whether individuals have been exposed to a hazardous substance, for which the probable source of such exposure is a release;

(2) The location, concentration, and toxicity of the hazardous substances;

(3) The potential for further human exposure;

(4) The recommendations of other governmental agencies; and

(5) The ATSDR resources available and other ATSDR priorities, such as its responsibilities to conduct other health assessments and health effects studies.

(b) Where appropriate, ATSDR will request information from other Federal, State, and local governmental agencies, as well as other persons, pertaining to a facility or release which is the subject of a request from the public to ATSDR to conduct a health assessment.

(c) The requestor will be notified in writing of ATSDR's determination that either a health assessment will be performed, a health assessment will not be performed, or that further information concerning the facility or release is required before a decision can be made whether a health assessment will be performed.

(d) If a health assessment is not initiated in response to a request from the public, ATSDR shall provide a written explanation to the requestor of why a health assessment is not appropriate.

§ 90.6 Notification of determination to conduct a health assessment in response to a request from the public.

(a) Following a determination by ATSDR to conduct a health assessment in response to a request from the public, ATSDR shall notify in writing, at a minimum, the following parties of its intent to perform a health assessment:

(1) The U.S. Environmental Protection Agency;

(2) The appropriate State government environmental agency;

(3) The appropriate State and local health departments;

(4) The requestor;

(5) The owner or operator of the facility of concern, if their identity is readily available to ATSDR.

In addition, ATSDR will notify, in writing or by telephone, other potentially responsible parties, if their identity is readily available to ATSDR.

(b) At its discretion, ATSDR may notify any other persons which it feels may be affected by the release or have information pertaining to the release.

§ 90.7 Decision to conduct health effects study.

(a) ATSDR may decide, in its discretion, based upon the results of a health assessment or other available information, to conduct a health effects study for a particular site or sites. Such a decision may, in appropriate circumstances, be made prior to the completion of a health assessment for a site or sites. When deciding whether to conduct a health effects study, ATSDR will consider such factors as the results and recommendations of a health assessment for the site or sites and the need for additional information to determine whether individuals have been exposed to hazardous substances, the degree to which such exposure has occurred, and any possible health effects resulting from such exposure.

(b) Should ATSDR decide, in its discretion, to conduct a health effect study, it will notify the parties as specified in § 90.6.

§ 90.8 Conduct of health assessments and health effects studies.

(a) Any interested person or persons may submit data or information to ATSDR for it to consider in its conduct of a health assessment or a health effects study. In performing a health assessment or a health effects study, ATSDR will consider data and information it has independently generated or received from other parties, such as EPA, other Federal agencies, State and local governmental agencies, businesses, citizen organizations, and community groups.

(b) ATSDR may determine it is necessary to conduct a site visit in connection with a health assessment or health effects study. The ATSDR representative may allow the participation of any person in the site visit which he or she, at his or her discretion, determines will aid in the conduct of the health assessment or health effects study.

(c) In the event that the information necessary to perform a health assessment or health effects study is not readily available from other sources, ATSDR may arrange for sampling or additional data gathering at a facility or release for the limited purpose of determining the existence of current or potential health problems.

§ 90.9 Public health advisory.

ATSDR may issue a public health advisory based on the findings of a health assessment, health effects, study, or other ATSDR involvement.

§ 90.10 Notice and comment period.

Following internal review by ATSDR and external peer review of a draft final report of the results of a health effects study, ATSDR will publish a notice that the draft final report is available for public review and comment. At

a minimum, the notice shall be published in at least one newspaper of general distribution in the local where the site is located. The notice shall describe how copies of the draft final report of the health effects study can be obtained and set a reasonable time period for interested persons to submit comments concerning the study. ATSDR may, at its discretion, respond in writing to comments it receives.

§ 90.11 Reporting of results of health assessments and health effects studies.

(a) ATSDR shall provide a report of the results of a health assessment or health effects study to EPA, the appropriate State and local governmental agencies, any person requesting ATSDR to conduct the health assessment, and parties potentially responsible for the release, if their identity is readily available to ATSDR. In addition, such reports shall be available to the general public upon request.

(b) In the event that ATSDR or its representatives conduct medical examinations of individuals in the course of a health effects study and the examination reveals a positive significant medical finding, the individual, and a physician if designated by the individual, will be promptly notified of that significant medical finding by ATSDR.

(c) A summary of the findings of all medical examinations for each individual will be sent by ATSDR to that individual.

(d) All studies and results of research conducted under this part (other than health assessments) shall be reported or adopted only after appropriate peer review.

§ 90.12 Confidentiality of information.

(a) ATSDR shall consider any medical information in individually identifiable form to be confidential information and shall release such information only in accordance with the Privacy Act (5 U.S.C. 552a) or other applicable Federal law.

(b) As provided under section 104(e)(7) of CERCLA, any records, reports, or information obtained from any person under this section shall be available to the public, except that upon a showing satisfactory to ATSDR by any person that records, reports, or information, or particular part thereof (other than health or safety effects data), to which any officer, employee, or representative of ATSDR has access under this part if made public would divulge information entitled to protection under the Trade Secrets Act (18 U.S.C. 1905), such information or particular portion thereof shall be considered confidential in accordance with the purposes of that section, except that such record, report, document, or information may be disclosed to other officers, employees, or authorized representatives of the United States concerned with carrying out statutorily mandated duties.

(c) In submitting data to ATSDR, a person may designate the data which such person believes is entitled to protection under paragraph (b) of this section and submit such designated data separately from other data submitted under this part. A designation under this paragraph shall be made in writing to the Administrator. However, should ATSDR at any time question such designation, not less than 15 days notice to the person sumitting the information shall be given of the intention to remove such trade secret designation from such information. The person may submit a request to the Administrator to reconsider this intention and may provide additional information in support of the trade secret designation. The Administrator shall notify the person in writing of the decision which will become effective no sooner than 15 days after the date of such notice.

§ 90.13 Recordkeeping requirements.

(a) ATSDR shall maintain a record of all health assessments and health effects studies. The Administrator shall, at his or her discretion, determine the contents of the record. At a minimum, the record shall include:

(1) The final ATSDR report of the health assessment or health effects study;

(2) Nonconfidential data and other information upon which that report is based or which was considered by ATSDR;

(3) Nonconfidential data or other information submitted by interested persons pertaining to the health assessment or health effects study;

(4) The protocol for the health effects study;

(5) A list of the individuals responsible for external peer review of the report of a health effects study, their comments, and ATSDR's response to the comments; and

(6) For health effects study, the notice announcing the availability of a draft final report for public review and comment, all comments received in response to the notice, and any responses to the comments by ATSDR.

(b) The record may contain a confidential portion which shall include all information determined to be confidential by the Administrator under this part.

(c) The Administrator may determine other documents are appropriate for inclusion in the record for health assessments or health effects studies.

(d) Predecisional documents, including draft documents, are not documents upon which ATSDR bases its conclusions in health assessments or health effects studies, and are not usually included in the record for health assessments or health effects studies.

(e) The record for ATSDR health assessments and health effects studies will be available for review, upon prior request, at ATSDR headquarters in Atlanta, Georgia.

(f) Nothing in this section is intended to imply that ATSDR's decisions to conduct health assessments or health effects studies, or the reports of health assessments or health effects studies, are subject to judicial review.

§ 90.14 Documentation and cost recovery.

(a) During all phases of ATSDR health assessments and health effects studies, documentation shall be completed and maintained to form the basis for cost recovery, as specified in section 107 of CERCLA.

(b) Where appropriate, the information and reports compiled by ATSDR pertaining to costs shall be forwarded to the appropriate EPA regional office for cost recovery purposes.

PART 93—PUBLIC HEALTH SERVICE POLICIES ON RESEARCH MISCONDUCT

Sec.
93.25 Organization of this part.
93.50 Special terms.

Subpart A—General

93.100 General policy.
93.101 Purpose.
93.102 Applicability.
93.103 Research misconduct.
93.104 Requirements for findings of research misconduct.
93.105 Time limitations.
93.106 Evidentiary standards.
93.107 Rule of interpretation.
93.108 Confidentiality.
93.109 Coordination with other agencies.

Subpart B—Definitions

93.200 Administrative action.
93.201 Allegation.
93.202 Charge letter.
93.203 Complainant.
93.204 Contract.
93.205 Debarment or suspension.
93.206 Debarring official.
93.207 Departmental Appeals Board or DAB.
93.208 Evidence.
93.209 Funding component.
93.210 Good faith.
93.211 Hearing.
93.212 Inquiry.
93.213 Institution.
93.214 Institutional member
93.215 Investigation.
93.216 Notice.
93.217 Office of Research Integrity or ORI.
93.218 Person.
93.219 Preponderance of the evidence.
93.220 Public Health Service or PHS.
93.221 PHS support.
93.222 Research.
93.223 Research misconduct proceeding.
93.224 Research record.
93.225 Respondent.
93.226 Retaliation.
93.227 Secretary or HHS.

Subpart C—Responsibilities of Institutions

COMPLIANCE AND ASSURANCES

93.300 General responsibilities for compliance.
93.301 Institutional assurances.
93.302 Institutional compliance with assurances.
93.303 Assurances for small institutions.
93.304 Institutional policies and procedures.
93.305 Responsibility for maintenance and custody of research records and evidence.

93.306 Using a consortium or person for research misconduct proceedings.

THE INSTITUTIONAL INQUIRY

93.307 Institutional inquiry.
93.308 Notice of the results of the inquiry.
93.309 Reporting to ORI on the decision to initiate an investigation.

THE INSTITUTIONAL INVESTIGATION

93.310 Institutional investigation.
93.311 Investigation time limits.
93.312 Opportunity to comment on the investigation report.
93.313 Institutional investigation report.
93.314 Institutional appeals.
93.315 Notice to ORI of institutional findings and actions.
93.316 Completing the research misconduct process.

OTHER INSTITUTIONAL RESPONSIBILITIES

93.317 Retention and custody of the research misconduct proceeding record.
93.318 Notifying ORI of special circumstances.
93.319 Institutional standards.

Subpart D—Responsibilities of the U.S. Department of Health and Human Services

GENERAL INFORMATION

93.400 General statement of ORI authority.
93.401 Interaction with other offices and interim actions.

RESEARCH MISCONDUCT ISSUES

93.402 ORI allegation assessments.
93.403 ORI review of research misconduct proceedings.
93.404 Findings of research misconduct and proposed administrative actions.
93.405 Notifying the respondent of findings of research misconduct and HHS administrative actions.
93.406 Final HHS actions.
93.407 HHS administrative actions.
93.408 Mitigating and aggravating factors in HHS administrative actions.
93.409 Settlement of research misconduct proceedings.
93.410 Final HHS action with no settlement or finding of research misconduct.
93.411 Final HHS action with a settlement or finding of misconduct.

INSTITUTIONAL COMPLIANCE ISSUES

93.412 Making decisions on institutional noncompliance.
93.413 HHS compliance actions.

DISCLOSURE OF INFORMATION

93.414 Notice.

Subpart E—Opportunity To Contest ORI Findings of Research Misconduct and HHS Administrative Actions

GENERAL INFORMATION

93.500 General policy.
93.501 Opportunity to contest findings of research misconduct and administrative actions.

HEARING PROCESS

93.502 Appointment of the Administrative Law Judge and scientific expert.
93.503 Grounds for granting a hearing request.
93.504 Grounds for dismissal of a hearing request.
93.505 Rights of the parties.
93.506 Authority of the Administrative Law Judge.
93.507 Ex parte communications.
93.508 Filing, forms, and service.
93.509 Computation of time.
93.510 Filing motions.
93.511 Prehearing conferences.
93.512 Discovery.
93.513 Submission of witness lists, witness statements, and exhibits.
93.514 Amendment to the charge letter.
93.515 Actions for violating an order or for disruptive conduct.
93.516 Standard and burden of proof.
93.517 The hearing.
93.518 Witnesses.
93.519 Admissibility of evidence.
93.520 The record.
93.521 Correction of the transcript.
93.522 Filing post-hearing briefs.
93.523 The Administrative Law Judge's ruling.

AUTHORITY: 42 U.S.C. 216, 241, and 289b.

SOURCE: 70 FR 28384, May 17, 2005, unless otherwise noted.

§ 93.25 Organization of this part.

This part is subdivided into five subparts. Each subpart contains information related to a broad topic or specific audience with special responsibilities as shown in the following table.

In subpart . . .	You will find provisions related to . . .
A	General information about this rule.
B	Definitions of terms used in this part.
C	Responsibilities of institutions with PHS support.
D	Responsibilities of the U.S. Department of Health and Human Services and the Office of Research Integrity.

In subpart . . .	You will find provisions related to . . .
E	Information on how to contest ORI research misconduct findings and HHS administrative actions.

§ 93.50 Special terms.

This part uses terms throughout the text that have special meaning. Those terms are defined in Subpart B of this part.

Subpart A—General

§ 93.100 General policy.

(a) Research misconduct involving PHS support is contrary to the interests of the PHS and the Federal government and to the health and safety of the public, to the integrity of research, and to the conservation of public funds.

(b) The U.S. Department of Health and Human Services (HHS) and institutions that apply for or receive Public Health Service (PHS) support for biomedical or behavioral research, biomedical or behavioral research training, or activities related to that research or research training share responsibility for the integrity of the research process. HHS has ultimate oversight authority for PHS supported research, and for taking other actions as appropriate or necessary, including the right to assess allegations and perform inquiries or investigations at any time. Institutions and institutional members have an affirmative duty to protect PHS funds from misuse by ensuring the integrity of all PHS supported work, and primary responsibility for responding to and reporting allegations of research misconduct, as provided in this part.

§ 93.101 Purpose.

The purpose of this part is to—

(a) Establish the responsibilities of HHS, PHS, the Office of Research Integrity (ORI), and institutions in responding to research misconduct issues;

(b) Define what constitutes misconduct in PHS supported research;

(c) Define the general types of administrative actions HHS and the PHS may take in response to research misconduct; and

(d) Require institutions to develop and implement policies and procedures for—

(1) Reporting and responding to allegations of research misconduct covered by this part;

(2) Providing HHS with the assurances necessary to permit the institutions to participate in PHS supported research.

(e) Protect the health and safety of the public, promote the integrity of PHS supported research and the research process, and conserve public funds.

§ 93.102 Applicability.

(a) Each institution that applies for or receives PHS support for biomedical or behavioral research, research training or activities related to that research or research training must comply with this part.

(b)(1) This part applies to allegations of research misconduct and research misconduct involving:

(i) Applications or proposals for PHS support for biomedical or behavioral extramural or intramural research, research training or activities related to that research or research training, such as the operation of tissue and data banks and the dissemination of research information;

(ii) PHS supported biomedical or behavioral extramural or intramural research;

(iii) PHS supported biomedical or behavioral extramural or intramural research training programs;

(iv) PHS supported extramural or intramural activities that are related to biomedical or behavioral research or research training, such as the operation of tissue and data banks or the dissemination of research information; and

(v) Plagiarism of research records produced in the course of PHS supported research, research training or activities related to that research or research training.

(2) This includes any research proposed, performed, reviewed, or reported, or any research record generated from that research, regardless of whether an application or proposal for

PHS funds resulted in a grant, contract, cooperative agreement, or other form of PHS support.

(c) This part does not supersede or establish an alternative to any existing regulations or procedures for handling fiscal improprieties, the ethical treatment of human or animal subjects, criminal matters, personnel actions against Federal employees, or actions taken under the HHS debarment and suspension regulations at 45 CFR part 76 and 48 CFR subparts 9.4 and 309.4.

(d) This part does not prohibit or otherwise limit how institutions handle allegations of misconduct that do not fall within this part's definition of research misconduct or that do not involve PHS support.

§ 93.103 Research misconduct.

Research misconduct means fabrication, falsification, or plagiarism in proposing, performing, or reviewing research, or in reporting research results.

(a) Fabrication is making up data or results and recording or reporting them.

(b) Falsification is manipulating research materials, equipment, or processes, or changing or omitting data or results such that the research is not accurately represented in the research record.

(c) Plagiarism is the appropriation of another person's ideas, processes, results, or words without giving appropriate credit.

(d) Research misconduct does not include honest error or differences of opinion.

§ 93.104 Requirements for findings of research misconduct.

A finding of research misconduct made under this part requires that—

(a) There be a significant departure from accepted practices of the relevant research community; and

(b) The misconduct be committed intentionally, knowingly, or recklessly; and

(c) The allegation be proven by a preponderance of the evidence.

§ 93.105 Time limitations.

(a) *Six-year limitation.* This part applies only to research misconduct occurring within six years of the date HHS or an institution receives an allegation of research misconduct.

(b) *Exceptions to the six-year limitation.* Paragraph (a) of this section does not apply in the following instances:

(1) *Subsequent use exception.* The respondent continues or renews any incident of alleged research misconduct that occurred before the six-year limitation through the citation, republication or other use for the potential benefit of the respondent of the research record that is alleged to have been fabricated, falsified, or plagiarized.

(2) *Health or safety of the public exception.* If ORI or the institution, following consultation with ORI, determines that the alleged misconduct, if it occurred, would possibly have a substantial adverse effect on the health or safety of the public.

(3) *''Grandfather'' exception.* If HHS or an institution received the allegation of research misconduct before the effective date of this part.

§ 93.106 Evidentiary standards.

The following evidentiary standards apply to findings made under this part.

(a) *Standard of proof.* An institutional or HHS finding of research misconduct must be proved by a preponderance of the evidence.

(b) *Burden of proof.* (1) The institution or HHS has the burden of proof for making a finding of research misconduct. The destruction, absence of, or respondent's failure to provide research records adequately documenting the questioned research is evidence of research misconduct where the institution or HHS establishes by a preponderance of the evidence that the respondent intentionally, knowingly, or recklessly had research records and destroyed them, had the opportunity to maintain the records but did not do so, or maintained the records and failed to produce them in a timely manner and that the respondent's conduct constitutes a significant departure from accepted practices of the relevant research community.

(2) The respondent has the burden of going forward with and the burden of proving, by a preponderance of the evidence, any and all affirmative defenses raised. In determining whether HHS or the institution has carried the burden

of proof imposed by this part, the finder of fact shall give due consideration to admissible, credible evidence of honest error or difference of opinion presented by the respondent.

(3) The respondent has the burden of going forward with and proving by a preponderance of the evidence any mitigating factors that are relevant to a decision to impose administrative actions following a research misconduct proceeding.

§ 93.107 Rule of interpretation.

Any interpretation of this part must further the policy and purpose of the HHS and the Federal government to protect the health and safety of the public, to promote the integrity of research, and to conserve public funds.

§ 93.108 Confidentiality.

(a) Disclosure of the identity of respondents and complainants in research misconduct proceedings is limited, to the extent possible, to those who need to know, consistent with a thorough, competent, objective and fair research misconduct proceeding, and as allowed by law. Provided, however, that:

(1) The institution must disclose the identity of respondents and complainants to ORI pursuant to an ORI review of research misconduct proceedings under § 93.403.

(2) Under § 93.517(g), HHS administrative hearings must be open to the public.

(b) Except as may otherwise be prescribed by applicable law, confidentiality must be maintained for any records or evidence from which research subjects might be identified. Disclosure is limited to those who have a need to know to carry out a research misconduct proceeding.

§ 93.109 Coordination with other agencies.

(a) When more than one agency of the Federal government has jurisdiction of the subject misconduct allegation, HHS will cooperate in designating a lead agency to coordinate the response of the agencies to the allegation. Where HHS is not the lead agency, it may, in consultation with the lead agency, take appropriate action to protect the health and safety of the public, promote the integrity of the PHS supported research and research process and conserve public funds.

(b) In cases involving more than one agency, HHS may refer to evidence or reports developed by that agency if HHS determines that the evidence or reports will assist in resolving HHS issues. In appropriate cases, HHS will seek to resolve allegations jointly with the other agency or agencies.

Subpart B—Definitions

§ 93.200 Administrative action.

Administrative action means—

(a) An HHS action in response to a research misconduct proceeding taken to protect the health and safety of the public, to promote the integrity of PHS supported biomedical or behavioral research, research training, or activities related to that research or research training and to conserve public funds; or

(b) An HHS action in response either to a breach of a material provision of a settlement agreement in a research misconduct proceeding or to a breach of any HHS debarment or suspension.

§ 93.201 Allegation.

Allegation means a disclosure of possible research misconduct through any means of communication. The disclosure may be by written or oral statement or other communication to an institutional or HHS official.

§ 93.202 Charge letter.

Charge letter means the written notice, as well as any amendments to the notice, that are sent to the respondent stating the findings of research misconduct and any HHS administrative actions. If the charge letter includes a debarment or suspension action, it may be issued jointly by the ORI and the debarring official.

§ 93.203 Complainant.

Complainant means a person who in good faith makes an allegation of research misconduct.

§ 93.204 Contract.

Contract means an acquisition instrument awarded under the HHS Federal Acquisition Regulation (FAR), 48 CFR Chapter 1, excluding any small purchases awarded pursuant to FAR Part 13.

§ 93.205 Debarment or suspension.

Debarment or *suspension* means the Government wide exclusion, whether temporary or for a set term, of a person from eligibility for Federal grants, contracts, and cooperative agreements under the HHS regulations at 45 CFR part 76 (nonprocurement) and 48 CFR subparts 9.4 and 309.4 (procurement).

§ 93.206 Debarring official.

Debarring official means an official authorized to impose debarment or suspension. The HHS debarring official is either—

(a) The Secretary; or

(b) An official designated by the Secretary.

§ 93.207 Departmental Appeals Board or DAB.

Departmental Appeals Board or *DAB* means, depending on the context—

(a) The organization, within the Office of the Secretary, established to conduct hearings and provide impartial review of disputed decisions made by HHS operating components; or

(b) An Administrative Law Judge (ALJ) at the DAB.

§ 93.208 Evidence.

Evidence means any document, tangible item, or testimony offered or obtained during a research misconduct proceeding that tends to prove or disprove the existence of an alleged fact.

§ 93.209 Funding component.

Funding component means any organizational unit of the PHS authorized to award grants, contracts, or cooperative agreements for any activity that involves the conduct of biomedical or behavioral research, research training or activities related to that research or research training, e.g., agencies, bureaus, centers, institutes, divisions, or offices and other awarding units within the PHS.

§ 93.210 Good faith.

Good faith as applied to a complainant or witness, means having a belief in the truth of one's allegation or testimony that a reasonable person in the complainant's or witness's position could have based on the information known to the complainant or witness at the time. An allegation or cooperation with a research misconduct proceeding is not in good faith if made with knowing or reckless disregard for information that would negate the allegation or testimony. Good faith as applied to a committee member means cooperating with the research misconduct proceeding by carrying out the duties assigned impartially for the purpose of helping an institution meet its responsibilities under this part. A committee member does not act in good faith if his/her acts or omissions on the committee are dishonest or influenced by personal, professional, or financial conflicts of interest with those involved in the research misconduct proceeding.

§ 93.211 Hearing.

Hearing means that part of the research misconduct proceeding from the time a respondent files a request for an administrative hearing to contest ORI findings of research misconduct and HHS administrative actions until the time the ALJ issues a recommended decision.

§ 93.212 Inquiry.

Inquiry means preliminary information-gathering and preliminary fact-finding that meets the criteria and follows the procedures of §§ 93.307–93.309.

§ 93.213 Institution.

Institution means any individual or person that applies for or receives PHS support for any activity or program that involves the conduct of biomedical or behavioral research, biomedical or behavioral research training, or activities related to that research or training. This includes, but is not limited to colleges and universities, PHS intramural biomedical or

behavioral research laboratories, research and development centers, national user facilities, industrial laboratories or other research institutes, small research institutions, and independent researchers.

§ 93.214 Institutional member.

Institutional member or *members* means a person who is employed by, is an agent of, or is affiliated by contract or agreement with an institution. Institutional members may include, but are not limited to, officials, tenured and untenured faculty, teaching and support staff, researchers, research coordinators, clinical technicians, postdoctoral and other fellows, students, volunteers, agents, and contractors, subcontractors, and subawardees, and their employees.

§ 93.215 Investigation.

Investigation means the formal development of a factual record and the examination of that record leading to a decision not to make a finding of research misconduct or to a recommendation for a finding of research misconduct which may include a recommendation for other appropriate actions, including administrative actions.

§ 93.216 Notice.

Notice means a written communication served in person, sent by mail or its equivalent to the last known street address, facsimile number or e-mail address of the addressee. Several sections of Subpart E of this part have special notice requirements.

§ 93.217 Office of Research Integrity or ORI.

Office of Research Integrity or *ORI* means the office to which the HHS Secretary has delegated responsibility for addressing research integrity and misconduct issues related to PHS supported activities.

§ 93.218 Person.

Person means any individual, corporation, partnership, institution, association, unit of government, or legal entity, however organized.

§ 93.219 Preponderance of the evidence.

Preponderance of the evidence means proof by information that, compared with that opposing it, leads to the conclusion that the fact at issue is more probably true than not.

§ 93.220 Public Health Service or PHS.

Public Health Service or *PHS* means the unit within the Department of Health and Human Services that includes the Office of Public Health and Science and the following Operating Divisions: Agency for Healthcare Research and Quality, Agency for Toxic Substances and Disease Registry, Centers for Disease Control and Prevention, Food and Drug Administration, Health Resources and Services Administration, Indian Health Service, National Institutes of Health, and the Substance Abuse and Mental Health Services Administration, and the offices of the Regional Health Administrators.

§ 93.221 PHS support.

PHS support means PHS funding, or applications or proposals therefor, for biomedical or behavioral research, biomedical or behavioral research training, or activities related to that research or training, that may be provided through: Funding for PHS intramural research; PHS grants, cooperative agreements, or contracts or subgrants or subcontracts under those PHS funding instruments; or salary or other payments under PHS grants, cooperative agreements or contracts.

§ 93.222 Research.

Research means a systematic experiment, study, evaluation, demonstration or survey designed to develop or contribute to general knowledge (basic research) or specific knowledge (applied research) relating broadly to public health by establishing, discovering, developing, elucidating or confirming information about, or the underlying mechanism relating to, biological causes, functions or effects, diseases, treatments, or related matters to be studied.

§ 93.223 Research misconduct proceeding.

Research misconduct proceeding means any actions related to alleged research misconduct taken under this part, including but not limited to, allegation assessments, inquiries, investigations, ORI oversight reviews, hearings, and administrative appeals.

§ 93.224 Research record.

Research record means the record of data or results that embody the facts resulting from scientific inquiry, including but not limited to, research proposals, laboratory records, both physical and electronic, progress reports, abstracts, theses, oral presentations, internal reports, journal articles, and any documents and materials provided to HHS or an institutional official by a respondent in the course of the research misconduct proceeding.

§ 93.225 Respondent.

Respondent means the person against whom an allegation of research misconduct is directed or who is the subject of a research misconduct proceeding.

§ 93.226 Retaliation.

Retaliation for the purpose of this part means an adverse action taken against a complainant, witness, or committee member by an institution or one of its members in response to—

(a) A good faith allegation of research misconduct; or

(b) Good faith cooperation with a research misconduct proceeding.

§ 93.227 Secretary or HHS.

Secretary or *HHS* means the Secretary of HHS or any other officer or employee of the HHS to whom the Secretary delegates authority.

Subpart C—Responsibilities of Institutions

COMPLIANCE AND ASSURANCES

§ 93.300 General responsibilities for compliance.

Institutions under this part must—

(a) Have written policies and procedures for addressing allegations of research misconduct that meet the requirements of this part;

(b) Respond to each allegation of research misconduct for which the institution is responsible under this part in a thorough, competent, objective and fair manner, including precautions to ensure that individuals responsible for carrying out any part of the research misconduct proceeding do not have unresolved personal, professional or financial conflicts of interest with the complainant, respondent or witnesses;

(c) Foster a research environment that promotes the responsible conduct of research, research training, and activities related to that research or research training, discourages research misconduct, and deals promptly with allegations or evidence of possible research misconduct;

(d) Take all reasonable and practical steps to protect the positions and reputations of good faith complainants, witnesses and committee members and protect them from retaliation by respondents and other institutional members;

(e) Provide confidentiality to the extent required by § 93.108 to all respondents, complainants, and research subjects identifiable from research records or evidence;

(f) Take all reasonable and practical steps to ensure the cooperation of respondents and other institutional members with research misconduct proceedings, including, but not limited to, their providing information, research records, and evidence;

(g) Cooperate with HHS during any research misconduct proceeding or compliance review;

(h) Assist in administering and enforcing any HHS administrative actions imposed on its institutional members; and

(i) Have an active assurance of compliance.

§ 93.301 Institutional assurances.

(a) *General policy.* An institution with PHS supported biomedical or behavioral research, research training or activities related to that research or research training must provide PHS with an assurance of compliance with this part, satisfactory to the Secretary.

PHS funding components may authorize funds for biomedical and behavioral research, research training, or activities related to that research or research training only to institutions that have approved assurances and required renewals on file with ORI.

(b) *Institutional Assurance.* The responsible institutional official must assure on behalf of the institution that the institution—

(1) Has written policies and procedures in compliance with this part for inquiring into and investigating allegations of research misconduct; and

(2) Complies with its own policies and procedures and the requirements of this part.

§ 93.302 Institutional compliance with assurances.

(a) *Compliance with assurance.* ORI considers an institution in compliance with its assurance if the institution—

(1) Establishes policies and procedures according to this part, keeps them in compliance with this part, and upon request, provides them to ORI, other HHS personnel, and members of the public;

(2) Takes all reasonable and practical specific steps to foster research integrity consistent with § 93.300, including—

(i) Informs the institution's research members participating in or otherwise involved with PHS supported biomedical or behavioral research, research training or activities related to that research or research training, including those applying for support from any PHS funding component, about its policies and procedures for responding to allegations of research misconduct, and the institution's commitment to compliance with the policies and procedures; and

(ii) Complies with its policies and procedures and each specific provision of this part.

(b) *Annual report.* An institution must file an annual report with ORI which contains information specified by ORI on the institution's compliance with this part.

(c) *Additional information.* Along with its assurance or annual report, an institution must send ORI such other aggregated information as ORI may request on the institution's research misconduct proceedings covered by this part and the institution's compliance with the requirements of this part.

§ 93.303 Assurances for small institutions.

(a) If an institution is too small to handle research misconduct proceedings, it may file a ''Small Organization Statement'' with ORI in place of the formal institutional policies and procedures required by §§ 93.301 and 93.304.

(b) By submitting a Small Organization Statement, the institution agrees to report all allegations of research misconduct to ORI. ORI or another appropriate HHS office will work with the institution to develop and implement a process for handling allegations of research misconduct consistent with this part.

(c) The Small Organization Statement does not relieve the institution from complying with any other provision of this part.

§ 93.304 Institutional policies and procedures.

Institutions seeking an approved assurance must have written policies and procedures for addressing research misconduct that include the following—

(a) Consistent with § 93.108, protection of the confidentiality of respondents, complainants, and research subjects identifiable from research records or evidence;

(b) A thorough, competent, objective, and fair response to allegations of research misconduct consistent with and within the time limits of this part, including precautions to ensure that individuals responsible for carrying out any part of the research misconduct proceeding do not have unresolved personal, professional, or financial conflicts of interest with the complainant, respondent, or witnesses;

(c) Notice to the respondent, consistent with and within the time limits of this part;

(d) Written notice to ORI of any decision to open an investigation on or before the date on which the investigation begins;

(e) Opportunity for the respondent to provide written comments on the institution's inquiry report;

(f) Opportunity for the respondent to provide written comments on the draft report of the investigation, and provisions for the institutional investigation committee to consider and address the comments before issuing the final report;

(g) Protocols for handling the research record and evidence, including the requirements of § 93.305;

(h) Appropriate interim institutional actions to protect public health, Federal funds and equipment, and the integrity of the PHS supported research process;

(i) Notice to ORI under § 93.318 and notice of any facts that may be relevant to protect public health, Federal funds and equipment, and the integrity of the PHS supported research process;

(j) Institutional actions in response to final findings of research misconduct;

(k) All reasonable and practical efforts, if requested and as appropriate, to protect or restore the reputation of persons alleged to have engaged in research misconduct but against whom no finding of research misconduct is made;

(l) All reasonable and practical efforts to protect or restore the position and reputation of any complainant, witness, or committee member and to counter potential or actual retaliation against these complainants, witnesses, and committee members; and

(m) Full and continuing cooperation with ORI during its oversight review under Subpart D of this part or any subsequent administrative hearings or appeals under Subpart E of this part. This includes providing all research records and evidence under the institution's control, custody, or possession and access to all persons within its authority necessary to develop a complete record of relevant evidence.

§ 93.305 Responsibility for maintenance and custody of research records and evidence.

An institution, as the responsible legal entity for the PHS supported research, has a continuing obligation under this part to ensure that it maintains adequate records for a research misconduct proceeding. The institution must—

(a) Either before or when the institution notifies the respondent of the allegation, inquiry or investigation, promptly take all reasonable and practical steps to obtain custody of all the research records and evidence needed to conduct the research misconduct proceeding, inventory the records and evidence, and sequester them in a secure manner, except that where the research records or evidence encompass scientific instruments shared by a number of users, custody may be limited to copies of the data or evidence on such instruments, so long as those copies are substantially equivalent to the evidentiary value of the instruments;

(b) Where appropriate, give the respondent copies of, or reasonable, supervised access to the research records;

(c) Undertake all reasonable and practical efforts to take custody of additional research records or evidence that is discovered during the course of a research misconduct proceeding, except that where the research records or evidence encompass scientific instruments shared by a number of users, custody may be limited to copies of the data or evidence on such instruments, so long as those copies are substantially equivalent to the evidentiary value of the instruments; and

(d) Maintain the research records and evidence as required by § 93.317.

§ 93.306 Using a consortium or other person for research misconduct proceedings.

(a) An institution may use the services of a consortium or person that the institution reasonably determines to be qualified by practice and experience to conduct research misconduct proceedings.

(b) A consortium may be a group of institutions, professional organizations, or mixed groups which will conduct research misconduct proceedings for other institutions.

(c) A consortium or person acting on behalf of an institution must follow the requirements of this part in conducting research misconduct proceedings.

THE INSTITUTIONAL INQUIRY

§ 93.307 Institutional inquiry.

(a) *Criteria warranting an inquiry*. An inquiry is warranted if the allegation—

(1) Falls within the definition of research misconduct under this part;

(2) Is within § 93.102; and

(3) Is sufficiently credible and specific so that potential evidence of research misconduct may be identified.

(b) *Notice to respondent and custody of research records*. At the time of or before beginning an inquiry, an institution must make a good faith effort to notify in writing the presumed respondent, if any. If the inquiry subsequently identifies additional respondents, the institution must notify them. To the extent it has not already done so at the allegation stage, the institution must, on or before the date on which the respondent is notified or the inquiry begins, whichever is earlier, promptly take all reasonable and practical steps to obtain custody of all the research records and evidence needed to conduct the research misconduct proceeding, inventory the records and evidence, and sequester them in a secure manner, except that where the research records or evidence encompass scientific instruments shared by a number of users, custody may be limited to copies of the data or evidence on such instruments, so long as those copies are substantially equivalent to the evidentiary value of the instruments.

(c) *Review of evidence*. The purpose of an inquiry is to conduct an initial review of the evidence to determine whether to conduct an investigation. Therefore, an inquiry does not require a full review of all the evidence related to the allegation.

(d) *Criteria warranting an investigation*. An inquiry's purpose is to decide if an allegation warrants an investigation. An investigation is warranted if there is—

(1) A reasonable basis for concluding that the allegation falls within the definition of research misconduct under this part and involves PHS supported biomedical or behavioral research, research training or activities related to that research or research training, as provided in § 93.102; and

(2) Preliminary information-gathering and preliminary fact-finding from the inquiry indicates that the allegation may have substance.

(e) *Inquiry report*. The institution must prepare a written report that meets the requirements of this section and § 93.309.

(f) *Opportunity to comment*. The institution must provide the respondent an opportunity to review and comment on the inquiry report and attach any comments received to the report.

(g) *Time for completion*. The institution must complete the inquiry within 60 calendar days of its initiation unless circumstances clearly warrant a longer period. If the inquiry takes longer than 60 days to complete, the inquiry record must include documentation of the reasons for exceeding the 60-day period.

§ 93.308 Notice of the results of the inquiry.

(a) *Notice to respondent*. The institution must notify the respondent whether the inquiry found that an investigation is warranted. The notice must include a copy of the inquiry report and include a copy of or refer to this part and the institution's policies and procedures adopted under its assurance.

(b) *Notice to complainants*. The institution may notify the complainant who made the allegation whether the inquiry found that an investigation is warranted. The institution may provide relevant portions of the report to the complainant for comment.

§ 93.309 Reporting to ORI on the decision to initiate an investigation.

(a) Within 30 days of finding that an investigation is warranted, the institution must provide ORI with the written finding by the responsible institutional official and a copy of the inquiry report which includes the following information—

(1) The name and position of the respondent;

(2) A description of the allegations of research misconduct;

(3) The PHS support, including, for example, grant numbers, grant applications, contracts, and publications listing PHS support;

(4) The basis for recommending that the alleged actions warrant an investigation; and

(5) Any comments on the report by the respondent or the complainant.

(b) The institution must provide the following information to ORI on request—

(1) The institutional policies and procedures under which the inquiry was conducted;

(2) The research records and evidence reviewed, transcripts or recordings of any interviews, and copies of all relevant documents; and

(3) The charges for the investigation to consider.

(c) *Documentation of decision not to investigate*. Institutions must keep sufficiently detailed documentation of inquiries to permit a later assessment by ORI of the reasons why the institution decided not to conduct an investigation. Consistent with § 93.317, institutions must keep these records in a secure manner for at least 7 years after the termination of the inquiry, and upon request, provide them to ORI or other authorized HHS personnel.

(d) *Notification of special circumstances*. In accordance with § 93.318, institutions must notify ORI and other PHS agencies, as relevant, of any special circumstances that may exist.

THE INSTITUTIONAL INVESTIGATION

§ 93.310 Institutional investigation.

Institutions conducting research misconduct investigations must:

(a) *Time*. Begin the investigation within 30 days after determining that an investigation is warranted.

(b) *Notice to ORI*. Notify the ORI Director of the decision to begin an investigation on or before the date the investigation begins and provide an inquiry report that meets the requirements of § 93.307 and § 93.309.

(c) *Notice to the respondent*. Notify the respondent in writing of the allegations within a reasonable amount of time after determining that an investigation is warranted, but before the investigation begins. The institution must give the respondent written notice of any new allegations of research misconduct within a reasonable amount of time of deciding to pursue allegations not addressed during the inquiry or in the initial notice of investigation.

(d) *Custody of the records*. To the extent they have not already done so at the allegation or inquiry stages, take all reasonable and practical steps to obtain custody of all the research records and evidence needed to conduct the research misconduct proceeding, inventory the records and evidence, and sequester them in a secure manner, except that where the research records or evidence encompass scientific instruments shared by a number of users, custody may be limited to copies of the data or evidence on such instruments, so long as those copies are substantially equivalent to the evidentiary value of the instruments. Whenever possible, the institution must take custody of the records—

(1) Before or at the time the institution notifies the respondent; and

(2) Whenever additional items become known or relevant to the investigation.

(e) *Documentation*. Use diligent efforts to ensure that the investigation is thorough and sufficiently documented and includes examination of all research records and evidence relevant to reaching a decision on the merits of the allegations.

(f) *Ensuring a fair investigation*. Take reasonable steps to ensure an impartial and unbiased investigation to the maximum extent practicable, including participation of persons with appropriate scientific expertise who do not have unresolved personal, professional, or financial conflicts of interest with those involved with the inquiry or investigation.

(g) *Interviews*. Interview each respondent, complainant, and any other available person who has been reasonably identified as having information regarding any relevant aspects of the investigation, including witnesses identified by the respondent, and record or transcribe each interview, provide the recording or transcript to the interviewee for correction, and include the recording or transcript in the record of the investigation.

(h) *Pursue leads*. Pursue diligently all significant issues and leads discovered

that are determined relevant to the investigation, including any evidence of additional instances of possible research misconduct, and continue the investigation to completion.

§ 93.311 Investigation time limits.

(a) *Time limit for completing an investigation*. An institution must complete all aspects of an investigation within 120 days of beginning it, including conducting the investigation, preparing the report of findings, providing the draft report for comment in accordance with § 93.312, and sending the final report to ORI under § 93.315.

(b) *Extension of time limit*. If unable to complete the investigation in 120 days, the institution must ask ORI for an extension in writing.

(c) *Progress reports*. If ORI grants an extension, it may direct the institution to file periodic progress reports.

§ 93.312 Opportunity to comment on the investigation report.

(a) The institution must give the respondent a copy of the draft investigation report and, concurrently, a copy of, or supervised access to, the evidence on which the report is based. The comments of the respondent on the draft report, if any, must be submitted within 30 days of the date on which the respondent received the draft investigation report.

(b) The institution may provide the complainant a copy of the draft investigation report or relevant portions of that report. The comments of the complainant, if any, must be submitted within 30 days of the date on which the complainant received the draft investigation report or relevant portions of it.

§ 93.313 Institutional investigation report.

The final institutional investigation report must be in writing and include:

(a) *Allegations*. Describe the nature of the allegations of research misconduct.

(b) *PHS support*. Describe and document the PHS support, including, for example, any grant numbers, grant applications, contracts, and publications listing PHS support.

(c) *Institutional charge*. Describe the specific allegations of research misconduct for consideration in the investigation.

(d) *Policies and procedures*. If not already provided to ORI with the inquiry report, include the institutional policies and procedures under which the investigation was conducted.

(e) *Research records and evidence*. Identify and summarize the research records and evidence reviewed, and identify any evidence taken into custody but not reviewed.

(f) *Statement of findings*. For each separate allegation of research misconduct identified during the investigation, provide a finding as to whether research misconduct did or did not occur, and if so—

(1) Identify whether the research misconduct was falsification, fabrication, or plagiarism, and if it was intentional, knowing, or in reckless disregard;

(2) Summarize the facts and the analysis which support the conclusion and consider the merits of any reasonable explanation by the respondent;

(3) Identify the specific PHS support;

(4) Identify whether any publications need correction or retraction;

(5) Identify the person(s) responsible for the misconduct; and

(6) List any current support or known applications or proposals for support that the respondent has pending with non-PHS Federal agencies.

(g) *Comments*. Include and consider any comments made by the respondent and complainant on the draft investigation report.

(h) *Maintain and provide records*. Maintain and provide to ORI upon request all relevant research records and records of the institution's research misconduct proceeding, including results of all interviews and the transcripts or recordings of such interviews.

§ 93.314 Institutional appeals.

(a) While not required by this part, if the institution's procedures provide for an appeal by the respondent that could result in a reversal or modification of the findings of research misconduct in the investigation report, the institution must complete any such appeal within 120 days of its filing. Appeals from personnel or similar actions that

would not result in a reversal or modification of the findings of research misconduct are excluded from the 120-day limit.

(b) If unable to complete any appeals within 120 days, the institution must ask ORI for an extension in writing and provide an explanation for the request.

(c) ORI may grant requests for extension for good cause. If ORI grants an extension, it may direct the institution to file periodic progress reports.

§ 93.315 Notice to ORI of institutional findings and actions.

The institution must give ORI the following:

(a) *Investigation Report*. Include a copy of the report, all attachments, and any appeals.

(b) *Final institutional action*. State whether the institution found research misconduct, and if so, who committed the misconduct.

(c) *Findings*. State whether the institution accepts the investigation's findings.

(d) *Institutional administrative actions*. Describe any pending or completed administrative actions against the respondent.

§ 93.316 Completing the research misconduct process.

(a) ORI expects institutions to carry inquiries and investigations through to completion and to pursue diligently all significant issues. An institution must notify ORI in advance if the institution plans to close a case at the inquiry, investigation, or appeal stage on the basis that the respondent has admitted guilt, a settlement with the respondent has been reached, or for any other reason, except the closing of a case at the inquiry stage on the basis that an investigation is not warranted or a finding of no misconduct at the investigation stage, which must be reported to ORI under § 93.315.

(b) After consulting with the institution on its basis for closing a case under paragraph (a) of this section, ORI may conduct an oversight review of the institution's handling of the case and take appropriate action including:

(1) Approving or conditionally approving closure of the case;

(2) Directing the institution to complete its process;

(3) Referring the matter for further investigation by HHS; or,

(4) Taking a compliance action.

OTHER INSTITUTIONAL RESPONSIBILITIES

§ 93.317 Retention and custody of the research misconduct proceeding record.

(a) *Definition of records of research misconduct proceedings*. As used in this section, the term ''records of research misconduct proceedings'' includes:

(1) The records that the institution secures for the proceeding pursuant to §§ 93.305, 93.307(b) and 93.310(d), except to the extent the institution subsequently determines and documents that those records are not relevant to the proceeding or that the records duplicate other records that are being retained;

(2) The documentation of the determination of irrelevant or duplicate records;

(3) The inquiry report and final documents (not drafts) produced in the course of preparing that report, including the documentation of any decision not to investigate as required by § 93.309(d);

(4) The investigation report and all records (other than drafts of the report) in support of that report, including the recordings or transcriptions of each interview conducted pursuant to § 93.310(g); and

(5) The complete record of any institutional appeal covered by § 93.314.

(b) *Maintenance of record*. Unless custody has been transferred to HHS under paragraph (c) of this section, or ORI has advised the institution in writing that it no longer needs to retain the records, an institution must maintain records of research misconduct proceedings in a secure manner for 7 years after completion of the proceeding or the completion of any PHS proceeding involving the research misconduct allegation under subparts D and E of this part, whichever is later.

(c) *Provision for HHS custody*. On request, institutions must transfer custody of or provide copies to HHS, of any institutional record relevant to a research misconduct allegation covered by this part, including the research

records and evidence, to perform forensic or other analyses or as otherwise needed to conduct an HHS inquiry or investigation or for ORI to conduct its review or to present evidence in any proceeding under subparts D and E of this part.

§ 93.318 Notifying ORI of special circumstances.

At any time during a research misconduct proceeding, as defined in § 93.223, an institution must notify ORI immediately if it has reason to believe that any of the following conditions exist:

(a) Health or safety of the public is at risk, including an immediate need to protect human or animal subjects.

(b) HHS resources or interests are threatened.

(c) Research activities should be suspended.

(d) There is reasonable indication of possible violations of civil or criminal law.

(e) Federal action is required to protect the interests of those involved in the research misconduct proceeding.

(f) The research institution believes the research misconduct proceeding may be made public prematurely so that HHS may take appropriate steps to safeguard evidence and protect the rights of those involved.

(g) The research community or public should be informed.

§ 93.319 Institutional standards.

(a) Institutions may have internal standards of conduct different from the HHS standards for research misconduct under this part. Therefore, an institution may find conduct to be actionable under its standards even if the action does not meet this part's definition of research misconduct.

(b) An HHS finding or settlement does not affect institutional findings or administrative actions based on an institution's internal standards of conduct.

Subpart D—Responsibilities of the U.S. Department of Health and Human Services

GENERAL INFORMATION

§ 93.400 General statement of ORI authority.

(a) *ORI review*. ORI may respond directly to any allegation of research misconduct at any time before, during, or after an institution's response to the matter. The ORI response may include, but is not limited to—

(1) Conducting allegation assessments;

(2) Determining independently if jurisdiction exists under this part in any matter;

(3) Forwarding allegations of research misconduct to the appropriate institution or HHS component for inquiry or investigation;

(4) Recommending that HHS should perform an inquiry or investigation or issue findings and taking all appropriate actions in response to the inquiry, investigation, or findings;

(5) Notifying or requesting assistance and information from PHS funding components or other affected Federal and state offices and agencies or institutions;

(6) Reviewing an institution's findings and process;

(7) Making a finding of research misconduct; and

(8) Proposing administrative actions to HHS.

(b) *Requests for information*. ORI may request clarification or additional information, documentation, research records, or evidence from an institution or its members or other persons or sources to carry out ORI's review.

(c) *HHS administrative actions*. (1) In response to a research misconduct proceeding, ORI may propose administrative actions against any person to the HHS and, upon HHS approval and final action in accordance with this part, implement the actions.

(2) ORI may propose to the HHS debarring official that a person be suspended or debarred from receiving Federal funds and may propose to other appropriate PHS components the implementation of HHS administrative

actions within the components' authorities.

(d) *ORI assistance to institutions.* At any time, ORI may provide information, technical assistance, and procedural advice to institutional officials as needed regarding an institution's participation in research misconduct proceedings.

(e) *Review of institutional assurances.* ORI may review institutional assurances and policies and procedures for compliance with this part.

(f) *Institutional compliance.* ORI may make findings and impose HHS administrative actions related to an institution's compliance with this part and with its policies and procedures, including an institution's participation in research misconduct proceedings.

§ 93.401 Interaction with other offices and interim actions.

(a) ORI may notify and consult with other offices at any time if it has reason to believe that a research misconduct proceeding may involve that office. If ORI believes that a criminal or civil fraud violation may have occurred, it shall promptly refer the matter to the Department of Justice (DOJ), the HHS Inspector General (OIG), or other appropriate investigative body. ORI may provide expertise and assistance to the DOJ, OIG, PHS offices, other Federal offices, and state or local offices involved in investigating or otherwise pursuing research misconduct allegations or related matters.

(b) ORI may notify affected PHS offices and funding components at any time to permit them to make appropriate interim responses to protect the health and safety of the public, to promote the integrity of the PHS supported research and research process, and to conserve public funds.

(c) The information provided will not be disclosed as part of the peer review and advisory committee review processes, but may be used by the Secretary in making decisions about the award or continuation of funding.

RESEARCH MISCONDUCT ISSUES

§ 93.402 ORI allegation assessments.

(a) When ORI receives an allegation of research misconduct directly or becomes aware of an allegation or apparent instance of research misconduct, it may conduct an initial assessment or refer the matter to the relevant institution for an assessment, inquiry, or other appropriate actions.

(b) If ORI conducts an assessment, it considers whether the allegation of research misconduct appears to fall within the definition of research misconduct, appears to involve PHS supported biomedical or behavior research, research training or activities related to that research or research training, as provided in § 93.102, and whether it is sufficiently specific so that potential evidence may be identified and sufficiently substantive to warrant an inquiry. ORI may review all readily accessible, relevant information related to the allegation.

(c) If ORI decides that an inquiry is warranted, it forwards the matter to the appropriate institution or HHS component.

(d) If ORI decides that an inquiry is not warranted it will close the case and forward the allegation in accordance with paragraph (e) of this section.

(e) ORI may forward allegations that do not fall within the jurisdiction of this part to the appropriate HHS component, Federal or State agency, institution, or other appropriate entity.

§ 93.403 ORI review of research misconduct proceedings.

ORI may conduct reviews of research misconduct proceedings. In conducting its review, ORI may—

(a) Determine whether there is HHS jurisdiction under this part;

(b) Consider any reports, institutional findings, research records, and evidence;

(c) Determine if the institution conducted the proceedings in a timely and fair manner in accordance with this part with sufficient thoroughness, objectivity, and competence to support the conclusions;

(d) Obtain additional information or materials from the institution, the respondent, complainants, or other persons or sources;

(e) Conduct additional analyses and develop evidence;

(f) Decide whether research misconduct occurred, and if so who committed it;

(g) Make appropriate research misconduct findings and propose HHS administrative actions; and

(h) Take any other actions necessary to complete HHS' review.

§ 93.404 Findings of research misconduct and proposed administrative actions.

After completing its review, ORI either closes the case without a finding of research misconduct or—

(a) Makes findings of research misconduct and proposes and obtains HHS approval of administrative actions based on the record of the research misconduct proceedings and any other information obtained by ORI during its review; or

(b) Recommends that HHS seek to settle the case.

§ 93.405 Notifying the respondent of findings of research misconduct and HHS administrative actions.

(a) When the ORI makes a finding of research misconduct or seeks to impose or enforce HHS administrative actions, other than debarment or suspension, it notifies the respondent in a charge letter. In cases involving a debarment or suspension action, the HHS debarring official issues a notice of proposed debarment or suspension to the respondent as part of the charge letter. The charge letter includes the ORI findings of research misconduct and the basis for them and any HHS administrative actions. The letter also advises the respondent of the opportunity to contest the findings and administrative actions under Subpart E of this part.

(b) The ORI sends the charge letter by certified mail or a private delivery service to the last known address of the respondent or the last known principal place of business of the respondent's attorney.

§ 93.406 Final HHS actions.

Unless the respondent contests the charge letter within the 30-day period prescribed in § 93.501, the ORI finding of research misconduct is the final HHS action on the research misconduct issues and the HHS administrative actions become final and will be implemented, except that the debarring official's decision is the final HHS action on any debarment or suspension actions.

§ 93.407 HHS administrative actions.

(a) In response to a research misconduct proceeding, HHS may impose HHS administrative actions that include but are not limited to:

(1) Clarification, correction, or retraction of the research record.

(2) Letters of reprimand.

(3) Imposition of special certification or assurance requirements to ensure compliance with applicable regulations or terms of PHS grants, contracts, or cooperative agreements.

(4) Suspension or termination of a PHS grant, contract, or cooperative agreement.

(5) Restriction on specific activities or expenditures under an active PHS grant, contract, or cooperative agreement.

(6) Special review of all requests for PHS funding.

(7) Imposition of supervision requirements on a PHS grant, contract, or cooperative agreement.

(8) Certification of attribution or authenticity in all requests for support and reports to the PHS.

(9) No participation in any advisory capacity to the PHS.

(10) Adverse personnel action if the respondent is a Federal employee, in compliance with relevant Federal personnel policies and laws.

(11) Suspension or debarment under 45 CFR Part 76, 48 CFR Subparts 9.4 and 309.4, or both.

(b) In connection with findings of research misconduct, HHS also may seek to recover PHS funds spent in support of the activities that involved research misconduct.

(c) Any authorized HHS component may impose, administer, or enforce HHS administrative actions separately or in coordination with other HHS

components, including, but not limited to ORI, the Office of Inspector General, the PHS funding component, and the debarring official.

§ 93.408 Mitigating and aggravating factors in HHS administrative actions.

The purpose of HHS administrative actions is remedial. The appropriate administrative action is commensurate with the seriousness of the misconduct, and the need to protect the health and safety of the public, promote the integrity of the PHS supported research and research process, and conserve public funds. HHS considers aggravating and mitigating factors in determining appropriate HHS administrative actions and their terms. HHS may consider other factors as appropriate in each case. The existence or nonexistence of any factor is not determinative:

(a) *Knowing, intentional, or reckless.* Were the respondent's actions knowing or intentional or was the conduct reckless?

(b) *Pattern.* Was the research misconduct an isolated event or part of a continuing or prior pattern of dishonest conduct?

(c) *Impact.* Did the misconduct have significant impact on the proposed or reported research record, research subjects, other researchers, institutions, or the public health or welfare?

(d) *Acceptance of responsibility.* Has the respondent accepted responsibility for the misconduct by—

(1) Admitting the conduct;

(2) Cooperating with the research misconduct proceedings;

(3) Demonstrating remorse and awareness of the significance and seriousness of the research misconduct; and

(4) Taking steps to correct or prevent the recurrence of the research misconduct.

(e) *Failure to accept responsibility.* Does the respondent blame others rather than accepting responsibility for the actions?

(f) *Retaliation.* Did the respondent retaliate against complainants, witnesses, committee members, or other persons?

(g) *Present responsibility.* Is the respondent presently responsible to conduct PHS supported research?

(h) *Other factors.* Other factors appropriate to the circumstances of a particular case.

§ 93.409 Settlement of research misconduct proceedings.

(a) HHS may settle a research misconduct proceeding at any time it concludes that settlement is in the best interests of the Federal government and the public health or welfare.

(b) Settlement agreements are publicly available, regardless of whether the ORI made a finding of research misconduct.

§ 93.410 Final HHS action with no settlement or finding of research misconduct.

When the final HHS action does not result in a settlement or finding of research misconduct, ORI may:

(a) Provide written notice to the respondent, the relevant institution, the complainant, and HHS officials.

(b) Take any other actions authorized by law.

§ 93.411 Final HHS action with settlement or finding of research misconduct.

When a final HHS action results in a settlement or research misconduct finding, ORI may:

(a) Provide final notification of any research misconduct findings and HHS administrative actions to the respondent, the relevant institution, the complainant, and HHS officials. The debarring official may provide a separate notice of final HHS action on any debarment or suspension actions.

(b) Identify publications which require correction or retraction and prepare and send a notice to the relevant journal.

(c) Publish notice of the research misconduct findings.

(d) Notify the respondent's current employer.

(e) Take any other actions authorized by law.

INSTITUTIONAL COMPLIANCE ISSUES

§ 93.412 Making decisions on institutional noncompliance.

(a) Institutions must foster a research environment that discourages misconduct in all research and that deals forthrightly with possible misconduct associated with PHS supported research.

(b) ORI may decide that an institution is not compliant with this part if the institution shows a disregard for, or inability or unwillingness to implement and follow the requirements of this part and its assurance. In making this decision, ORI may consider, but is not limited to the following factors—

(1) Failure to establish and comply with policies and procedures under this part;

(2) Failure to respond appropriately when allegations of research misconduct arise;

(3) Failure to report to ORI all investigations and findings of research misconduct under this part;

(4) Failure to cooperate with ORI's review of research misconduct proceedings; or

(5) Other actions or omissions that have a material, adverse effect on reporting and responding to allegations of research misconduct.

§ 93.413 HHS compliance actions.

(a) An institution's failure to comply with its assurance and the requirements of this part may result in enforcement action against the institution.

(b) ORI may address institutional deficiencies through technical assistance if the deficiencies do not substantially affect compliance with this part.

(c) If an institution fails to comply with its assurance and the requirements of this part, HHS may take some or all of the following compliance actions:

(1) Issue a letter of reprimand.

(2) Direct that research misconduct proceedings be handled by HHS.

(3) Place the institution on special review status.

(4) Place information on the institutional noncompliance on the ORI Web site.

(5) Require the institution to take corrective actions.

(6) Require the institution to adopt and implement an institutional integrity agreement.

(7) Recommend that HHS debar or suspend the entity.

(8) Any other action appropriate to the circumstances.

(d) If the institution's actions constitute a substantial or recurrent failure to comply with this part, ORI may also revoke the institution's assurance under §§ 93.301 or 93.303.

(e) ORI may make public any findings of institutional noncompliance and HHS compliance actions.

DISCLOSURE OF INFORMATION

§ 93.414 Notice.

(a) ORI may disclose information to other persons for the purpose of providing or obtaining information about research misconduct as permitted under the Privacy Act, 5 U.S.C. 552a.

(b) ORI may publish a notice of final agency findings of research misconduct, settlements, and HHS administrative actions and release and withhold information as permitted by the Privacy Act and the Freedom of Information Act, 5 U.S.C. 552.

Subpart E—Opportunity To Contest ORI Findings of Research Misconduct and HHS Administrative Actions

GENERAL INFORMATION

§ 93.500 General policy.

(a) This subpart provides a respondent an opportunity to contest ORI findings of research misconduct and HHS administrative actions, including debarment or suspension, arising under 42 U.S.C. 289b in connection with PHS supported biomedical and behavioral research, research training, or activities related to that research or research training.

(b) A respondent has an opportunity to contest ORI research misconduct findings and HHS administrative actions under this part, including debarment or suspension, by requesting an

administrative hearing before an Administrative Law Judge (ALJ) affiliated with the HHS DAB, when—

(1) ORI has made a finding of research misconduct against a respondent; and

(2) The respondent has been notified of those findings and any proposed HHS administrative actions, including debarment or suspension, in accordance with this part.

(c) The ALJ's ruling on the merits of the ORI research misconduct findings and the HHS administrative actions is subject to review by the Assistant Secretary for Health in accordance with § 93.523. The decision made under that section is the final HHS action, unless that decision results in a recommendation for debarment or suspension. In that case, the decision under § 93.523 shall constitute findings of fact to the debarring official in accordance with 45 CFR 76.845(c).

(d) Where a proposed debarment or suspension action is based upon an ORI finding of research misconduct, the procedures in this part provide the notification, opportunity to contest, and fact-finding required under the HHS debarment and suspension regulations at 45 CFR part 76, subparts H and G, respectively, and 48 CFR Subparts 9.4 and 309.4.

§ 93.501 Opportunity to contest findings of research misconduct and administrative actions.

(a) *Opportunity to contest.* A respondent may contest ORI findings of research misconduct and HHS administrative actions, including any debarment or suspension action, by requesting a hearing within 30 days of receipt of the charge letter or other written notice provided under § 93.405.

(b) *Form of a request for hearing.* The respondent's request for a hearing must be—

(1) In writing;

(2) Signed by the respondent or by the respondent's attorney; and

(3) Sent by certified mail, or other equivalent (*i.e.*, with a verified method of delivery), to the DAB Chair and ORI.

(c) *Contents of a request for hearing.* The request for a hearing must—

(1) Admit or deny each finding of research misconduct and each factual assertion made in support of the finding;

(2) Accept or challenge each proposed HHS administrative action;

(3) Provide detailed, substantive reasons for each denial or challenge;

(4) Identify any legal issues or defenses that the respondent intends to raise during the proceeding; and

(5) Identify any mitigating factors that the respondent intends to prove.

(d) *Extension for good cause to supplement the hearing request.* (1) After receiving notification of the appointment of the ALJ, the respondent has 10 days to submit a written request to the ALJ for supplementation of the hearing request to comply fully with the requirements of paragraph (c) of this section. The written request must show good cause in accordance with paragraph (d)(2) of this section and set forth the proposed supplementation of the hearing request. The ALJ may permit the proposed supplementation of the hearing request in whole or in part upon a finding of good cause.

(2) Good cause means circumstances beyond the control of the respondent or respondent's representative and not attributable to neglect or administrative inadequacy.

HEARING PROCESS

§ 93.502 Appointment of the Administrative Law Judge and scientific expert.

(a) Within 30 days of receiving a request for a hearing, the DAB Chair, in consultation with the Chief Administrative Law Judge, must designate an Administrative Law Judge (ALJ) to determine whether the hearing request should be granted and, if the hearing request is granted, to make recommended findings in the case after a hearing or review of the administrative record in accordance with this part.

(b) The ALJ may retain one or more persons with appropriate scientific or technical expertise to assist the ALJ in evaluating scientific or technical issues related to the findings of research misconduct.

(1) On the ALJ's or a party's motion to appoint an expert, the ALJ must give the parties an opportunity to submit nominations. If such a motion is

made by a party, the ALJ must appoint an expert, either:

(i) The expert, if any, who is agreed upon by both parties and found to be qualified by the ALJ; or,

(ii) If the parties cannot agree upon an expert, the expert chosen by the ALJ.

(2) The ALJ may seek advice from the expert(s) at any time during the discovery and hearing phases of the proceeding. The expert(s) shall provide advice to the ALJ in the form of a written report or reports that will be served upon the parties within 10 days of submission to the ALJ. That report must contain a statement of the expert's background and qualifications. Any comment on or response to a report by a party, which may include comments on the expert's qualifications, must be submitted to the ALJ in accordance with § 93.510(c). The written reports and any comment on, or response to them are part of the record. Expert witnesses of the parties may testify on the reports and any comments or responses at the hearing, unless the ALJ determines such testimony to be inadmissible in accordance with § 93.519, or that such testimony would unduly delay the proceeding.

(c) No ALJ, or person hired or appointed to assist the ALJ, may serve in any proceeding under this subpart if he or she has any real or apparent conflict of interest, bias, or prejudice that might reasonably impair his or her objectivity in the proceeding.

(d) Any party to the proceeding may request the ALJ or scientific expert to withdraw from the proceeding because of a real or apparent conflict of interest, bias, or prejudice under paragraph (c) of this section. The motion to disqualify must be timely and state with particularity the grounds for disqualification. The ALJ may rule upon the motion or certify it to the Chief ALJ for decision. If the ALJ rules upon the motion, either party may appeal the decision to the Chief ALJ.

(e) An ALJ must withdraw from any proceeding for any reason found by the ALJ or Chief ALJ to be disqualifying.

§ 93.503 Grounds for granting a hearing request.

(a) The ALJ must grant a respondent's hearing request if the ALJ determines there is a genuine dispute over facts material to the findings of research misconduct or proposed administrative actions, including any debarment or suspension action. The respondent's general denial or assertion of error for each finding of research misconduct, and any basis for the finding, or for the proposed HHS administrative actions in the charge letter, is not sufficient to establish a genuine dispute.

(b) The hearing request must specifically deny each finding of research misconduct in the charge letter, each basis for the finding and each HHS administrative action in the charge letter, or it is considered an admission by the respondent. If the hearing request does not specifically dispute the HHS administrative actions, including any debarment or suspension actions, they are considered accepted by the respondent.

(c) If the respondent does not request a hearing within the 30-day time period prescribed in § 93.501(a), the finding(s) and any administrative action(s), other than debarment or suspension actions, become final agency actions at the expiration of the 30-day period. Where there is a proposal for debarment or suspension, after the expiration of the 30-day time period the official record is closed and forwarded to the debarring official for a final decision.

(d) If the ALJ grants the hearing request, the respondent may waive the opportunity for any in-person proceeding, and the ALJ may review and decide the case on the basis of the administrative record. The ALJ may grant a respondent's request that waiver of the in-person proceeding be conditioned upon the opportunity for respondent to file additional pleadings and documentation. ORI may also supplement the administrative record through pleadings, documents, in-person or telephonic testimony, and oral presentations.

§ 93.504 Grounds for dismissal of a hearing request.

(a) The ALJ must dismiss a hearing request if the respondent—

(1) Does not file the request within 30 days after receiving the charge letter;

(2) Does not raise a genuine dispute over facts or law material to the findings of research misconduct and any administrative actions, including debarment and suspension actions, in the hearing request or in any extension to supplement granted by the ALJ under § 93.501(d);

(3) Does not raise any issue which may properly be addressed in a hearing;

(4) Withdraws or abandons the hearing request; or

(b) The ALJ may dismiss a hearing request if the respondent fails to provide ORI with notice in the form and manner required by § 93.501.

§ 93.505 Rights of the parties.

(a) The parties to the hearing are the respondent and ORI. The investigating institution is not a party to the case, unless it is a respondent.

(b) Except as otherwise limited by this subpart, the parties may—

(1) Be accompanied, represented, and advised by an attorney;

(2) Participate in any case-related conference held by the ALJ;

(3) Conduct discovery of documents and other tangible items;

(4) Agree to stipulations of fact or law that must be made part of the record;

(5) File motions in writing before the ALJ;

(6) Present evidence relevant to the issues at the hearing;

(7) Present and cross-examine witnesses;

(8) Present oral arguments;

(9) Submit written post-hearing briefs, proposed findings of fact and conclusions of law, and reply briefs within reasonable time frames agreed upon by the parties or established by the ALJ as provided in § 93.522; and

(10) Submit materials to the ALJ and other parties under seal, or in redacted form, when necessary, to protect the confidentiality of any information contained in them consistent with this part, the Privacy Act, the Freedom of Information Act, or other Federal law or regulation.

§ 93.506 Authority of the Administrative Law Judge.

(a) The ALJ assigned to the case must conduct a fair and impartial hearing, avoid unnecessary delay, maintain order, and assure that a complete and accurate record of the proceeding is properly made. The ALJ is bound by all Federal statutes and regulations, Secretarial delegations of authority, and applicable HHS policies and may not refuse to follow them or find them invalid, as provided in paragraph (c)(4) of this section. The ALJ has the authorities set forth in this part.

(b) Subject to review as provided elsewhere in this subpart, the ALJ may—

(1) Set and change the date, time, schedule, and place of the hearing upon reasonable notice to the parties;

(2) Continue or recess the hearing in whole or in part for a reasonable period of time;

(3) Hold conferences with the parties to identify or simplify the issues, or to consider other matters that may aid in the prompt disposition of the proceeding;

(4) Administer oaths and affirmations;

(5) Require the attendance of witnesses at a hearing;

(6) Rule on motions and other procedural matters;

(7) Require the production of documents and regulate the scope and timing of documentary discovery as permitted by this part;

(8) Require each party before the hearing to provide the other party and the ALJ with copies of any exhibits that the party intends to introduce into evidence;

(9) Issue a ruling, after an *in camera* inspection if necessary, to address the disclosure of any evidence or portion of evidence for which confidentiality is requested under this part or other Federal law or regulation, or which a party submitted under seal;

(10) Regulate the course of the hearing and the conduct of representatives, parties, and witnesses;

(11) Examine witnesses and receive evidence presented at the hearing;

(12) Admit, exclude, or limit evidence offered by a party;

(13) Hear oral arguments on facts or law during or after the hearing;

(14) Upon motion of a party, take judicial notice of facts;

(15) Upon motion of a party, decide cases, in whole or in part, by summary judgment where there is no disputed issue of material fact;

(16) Conduct any conference or oral argument in person, by telephone, or by audio-visual communication;

(17) Take action against any party for failing to follow an order or procedure or for disruptive conduct.

(c) The ALJ does not have the authority to—

(1) Enter an order in the nature of a directed verdict;

(2) Compel settlement negotiations;

(3) Enjoin any act of the Secretary; or

(4) Find invalid or refuse to follow Federal statutes or regulations, Secretarial delegations of authority, or HHS policies.

§ 93.507 Ex parte communications.

(a) No party, attorney, or other party representative may communicate *ex parte* with the ALJ on any matter at issue in a case, unless both parties have notice and an opportunity to participate in the communication. However, a party, attorney, or other party representative may communicate with DAB staff about administrative or procedural matters.

(b) If an *ex parte* communication occurs, the ALJ will disclose it to the other party and make it part of the record after the other party has an opportunity to comment.

(c) The provisions of this section do not apply to communications between an employee or contractor of the DAB and the ALJ.

§ 93.508 Filing, forms, and service.

(a) *Filing*. (1) Unless the ALJ provides otherwise, all submissions required or authorized to be filed in the proceeding must be filed with the ALJ.

(2) Submissions are considered filed when they are placed in the mail, transmitted to a private delivery service for the purpose of delivering the item to the ALJ, or submitted in another manner authorized by the ALJ.

(b) *Forms*. (1) Unless the ALJ provides otherwise, all submissions filed in the proceeding must include an original and two copies. The ALJ may designate the format for copies of nondocumentary materials such as videotapes, computer disks, or physical evidence. This provision does not apply to the charge letter or other written notice provided under § 93.405.

(2) Every submission filed in the proceeding must include the title of the case, the docket number, and a designation of the nature of the submission, such as a ''Motion to Compel the Production of Documents'' or ''Respondent's Proposed Exhibits.''

(3) Every submission filed in the proceeding must be signed by and contain the address and telephone number of the party on whose behalf the document or paper was filed, or the attorney of record for the party.

(c) *Service*. A party filing a submission with the ALJ must, at the time of filing, serve a copy on the other party. Service may be made either to the last known principal place of business of the party's attorney if the party is represented by an attorney, or, if not, to the party's last known address. Service may be made by—

(1) Certified mail;

(2) First-class postage prepaid U.S. Mail;

(3) A private delivery service;

(4) Hand-delivery; or

(5) Facsimile or other electronic means if permitted by the ALJ.

(d) *Proof of service*. Each party filing a document or paper with the ALJ must also provide proof of service at the time of the filing. Any of the following items may constitute proof of service:

(1) A certified mail receipt returned by the postal service with a signature;

(2) An official record of the postal service or private delivery service;

(3) A certificate of service stating the method, place, date of service, and person served that is signed by an individual with personal knowledge of these facts; or

(4) Other proof authorized by the ALJ.

§ 93.509 Computation of time.

(a) In computing any period of time under this part for filing and service or for responding to an order issued by the ALJ, the computation begins with the day following the act or event, and includes the last day of the period unless that day is a Saturday, Sunday, or legal holiday observed by the Federal government, in which case it includes the next business day.

(b) When the period of time allowed is less than 7 days, intermediate Saturdays, Sundays, and legal holidays observed by the Federal government must be excluded from the computation.

(c) Where a document has been filed by placing it in the mail, an additional 5 days must be added to the time permitted for any response. This paragraph does not apply to a respondent's request for hearing under § 93.501.

(d) Except for the respondent's request for a hearing, the ALJ may modify the time for the filing of any document or paper required or authorized under the rules in this part to be filed for good cause shown. When time permits, notice of a party's request for extension of the time and an opportunity to respond must be provided to the other party.

§ 93.510 Filing motions.

(a) Parties must file all motions and requests for an order or ruling with the ALJ, serve them on the other party, state the nature of the relief requested, provide the legal authority relied upon, and state the facts alleged.

(b) All motions must be in writing except for those made during a prehearing conference or at the hearing.

(c) Within 10 days after being served with a motion, or other time as set by the ALJ, a party may file a response to the motion. The moving party may not file a reply to the responsive pleading unless allowed by the ALJ.

(d) The ALJ may not grant a motion before the time for filing a response has expired, except with the parties' consent or after a hearing on the motion. However, the ALJ may overrule or deny any motion without awaiting a response.

(e) The ALJ must make a reasonable effort to dispose of all motions promptly, and, whenever possible, dispose of all outstanding motions before the hearing.

§ 93.511 Prehearing conferences.

(a) The ALJ must schedule an initial prehearing conference with the parties within 30 days of the DAB Chair's assignment of the case.

(b) The ALJ may use the initial prehearing conference to discuss—

(1) Identification and simplification of the issues, specification of disputes of fact and their materiality to the ORI findings of research misconduct and any HHS administrative actions, and amendments to the pleadings, including any need for a more definite statement;

(2) Stipulations and admissions of fact including the contents, relevancy, and authenticity of documents;

(3) Respondent's waiver of an administrative hearing, if any, and submission of the case on the basis of the administrative record as provided in § 93.503(d);

(4) Identification of legal issues and any need for briefing before the hearing;

(5) Identification of evidence, pleadings, and other materials, if any, that the parties should exchange before the hearing;

(6) Identification of the parties' witnesses, the general nature of their testimony, and the limitation on the number of witnesses and the scope of their testimony;

(7) Scheduling dates such as the filing of briefs on legal issues identified in the charge letter or the respondent's request for hearing, the exchange of witness lists, witness statements, proposed exhibits, requests for the production of documents, and objections to proposed witnesses and documents;

(8) Scheduling the time, place, and anticipated length of the hearing; and

(9) Other matters that may encourage the fair, just, and prompt disposition of the proceedings.

(c) The ALJ may schedule additional prehearing conferences as appropriate, upon reasonable notice to or request of the parties.

(d) All prehearing conferences will be audio-taped with copies provided to the parties upon request.

(e) Whenever possible, the ALJ must memorialize in writing any oral rulings within 10 days after the prehearing conference.

(f) By 15 days before the scheduled hearing date, the ALJ must hold a final prehearing conference to resolve to the maximum extent possible all outstanding issues about evidence, witnesses, stipulations, motions and all other matters that may encourage the fair, just, and prompt disposition of the proceedings.

§ 93.512 Discovery.

(a) *Request to provide documents.* A party may only request another party to produce documents or other tangible items for inspection and copying that are relevant and material to the issues identified in the charge letter and in the respondent's request for hearing.

(b) *Meaning of documents.* For purposes of this subpart, the term documents includes information, reports, answers, records, accounts, papers, tangible items, and other data and documentary evidence. This subpart does not require the creation of any document. However, requested data stored in an electronic data storage system must be produced in a form reasonably accessible to the requesting party.

(c) *Nondisclosable items.* This section does not authorize the disclosure of—

(1) Interview reports or statements obtained by any party, or on behalf of any party, of persons whom the party will not call as witness in its case-in-chief;

(2) Analyses and summaries prepared in conjunction with the inquiry, investigation, ORI oversight review, or litigation of the case; or

(3) Any privileged documents, including but not limited to those protected by the attorney-client privilege, attorney-work product doctrine, or Federal law or regulation.

(d) *Responses to a discovery request.* Within 30 days of receiving a request for the production of documents, a party must either fully respond to the request, submit a written objection to the discovery request, or seek a protective order from the ALJ. If a party objects to a request for the production of documents, the party must identify each document or item subject to the scope of the request and state the basis of the objection for each document, or any part that the party does not produce.

(1) Within 30 days of receiving any objections, the party seeking production may file a motion to compel the production of the requested documents.

(2) The ALJ may order a party to produce the requested documents for *in camera* inspection to evaluate the merits of a motion to compel or for a protective order.

(3) The ALJ must compel the production of a requested document and deny a motion for a protective order, unless the requested document is—

(i) Not relevant or material to the issues identified in the charge letter or the respondent's request for hearing;

(ii) Unduly costly or burdensome to produce;

(iii) Likely to unduly delay the proceeding or substantially prejudice a party;

(iv) Privileged, including but not limited to documents protected by the attorney-client privilege, attorney-work product doctrine, or Federal law or regulation; or

(v) Collateral to issues to be decided at the hearing.

(4) If any part of a document is protected from disclosure under paragraph (d)(3) of this section, the ALJ must redact the protected portion of a document before giving it to the requesting party.

(5) The party seeking discovery has the burden of showing that the ALJ should allow it.

(e) *Refusal to produce items.* If a party refuses to provide requested documents when ordered by the ALJ, the ALJ may take corrective action, including but not limited to, ordering the noncompliant party to submit written answers under oath to written interrogatories posed by the other party or taking any of the actions at § 93.515.

§ 93.513 Submission of witness lists, witness statements, and exhibits.

(a) By 60 days before the scheduled hearing date, each party must give the ALJ a list of witnesses to be offered during the hearing and a statement describing the substance of their proposed testimony, copies of any prior

written statements or transcribed testimony of proposed witnesses, a written report of each expert witness to be called to testify that meets the requirements of Federal Rule of Civil Procedure 26(a)(2)(B), and copies of proposed hearing exhibits, including copies of any written statements that a party intends to offer instead of live direct testimony. If there are no prior written statements or transcribed testimony of a proffered witness, the party must submit a detailed factual affidavit of the proposed testimony.

(b) A party may supplement its submission under paragraph (a) of this section until 30 days before the scheduled hearing date if the ALJ determines:

(1) There are extraordinary circumstances; and

(2) There is no substantial prejudice to the objecting party.

(c) The parties must have an opportunity to object to the admission of evidence submitted under paragraph (a) of this section under a schedule set by the ALJ. However, the parties must file all objections before the final prehearing conference.

(d) If a party tries to introduce evidence after the deadlines in paragraph (a) of this section, the ALJ must exclude the offered evidence from the party's case-in-chief unless the conditions of paragraph (b) of this section are met. If the ALJ admits evidence under paragraph (b) of this section, the objecting party may file a motion to postpone all or part of the hearing to allow sufficient time to prepare and respond to the evidence. The ALJ may not unreasonably deny that motion.

(e) If a party fails to object within the time set by the ALJ and before the final prehearing conference, evidence exchanged under paragraph (a) of this section is considered authentic, relevant and material for the purpose of admissibility at the hearing.

§ 93.514 Amendment to the charge letter.

(a) The ORI may amend the findings of research misconduct up to 30 days before the scheduled hearing.

(b) The ALJ may not unreasonably deny a respondent's motion to postpone all or part of the hearing to allow sufficient time to prepare and respond to the amended findings.

§ 93.515 Actions for violating an order or for disruptive conduct.

(a) The ALJ may take action against any party in the proceeding for violating an order or procedure or for other conduct that interferes with the prompt, orderly, or fair conduct of the hearing. Any action imposed upon a party must reasonably relate to the severity and nature of the violation or disruptive conduct.

(b) The actions may include—

(1) Prohibiting a party from introducing certain evidence or otherwise supporting a particular claim or defense;

(2) Striking pleadings, in whole or in part;

(3) Staying the proceedings;

(4) Entering a decision by default;

(5) Refusing to consider any motion or other action not timely filed; or

(6) Drawing the inference that spoliated evidence was unfavorable to the party responsible for its spoliation.

§ 93.516 Standard and burden of proof.

(a) *Standard of proof*. The standard of proof is the preponderance of the evidence.

(b) *Burden of proof*. (1) ORI bears the burden of proving the findings of research misconduct. The destruction, absence of, or respondent's failure to provide research records adequately documenting the questioned research is evidence of research misconduct where ORI establishes by a preponderance of the evidence that the respondent intentionally, knowingly, or recklessly had research records and destroyed them, had the opportunity to maintain the records but did not do so, or maintained the records and failed to produce them in a timely manner and the respondent's conduct constitutes a significant departure from accepted practices of the relevant research community.

(2) The respondent has the burden of going forward with and the burden of proving, by a preponderance of the evidence, any and all affirmative defenses raised. In determining whether ORI has carried the burden of proof imposed by

this part, the ALJ shall give due consideration to admissible, credible evidence of honest error or difference of opinion presented by the respondent.

(3) ORI bears the burden of proving that the proposed HHS administrative actions are reasonable under the circumstances of the case. The respondent has the burden of going forward with and proving by a preponderance of the evidence any mitigating factors that are relevant to a decision to impose HHS administrative actions following a research misconduct proceeding.

§ 93.517 The hearing.

(a) The ALJ will conduct an in-person hearing to decide if the respondent committed research misconduct and if the HHS administrative actions, including any debarment or suspension actions, are appropriate.

(b) The ALJ provides an independent *de novo* review of the ORI findings of research misconduct and the proposed HHS administrative actions. The ALJ does not review the institution's procedures or misconduct findings or ORI's research misconduct proceedings.

(c) A hearing under this subpart is not limited to specific findings and evidence set forth in the charge letter or the respondent's request for hearing. Additional evidence and information may be offered by either party during its case-in-chief unless the offered evidence is—

(1) Privileged, including but not limited to those protected by the attorney-client privilege, attorney-work product doctrine, or Federal law or regulation.

(2) Otherwise inadmissible under §§ 93.515 or 93.519.

(3) Not offered within the times or terms of §§ 93.512 and 93.513.

(d) ORI proceeds first in its presentation of evidence at the hearing.

(e) After both parties have presented their cases-in-chief, the parties may offer rebuttal evidence even if not exchanged earlier under §§ 93.512 and 93.513.

(f) Except as provided in § 93.518(c), the parties may appear at the hearing in person or by an attorney of record in the proceeding.

(g) The hearing must be open to the public, unless the ALJ orders otherwise for good cause shown. However, even if the hearing is closed to the public, the ALJ may not exclude a party or party representative, persons whose presence a party shows to be essential to the presentation of its case, or expert witnesses.

§ 93.518 Witnesses.

(a) Except as provided in paragraph (b) of this section, witnesses must give testimony at the hearing under oath or affirmation.

(b) The ALJ may admit written testimony if the witness is available for cross-examination, including prior sworn testimony of witnesses that has been subject to cross-examination. These written statements must be provided to all other parties under § 93.513.

(c) The parties may conduct direct witness examination and cross-examination in person, by telephone, or by audio-visual communication as permitted by the ALJ. However, a respondent must always appear in-person to present testimony and for cross-examination.

(d) The ALJ may exercise reasonable control over the mode and order of questioning witnesses and presenting evidence to—

(1) Make the witness questioning and presentation relevant to deciding the truth of the matter; and

(2) Avoid undue repetition or needless consumption of time.

(e) The ALJ must permit the parties to conduct cross-examination of witnesses.

(f) Upon request of a party, the ALJ may exclude a witness from the hearing before the witness' own testimony. However, the ALJ may not exclude—

(1) A party or party representative;

(2) Persons whose presence is shown by a party to be essential to the presentation of its case; or

(3) Expert witnesses.

§ 93.519 Admissibility of evidence.

(a) The ALJ decides the admissibility of evidence offered at the hearing.

(b) Except as provided in this part, the ALJ is not bound by the Federal Rules of Evidence (FRE). However, the ALJ may apply the FRE where appropriate (e.g., to exclude unreliable evidence).

(c) The ALJ must admit evidence unless it is clearly irrelevant, immaterial, or unduly repetitious. However, the ALJ may exclude relevant and material evidence if its probative value is substantially outweighed by the danger of unfair prejudice, confusion of the issues, or by considerations of undue delay or needless presentation of cumulative evidence under FRE 401–403.

(d) The ALJ must exclude relevant and material evidence if it is privileged, including but not limited to evidence protected by the attorney-client privilege, the attorney-work product doctrine, or Federal law or regulation.

(e) The ALJ may take judicial notice of matters upon the ALJ's own initiative or upon motion by a party as permitted under FRE 201 (Judicial Notice of Adjudicative Facts).

(1) The ALJ may take judicial notice of any other matter of technical, scientific, or commercial fact of established character.

(2) The ALJ must give the parties adequate notice of matters subject to judicial notice and adequate opportunity to show that the ALJ erroneously noticed the matters.

(f) Evidence of crimes, wrongs, or acts other than those at issue in the hearing is admissible only as permitted under FRE 404(b) (Character Evidence not Admissible to Prove Conduct; Exceptions, Other Crimes).

(g) Methods of proving character are admissible only as permitted under FRE 405 (Methods of Proving Character).

(h) Evidence related to the character and conduct of witnesses is admissible only as permitted under FRE Rule 608 (Evidence of Character and Conduct of Witness).

(i) Evidence about offers of compromise or settlement made in this action is inadmissible as provided in FRE 408 (Compromise and Offers to Compromise).

(j) The ALJ must admit relevant and material hearsay evidence, unless an objecting party shows that the offered hearsay evidence is not reliable.

(k) The parties may introduce witnesses and evidence on rebuttal.

(l) All documents and other evidence offered or admitted into the record must be open to examination by both parties, unless otherwise ordered by the ALJ for good cause shown.

(m) Whenever the ALJ excludes evidence, the party offering the evidence may make an offer of proof, and the ALJ must include the offer in the transcript or recording of the hearing in full. The offer of proof should consist of a brief oral statement describing the evidence excluded. If the offered evidence consists of an exhibit, the ALJ must mark it for identification and place it in the hearing record. However, the ALJ may rely upon the offered evidence in reaching the decision on the case only if the ALJ admits it.

§ 93.520 The record.

(a) HHS will record and transcribe the hearing, and if requested, provide a transcript to the parties at HHS' expense.

(b) The exhibits, transcripts of testimony, any other evidence admitted at the hearing, and all papers and requests filed in the proceeding constitute the record for the decision by the ALJ.

(c) For good cause shown, the ALJ may order appropriate redactions made to the record at any time.

(d) The DAB may return original research records and other similar items to the parties or awardee institution upon request after final HHS action, unless under judicial review.

§ 93.521 Correction of the transcript.

(a) At any time, but not later than the time set for the parties to file their post-hearing briefs, any party may file a motion proposing material corrections to the transcript or recording.

(b) At any time before the filing of the ALJ's decision and after consideration of any corrections proposed by the parties, the ALJ may issue an order making any requested corrections in the transcript or recording.

§ 93.522 Filing post-hearing briefs.

(a) After the hearing and under a schedule set by the ALJ , the parties may file post-hearing briefs, and the ALJ may allow the parties to file reply briefs.

(b) The parties may include proposed findings of fact and conclusions of law in their post-hearing briefs.

§ 93.523 The Administrative Law Judge's ruling.

(a) The ALJ shall issue a ruling in writing setting forth proposed findings of fact and any conclusions of law within 60 days after the last submission by the parties in the case. If unable to meet the 60-day deadline, the ALJ must set a new deadline and promptly notify the parties, the Assistant Secretary for Health and the debarring official, if debarment or suspension is under review. The ALJ shall serve a copy of the ruling upon the parties and the Assistant Secretary for Health.

(b) The ruling of the ALJ constitutes a recommended decision to the Assistant Secretary for Health. The Assistant Secretary for Health may review the ALJ's recommended decision and modify or reject it in whole or in part after determining it, or the part modified or rejected, to be arbitrary and capricious or clearly erroneous. The Assistant Secretary for Health shall notify the parties of an intention to review the ALJ's recommended decision within 30 days after service of the recommended decision. If that notification is not provided within the 30-day period, the ALJ's recommended decision shall become final. An ALJ decision that becomes final in that manner or a decision by the Assistant Secretary for Health modifying or rejecting the ALJ's recommended decision in whole or in part is the final HHS action, unless debarment or suspension is an administrative action recommended in the decision.

(c) If a decision under § 93.523(b) results in a recommendation for debarment or suspension, the Assistant Secretary for Health shall serve a copy of the decision upon the debarring official and the decision shall constitute findings of fact to the debarring official in accordance with 45 CFR 76.845(c). The decision of the debarring official on debarment or suspension is the final HHS decision on those administrative actions.

SUBCHAPTER I [RESERVED]

SUBCHAPTER J—VACCINES

PART 100—VACCINE INJURY COMPENSATION

Sec.
100.1 Applicability.
100.2 Average cost of a health insurance policy.
100.3 Vaccine injury table.

AUTHORITY: Secs. 312 and 313 of Pub. L. 99–660, 100 Stat. 3779–3782 (42 U.S.C. 300aa–1 note); sec. 2114(c) and (e) of the PHS Act (42 U.S.C. 300aa–14(c) and (e)); sec. 2115(a)(3)(B) of the PHS Act (42 U.S.C. 300aa–15(a)(3)(B)); sec. 904(b) of Pub. L. 105–34, 111 Stat. 873; sec. 1503 of Pub. L. 105–277, 112 Stat. 2681–741; and sec. 523(a) of Pub. L. 106–170, 113 Stat. 1927–1928.

§ 100.1 Applicability.

This part applies to the National Vaccine Injury Compensation Program (VICP) under subtitle 2 of title XXI of the Public Health Service (PHS) Act.

[60 FR 7693, Feb. 8, 1995]

§ 100.2 Average cost of a health insurance policy.

For purposes of determining the amount of compensation under the VICP, section 2115(a)(3)(B) of the PHS Act, 42 U.S.C. 300aa–15(a)(3)(B), provides that certain individuals are entitled to receive an amount reflecting lost earnings, less certain deductions. One of the deductions is the average cost of a health insurance policy, as determined by the Secretary. The Secretary has determined that the average cost of a health insurance policy is $363.12 for 2006. This figure is calculated periodically (generally on an annual basis) using the most recent Medical Expenditure Panel Survey-Insurance Component (MEPS–IC) data available as the baseline for the average monthly cost of a health insurance policy. This baseline is adjusted by the annual percentage increase/decrease obtained from the most recent annual Kaiser Family Foundation and Health Research and Educational Trust (KFF/HRET) Employer Health Benefits survey or other authoritative source that may be more accurate or appropriate in the future. The revised amount will be effective upon its delivery by the Secretary to the United States Court of Federal Claims, and the amount will be published as a notice in the FEDERAL REGISTER periodically (generally on an annual basis).

[72 FR 36612, July 5, 2007]

§ 100.3 Vaccine injury table.

(a) In accordance with section 312(b) of the National Childhood Vaccine Injury Act of 1986, title III of Pub. L. 99–660, 100 Stat. 3779 (42 U.S.C. 300aa–1 note) and section 2114(c) of the Public Health Service Act (42 U.S.C. 300aa–14(c)), the following is a table of vaccines, the injuries, disabilities, illnesses, conditions, and deaths resulting from the administration of such vaccines, and the time period in which the first symptom or manifestation of onset or of the significant aggravation of such injuries, disabilities, illnesses, conditions, and deaths is to occur after vaccine administration for purposes of receiving compensation under the Program:

VACCINE INJURY TABLE

Vaccine	Illness, disability, injury or condition covered	Time period for first symptom or manifestation of onset or of significant aggravation after vaccine administration
I. Vaccines containing tetanus toxoid (e.g., DTaP, DTP, DT, Td, or TT).	A. Anaphylaxis or anaphylactic shock	4 hours.
	B. Brachial Neuritis	2–28 days.
	C. Any acute complication or sequela (including death) of an illness, disability, injury, or condition referred to above which illness, disability, injury, or condition arose within the time period prescribed.	Not applicable.

VACCINE INJURY TABLE—Continued

Vaccine	Illness, disability, injury or condition covered	Time period for first symptom or manifestation of onset or of significant aggravation after vaccine administration
II. Vaccines containing whole cell pertussis bacteria, extracted or partial cell pertussis bacteria, or specific pertussis antigen(s) (e.g., DTP, DTaP, P, DTP-Hib).	A. Anaphylaxis or anaphylactic shock	4 hours.
	B. Encephalopathy (or encephalitis)	72 hours.
	C. Any acute complication or sequela (including death) of an illness, disability, injury, or condition referred to above which illness, disability, injury, or condition arose within the time period prescribed.	Not applicable.
III. Measles, mumps, and rubella vaccine or any of its components (e.g., MMR, MR, M, R).	A. Anaphylaxis or anaphylactic shock	4 hours.
	B. Encephalopathy (or encephalitis)	5–15 days (not less than 5 days and not more than 15 days).
	C. Any acute complication or sequela (including death) of an illness, disability, injury, or condition referred to above which illness, disability, injury, or condition arose within the time period prescribed.	Not applicable.
IV. Vaccines containing rubella virus (e.g., MMR, MR, R).	A. Chronic arthritis	7–42 days.
	B. Any acute complication or sequela (including death) of an illness, disability, injury, or condition referred to above which illness, disability, injury, or condition arose within the time period prescribed.	Not applicable.
V. Vaccines containing measles virus (e.g., MMR, MR, M).	A. Thrombocytopenic purpura	7–30 days.
	B. Vaccine-Strain Measles Viral Infection in an immunodeficient recipient.	6 months.
	C. Any acute complication or sequela (including death) of an illness, disability, injury, or condition referred to above which illness, disability, injury, or condition arose within the time period prescribed.	Not applicable.
VI. Vaccines containing polio live virus (OPV).	A. Paralytic Polio	
	—in a non-immunodeficient recipient ..	30 days.
	—in an immunodeficient recipient	6 months.
	—in a vaccine associated community case.	Not applicable.
	B. Vaccine-Strain Polio Viral Infection	
	—in a non-immunodeficient recipient ..	30 days.
	—in an immunodeficient recipient	6 months.
	—in a vaccine associated community case.	Not applicable.
	C. Any acute complication or sequela (including death) of an illness, disability, injury, or condition referred to above which illness, disability, injury, or condition arose within the time period prescribed.	Not applicable.
VII. Vaccines containing polio inactivated virus (e.g., IPV).	A. Anaphylaxis or anaphylactic shock	4 hours
	B. Any acute complication or sequela (including death of an illness, disability, injury, or condition referred to above which illness, disability, injury, or condition arose within the time period prescribed..	Not applicable.
VIII. Hepatitis B. vaccines	A. Anaphylaxis or anaphylactic shock	4 hours.
	B. Any acute complication or sequela (including death) of an illness, disability, injury, or condition referred to above which illness, disability, injury, or condition arose within the time period prescribed.	Not applicable.
IX. Hemophilus influenzae type b polysaccharide conjugate vaccines.	No Condition Specified	Not applicable.
X. Varicella vaccine	No Condition Specified	Not applicable.
XI. Rotavirus vaccine	No condition specified	Not applicable.
XII. Pneumococcal conjugate vaccines	No condition specified.	Not applicable.

VACCINE INJURY TABLE—Continued

Vaccine	Illness, disability, injury or condition covered	Time period for first symptom or manifestation of onset or of significant aggravation after vaccine administration
XIII. Any new vaccine recommended by the Centers for Disease Control and Prevention for routine administration to children, after publication by the Secretary of a notice of coverage.	No Condition Specified	Not applicable.

(b) *Qualifications and aids to interpretation*. The following qualifications and aids to interpretation shall apply to the Vaccine Injury Table to paragraph (a) of this section:

(1) *Anaphylaxis and anaphylactic shock*. For purposes of paragraph (a) of this section, Anaphylaxis and anaphylactic shock mean an acute, severe, and potentially lethal systemic allergic reaction. Most cases resolve without sequelae. Signs and symptoms begin minutes to a few hours after exposure. Death, if it occurs, usually results from airway obstruction caused by laryngeal edema or bronchospasm and may be associated with cardiovascular collapse. Other significant clinical signs and symptoms may include the following: Cyanosis, hypotension, bradycardia, tachycardia, arrhythmia, edema of the pharynx and/or trachea and/or larynx with stridor and dyspnea. Autopsy findings may include acute emphysema which results from lower respiratory tract obstruction, edema of the hypopharynx, epiglottis, larynx, or trchea and minimal findings of eosinophilia in the liver, spleen and lungs. When death occurs within minutes of exposure and without signs of respiratory distress, there may not be significant pathologic findings.

(2) *Encephalopathy*. For purposes of paragraph (a) of this section, a vaccine recipient shall be considered to have suffered an encephalopathy only if such recipient manifests, within the applicable period, an injury meeting the description below of an acute encephalopathy, and then a chronic encephalopathy persists in such person for more than 6 months beyond the date of vaccination.

(i) An acute encephalopathy is one that is sufficiently severe so as to require hospitalization (whether or not hospitalization occurred).

(A) *For children less than 18 months of age* who present without an associated seizure event, an acute encephalopathy is indicated by a significantly decreased level of consciousness lasting for at least 24 hours. Those children less than 18 months of age who present following a seizure shall be viewed as having an acute encephalopathy if their significantly decreased level of consciousness persists beyond 24 hours and cannot be attributed to a postictal state (seizure) or medication.

(B) *For adults and children 18 months of age or older*, an acute encephalopathy is one that persists for at least 24 hours and characterized by at least two of the following:

(*1*) A significant change in mental status that is not medication related; specifically a confusional state, or a delirium, or a psychosis;

(*2*) A significantly decreased level of consciousness, which is independent of a seizure and cannot be attributed to the effects of medication; and

(*3*) A seizure associated with loss of consciousness.

(C) Increased intracranial pressure may be a clinical feature of acute encephalopathy in any age group.

(D) A ''significantly decreased level of consciousness'' is indicated by the presence of at least one of the following clinical signs for at least 24 hours or greater (see paragraphs (b)(2)(i)(A) and (b)(2)(i)(B) of this section for applicable timeframes):

(*1*) Decreased or absent response to environment (responds, if at all, only to loud voice or painful stimuli);

(*2*) Decreased or absent eye contact (does not fix gaze upon family members or other individuals); or

(*3*) Inconsistent or absent responses to external stimuli (does not recognize familiar people or things).

(E) The following clinical features alone, or in combination, do not demonstrate an acute encephalopathy or a significant change in either mental status or level of consciousness as described above: Sleepiness, irritability (fussiness), high-pitched and unusual screaming, persistent inconsolable crying, and bulging fontanelle. Seizures in themselves are not sufficient to constitute a diagnosis of encephalopathy. In the absence of other evidence of an acute encephalopathy, seizures shall not be viewed as the first symptom or manifestation of the onset of an acute encephalopathy.

(ii) *Chronic Encephalopathy* occurs when a change in mental or neurologic status, first manifested during the applicable time period, persists for a period of at least 6 months from the date of vaccination. Individuals who return to a normal neurologic state after the acute encephalopathy shall not be presumed to have suffered residual neurologic damage from that event; any subsequent chronic encephalopathy shall not be presumed to be a sequela of the acute encephalopathy. If a preponderance of the evidence indicates that a child's chronic encephalopathy is secondary to genetic, prenatal or perinatal factors, that chronic encephalopathy shall not be considered to be a condition set forth in the Table.

(iii) An encephalopathy shall not be considered to be a condition set forth in the Table if in a proceeding on a petition, it is shown by a preponderance of the evidence that the encephalopathy was caused by an infection, a toxin, a metabolic disturbance, a structural lesion, a genetic disorder or trauma (without regard to whether the cause of the infection, toxin, trauma, metabolic disturbance, structural lesion or genetic disorder is known). If at the time a decision is made on a petition filed under section 2111(b) of the Act for a vaccine-related injury or death, it is not possible to determine the cause by a preponderance of the evidence of an encephalopathy, the encephalopathy shall be considered to be a condition set forth in the Table.

(iv) In determining whether or not an encephalopathy is a condition set forth in the Table, the Court shall consider the entire medical record.

(3) [Reserved]

(4) *Seizure and convulsion.* For purposes of paragraphs (b) (2) of this section, the terms, ''seizure'' and ''convulsion'' include myoclonic, generalized tonic-clonic (grand mal), and simple and complex partial seizures. Absence (petit mal) seizures shall not be considered to be a condition set forth in the Table. Jerking movements or staring episodes alone are not necessarily an indication of seizure activity.

(5) *Sequela.* The term ''sequela'' means a condition or event which was actually caused by a condition listed in the Vaccine Injury Table.

(6) *Chronic Arthritis.* (i) For purposes of paragraph (a) of this section, chronic arthritis may be found in a person with no history in the 3 years prior to vaccination of arthropathy (joint disease) on the basis of:

(A) Medical documentation, recorded within 30 days after the onset, of objective signs of acute arthritis (joint swelling) that occurred between 7 and 42 days after a rubella vaccination;

(B) Medical documentation (recorded within 3 years after the onset of acute arthritis) of the persistence of objective signs of intermittent or continuous arthritis for more than 6 months following vaccination; and

(C) Medical documentation of an antibody response to the rubella virus.

(ii) For purposes of paragraph (a) of this section, the following shall not be considered as chronic arthritis: Musculoskeletal disorders such as diffuse connective tissue diseases (including but not limited to rheumatoid arthritis, juvenile rheumatoid arthritis, systemic lupus erythematosus, systemic sclerosis, mixed connective tissue disease, polymyositis/determatomyositis, fibromyalgia, necrotizing vascultitis and vasculopathies and Sjogren's Syndrome), degenerative joint disease, infectious agents other than rubella (whether by direct invasion or as an immune reaction) metabolic and endocrine diseases, trauma, neoplasms, neuropathic disorders, bone and cartilage disorders and arthritis associated with

ankylosing spondylitis, psoriasis, inflammatory bowel disease, Reiter's syndrome, or blood disorders.

(iii) Arthralgia (joint pain) or stiffness without joint swelling shall not be viewed as chronic arthritis for purposes of paragraph (a) of this section.

(7) *Brachial neuritis.* (i) This term is defined as dysfunction limited to the upper extremity nerve plexus (i.e., its trunks, divisions, or cords) without involvement of other peripheral (e.g., nerve roots or a single peripheral nerve) or central (e.g., spinal cord) nervous system structures. A deep, steady, often severe aching pain in the shoulder and upper arm usually heralds onset of the condition. The pain is followed in days or weeks by weakness and atrophy in upper extremity muscle groups. Sensory loss may accompany the motor deficits, but is generally a less notable clinical feature. The neuritis, or plexopathy, may be present on the same side as or the opposite side of the injection; it is sometimes bilateral, affecting both upper extremities.

(ii) Weakness is required before the diagnosis can be made. Motor, sensory, and reflex findings on physical examination and the results of nerve conduction and electromyographic studies must be consistent in confirming that dysfunction is attributable to the brachial plexus. The condition should thereby be distinguishable from conditions that may give rise to dysfunction of nerve roots (i.e., radiculopathies) and peripheral nerves (i.e., including multiple monoeuropathies), as well as other peripheral and central nervous system structures (e.g., cranial neuropathies and myelopathies).

(8) *Thrombocytopenic purpura.* This term is defined by a serum platelet count less than 50,000/mm^3. Thrombocytopenic purpura does not include cases of thrombocytopenia associated with other causes such as hypersplenism, autoimmune disorders (including alloantibodies from previous transfusions) myelodysplasias, lymphoproliferative disorders, congenital thrombocytopenia or hemolytic uremic syndrome. This does not include cases of immune (formerly called idiopathic) thrombocytopenic purpura (ITP) that are mediated, for example, by viral or fungal infections, toxins or drugs. Thrombocytopenic purpura does not include cases of thrombocytopenia associated with disseminated intravascular coagulation, as observed with bacterial and viral infections. Viral infections include, for example, those infections secondary to Epstein Barr virus, cytomegalovirus, hepatitis A and B, rhinovirus, human immunodeficiency virus (HIV), adenovirus, and dengue virus. An antecedent viral infection may be demonstrated by clinical signs and symptoms and need not be confirmed by culture or serologic testing. Bone marrow examination, if performed, must reveal a normal or an increased number of megakaryocytes in an otherwise normal marrow.

(9) *Vaccine-strain measles viral infection.* This term is defined as a disease caused by the vaccine-strain that should be determined by vaccine-specific monoclonal antibody or polymerase chain reaction tests.

(10) *Vaccine-strain polio viral infection.* This term is defined as a disease caused by poliovirus that is isolated from the affected tissue and should be determined to be the vaccine-strain by oligonucleotide or polymerase chain reaction. Isolation of poliovirus from the stool is not sufficient to establish a tissue specific infection or disease caused by vaccine-strain poliovirus.

(c) *Coverage provisions.* (1) Except as provided in paragraph (c)(2), (3) or (4) of this section, the revised Table of Injuries set forth in paragraph (a) of this section and the Qualifications and Aids to Interpretation set forth in paragraph (b) of this section apply to petitions for compensation under the Program filed with the United States Court of Federal Claims on or after March 24, 1997. Petitions for compensation filed before such date shall be governed by section 2114(a) and (b) of the Public Health Service Act as in effect on January 1, 1995, or by § 100.3 as in effect on March 10, 1995 (see 60 FR 7678, *et seq.*, February 8, 1995), as applicable.

(2) Hepatitis B, Hib, and varicella vaccines (Items VIII, IX, and X of the Table) are included in the Table as of August 6, 1997.

(3) Rotavirus vaccines (Item XI of the Table) are included in the Table as of October 22, 1998.

(4) Pneumococcal conjugate vaccines (Item XII of the Table) are included in the Table as of December 18, 1999.

(5) Other new vaccines (Item XIII of the Table) will be included in the Table as of the effective date of a tax enacted to provide funds for compensation paid with respect to such vaccines. An amendment to this section will be published in the FEDERAL REGISTER to announce the effective date of such a tax.

[60 FR 7694, Feb. 8, 1995, as amended at 62 FR 7688, Feb. 20, 1997; 62 FR 10626, Mar. 7, 1997; 63 FR 25778, May 11, 1998; 64 FR 40518, July 27, 1999; 67 FR 48559, July 25, 2002; 73 FR 59530, Oct. 9, 2008]

PART 102—SMALLPOX COMPENSATION PROGRAM

Sec.
102.1 Purpose.
102.2 Summary of available benefits.
102.3 Definitions.

Subpart B—Persons Eligible To Receive Benefits

102.10 Eligible requesters.
102.11 Survivors.

Subpart C—Covered Injuries

102.20 How to establish a covered injury.
102.21 Smallpox (Vaccinia) Vaccine Injury Table.
102.22–102.29 [Reserved]

Subpart D—Available Benefits

102.30 Benefits available to different categories of requesters under this program.
102.31 Medical benefits.
102.32 Benefits for lost employment income.
102.33 Death benefits.

Subpart E—Procedures for Filing Request Packages

102.40 How to obtain forms and instructions.
102.41 How to file a Request Package.
102.42 Deadlines for filing request forms.
102.43 Deadlines for submitting documentation.
102.44 Representatives of requesters.
102.45 Multiple survivors.
102.46 Amending a request package.

Subpart F—Required Documentation To Be Deemed Eligible

102.50 Medical records necessary to establish that a covered injury was sustained.
102.51 Documentation a smallpox vaccine recipient must submit to be deemed eligible by the Secretary.
102.52 Documentation a vaccinia contact must submit to be deemed eligible by the Secretary.
102.53 Documentation a survivor must submit to be deemed eligible by the Secretary.
102.54 Documentation the representative of the estate of a deceased smallpox vaccine recipient or vaccinia contact must submit to be deemed eligible by the Secretary.

Subpart G—Required Documentation for Eligible Requesters To Receive Benefits

102.60 Documentation an eligible requester seeking medical benefits must submit.
102.61 Documentation an eligible requester seeking benefits for lost employment income must submit.
102.62 Documentation an eligible requester seeking a death benefit must submit.
102.63 Documentation a representative filing on behalf of an eligible requester who is a minor or a legally incompetent adult must submit.

Subpart H—Secretarial Determinations

102.70 Determinations the Secretary must make before benefits can be paid.
102.71 Insufficient documentation for eligibility and benefits determinations.
102.72 Sufficient documentation for eligibility and benefits determinations.
102.73 Approval of benefits.
102.74 Disapproval of benefits.

Subpart I—Calculation and Payment of Benefits

102.80 Calculation of medical benefits.
102.81 Calculation of benefits for lost employment income.
102.82 Calculation of death benefits.
102.83 Payment of all benefits.
102.84 The Secretary's right to recover benefits paid under this program from third-party payors.

Subpart J—Reconsideration of the Secretary's Determinations.

102.90 Reconsideration of the Secretary's eligibility and benefits determinations.
102.91 Secretary's review authority.
102.92 No additional judicial or administrative review of determinations made under this part.

AUTHORITY: 42 U.S.C. 216, 42 U.S.C. 239–239h.

SOURCE: 68 FR 51497, Aug. 27, 2003, unless otherwise noted.

Subpart A—General Provisions

SOURCE: 68 FR 70093, Dec. 16, 2003, unless otherwise noted.

§ 102.1 Purpose.

This part implements Section 2 of the Smallpox Emergency Personnel Protection Act of 2003 (the Act). The Act directs the Secretary of Health and Human Services to establish procedures for providing benefits to certain individuals who sustained a covered injury as the direct result of the administration of the smallpox vaccine or other covered countermeasure, and to certain individuals who sustained a covered injury as the direct result of accidental vaccinia inoculation through contact with certain persons vaccinated with the smallpox vaccine or with individuals accidentally inoculated by them. Also, if the Secretary determines that an individual died as a result of a covered injury, the Act provides for certain survivors of that individual to receive death benefits.

§ 102.2 Summary of available benefits.

(a) The Act authorizes three forms of benefits to requesters deemed eligible by the Secretary:

(1) Payment or reimbursement for reasonable and necessary medical services and items to diagnose or treat a covered injury or its health complications, as described in § 102.31.

(2) Lost employment income incurred as a result of a covered injury, as described in § 102.32.

(3) Death payments to survivors if the Secretary determines that the death of the smallpox vaccine recipient or vaccinia contact was the direct result of a covered injury, as described in § 102.33.

(b) The benefits paid under the Program, with the exception of death benefits paid under § 102.82(c), are secondary to any obligation of any third-party payor to pay for such benefits. Death benefits paid under § 102.82(c) are secondary to death and disability benefits under the PSOB Program. The benefits paid under the Program usually will only be paid after the requester has pursued all other available coverage from all third-party payors with an obligation to pay for or provide such benefits (e.g., medical insurance for medical items, workers' compensation program(s) for lost employment income). However, as provided in § 102.84, the Secretary has the discretion to pay benefits under this Program before a potential third-party payor makes a determination on the availability of similar benefits and has the right to later pursue a claim against any third-party payor with a legal or contractual obligation to pay for, or provide, such benefits.

§ 102.3 Definitions.

This section defines certain words and phrases found throughout this part. Words and phrases that are used only in limited situations are defined in specific sections of this part.

(a) *Accidental vaccinia inoculation* means the transfer of vaccinia virus from an existing vaccination site (the skin surface where the vaccinia virus entered the body through vaccination) or inoculation site (the skin or mucous membrane surface where the vaccinia virus entered the body through means other than vaccination) on a person to a second person, resulting in a contact case.

(b) *Act* means the Smallpox Emergency Personnel Protection Act of 2003, Pub. L. 108–20, 117 Stat. 638.

(c) *Approval* means a decision by the Secretary that the requester will be paid benefits under the Program.

(d) *Benefits* means benefits and/or compensation.

(e) *Child* means any natural, illegitimate, adopted, or posthumous child or stepchild of a deceased smallpox vaccine recipient or vaccinia contact who, at the time of the recipient or contact's death is:

(1) 18 years of age or under; or

(2) Over 18 years of age and a student as defined in section 8101 of title 5, United States Code; or

(3) Over 18 years of age and incapable of self-support because of physical or mental disability.

(f) *Contact case* means a case in which a person developed an initial vaccinial lesion or vaccinial infection through an exposure other than being vaccinated him/herself.

(g) *Covered countermeasure* means smallpox (vaccinia) vaccines, cidofovir

and its derivatives, or Vaccinia Immune Globulin, when used to prevent or treat the smallpox disease or control or treat the adverse effects of vaccinia vaccination or inoculation or of the administration of another countermeasure.

(h) *Covered injury* means an injury determined by the Secretary, in accordance with subpart C of this part, to be:

(1) An injury meeting the requirements of the Table, which is presumed to be the direct result of the administration of a smallpox vaccine or accidental vaccinia inoculation; or

(2) More likely than not, the direct result of:

(i) The administration of a covered countermeasure (including the smallpox vaccine) during the effective period of the Declaration, in the case of a smallpox vaccine recipient; or

(ii) Vaccinia contracted through accidental vaccinia inoculation (and not the result of receiving a smallpox vaccine) during the effective period of the Declaration (or within 30 days after the end of such period), in the case of a vaccinia contact.

(i) *Declaration* means the Declaration Regarding Administration of Smallpox Countermeasures issued by the Secretary on January 24, 2003, and published in the FEDERAL REGISTER on January 28, 2003 (68 FR 4212).

(j) *Dependent* means a person who would be considered a dependent by the Internal Revenue Service.

(k) *Disapproval* means a decision by the Secretary that the requester will not be paid benefits under the Program.

(l) *Effective period of the Declaration* means the time span specified in the Declaration, as amended by the Secretary.

(m) *FECA Program* means the workers' compensation benefits program for civilian officers and employees of the Federal Government established under the Federal Employees' Compensation Act (5 U.S.C. 8101 *et seq.*), as amended, and implemented by the United States Department of Labor in regulations codified at 20 CFR part 10, as amended.

(n) *Health care practitioner* means a health care provider licensed by a State and authorized to diagnose and prescribe medications and other treatments or authorized to provide primary or specialty care.

(o) *Injury* means an injury (including death), disability, illness, or condition.

(p) *Legally incompetent* means a person who is considered to lack legal capacity under applicable State law.

(q) *Program* means the Smallpox Vaccine Injury Compensation Program.

(r) *Public Safety Officers' Benefits Program (PSOB Program)* means the Program established under subpart 1 of part L of title I of the Omnibus Crime Control and Safe Streets Act of 1968 (42 U.S.C. 3796 *et seq.*), as amended, and implemented by the United States Department of Justice in regulations codified at 28 CFR part 32, as amended.

(s) *Requester* means a smallpox vaccine recipient, vaccinia contact, survivor, or representative of the estate of a deceased smallpox vaccine recipient or vaccinia contact (on behalf of the estate) who files a Request Package, or on whose behalf a Request Package is filed, under this part.

(t) *Request Form* means the form designated by the Secretary as the request form for purposes of this part.

(u) *Request Package* means the Request Form, all documentation submitted by or on behalf of the requester, and all documentation obtained by the Secretary as authorized by or on behalf of the requester for determinations of eligibility and benefits under this part.

(v) *Secretary* means the Secretary of Health and Human Services and any other officer or employee of the Department of Health and Human Services to whom the authority involved has been delegated.

(w) *Smallpox emergency response plan* means a State, local, or Department of Health and Human Services plan, approved by the Secretary, detailing actions to be taken in preparation for a possible smallpox-related emergency during the period prior to the identification of an active case of smallpox either within or outside the United States.

(x) *Smallpox (Vaccinia) Vaccine Injury Table* or *Table* or *Table of Injuries* means the table of injuries included at § 102.21, including the definitions and requirements set forth at § 102.21(b).

(y) *Smallpox vaccine recipient* means a person:

(1) Who has been a health care worker, law enforcement officer, firefighter, security personnel, emergency medical personnel, other public safety personnel, or support personnel for such occupational specialties who has volunteered and been selected to be a member of a smallpox emergency response plan prior to the time at which the Secretary publicly announces that an active case of smallpox has been identified within or outside of the United States;

(2) Who is or will be functioning in a role identified in a smallpox emergency response plan;

(3) To whom a smallpox vaccine is administered pursuant to a smallpox emergency response plan during the effective period of the Declaration; and

(4) Who sustained a covered injury.

(z) *State* means any State of the United States of America, the District of Columbia, United States territories, commonwealths, and possessions, the Republic of the Marshall Islands, the Republic of Palau, and the Federated States of Micronesia.

(aa) *Survivor* means a survivor of a deceased smallpox vaccine recipient or vaccinia contact meeting the requirements of § 102.11.

(bb) *Third-party payor* means the United States (other than for payments of benefits under this Program) or any other third-party, including any State or local governmental entity, private insurance carrier, or employer, with a legal or contractual obligation to pay for or provide benefits.

(cc) *Vaccinia contact* means an individual who:

(1) Contracted vaccinia during the effective period of the Declaration (or within 30 days after the end of such period);

(2) Prior to contracting vaccinia, was accidentally inoculated by a person:

(i) Meeting the criteria set forth in § 102.3(x)(1)–(3) (a person meeting the definition of a smallpox vaccine recipient, except for the requirement that the person sustained a covered injury); or

(ii) Who was accidentally inoculated by a person meeting the criteria set forth in § 102.3(x)(1)–(3) (a person meeting the definition of a smallpox vaccine recipient, except for the requirement that the person sustained a covered injury); and

(3) Sustained a covered injury.

[68 FR 70093, Dec. 16, 2003; 69 FR 7376, Feb. 17, 2004, as amended at 71 FR 29810, May 24, 2006]

Subpart B—Persons Eligible To Receive Benefits

SOURCE: 68 FR 70093, Dec. 16, 2003, unless otherwise noted.

§ 102.10 Eligible requesters.

(a) The following requesters may, as determined by the Secretary, be eligible to receive benefits from this Program:

(1) Smallpox vaccine recipients, as described in § 102.3(x);

(2) Vaccinia contacts, as described in § 102.3(bb); or

(3) Survivors, as described in § 102.3(z) and § 102.11.

(4) Representatives of the estates of deceased smallpox vaccine recipients or vaccinia contacts (*i.e.*, individuals authorized to act on behalf of the deceased person's estate under applicable state law, such as an executor).

(b) If a smallpox vaccine recipient or vaccinia contact dies, his or her survivor(s) or the representative of his or her estate may file a new Request Package (or Request Package(s)) or amend a previously filed Request Package. A new Request Package may be filed whether or not a Request Package was previously submitted by or on behalf of the deceased person, but must be filed within the filing deadlines described in § 102.42. Amendments to previously filed Request Packages and the filing deadlines for such amendments are described in § 102.46.

(c) The benefits available to different categories of requesters are described in § 102.30.

§ 102.11 Survivors.

(a) *Survivors of individuals who died as the direct result of a covered injury.* If the Secretary determines that a smallpox vaccine recipient or vaccinia contact died as the direct result of a covered injury (or injuries), his or her survivor(s) may be eligible for death benefits.

(b) *Survivors who may be eligible to receive benefits and order of priority for benefits.* (1) The Act uses the same categories of survivors and order of priority for benefits as established and defined by the PSOB Program, except as provided in paragraphs (b)(3), (b)(4), and (b)(5) of this section.

(2) The PSOB Program's categories of survivors (known in the PSOB Program as beneficiaries) and order of priority for receipt of death benefits are detailed under subpart 1 of part L of title I of the Omnibus Crime Control and Safe Streets Act of 1968 (42 U.S.C. 3796 *et seq.*), as amended, as implemented in 28 CFR part 32, as amended.

(3) In the PSOB Program, the person who is survived must satisfy the eligibility requirements for a deceased public safety officer, whereas the person who is survived under this Program must be a deceased smallpox vaccine recipient or vaccinia contact who would otherwise have been eligible under this part.

(4) Unlike the PSOB Program, if there are no survivors eligible to receive death benefits under the PSOB Program (as set forth in paragraph (b)(2) of this section), the legal guardian of a deceased minor who was a smallpox vaccine recipient or vaccinia contact may be eligible as a survivor under this Program. Such legal guardianship must be determined by a court of competent jurisdiction under applicable State law.

(5) A surviving dependent younger than the age of 18 whose legal guardian opts to receive a death benefit under the alternative calculation on the dependent's behalf will have the same priority as surviving eligible children under the PSOB Program (consistent with paragraph (b)(2) of this section) even if the dependent is not the surviving eligible child of the deceased person for purposes of the PSOB Program. However, such a dependent may only be eligible to receive benefits under the alternative death benefits calculation, described in § 102.82(d), and is not eligible to receive death benefits under the standard calculation described in § 102.82(c). Because death benefits paid under the alternative calculation will be paid to the dependents' legal guardian(s) on behalf of all such dependents, the Secretary will not divide or apportion such benefits among the dependents.

(6) Any change in the order of priority of survivors or of the eligible category of survivors under the PSOB Program shall apply to requesters seeking death benefits under this Program on the effective date of the change, even prior to any corresponding amendment to this part. Such changes will apply to Request Packages pending with the Program on the effective date of the change, as well as to requests filed after that date.

Subpart C—Covered Injuries

§ 102.20 How to establish a covered injury.

(a) *General.* In order to receive benefits under the Program, a requester must submit documentation showing that a covered injury, as described in § 102.3(g), was sustained. A requester can establish that a covered injury was sustained by demonstrating to the Secretary that a Table injury occurred, as described in paragraph (c) of this section. In the alternative, a requester can establish that an injury was actually caused by a covered countermeasure or accidental vaccinia inoculation, as described in paragraph (d) of this section. The Secretary will consider all relevant medical and scientific evidence, such as medical records and documentation submitted by the requester, when determining whether a covered injury was established. In addition, the Secretary may obtain the views of qualified medical experts in making determinations concerning covered injuries. As set forth in the definition of covered countermeasures, if a covered injury is related to the administration of a covered countermeasure, the countermeasure must have been administered to prevent or treat the smallpox disease or to control or treat the adverse effects of vaccinia vaccination or inoculation or of the administration of another countermeasure. The time periods described in this part for receiving a covered countermeasure (during the effective period of the Declaration) or for vaccinia contracted from accidental

vaccinia inoculation (during the effective period of the Declaration or within 30 days after the end of such period) in relation to a covered injury must also be met.

(b) *Minor injuries.* Any injuries that the Secretary deems minor will not be considered covered injuries. Minor injuries include expected and routine responses to the smallpox vaccine, other covered countermeasures, or accidental vaccinia inoculation that are not severe (e.g., minor scarring or minor local reactions, for instance a mild systemic illness with a generalized maculopapular rash that resolves quickly).

(c) *Table injuries.* A requester may establish that a covered injury occurred by demonstrating that a smallpox vaccine recipient or vaccinia contact sustained an injury listed on the Smallpox (Vaccinia) Vaccine Injury Table, set forth in § 120.21, within the time interval listed on the Table and as defined by the Table's Definitions and Requirements, set forth in § 120.21(b). In such circumstances, the requester need not demonstrate the cause of the injury because the Secretary will presume, only for purposes of making determinations under this subpart, that the injury was the direct result of the administration of a smallpox vaccine or exposure to vaccinia. Even if the Table requirements are satisfied, however, an injury will not be considered a covered injury if the Secretary determines, based upon his review of the evidence, that a source other than the smallpox vaccine or exposure to vaccinia more likely than not caused the injury. In such circumstances, the Table presumption will be rebutted.

(d) *Injuries for which causation must be proven.* If an injury is not included on the Table or if a requester is unable to meet all of the Table requirements with respect to an injury included on the Table (e.g., the first symptom or manifestation of onset of the injury within the time interval included on the Table), a requester may establish a covered injury by proving causation. To establish that a covered countermeasure or accidental vaccinia inoculation caused an injury, the requester must demonstrate, by a preponderance of the evidence (more likely than not), that:

(1) In the case of a smallpox vaccine recipient, he or she sustained an injury as the direct result of the administration of a covered countermeasure (including the smallpox vaccine) during the effective period of the Declaration; or

(2) In the case of a vaccinia contact, he or she sustained an injury as the direct result of vaccinia contracted through accidental vaccinia inoculation from a person described in § 102.3(bb)(2) (a person meeting the definition of a smallpox vaccine recipient, except that the person need not sustain a covered injury, or the contact of such a person), and not as the result of receiving a smallpox vaccine. Such vaccinia must have been contracted during the effective period of the Declaration (or within 30 days after the end of such period). The Secretary will consider an injury that resulted from the administration of a covered countermeasure (other than the smallpox vaccine) to be the direct result of vaccinia contracted through accidental vaccinia inoculation if the covered countermeasure was administered as a result of such vaccinia.

[68 FR 70093, Dec. 16, 2003, as amended at 71 FR 29810, May 26, 2006]

§ 102.21 Smallpox (Vaccinia) Vaccine Injury Table.

(a) SMALLPOX (VACCINIA) VACCINE INJURY TABLE

Injury (illness, disability, injury, or condition)	Time interval for first symptom or manifestation of onset of injury after: (1) administration of smallpox (vaccinia) vaccine in recipients (R); or (2) exposure to vaccinia in contacts (C). Please note that these time intervals do not refer to time periods for the date of diagnosis of the injury.
1. Significant Local Skin Reaction	R or C: 1–21 days.
2. Stevens-Johnson Syndrome	R or C: 1–21 days.
3. Inadvertent Inoculation	R or C: 1–21 days.
4. Generalized Vaccinia	R or C: 1–21 days.

(a) SMALLPOX (VACCINIA) VACCINE INJURY TABLE—Continued

Injury (illness, disability, injury, or condition)	Time interval for first symptom or manifestation of onset of injury after: (1) administration of smallpox (vaccinia) vaccine in recipients (R); or (2) exposure to vaccinia in contacts (C). Please note that these time intervals do not refer to time periods for the date of diagnosis of the injury.
5. Eczema Vaccinatum	R or C: 1–21 days.
6. Progressive Vaccinia	R or C: 1–21 days.
7. Postvaccinial Encephalopathy, Encephalitis or Encephalomyelitis.	R or C: 1–21 days.
8. Fetal Vaccinia	Maternal R or C: any time in gestation until 7 days after birth.
9. Secondary Infection	R or C: 0–30 days.
10. Anaphylaxis or Anaphylactic Shock	R: 0–4 hours. C: Not Covered.
11. Vaccinial Myocarditis, Pericarditis, or Myopericarditis.	R or C: 1–21 days.
12. Death resulting from an injury referred to above in which the injury arose within the time interval referred to above (except as specifically provided in specified paragraph (b) of this section).	R or C: No time interval specified.

(b) *Table definitions and requirements.* The Table Definitions that follow shall apply to, define and describe the scope of, and be read in conjunction with paragraph (a) of this section.

(1) *Significant local skin reaction*—(i) *Definition.* Significant local skin reaction is, for purposes of the Table, an unexpected and extreme response at the vaccination or inoculation site that results in a significant scar that is serious enough to require surgical intervention. The onset of this injury is the initial skin lesion at the vaccination or inoculation site that generally occurs with smallpox vaccinations or inoculations. Minor scarring or minor local reactions do not constitute a Table injury. Even a robust take, defined as an area of redness at the vaccination site that exceeds 7.5 cm in diameter with associated swelling, warmth and pain, in general is considered an expected response to the vaccination or inoculation. A robust take does not in itself constitute a Table injury, even when the redness and swelling involves the entire upper arm with associated enlargement and tenderness of the glands (lymph nodes) in the underarm (axilla).

(ii) *Table requirements.* A Table injury for a significant local skin reaction in a recipient or contact requires sufficient evidence in the medical records of the occurrence of a significant local skin reaction at the vaccination or inoculation site and a permanent, disfiguring scar that resulted from the significant local skin reaction. The scar must be of sufficient severity to require surgical intervention to correct a significant cosmetic (e.g., keloid) or functional (e.g., contracture) deformity and such surgery must be included in the treatment plan documented in the medical records.

(2) *Stevens-Johnson Syndrome (SJS)*—(i) *Definition.* SJS (sometimes called erythema multiforme major) is an acute hypersensitivity reaction that affects skin, mucous membranes, and sometimes internal organs (systemic toxicity). For purposes of the Table, both skin and mucous membrane rash or lesions must be present and the rash or lesions may not cover less than ten percent of body surface area. In SJS, mucosal involvement generally predominates. Mucosal lesions generally occur at more than one location and manifest as painful lesions in sites such as the mouth or eyes. Skin rash or lesions in SJS usually consist of red raised areas (erythematous macules), blisters, and ulcerations.

(ii) *Table requirements.* A Table injury for SJS in a recipient or contact requires sufficient evidence in the medical records of the occurrence of SJS. The SJS, or related complications, must be of sufficient severity to require inpatient hospitalization.

(3) *Inadvertent Inoculation (II)*—(i) *Definition.* II is the spread of vaccinia virus from an existing vaccination or inoculation site to a second location usually by scratching the vaccination or inoculation site and subsequently spreading the virus, which produces a

new vaccinial lesion on the same person. Alternatively, II is the spread of vaccinia virus from an existing vaccination or inoculation site to another person usually by scratching an existing vaccination or inoculation site and subsequently spreading the virus, resulting in a contact case.

(ii) *Table requirements.* A Table injury for II in a recipient or contact requires sufficient evidence in the medical records of the occurrence of II and the occurrence of one of the following:

(A) Eye lesions, e.g., vaccinial keratitis or vaccinial blepharitis, that resulted from II and that led to a permanent sequela, e.g., decrease in visual acuity;

(B) Permanent and disfiguring scar(s) that resulted from II. The scar(s) must be of sufficient severity to require surgical intervention to correct a significant cosmetic (e.g., keloid) or functional (e.g., contracture) deformity and such surgery must be included in the treatment plan documented in the medical records; or

(C) Acute II or related complications of sufficient severity to require inpatient hospitalization.

(4) *Generalized Vaccinia (GV)*—(i) *Definition.* GV is a vaccinial infection that occurs from the spread of vaccinia from an existing vaccination or inoculation site to otherwise normal skin, resulting in multiple new areas of vaccinial rash or lesions. The vaccinia is believed to be spread through the blood. The rash or lesions are characterized by multiple blisters (vesicles or pustules) that generally evolve in a similar sequence or manner as the original vaccination or inoculation site.

(ii) *Table requirements.* A Table injury for GV in a recipient or contact requires sufficient evidence in the medical records of the occurrence of GV and the occurrence of one of the following:

(A) Permanent and disfiguring scar(s) that resulted from GV. The scar(s) must be of sufficient severity to require surgical intervention to correct a significant cosmetic (e.g., keloid) or functional (e.g., contracture) deformity and such surgery must be included in the treatment plan documented in the medical records; or

(B) Acute GV or related complications of sufficient severity to require inpatient hospitalization.

(5) *Eczema Vaccinatum (EV)*—(i) *Definition.* EV is the transmission or the spread of vaccinia virus from a vaccination or inoculation site to skin that has been affected by, or is currently affected with, eczema or atopic dermatitis. EV is characterized by lesions that include multiple blisters (vesicles or pustules), which generally evolve in a similar sequence or manner as the original vaccination or inoculation site. The lesions may come together to form larger lesions. Lesions may also spread to patches of skin that have never been involved with eczema or atopic dermatitis. A person with EV may be quite ill with signs and symptoms that involve the whole body (systemic illness), such as fever, malaise, or enlarged glands (lymph nodes).

(ii) *Table requirements.* A Table injury for EV in a recipient or contact requires sufficient evidence in the medical records of the occurrence of EV and the occurrence of one of the following:

(A) Permanent and disfiguring scar(s) that resulted from EV. The scar(s) must be of sufficient severity to require surgical intervention to correct a significant cosmetic (e.g., keloid) or functional (e.g., contracture) deformity and such surgery must be included in the treatment plan documented in the medical records; or

(B) Acute EV or related complications of sufficient severity to require inpatient hospitalization.

(6) *Progressive Vaccinia (PV)*—(i) *Definition.* PV is the failure to initiate the healing process in an initial vaccination or inoculation site by 21 days after exposure to vaccinia with progressive ulceration or necrosis at the vaccination or inoculation site leading to a large destructive ulcer. PV is seen in people with an impaired immune system (immunocompromised) and is characterized by a complete or near complete lack of inflammation or absence of inflammatory cells in the dermis of the skin at the vaccination or inoculation site. The diagnosis of PV may be made before 21 days after exposure, especially in a known immunocompromised individual who

develops a lesion at the vaccination or inoculation site. PV may spread through the blood to any location in the body. Any person who initiates a significant healing process of the vaccination or inoculation site by 21 days after receipt of the smallpox vaccine or exposure to vaccinia does not have PV.

(ii) *Table requirements.* A Table injury for PV in a recipient or contact requires sufficient evidence in the medical records of the occurrence of PV and the occurrence of one of the following:

(A) Permanent and disfiguring scar(s) that resulted from PV. The scar(s) must be of sufficient severity to require surgical intervention to correct a significant cosmetic (e.g., keloid) or functional (e.g., contracture) deformity and such surgery must be included in the treatment plan documented in the medical records; or

(B) Acute PV or related complications of sufficient severity to require inpatient hospitalization.

(7) *Postvaccinial Encephalopathy, Encephalitis or Encephalomyelitis (PVEM)*—(i) *Definition.* PVEM is, for the purposes of the Table, an autoimmune central nervous system injury. In rare cases, the vaccinia virus is isolated from the central nervous system. Manifestations usually occur abruptly and may include fever, vomiting, loss of appetite (anorexia), headache, general malaise, impaired consciousness, confusion, disorientation, delirium, drowsiness, seizures, language difficulties (aphasia), coma, muscular incoordination (ataxia), urinary incontinence, urinary retention, and clinical signs consistent with inflammation of the spinal cord (myelitis) such as paralysis or meningismus. Long term central nervous system impairments such as paralysis, seizure disorders, or developmental delays are known to occur as sequelae of the acute PVEM. No clinical criteria, radiographic findings, or laboratory tests are specific for the diagnosis of PVEM.

(ii) *Table requirements.* A Table injury for PVEM in a recipient or contact requires sufficient evidence in the medical records of the occurrence of acute PVEM. The acute PVEM or related complications must be of sufficient severity to require inpatient hospitalization.

(8) *Fetal Vaccinia (FV)*—(i) *Definition.* FV is an intrauterine vaccinial infection subsequent to vaccinia vaccination or inoculation of the mother that results from the placental transmission of the vaccinia virus during any time in the pregnancy. FV manifests as multiple skin lesions or organ involvement and may result in significant scarring or death. FV skin lesions are similar to those seen in GV or PV and the lesions may come together to form larger lesions. Congenital malformations, other than those described above, are not Table injuries.

(ii) *Table requirements.* A Table injury for FV requires sufficient evidence in the medical records of the occurrence of the FV. The occurrence of the FV or related complications must be of sufficient severity to require inpatient hospitalization or result in permanent and disfiguring scar(s). In addition, a Table injury for FV requires one of the following:

(A) A maternal history of vaccinial vaccination or inoculation, with the occurrence of vaccinial skin or mucous membrane lesions within the incubation period for vaccinia during the pregnancy in a maternal recipient or contact; or

(B) Isolation of vaccinia from intrauterine or neonatal tissue.

(9) *Secondary Infection (SI)*—(i) *Definition.* SI is, for purposes of the Table, a non-vaccinial bacterial, fungal, or viral infection at the site of a vaccinial skin or mucous membrane lesion. SI occurs because the blister formation or ulceration that is part of the normal progression of a vaccinial skin or mucous membrane lesion disrupts the surface of the skin or mucous membrane, allowing potential germs to invade and infect the vaccinial skin or mucous membrane lesion leading to significant illness requiring hospitalization.

(ii) *Table requirements.* A Table injury for SI in a recipient or contact requires sufficient evidence in the medical records of the occurrence of SI. The acute SI or related complications must be of sufficient severity to require inpatient hospitalization.

(10) *Anaphylaxis or Anaphylactic shock*—(i) *Definition.* Anaphylaxis or

anaphylactic shock is, for purposes of the Table, as an acute, severe, and potentially lethal systemic allergic reaction to a component of the smallpox vaccine.

(ii) *Table requirements.* A Table injury for anaphylaxis or anaphylactic shock in a recipient requires sufficient evidence in the medical records of the occurrence of an acute anaphylaxis or anaphylactic shock. The anaphylaxis or anaphylactic shock must be of sufficient severity to require inpatient hospitalization. Anaphylaxis or anaphylactic shock is not a Table injury for contacts.

(11) *Vaccinial Myocarditis, Pericarditis, or Myopericarditis (MP)*—(i) *Definition.* MP is, for purposes of the Table, vaccinial myocarditis, pericarditis, or myopericarditis. Myocarditis is defined as an inflammation of the heart muscle (myocardium). Pericarditis is defined as an inflammation of the covering of the heart (pericardium). Myopericarditis is defined as an inflammation of both the heart muscle and its covering. The inflammation associated with MP may range in severity from very mild (subclinical) to life threatening. In many mild cases, myocarditis is diagnosed solely by transient electrocardiographic (EKG) abnormalities (e.g., ST segment and T wave changes), increased cardiac enzymes, or mild echocardiographic abnormalities. Arrhythmias, abnormal heart sounds, heart failure, and death may occur in more severe cases. Pericarditis generally manifests with chest pain, abnormal heart sounds (pericardial friction rub), EKG abnormalities (e.g., ST segment and T wave changes), and/or increased fluid accumulation around the heart.

(ii) *Table requirements.* A Table injury for MP in a recipient or contact requires sufficient evidence in the medical records of the occurrence of acute MP. The acute MP (or related complications) must be of sufficient severity to require inpatient hospitalization. A death resulting from MP requires sufficient microscopic (histopathologic) evidence of MP or its sequela in heart tissue.

(c) *Glossary for purposes of this section.*

(1) *Blister or vesicle* means a circumscribed, elevated skin or mucous membrane lesion containing an accumulation of fluid.

(2) *Contact* means a person who developed a vaccinial lesion or infection through inoculation (and not vaccination).

(3) *Exposure period* means the span of time during which vaccinia virus can be transmitted from a vaccine recipient shedding vaccinia or through a contact case shedding vaccinia.

(4) *Inoculation* means transmission of and infection with the vaccinia virus through a means other than smallpox vaccination. Spread (inoculation) of vaccinia virus may occur in two ways: either self-inoculation in which the vaccinia virus is spread from the vaccinial lesion at the vaccination site to one or more areas on the same person or person-to-person inoculation when the vaccinia virus is spread to another person, a contact.

(5) *Inoculation site* means the skin or mucous membrane surface where the vaccinia virus entered the body through means other than vaccination.

(6) *Lesion* means a pathologic change.

(7) *Pustule* means a circumscribed, elevated skin or mucous membrane lesion containing an accumulation of white blood cells.

(8) *Recipient* means a person to whom the smallpox vaccine was administered.

(9) *Ulceration* means a specific skin or mucous membrane lesion characterized by erosion of the skin or mucous membrane surface.

(10) *Vaccination* means the administration and receipt of the smallpox (vaccinia) vaccine, and not through contact.

(11) *Vaccination* site means the skin surface where the vaccinia virus entered the body through vaccination.

[68 FR 70093, Dec. 16, 2003, as amended at 71 FR 29808, May 24, 2006]

§§ 102.22–102.29 [Reserved]

Subpart D—Available Benefits

SOURCE: 68 FR 70096, Dec. 16, 2003, unless otherwise noted.

§ 102.30 Benefits available to different categories of requesters under this program.

(a) *Benefits available to smallpox vaccine recipients and vaccinia contacts.* A requester who is an eligible smallpox vaccine recipient or vaccinia contact may be entitled to receive either medical benefits or benefits for lost employment income, or both.

(b) *Benefits available to survivors.* A requester who is an eligible survivor of a smallpox vaccine recipient or vaccinia contact may be entitled to receive a death benefit.

(c) *Benefits available to estates of deceased smallpox vaccine recipients or vaccinia contacts.* The estate of an otherwise eligible deceased smallpox vaccine recipient or vaccinia contact may be eligible to receive medical benefits or benefits for lost employment income, or both, if such benefits were accrued during the deceased person's lifetime as a result of a covered injury or its health complications, but were not paid while the deceased person was living. Such medical benefits and benefits for lost employment income may be available regardless of whether the death was the direct result of a covered injury or an unrelated factor. The estate of a deceased smallpox vaccine recipient or vaccinia contact may not receive a death benefit.

§ 102.31 Medical benefits.

(a) Smallpox vaccine recipients and vaccinia contacts may receive payments or reimbursements for medical services and items that the Secretary determines to be reasonable and necessary to diagnose or treat a covered injury or a health complication of a covered injury (*i.e.*, sequela). The Secretary may pay for such medical services and items in an effort to cure, counteract, or minimize the effects of any covered injury, or any health complication of a covered injury, or to give relief, reduce the degree or the period of disability, or aid in lessening the amount of monthly benefits to a requester (e.g., a surgical procedure that lessens the amount of time and expense for the treatment of a covered injury). The Secretary may make such payments or reimbursements if the medical services and items have already been provided or if they are likely to be provided in the future. In making determinations about which medical services and items are reasonable and necessary, the Secretary may consider whether those medical services and items were prescribed or recommended by a health care practitioner.

(b) To receive medical benefits for the health complications of a covered injury, a requester must demonstrate that the complications are the direct result of the covered injury. Examples of health complications include, but are not limited to, complications of a covered injury that occur as part of the natural course of the underlying disease, an adverse reaction to a prescribed medication or diagnostic test used in connection with a covered injury, or a complication of a surgical procedure used to treat a covered injury.

(c) The calculation of medical benefits available under this Program is described in § 102.80. Although there are no caps on medical benefits available under this Program, the Secretary may limit payments to the amount he deems reasonable for those services and items he considers reasonable and necessary. All payment or reimbursement for medical services and items is secondary to any obligation of any third-party payor to pay for or provide such services or items to the requester. As provided in § 102.84, the Secretary retains the right to recover medical benefits paid to requesters by third-party payors.

(d) The Secretary may make payments or reimbursements of medical benefits to the estate of a deceased smallpox vaccine recipient or vaccinia contact as long as such benefits were accrued during the deceased person's lifetime as the result of a covered injury or its health complications and were not paid during the deceased person's lifetime.

§ 102.32 Benefits for lost employment income.

(a) Requesters who are smallpox vaccine recipients or vaccinia contacts may be able to receive benefits for loss of employment income incurred as a result of a covered injury (or its health complications, as described in

§ 102.31(b)). These benefits are a percentage of the employment income lost due to the covered injury or its health complications.

(b) The method and amount of benefits for lost employment income are described in § 102.81. Benefits for lost employment income will be adjusted if there are fewer than 10 days of lost employment income. Benefits provided for lost employment income may also be adjusted for annual and lifetime caps. Payment of benefits for lost employment income is secondary to any obligation of any third-party payor to pay for lost employment income or to provide disability or retirement benefits to the requester. As provided in § 102.84, the Secretary retains the right to recover benefits for lost employment income paid to requesters from third-party payors.

(c) The Secretary is not requiring an individual to use paid leave (e.g., sick leave or vacation leave) to be paid for lost work days. However, if an individual uses such paid leave in order to be paid for lost work days, the Secretary will not consider the days in which such leave was used to be days of lost employment income, unless the individual's employer restores the leave that was used. By restoring paid leave, an employer puts the individual in the same position as if he or she had not used paid leave on the lost work day (*i.e.*, takes back the payments made when the leave was taken and gives back the leave to the employee for future use).

(d) The Secretary may pay benefits for lost employment income to the estate of a deceased smallpox vaccine recipient or vaccinia contact as long as such benefits were accrued during the deceased person's lifetime as the result of a covered injury or its health complications and were not paid to the deceased person during his or her lifetime.

§ 102.33 Death benefits.

(a) Eligible survivors may be able to receive a death benefit under this Program if the Secretary determines that an otherwise eligible deceased smallpox vaccine recipient or vaccinia contact sustained a covered injury and died as a direct result of the injury. Annual and lifetime caps may apply to the death benefits provided. The method and amount of death benefits are described in § 102.82. As provided in § 102.84, the Secretary retains the right to recover death benefits paid to requesters from third-party payors. Death benefits may be paid under two different calculations.

(b) The standard calculation, described in § 102.82(c), is based upon the death benefit available under the PSOB Program and is available to all eligible survivors (except for surviving dependents younger than the age of 18 who are not also surviving eligible children). In the event that death benefits were paid under the PSOB Program with respect to the deceased person, no death benefits may be paid under the standard calculation. In addition, death benefits under this standard calculation are secondary to disability benefits under the PSOB Program. Any death benefit paid under the standard calculation will be reduced by the total amount of benefits for lost employment income paid to the smallpox vaccine recipient or vaccinia contact during his or her lifetime and to his or her estate after death.

(c) The alternative calculation, described in § 102.82(c), is calculated based on the person's employment income at the time of the covered injury. This calculation is only available to surviving dependents who are younger than the age of 18. The legal guardian(s) of such surviving dependents must select the death benefit as calculated under this alternative calculation before it will be paid. The payment of a death benefit as calculated under this alternative calculation is secondary to other benefits received (compensation for loss of employment income, death benefits (including PSOB Program death benefits), disability benefits, or retirement benefits on behalf of the dependent(s) or his or her legal guardian or life insurance benefits on behalf of the dependent(s)).

Subpart E—Procedures for Filing Request Packages

SOURCE: 68 FR 70096, Dec. 16, 2003, unless otherwise noted.

§ 102.40 How to obtain forms and instructions.

Interested parties may obtain copies of all necessary forms and instructions by sending a letter through the U.S. Postal Service, commercial carrier, or private courier service, by telephone, or by downloading them from the Program's website.

(a) If using the U.S. Postal Service, interested parties should send letters asking for forms and instructions to the Smallpox Vaccine Injury Compensation Program Office, Healthcare Systems Bureau, Health Resources and Services Administration, Parklawn Building, Room 11C–06, 5600 Fishers Lane, Rockville, MD 20857.

(b) If using a commercial carrier or private courier service, interested parties should send letters asking for forms and instructions to the Smallpox Vaccine Injury Compensation Program Office, Healthcare Systems Bureau, Health Resources and Services Administration, Parklawn Building, Room 11C–06, 5600 Fishers Lane, Rockville, Maryland 20857.

(c) For forms and instructions, interested parties can call (888) 496–0338. This is a toll-free number.

(d) Interested parties can download forms and instructions from the Internet at *http://www.hrsa.gov/smallpoxinjury*. Click on the link to ''Forms and Instructions.''

[68 FR 70096, Dec. 16, 2003, as amended at 71 FR 29810, May 24, 2006]

§ 102.41 How to file a Request Package.

A Request Package comprises all the forms and documentation that are submitted to enable the Secretary to determine eligibility and calculate payments. Request Packages may be filed through the U.S. Postal Service, commercial carrier, or private courier service. The Smallpox Vaccine Injury Compensation Program Office will not accept Request Packages electronically or by hand-delivery.

(a) If using the U.S. Postal Service, requesters (or their representatives) should send all forms and documentation to the Smallpox Vaccine Injury Compensation Program Office, Healthcare Systems Bureau, Health Resources and Services Administration, Parklawn Building, Room 11C–06, 5600 Fishers Lane, Rockville, MD 20857.

(b) If using a commercial carrier or private courier service, requesters (or their representatives) should send all forms and documentation to the Smallpox Vaccine Injury Compensation Program Office, Healthcare Systems Bureau, Health Resources and Services Administration, Parklawn Building, Room 11C–06, 5600 Fishers Lane, Rockville, Maryland 20857.

[68 FR 70096, Dec. 16, 2003, as amended at 71 FR 29810, May 24, 2006]

§ 102.42 Deadlines for filing request forms.

(a) *General*. Filing deadlines vary depending on whether the injured individual is a smallpox vaccine recipient or a vaccinia contact. In all cases, the filing date is the date the Request Form is postmarked. A legibly dated receipt from a commercial carrier, a private courier service, or the U.S. Postal Service (e.g., the date that a commercial carrier places on the package at the time of drop-off) will be considered equivalent to a postmark. A Request Form will not be considered filed unless it has been completed (to the fullest extent possible) and signed by the requester or his or her representative. After filing a Request Form within the governing filing deadline, a requester can and should update the Request Form to reflect new information.

(b) *Request forms not filed within deadline*. If the Secretary determines that a Request Form was not filed within the governing filing deadline set out in this section, the Request Form will not be processed and the requester will not be entitled to any benefits under this Program.

(c) *Smallpox vaccine recipients*. All Request Forms filed by, or on behalf of, a smallpox vaccine recipient must be filed within one year of the date of the administration of a smallpox vaccine to the smallpox vaccine recipient. This deadline also applies to a deceased smallpox vaccine recipient's survivor(s) and the representative of his or

her estate. This deadline applies to Request Forms concerning injuries resulting from the administration of a smallpox vaccine or other covered countermeasures.

(d) *Vaccinia contacts.* All Request Forms filed by, or on behalf of, a vaccinia contact must be filed within two years after the date of the first symptom or manifestation of onset of the covered injury in the vaccinia contact. This deadline also applies to a deceased vaccinia contact's survivor(s) and the representative of his or her estate. This deadline applies to Request Forms concerning injuries resulting from vaccinia contracted through accidental vaccinia inoculation or from the administration of covered countermeasures (other than the smallpox vaccine) as a result of such accidental vaccinia inoculation.

(e) *Request forms (or amendments to request forms) based on modifications to the table of injuries.* The Secretary may amend the Table set forth in § 102.21. The effect of such an amendment may enable a requester who previously could not establish a Table injury to establish a Table injury. In such circumstances, the requester must file a new Request Form or an amendment to a previously filed Request Form as follows:

(1) If the injured person is a smallpox vaccine recipient, within one year after the effective date of the amendment to the Table; or

(2) If the injured person is a vaccinia contact, within two years after the effective date of the amendment to the Table.

§ 102.43 Deadlines for submitting documentation.

(a) *Documentation for eligibility determinations.* All eligibility documentation required by the Program should be filed together with the Request Form. However, if this is not possible, a requester will satisfy the filing deadline as long as the signed Request Form is completed (to the fullest extent possible) and submitted within the governing filing deadline described in § 102.42. The Secretary will not generally begin his review of a requester's eligibility until the documentation necessary for the Secretary to make this determination has been submitted. All such documentation must be submitted before the Program terminates.

(b) *Documentation for benefits determinations.* Although the Secretary will accept documentation required to make benefits determinations (*i.e.*, calculate benefits available, if any) at the time the Request Form is filed or any time thereafter, requesters need not submit such documentation until they have been notified that the Secretary has determined eligibility. The Secretary will not generally begin his review of the benefits available to a requester until the documentation necessary for the Secretary to make a benefits determination has been submitted. All such documentation must be submitted before the Program terminates.

§ 102.44 Representatives of requesters.

(a) Persons other than a requester (e.g., a lawyer, guardian, friend) may file a Request Package on a requester's behalf as his or her representative. A requester need not use the services of a lawyer to secure benefits under this Program. A representative (who does not need to be a lawyer) is only required, as described in this section, for requesters who are minors or legally incompetent adults. In the event that a representative files on behalf of a requester, the representative will be bound by the obligations and documentation requirements that apply to the requester (e.g., if a requester is required to submit employment records, the representative must file the requester's employment records). The representative must also satisfy the requirements specific to representatives set forth in this regulation. If a requester has a representative, all communications from the Secretary will be directed exclusively to the representative.

(b) *Representatives of legally competent adults.* A requester who is a legally competent adult *may* use a representative to submit a Request Package on his or her behalf. In such circumstances, the requester must certify on the Request Form that he or she is authorizing the representative to pursue benefits under this Program on his or her behalf.

(c) *Representatives of minors and legally incompetent adults.* A requester who is a minor or a legally incompetent adult *must* use a representative to pursue benefits under this Program on his or her behalf. In such circumstances, the representative must certify, in the place provided on the Request Form, that the requester is a minor or a legally incompetent adult and that the representative is filing on behalf of the requester. In addition, before the requester will be paid by the Program, the representative must submit the documentation described in § 102.63.

(d) No payment or reimbursement for representatives' fees or costs. The Act does not authorize the Secretary to pay, or reimburse for, any fees or costs associated with the requester's use of a personal representative under this Program, including those of an attorney.

[68 FR 70096, Dec. 16, 2003, as amended at 71 FR 29811, May 24, 2006]

§ 102.45 Multiple survivors.

Multiple survivors of the same smallpox vaccine recipient or vaccinia contact may file Request Forms separately or together. Multiple survivors may also submit one set of any required documentation on behalf of all of the requesting survivors as long as such documentation is identical for each survivor.

§ 102.46 Amending a request package.

(a) *Generally.* All requesters may amend their documentation concerning eligibility until the Secretary has made an eligibility determination. Requesters also may amend their information or documentation concerning the calculation of benefits until the Secretary has made a benefits determination. The Secretary may, at his discretion, accept eligibility or benefits documents even after eligibility or benefits determinations have been made (e.g., the Secretary may accept new documents concerning eligibility after determining that a requester is ineligible and may use such documents to reevaluate the earlier eligibility determination). However, such new documentation will not be used in any reconsideration regarding the initial determination. The Secretary will not consider any documentation submitted after the Program terminates.

(b) *Requesters who are survivors.* If a smallpox vaccine recipient or vaccinia contact submitted a Request Form within the filing deadline, but subsequently dies, his or her survivor(s) may amend his or her Request Package at any time before the Program terminates in order to be considered eligible for death benefits. Such an amendment can be filed regardless of whether the Secretary made an eligibility determination or paid benefits with respect to the deceased person's Request Package. However, a survivor filing an amendment to a previously filed Request Package may only be entitled to benefits if the previously filed Request Package was filed within the governing filing deadline. All documentation that has already been submitted with respect to the deceased person will be considered part of the survivor requester's Request Package, and he or she is not required to resubmit such documentation. Survivor requesters must also file an amendment to a Request Package if there is a change in the order of priority of survivors, as described in § 102.11. Such an amendment may be filed at any time before the Program terminates.

(c) *Requests in which benefits are sought by the estate of a deceased smallpox vaccine recipient or vaccinia contact.* If a smallpox vaccine recipient or vaccinia contact submitted a Request Form within the filing deadline, but subsequently dies, a representative of his or her estate may amend his or her Request Package at any time before the Program terminates in order to be considered eligible for benefits. Such an amendment can be filed regardless of whether the Secretary made an eligibility determination or paid benefits with respect to the deceased person's Request Package. However, a representative of an estate filing an amendment to a previously filed Request Package may only be entitled to benefits if the previously filed Request Package was filed within the governing filing deadline. All required documentation that has already been submitted with respect to the deceased person will be considered part of the amended Request Package, and the

representative of the estate is not required to resubmit such documentation.

Subpart F—Required Documentation To Be Deemed Eligible

SOURCE: 68 FR 70096, Dec. 16, 2003, unless otherwise noted.

§ 102.50 Medical records necessary to establish that a covered injury was sustained.

(a) In order to establish that a smallpox vaccine recipient or vaccinia contact sustained a covered injury, a requester must submit the following medical records:

(1) All physician, clinic, or hospital outpatient medical records documenting medical visits, consultations, and test results that occurred on or after the date of the smallpox vaccination or exposure to vaccinia; and

(2) All inpatient hospital medical records, including the admission history and physical examination, the discharge summary, all physician subspecialty consultation reports, all progress notes, and all test results that occurred on or after the date of the smallpox vaccination or exposure to vaccinia.

(b) A requester may submit additional medical documentation that he or she believes will support the Request Package. Although generally not required if a Table injury was sustained, a requester may need to introduce additional medical documentation or scientific evidence in order to establish that an injury was caused by a covered countermeasure (including the smallpox vaccine) or vaccinia contracted through accidental vaccinia inoculation.

(c) If certain medical records listed in paragraph (a) of this section are unavailable to the requester after he or she has made reasonable efforts to obtain the records, the requester must submit a statement describing the reasons for the records' unavailability and the efforts he or she has taken to obtain the records. The Secretary has the discretion to accept such a statement in place of the unavailable medical records. In this circumstance, the Secretary may require an authorization from the requester (or his or her representative) to try to obtain the records on his or her behalf.

(d) In certain circumstances, the Secretary may require additional medical records to make a determination that a covered injury was sustained (e.g., medical records prior to the date of vaccination or accidental vaccinia exposure) or may determine that certain records described in paragraph (a) of this section are not necessary for an eligibility determination (e.g., records that are duplicative of other records submitted). If the Program requests additional medical records (or information) from a requester's health care practitioner, then the requester may use a release form in order to have the medical records sent directly to the Program.

§ 102.51 Documentation a smallpox vaccine recipient must submit to be deemed eligible by the Secretary.

(a) A smallpox vaccine recipient must submit the following documentation in order to be deemed eligible by the Secretary:

(1) A completed (to the fullest extent possible) and signed Request Form.

(2) Documentation demonstrating that the requester:

(i) Is a health care worker, law enforcement officer, firefighter, security personnel, emergency medical personnel, other public safety personnel, or support personnel for such occupational specialties who has volunteered and been selected to be a member of a smallpox emergency response plan prior to the time at which the Secretary publicly announces that an active case of smallpox has been identified within or outside of the United States and that the requester is or will be functioning in a role identified in a smallpox emergency response plan; and

(ii) Was administered a smallpox vaccine pursuant to an approved smallpox emergency response plan during the effective period of the Declaration.

(3) If the requester's injury relates to the administration of cidofovir or its derivatives or Vaccinia Immune Globulin, and not the smallpox vaccine, documentation demonstrating that the

requester was administered such a covered countermeasure during the effective period of the Declaration.

(4) Medical records sufficient to demonstrate that the requester sustained a covered injury, as described in § 102.3(g), in accordance with the requirements set forth in § 102.50.

(b) As an alternative to the documentation described in paragraphs (a)(2)(i)–(ii) of this section (documentation concerning a vaccine recipient's participation in, and receipt of the smallpox vaccine under, an approved smallpox emergency response plan), a requester may submit a certification, by a Federal, State, or local government entity or private health care entity participating in the administration of covered countermeasures through a smallpox emergency response plan, that the requester is a person described in § 102.3(x)(1)–(3) (a person meeting the definition of a smallpox vaccine recipient, except for the requirement that the person sustained a covered injury). A certification form that may be used for this purpose is available from the Program.

[68 FR 70093, Dec. 16, 2003; 69 FR 7376, Feb. 17, 2004]

§ 102.52 Documentation a vaccinia contact must submit to be deemed eligible by the Secretary.

A requester who is a vaccinia contact must submit the following documentation in order to be deemed eligible by the Secretary:

(a) A completed (to the fullest extent possible) and signed Request Form;

(b) Documentation identifying the individual who was the source of the accidental vaccinia inoculation. This documentation must demonstrate that the source of the vaccinia was an individual described in § 102.3(x)(1)–(3) (a person meeting the definition of a smallpox vaccine recipient, except for the requirement that the person sustained a covered injury) or an individual who was accidentally inoculated by an individual described in § 102.3(x)(1)–(3) (a person meeting the definition of a smallpox vaccine recipient, except for the requirement that the person sustained a covered injury). If the requester is unable to provide the identity of the person who was the source of the accidental exposure, he or she must explain in writing both why this criterion cannot be met and the circumstances of the accidental vaccinia inoculation that support an individual described above as the source of the accidental vaccinia inoculation. The Secretary has the discretion to accept the requester's statement as evidence of the requester's source of exposure; and

(c) Medical records sufficient to demonstrate that the requester contracted vaccinia during the effective period of the Declaration (or within 30 days thereafter) and sustained a covered injury, as described in § 102.3(g), in accordance with the requirements set forth in § 102.50. These records must be consistent with the requester contracting vaccinia after the accidental vaccinia inoculation described in paragraph (b) of this section.

§ 102.53 Documentation a survivor must submit to be deemed eligible by the Secretary.

A requester who is a survivor must submit the following documentation in order to be deemed eligible by the Secretary:

(a) A completed (to the fullest extent possible) and signed Request Form;

(b) All of the documentation required in:

(1) Section 102.51(a)(2)–(4) (documentation requirements for smallpox vaccine recipients), in the case of a deceased smallpox vaccine recipient. The survivor requester may submit a certification, as described in § 102.51(b) in the place of the documentation described in § 102.51(a)(2) (documentation concerning a vaccine recipient's participation in, and receipt of the smallpox vaccine under, an approved smallpox emergency response plan); or

(2) Section 102.52(b)–(d) (documentation requirements for vaccinia contacts), in the case of a deceased vaccinia contact;

(c) A death certificate for the deceased smallpox vaccine recipient or vaccinia contact. If a death certificate is unavailable, the requester must submit a letter providing the reasons for its unavailability. The Secretary has

the discretion to accept other documentation as evidence that the smallpox recipient or vaccinia contact is deceased;

(d) Medical records sufficient to demonstrate that the deceased smallpox vaccine recipient or vaccinia contact died as the result of the covered injury. Such medical records may be the same as those required under § 102.50. If an autopsy was performed on the deceased smallpox vaccine recipient or vaccinia contact, the requester must submit a complete copy of the final autopsy report.

(e) Documentation showing that the requester is an eligible survivor, pursuant to § 102.11 (e.g., birth certificate or marriage certificate); and

(f) A certification, on the place provided on the Request Form, either that there are no other eligible survivors (e.g., for surviving eligible children, a certification that there is no surviving spouse, no other surviving eligible children, and no other surviving dependents younger than the age of 18 who may be eligible for the death benefit under the alternative calculation) or that other eligible survivors exist (along with the information known about such survivors). Section 102.11 lists eligible survivors and the priorities of survivorship.

§ 102.54 Documentation the representative of the estate of a deceased smallpox vaccine recipient or vaccinia contact must submit to be deemed eligible by the Secretary.

A requester who is the representative of the estate of a deceased smallpox vaccine recipient or vaccinia contact must submit the following documentation in order for the estate to be deemed eligible by the Secretary:

(a) A completed (to the fullest extent possible) and signed Request Form;

(b) All of the documentation required in:

(1) Section 102.51(a)(2)–(4) (documentation requirements for smallpox vaccine recipients), in the case of a deceased smallpox vaccine recipient. The requester may submit a certification, as described in § 102.51(b) in the place of the documentation described in § 102.51(a)(2) (documentation concerning a vaccine recipient's participation in, and receipt of the smallpox vaccine under, an approved smallpox emergency response plan); or

(2) Section 102.52(b)–(d) (documentation requirements for vaccinia contacts), in the case of a deceased vaccinia contact;

(c) A death certificate for the deceased smallpox vaccine recipient or vaccinia contact. If a death certificate is unavailable, the requester must submit a letter providing the reasons for its unavailability. The Secretary has the discretion to accept other documentation as evidence that the smallpox recipient or vaccinia contact is deceased; and

(d) Documentation showing that the requester is the representative of the estate of the deceased smallpox vaccine recipient or vaccinia contact.

Subpart G—Required Documentation for Eligible Requesters To Receive Benefits

SOURCE: 68 FR 70096, Dec. 16, 2003, unless otherwise noted.

§ 102.60 Documentation an eligible requester seeking medical benefits must submit.

A requester deemed eligible by the Secretary who seeks payment or reimbursement for medical services or items must submit the following, in addition to the documentation submitted under subpart F:

(a) *List of third-party payors.* The requester must submit a list of all third-party payors that may have an obligation to pay for or provide any medical services or items for which payment or reimbursement is being sought under this Program. Such third-party payors may include, but are not limited to, health maintenance organizations, health insurance companies, Medicare, Medicaid, and other entities obligated to provide medical services or items or recompense individuals for medical expenses. Such a list must include the individual's account numbers and other applicable information. If the requester knows of no such third-party payor, he or she must certify to that fact. If the requester becomes aware that a third-party payor may have such an obligation, the requester must inform the

Secretary within 10 business days of becoming aware of this information.

(b) *Documents for medical services or items provided in the past.* A requester seeking payment or reimbursement for medical services or items provided in the past must submit an itemized statement from each health care entity (e.g., clinic, hospital, doctor, or pharmacy) and third-party payor listing the services or items provided to diagnose or treat the covered injury or its health complications and the amounts paid or expected to be paid by third parties for such services or items (e.g., an Explanation of Benefits from the individual's health insurance company). If no third-party payor has an obligation to pay for or provide such services or items, the requester must certify to that fact and submit an itemized list of the services or items provided (including the total cost of such services or items). To assist the Secretary in making a determination as to whether such services or items were reasonable and necessary to diagnose or treat a covered injury or its health complications, the requester may submit, in addition to the required medical records, documentation showing that a health care practitioner prescribed or recommended such services or items. The medical records must support the requested services and items;

(c) *Documents for medical services and items expected to be provided in the future.* A requester seeking payments for medical services or items expected to be provided in the future must submit a statement from one or more health care practitioner(s) (e.g., a treating neurologist for neurologic issues and a treating cardiologist for cardiologic issues) describing those services and items that appear likely to be needed to diagnose or treat the covered injury or its health complications in the future. The medical records must support the requested services and items. A requester must submit documentation, if available, concerning the likely cost of, and the amount expected to be paid by third-party payors for, such services or items.

§ 102.61 Documentation an eligible requester seeking benefits for lost employment income must submit.

A requester deemed eligible by the Secretary who seeks benefits for lost employment income from the Program must submit, in addition to the documentation submitted under subpart F, documentation describing:

(a) The number of days (including partial days) of work missed by the smallpox vaccine recipient or vaccinia contact as a result of the covered injury or its health complications for which employment income was lost (e.g., time sheet from pay period reflecting work days missed). As stated in § 102.32(c), days for which an individual used paid leave in order to be paid for lost work will be considered days of work for which employment income was received (unless the individual's employer restores the leave that was used by putting the individual in the same position as if he or she had not used paid leave);

(b) The smallpox vaccine recipient or vaccinia contact's gross employment income at the time the covered injury was sustained (e.g., the individual's most recent Federal tax return or a pay stub from the time of the covered injury);

(c) Whether the smallpox vaccine recipient or vaccinia contact had one or more dependents at the time the covered injury was sustained (e.g., the individual's most recent Federal tax return); and

(d) All third-party payors that have paid for or that may be required to pay the requester benefits for loss of employment income or provide disability and retirement benefits for which payment or reimbursement is being sought under this Program (e.g., State workers' compensation programs, disability insurance programs, etc.). A requester must submit documentation, if available, concerning the amount of such payments or benefits expected to be paid by third-party payors. If the requester knows of no such third-party payor, he or she must certify to that fact. If, at any time, the requester becomes aware that a third-party payor may have such an obligation, the requester must inform the Secretary

within 10 business days of becoming aware of this information.

§ 102.62 Documentation an eligible requester seeking a death benefit must submit.

(a) A requester deemed an eligible survivor by the Secretary who seeks a death benefit under § 102.82(c) must submit, in addition to the documentation submitted under subpart F, a certification informing the Secretary whether a disability or death benefit was paid under the PSOB Program with respect to the deceased smallpox vaccine recipient or vaccinia contact. If such a benefit(s) was provided, the requester must submit documentation showing the amount of the benefit(s) provided by the PSOB Program. If no such benefits were provided, the certification must explain whether any survivors are eligible for a death benefit under the PSOB Program and, if so, whether death benefits have been sought under the PSOB Program.

(b) A representative seeking a death benefit under § 102.82(d) on behalf of a dependent requester younger than the age of 18 deemed an eligible survivor by the Secretary must submit, in addition to the documentation submitted under subpart F, the following:

(1) Documentation showing that the deceased smallpox vaccine recipient or vaccinia contact is survived by one or more dependents younger than the age of 18. Such documentation must show the date of birth of all such dependents (e.g., copies of birth certificates);

(2) A written selection by each legal guardian, on behalf of all of the dependents described in paragraph (b)(1) of this section for whom he or she is the legal guardian, to receive proportional death benefits under the alternative calculation as described in § 102.82(d), in place of proportional benefits available under the standard calculation as described in § 102.82(c). Written selections are described in § 102.82(d)(1).

(3) Documentation showing that the requester is the legal guardian of all of the dependents described in paragraph (b)(1) of this section, as required under § 102.63(b). If multiple dependents have different legal guardians, the legal guardian of each dependent(s) must submit such documentation;

(4) Documentation showing the deceased smallpox vaccine recipient or vaccinia contact's gross employment income at the time the covered injury was sustained (e.g., the decedent's most recent Federal tax return or a pay stub from the time of the covered injury); and

(5) A description of all third-party payors that have paid for or that may be required to pay for the benefits described in § 102.82(d)(3)(A). This description must include the amount of such benefits that have been paid or that may be authorized to be paid in the future. If the representative knows of no such third-party payor, he or she must certify to that fact. If, at any time, the representative becomes aware that a third-party payor may have such an obligation, he or she must inform the Secretary within 10 business days of becoming aware of this information.

§ 102.63 Documentation a representative filing on behalf of an eligible requester who is a minor or a legally incompetent adult must submit.

Before benefits will be paid under by the Program to an eligible requester who is a minor or legally incompetent adult, his or her representative must submit, in addition to the documentation submitted under subpart F and under §§ 102.60–102.62, the following:

(a) Documentation showing that the requester is:

(1) A minor (e.g., birth certificate); or

(2) A legally incompetent adult (e.g., court decree of incompetency); and

(b) Documentation showing that:

(1) In the case of a minor, the requester is the legal guardian of the minor (e.g., birth certificates for parents who are legal guardians or, for other legal guardians, a decree by a court of competent jurisdiction establishing the legal guardianship of a person other than the minor's parents under applicable State law). If a minor has more than one legal guardian, this information is required only of one legal guardian; or

(2) In the case of a legally incompetent adult, a decree by a court of competent jurisdiction establishing a guardianship or conservatorship of the

requester's estate under applicable State law.

Subpart H—Secretarial Determinations

SOURCE: 68 FR 70096, Dec. 16, 2003, unless otherwise noted.

§ 102.70 Determinations the Secretary must make before benefits can be paid.

(a) Before reviewing a Request Package, the Secretary will assign a Program number to the Request Package and so inform the requester (or his or her representative) in writing. All correspondence to the requester (or his or her representative) about a specific Request Package will be referenced by this Program number.

(b) Before the Secretary will pay benefits under this Program, he must determine that:

(1) The requester or his or her representative submitted a completed (to the fullest extent possible) and signed Request Form within the governing filing deadline;

(2) The requester meets the eligibility requirements set out in this part (including a determination that a covered injury was sustained); and

(3) The requester is entitled to receive benefits from the Program. In making this determination, the Secretary will decide the type(s) and amounts of benefits that will be paid to the requester.

(c) Once the Secretary has sufficient documentation to make an eligibility or benefits determination, he will make the decision in a timely manner.

§ 102.71 Insufficient documentation for eligibility and benefits determinations.

In the event that there is insufficient documentation in the Request Package for the Secretary to make the applicable determinations under this part, the Secretary will notify the requester, or his or her representative. The requester will be given 60 calendar days from the date of the Secretary's notification to submit the required documentation. If the requester is unable to provide the additional documentation, he or she may write to the Secretary and explain the reason that the requested documentation is unavailable and the efforts the requester has taken to obtain the documents. The Secretary may accept such a letter in place of the required documentation or disapprove the request due to insufficient documentation. If no documentation is submitted in response to the Secretary's letter, the Secretary may disapprove the request. The Secretary also may require an authorization from the requester (or his or her representative) to try to obtain required documentation on his or her behalf.

§ 102.72 Sufficient documentation for eligibility and benefits determinations.

(a) *Eligibility determinations.* When the Secretary determines that there is sufficient documentation in the Request Package to conduct an evaluation of a requester's eligibility, he will begin the review to determine whether the requester is eligible. If the Secretary determines that the requester is not eligible, the Secretary will inform the requester (or his or her representative) in writing of the disapproval and the options available to the requester, including reconsideration.

(b) *Benefits determinations.* If the Secretary determines that the requester is eligible for benefits, he will, after receiving documentation from the requester for a benefits determination, either calculate the amount and types of benefits, as described in subpart I of this part, or request additional documentation in order to calculate the benefits that can be paid (e.g., an Explanation of Benefits from the requester's insurance company if none was provided).

(c) *Additional documentation required.* At any time after a Request Form has been filed, the Secretary may direct a requester to supplement or amend the Request Package by providing additional information or documentation.

§ 102.73 Approval of benefits.

When the Secretary has determined that benefits will be paid to a requester and has calculated the type and amount of such benefits, he will notify the requester (or his or her representative) in writing. The Secretary will

make payments in accordance with § 102.83.

§ 102.74 Disapproval of benefits.

(a) If the Secretary determines that a requester is not eligible for payments under the Program, the Secretary will disapprove the request and provide the requester, or his or her representative, with a written notice of the basis for the disapproval and the options available to the requester, including reconsideration.

(b) The Secretary may disapprove a request at any time, even before the requester has submitted required documentation (e.g., the Secretary may determine that a requester did not meet the filing deadline, even before required documentation is submitted or reviewed).

Subpart I—Calculation and Payment of Benefits

SOURCE: 68 FR 70096, Dec. 16, 2003, unless otherwise noted.

§ 102.80 Calculation of medical benefits.

In calculating medical benefits, the Secretary will take into consideration all reasonable costs for those medical items and services that are reasonable and necessary to diagnose or treat a smallpox vaccine recipient or vaccinia contact's covered injury or its health complications, as described in § 102.31. The Secretary will consider and may rely upon benefits documentation submitted by the requester (e.g., bills, Explanation of Benefits, and cost-related documentation to support the expenses relating to the covered injury or its health complications), as required by § 102.60. The Secretary will make such payments only to the extent that such costs were not, and will not be, paid by any third-party payor and only if no third-party payor had or has an obligation to provide such services or items to the requester, except as provided in § 103.83(c) and § 103.84. There are no caps on medical benefits that may be provided under the Program.

§ 102.81 Calculation of benefits for lost employment income.

(a) *Primary calculation.* Benefits under this section may be paid for days of work lost as a result of a covered injury or its health complications if the smallpox vaccine recipient or vaccinia contact lost employment income for the lost work days. As described in § 102.32(c), days in which an individual used paid leave (including vacation and sick leave) for lost work days will not be considered days for which the individual lost employment income (unless the individual's employer restores the leave taken by putting the employee in the same position as if he or she had not used paid leave).

(1) The Secretary will calculate the rate of benefits to be paid for the lost work days based on the smallpox vaccine recipient or vaccinia contact's gross employment income, which includes income from self-employment, at the time he or she sustained the covered injury. The Secretary may not, except with respect to injured individuals who are minors, consider projected future earnings in this calculation.

(i) For a smallpox vaccine recipient or vaccinia contact with no dependents at the time the covered injury was sustained, the benefits are 66⅔% of the individual's gross employment income at the time the covered injury was sustained.

(ii) For a smallpox vaccine recipient or vaccinia contact with one or more dependents at the time the covered injury was sustained, the benefits are 75% of the individual's gross employment income at the time the covered injury was sustained; and

(2) In the case of a smallpox vaccine recipient or vaccinia contact who is a minor, the Secretary may consider the provisions of 5 U.S.C. 8113 (part of the statute authorizing the FECA Program), and any implementing regulations, in determining the amount of payments under this section and the circumstances under which such payments are reasonable and necessary.

(b) *Adjustment for inflation.* Benefits for lost employment income paid under the Program that represent future lost employment income will be adjusted annually to account for inflation.

(c) *Limitations on benefits paid.* The Secretary will reduce the benefits calculated under paragraphs (a) and (b) of this section, according to the limitations described in this paragraph:

(1) *Annual limitation.* The maximum amount that a requester can receive in any one year in benefits for lost employment income under this Program is $50,000;

(2) *Lifetime limitation.* The maximum amount that a requester can receive during his or her lifetime in benefits for lost employment income under this Program is the amount of the death benefit calculated under the PSOB Program in the same fiscal year as the year in which this lifetime cap is reached. This amount is the maximum death benefit payable to survivors under this Program using the standard calculation described in §102.82(c). However, this lifetime cap does not apply if the Secretary determines that the smallpox vaccine recipient or vaccinia contact has a covered injury (or injuries) meeting the definition of ''disability'' in section 216(i) of the Social Security Act, 42 U.S.C. 416(i); and

(3) *Number of lost work days.* A requester will be compensated for ten or more days of work lost if he or she lost employment income for those days as a result of the covered injury (or its health complications). If the number of days of lost employment income due to the covered injury (or its health complications) is fewer than ten, the Secretary will reduce the number of lost work days by 5 days. If the smallpox vaccine recipient or vaccinia contact lost employment income for a period of 5 days or fewer, no benefits for lost employment income will be paid. Lost work days do not need to be consecutive. Partial days of lost employment income may be aggregated to calculate the total number of lost work days. The Secretary has the discretion to consider the reasonableness of work days (or partial work days) lost as a result of a covered injury or its health complications in this calculation.

(d) *Reductions for other coverage.* From the amount of benefits calculated under paragraphs (a), (b), and (c) of this section, the Secretary will make reductions:

(1) For all payments made, or expected to be made in the future, to the requester for compensation of lost employment income or disability or retirement benefits, by any third-party payor in relation to the covered injury or its health complications, consistent with §102.32(b); and

(2) So that the total amount of benefits for lost employment income paid to a requester under this Program, together with the total amounts paid (or payable) by third-party payors, as described in paragraph (d)(1) of this section, does not exceed 66⅔% (or 75%, if the smallpox vaccine recipient or vaccinia contact had at least one dependent at the time the covered injury was sustained) of his or her employment income at the time of the covered injury for the lost work days. If a requester receives a lump-sum payment from any third-party payor, under any obligation described in paragraph (d)(1) of this section, the Secretary will deem such a payment to be received over a period of years, rather than in a single year. The Secretary has discretion as to how to apportion such payments over multiple years; and

(e) *Termination of payments.* The Secretary will not pay benefits for lost employment income after the requester reaches the age of 65.

[68 FR 70093, Dec. 16, 2003; 69 FR 7376, Feb. 17, 2004]

§102.82 Calculation of death benefits.

(a) *Definitions.* For purposes of this section:

(1) *Alternative calculation* means the calculation used under paragraph (d) of this section for the death benefit available to dependents.

(2) *Deceased person* means an otherwise eligible deceased smallpox vaccine recipient or vaccinia contact; and

(3) *Dependent* means a person whom the Internal Revenue Service would have considered the deceased person's dependent at the time the covered injury was sustained, and who is younger than the age of 18 at the time of filing the Request Form.

(4) *Standard calculation* means the calculation used under paragraph (c) of this section for the death benefit available to all eligible survivors (other

than dependents who do not meet another category of eligible survivors, such as surviving eligible children).

(b) *General.* (1) If the legal guardian(s) of dependents younger than 18 years of age does not file a written selection to receive death benefits under the alternative calculation, as described in paragraph (d)(1) of this section, or if the Secretary does not approve such a selection, the Secretary will pay proportionate death benefits under the standard calculation to all of the eligible survivors with priority to receive death benefits under the standard calculation, as described in § 102.11(b).

(2) If the Secretary approves a written selection to receive benefits under the alternative calculation, as described in paragraph (d)(1) of this section:

(i) If no other eligible survivors are of equal priority to receive death benefits, the Secretary will pay a death benefit in an amount calculated under the alternative calculation to the aggregate of the dependents on whose behalf the election was filed; and

(ii) If other eligible survivors are of equal priority to receive death benefits as the dependents receiving death benefits under the alternative calculation, the Secretary will pay the other eligible survivors a proportionate amount of the death benefit available and calculated under the standard calculation. In such circumstances, the Secretary will pay the aggregate of the dependents receiving a death benefit under the alternative calculation a proportionate share of the benefits available under that calculation (in place of the proportionate share of the death benefit that would be available under the standard calculation). For example, if a deceased smallpox vaccine recipient is survived by a dependent 10-year old child and a spouse who is not the child's legal guardian (e.g., the dependent child's parents were the deceased person and his or her former spouse), the surviving spouse would be able to receive his or her share of the death benefit under the standard calculation, and the dependent child's legal guardian, on behalf of the minor, would receive either the child's proportionate share of the death benefit under the standard calculation or the child's proportionate share of the death benefit available under the alternative calculation (if the legal guardian filed a written selection for such a death benefit).

(c) *Standard calculation of death benefits.* (1) The maximum death benefit available under the standard calculation of death benefits is the amount of the comparable death benefit calculated under the PSOB Program in the same fiscal year as the year in which the death benefit under the standard calculation is paid under this Program (without regard to any reduction under the PSOB Program attributable to a limitation in appropriations), reduced by the total amount of benefits for lost employment income paid under this Program to the deceased person during his or her lifetime and to his or her estate after death.

(2) No death benefit will be paid under the standard calculation if a death benefit has been paid, or if survivors are eligible to receive a death benefit, under the PSOB Program with respect to the deceased person.

(3) No death benefit will be paid under the standard calculation if a disability benefit has been paid under the PSOB Program with respect to the deceased person. However, if the PSOB Program disability benefit paid was reduced because of a limitation on appropriations, a death benefit will be available under the standard calculation to the extent necessary to ensure that the total amount of disability benefits paid under the PSOB Program, together with the amount of death benefits paid under the standard calculation, equals the amount of the death benefit described in paragraph (c)(1) of this section.

(4) Death benefits will be paid under the standard calculation in a lump sum.

(d) *Alternative calculation of death benefits available to surviving dependents younger than the age of 18.* If a deceased smallpox vaccine recipient or vaccinia contact had at least one dependent who is younger than the age of 18 (and will be younger than the age of 18 at the time of the payment), the legal guardian(s) of all such dependents may request benefits under the alternative

calculation described in this paragraph. To receive such a benefit, the legal guardian, on behalf of all such dependents for whom he or she is the legal guardian, must file a selection to receive benefits under the alternative calculation, as described in paragraph (d)(1) of this section. If multiple dependents have different legal guardians, each legal guardian is responsible for requesting benefits under the standard calculation or for filing a selection for a death benefit under the alternative calculation. If a single dependent has more than one legal guardian, one legal guardian may file the selection. Payments made under the alternative calculation will be made to the legal guardian(s) of all of the dependents on behalf of all of those dependents until they reach the age of 18.

(1) *Selection of benefits under alternative calculation.* Before a payment of a death benefit will be approved under the alternative calculation, the legal guardian(s) of the dependents for whom he or she is the legal guardian must file a written selection, on behalf of all such dependents, to receive a death benefit under the alternative calculation. If such a selection is approved by the Secretary, these dependents will be paid a proportionate share of the death benefit under the alternative calculation in place of the proportionate share of benefits that would otherwise be available to them under the standard calculation.

(2) *Amount of payments.* The maximum death benefit available under this paragraph is 75% of the deceased person's income (including income from self-employment) at the time he or she sustained the covered injury that resulted in death, adjusted to account for inflation (as appropriate), except as follows:

(i) The maximum payment of death benefits that may be made on behalf of the aggregate of the dependents in any one year is $50,000;

(ii) All payments made under this paragraph will stop once the youngest of the dependents reaches the age of 18.

(3) *Reductions for other coverage.* The total amount of death benefits provided under the alternative calculation will be reduced so that the total amount of payments made (or expected to be made) under obligations described in paragraph (d)(3)(i) of this section, together with the death benefits paid under the alternative calculation, is not greater than the amount of payments described in paragraph (d)(2) of this section. In other words, the total amount of death benefits paid to dependents under the alternative calculation may be reduced if third-party payors have paid (or are expected to pay) for certain benefits so that such dependents will receive a total sum (combining the death benefit paid under the alternative calculation and the actual and expected benefits paid for by third-party payors) that is not greater than the death benefit that would be available under the alternative calculation if no third-party payor existed to pay such benefits.

(i) The amount of death benefits paid under the alternative calculation will be reduced for all payments made, or expected to be made in the future, by any third-party payor for:

(A) Compensation for the deceased person's loss of employment income on behalf of the dependents or their legal guardian(s);

(B) Disability, retirement, or death benefits in relation to the deceased person (including, but not limited to, death and disability benefits under the PSOB Program) on behalf of the dependents or their legal guardian(s); and

(C) Life insurance benefits on behalf of the dependents.

(ii) In calculating such reductions, the Secretary will deem any lump-sum payment made by a third-party payor under any obligation described in paragraph (d)(3)(A) of this section, as received over a period of years, rather than in a single year. The Secretary has discretion as to how to apportion such payments over multiple years.

(4) *Timing of payments.* Payments made under this paragraph will be made on an annual basis, beginning at the time of the initial payment, to the legal guardian(s) on behalf of the aggregate of the dependents receiving the payment. In the year in which the youngest dependent reaches the age of 18, payments under this section will be paid on a pro rata basis for the period of time before that dependent reaches the age of 18. Once a dependent reaches

the age of 18, the payments under this alternative calculation will no longer be made on his or her behalf. Because payments under the alternative calculation are to be made on behalf of dependents who are younger than the age of 18, if a dependent meets this requirement at the time of filing of the Request Form, but reaches the age of 18 (or is older than 18 years of age) at the time of the initial payment, no payment will be made to the dependent's legal guardian on his or her behalf under the alternative calculation.

[68 FR 70093, Dec. 16, 2003; 69 FR 7376, Feb. 17, 2004]

§ 102.83 Payment of all benefits.

(a) The Secretary may pay any benefits under this Program through lump-sum payments. If the Secretary determines that there is a reasonable likelihood that the payments of medical benefits, benefits for lost employment income, or death benefits paid under the alternative calculation (described in § 102.82(d)) will be required for a period in excess of one year from the date the Secretary determines the requester is eligible for such benefits, the Secretary may make a lump-sum payment, purchase an annuity or medical insurance policy, or execute an appropriate structured settlement agreement, provided that such payment, annuity, policy, or agreement is actuarially determined to have a value equal to the present value of the projected total amount of benefits that the requester is eligible to receive under §§ 102.80, 102.81, and 102.82(d).

(b) Lump sum payments will be made through an electronic funds transfer to an account of the requester. However, if the requester is a minor, the payment will be made to the account of his or her legal guardian on behalf of the minor. In accepting such payments, the legal guardian of a minor requester is obliged to use the funds for the benefit of the minor and to take any actions necessary to comply with state law requirements pertaining to such payments. If the requester is a legally incompetent adult, the legal guardian must establish a guardianship or conservatorship of the estate account with court oversight, in accordance with State law, and payment will be made to that account.

(c) The Secretary may, at his discretion, make interim payments of benefits under this Program, even before he makes a final determination as to the total type and total amount of benefits that will be paid. The Secretary may, for example, make an interim payment of medical benefits that have been calculated before a final determination on benefits for lost employment income is completed, or of past medical benefits that have been calculated before a final calculation of future medical benefits is completed. The Secretary may, in his discretion, make an interim payment even before a final eligibility or benefits determination is made (e.g., if a piece of documentation has not been obtained because a person with a severe vaccine-related injury is hospitalized, but all other documentation is consistent with the requester meeting the eligibility requirements). If such a requester's documentation is incomplete, the requester must submit the required documentation within the time-frame determined by the Secretary. Such a requester must agree that he or she will be obliged to repay the Secretary such benefits in the event that such payments are later determined to be inappropriate. Any payments made on an interim basis will not entitle a requester to seek reconsideration of the Secretary's decision on these benefits until the Secretary makes a complete benefits determination.

[68 FR 70096, Dec. 16, 2003, as amended at 71 FR 29811, May 24, 2006]

§ 102.84 The Secretary's right to recover benefits paid under this program from third-party payors.

Upon payment of benefits under this program, the Secretary will be subrogated to the rights of the requester and may assert a claim against any third-party payor with a legal or contractual obligation to pay for (or provide) such benefits and may recover from such third-party payor(s) the amount of benefits paid up to the amount of benefits the third-party payor has or had an obligation to pay for (or provide). In other words, the Secretary may pay benefits before the

requester receives a payment from a third-party payor in specific circumstances. In those circumstances, the Secretary has a right to be reimbursed by the third-party payor. The circumstances in which the Secretary may assert this right include those in which the Secretary pays benefits under this Program to a requester before a final decision is made that a third-party payor has an obligation to pay such benefits to the requester. Requesters receiving benefits under this Program (or their representatives) shall assist the Secretary in recovering such benefits. In the event that a requester receives a benefit from a third-party payor after receiving the same type of benefits from the Secretary under this Program, the Secretary has a right to recover the amount of the benefits awarded from the requester.

Subpart J—Reconsideration of the Secretary's Determinations

SOURCE: 68 FR 70096, Dec. 16, 2003, unless otherwise noted.

§ 102.90 Reconsideration of the Secretary's eligibility and benefits determinations.

(a) *Right of reconsideration.* A requester has the right to seek reconsideration of the Secretary's determination that he or she is not eligible for payment. In addition, a requester who asserts that the amount of the benefits paid by the Secretary (or the fact that certain benefits were not paid or payable) is incorrect may also seek reconsideration. Letters seeking reconsideration must be in writing, describe the reason(s) why the decision should be reconsidered, and be postmarked within 60 calendar days of the date of the Secretary's decision on the request. Because no new documentation will be considered in the reconsideration process, the letter seeking reconsideration may not include or refer to any documentation that was not before the Secretary at the time of his initial determination.

(b) *Letters seeking reconsideration.* A requester, or his or her representative, may send a letter seeking reconsideration through the U.S. Postal Service, commercial carrier, or a private courier service. The Secretary will not accept letters seeking reconsideration electronically or by hand-delivery.

(1) Letters sent through the U.S. Postal Service must be sent to the Associate Administrator, Healthcare Systems Bureau, Health Resources and Services Administration, 5600 Fishers Lane, Room 12–105, Rockville, Maryland 20857.

(2) Letters sent through a commercial carrier or private courier service must be sent to the Associate Administrator, Healthcare Systems Bureau, Parklawn Building, Room 12–105, 5600 Fishers Lane, Rockville, Maryland 20857.

(c) *Reconsideration process.* When the Associate Administrator of the Healthcare Systems Bureau (the Associate Administrator), receives a letter seeking reconsideration, a qualified panel will be convened, independent of the Program, to review the Secretary's initial determination. The panel will base its recommendation on the documentation before the Secretary when the initial determination(s) was made. The panel will perform its own review and make its own findings, which will be submitted to the Associate Administrator. The Associate Administrator will then review the panel's recommendation(s) and make a final determination, which will be sent to the requester (or his or her representative). This will be the Secretary's final action on the letter seeking reconsideration and will be considered the Secretary's final determination on the request. Requesters may not seek review of a decision made on reconsideration.

[68 FR 70096, Dec. 16, 2003, as amended at 71 FR 29811, May 24, 2006]

§ 102.91 Secretary's review authority.

Under section 262(f)(1) of the Public Health Service Act (42 U.S.C. 239a(f)(1)), the Secretary may, at any time, review on his own motion or on application, any determination made under this part (including, but not limited to, determinations concerning eligibility, entitlement to benefits, and the calculation and payment of benefits under the Program). Upon review of such a determination, the Secretary

may affirm, vacate, or modify the determination in any manner the Secretary deems appropriate.

§ 102.92 No additional judicial or administrative review of determinations made under this part.

Under section 262(f)(2) of the Public Health Service Act (42 U.S.C. 239a(f)(2)), no further judicial review of the Secretary's actions under this part (including, but not limited to, eligibility determinations, the calculation of benefits, and determinations about the method of payment of benefits) is permitted. In addition, no further administrative review of the Secretary's actions under this part is permitted unless the President specifically directs otherwise.

PART 110 [RESERVED]

SUBCHAPTER K—HEALTH RESOURCES DEVELOPMENT

PART 121—ORGAN PROCUREMENT AND TRANSPLANTATION NETWORK

Sec.
121.1 Applicability.
121.2 Definitions.
121.3 The OPTN.
121.4 OPTN Policies: Secretarial review and appeals.
121.5 Listing requirements.
121.6 Organ procurement.
121.7 Identification of organ recipient.
121.8 Allocation of organs.
121.9 Designated transplant program requirements.
121.10 Reviews, evaluation, and enforcement.
121.11 Record maintenance and reporting requirements.
121.12 Advisory Committee on Organ Transplantation.
121.13 Definition of Human Organ Under section 301 of the National Organ Transplant Act, as amended.

AUTHORITY: Sections 215, 371–376 of the Public Health Service Act (42 U.S.C. 216, 273–274d); sections 1102, 1106, 1138 and 1871 of the Social Security Act (42 U.S.C. 1302, 1306, 1320b–8 and 1395hh); and section 301 of the National Organ Transplant Act, as amended (42 U.S.C. 274e).

SOURCE: 63 FR 16332, Apr. 2, 1998, unless otherwise noted.

§ 121.1 Applicability.

(a) The provisions of this part, with the exception of § 121.13, apply to the operation of the Organ Procurement and Transplantation Network (OPTN) and to the Scientific Registry.

(b) The provisions of § 121.13 apply to the prohibition set forth in section 301 of the National Organ Transplant Act, as amended.

(c) In accordance with section 1138 of the Social Security Act, hospitals in which organ transplants are performed and which participate in the programs under titles XVIII or XIX of the Social Security Act, and organ procurement organizations designated under section 1138(b) of the Social Security Act, are subject to the requirements of this part.

[63 FR 16332, Apr. 2, 1998, as amended at 64 FR 56658, Oct. 20, 1999; 72 FR 10618, Mar. 9, 2007]

§ 121.2 Definitions.

As used in this part—

Act means the Public Health Service Act, as amended.

Designated transplant program means a transplant program that has been found to meet the requirements of § 121.9.

Family member means a family member of a transplant candidate, transplant recipient, or organ donor.

OPTN computer match program means a set of computer-based instructions which compares data on a cadaveric organ donor with data on transplant candidates on the waiting list and ranks the candidates according to OPTN policies to determine the priority for allocating the donor organ(s).

Organ means a human kidney, liver, heart, lung, pancreas, or intestine (including the esophagus, stomach, small and/or large intestine, or any portion of the gastrointestinal tract). Blood vessels recovered from an organ donor during the recovery of such organ(s) are considered part of an organ with which they are procured for purposes of this part if the vessels are intended for use in organ transplantation and labeled ''For use in organ transplantation only.''

Organ donor means a human being who is the source of an organ for transplantation into another human being.

Organ procurement organization or *OPO* means an entity so designated by the Secretary under section 1138(b) of the Social Security Act.

Organ procurement and transplantation network or *OPTN* means the network established pursuant to section 372 of the Act.

Potential transplant recipient or *potential recipient* means a transplant candidate who has been ranked by the OPTN computer match program as the person to whom an organ from a specific cadaveric organ donor is to be offered.

Scientific Registry means the registry of information on transplant recipients established pursuant to section 373 of the Act.

Secretary means the Secretary of Health and Human Services and any official of the Department of Health and Human Services to whom the authority involved has been delegated.

Transplant candidate means an individual who has been identified as medically suited to benefit from an organ transplant and has been placed on the waiting list by the individual's transplant program.

Transplant hospital means a hospital in which organ transplants are performed.

Transplant physician means a physician who provides non-surgical care and treatment to transplant patients before and after transplant.

Transplant program means a component within a transplant hospital which provides transplantation of a particular type of organ.

Transplant recipient means a person who has received an organ transplant.

Transplant surgeon means a physician who provides surgical care and treatment to transplant recipients.

Waiting list means the OPTN computer-based list of transplant candidates.

[63 FR 16332, Apr. 2, 1998, as amended at 64 FR 56658, Oct. 20, 1999; 72 FR 10619, Mar. 9, 2007; 72 FR 10925, Mar. 12, 2007]

§ 121.3 The OPTN.

(a) *Organization of the OPTN.* (1) The OPTN shall establish a Board of Directors of whatever size the OPTN determines appropriate. The Board of Directors shall include:

(i) Approximately 50 percent transplant surgeons or transplant physicians;

(ii) At least 25 percent transplant candidates, transplant recipients, organ donors and family members. These members should represent the diversity of the population of transplant candidates, transplant recipients, organ donors and family members served by the OPTN including, to the extent practicable, the minority and gender diversity of this population. These members shall not be employees of, or have a similar relationship with OPOs, transplant centers, voluntary health organizations, transplant coordinators, histocompatibility experts, or other non-physician transplant professionals; however, the Board may waive this requirement for not more than 50 percent of these members; and

(iii) Representatives of OPOs, transplant hospitals, voluntary health associations, transplant coordinators, histocompatibility experts, non-physician transplant professionals, and the general public.

(2) The Board of Directors shall elect an Executive Committee from the membership of the Board. The Executive Committee shall include at least one general public member, one OPO representative, approximately 50 percent transplant surgeons and transplant physicians, and at least 25 percent transplant candidates, transplant recipients, organ donors, and family members.

(3) The Board of Directors shall appoint an Executive Director of the OPTN. The Executive Director may be reappointed upon the Board's determination that the responsibilities of this position have been accomplished successfully.

(4) The Board of Directors shall establish such other committees as are necessary to perform the duties of the OPTN. Committees established by the Board of Directors shall include:

(i) Representation by transplant coordinators, organ procurement organizations, and transplant hospitals, and at least one transplant candidate, transplant recipient, organ donor or family member; and

(ii) To the extent practicable, minority and gender representation reflecting the diversity of the population of transplant candidates, transplant recipients, organ donors and family members served by the OPTN.

(b) *Membership of the OPTN.* (1) The OPTN shall admit and retain as members the following:

(i) All organ procurement organizations;

(ii) Transplant hospitals participating in the Medicare or Medicaid programs; and

(iii) Other organizations, institutions, and individuals that have an interest in the fields of organ donation or transplantation.

(2) To apply for membership in the OPTN:

(i) An OPO shall provide to the OPTN the name and address of the OPO, and the latest year of designation under section 1138(b) of the Social Security Act;

(ii) A transplant hospital shall provide to the OPTN the name and address of the hospital, a list of its transplant programs by type of organ; and

(iii) Any other organization, institution, or individual eligible under paragraph (c)(1)(iii) of this section shall demonstrate to the OPTN an interest in the fields of organ donation or transplantation.

(3) The OPTN shall accept or reject as members entities or individuals described in paragraph (c)(1)(iii) of this section within 90 days.

(4) Applicants rejected for membership in the OPTN may appeal to the Secretary. Appeals shall be submitted in writing within 30 days of rejection of the application. The Secretary may:

(i) Deny the appeal; or

(ii) Direct the OPTN to take action consistent with the Secretary's response to the appeal.

(c) *Corporate status of the OPTN.* (1) The OPTN shall be a private, not-for-profit entity.

(2) The requirements of this section do not apply to any parent, sponsoring, or affiliated organization of the OPTN, or to any activities of the contracting organization that are not integral to the operation of the OPTN. Such an organization is free to establish its own corporate procedures.

(3) No OPTN member is required to become a member of any organization that is a parent, sponsor, contractor, or affiliated organization of the OPTN, to comply with the by-laws of any such organization, or to assume any corporate duties or obligations of any such organization.

(d) *Effective date.* The organization designated by the Secretary as the OPTN shall have until June 30, 2000, or six months from its initial designation as the OPTN, whichever is later, to meet the requirements of this section, except that the Secretary may extend such period for good cause.

[63 FR 16332, Apr. 2, 1998, as amended at 63 FR 35847, July 1, 1998; 64 FR 56658, Oct. 20, 1999]

§ 121.4 OPTN policies: Secretarial review and appeals.

(a) The OPTN Board of Directors shall be responsible for developing, with the advice of the OPTN membership and other interested parties, policies within the mission of the OPTN as set forth in section 372 of the Act and the Secretary's contract for the operation of the OPTN, including:

(1) Policies for the equitable allocation of cadaveric organs in accordance with § 121.8;

(2) Policies, consistent with recommendations of the Centers for Disease Control and Prevention, for the testing of organ donors and follow-up of transplant recipients to prevent the spread of infectious diseases;

(3) Policies that reduce inequities resulting from socioeconomic status, including, but not limited to:

(i) Ensuring that payment of the registration fee is not a barrier to listing for patients who are unable to pay the fee;

(ii) Procedures for transplant hospitals to make reasonable efforts to obtain from all available sources, financial resources for patients unable to pay such that these patients have an opportunity to obtain a transplant and necessary follow-up care;

(iii) Recommendations to private and public payers and service providers on ways to improve coverage of organ transplantation and necessary follow-up care; and

(iv) Reform of allocation policies based on assessment of their cumulative effect on socioeconomic inequities;

(4) Policies regarding the training and experience of transplant surgeons and transplant physicians in designated transplant programs as required by § 121.9;

(5) Policies for nominating officers and members of the Board of Directors; and

(6) Policies on such other matters as the Secretary directs.

(b) The Board of Directors shall:

(1) Provide opportunity for the OPTN membership and other interested parties to comment on proposed policies and shall take into account the comments received in developing and

adopting policies for implementation by the OPTN; and

(2) Provide to the Secretary, at least 60 days prior to their proposed implementation, proposed policies it recommends to be enforceable under § 121.10 (including allocation policies). These policies will not be enforceable until approved by the Secretary. The Board of Directors shall also provide to the Secretary, at least 60 days prior to their proposed implementation, proposed policies on such other matters as the Secretary directs. The Secretary will refer significant proposed policies to the Advisory Committee on Organ Transplantation established under § 121.12, and publish them in the FEDERAL REGISTER for public comment. The Secretary also may seek the advice of the Advisory Committee on Organ Transplantation established under § 121.12 on other proposed policies, and publish them in the FEDERAL REGISTER for public comment. The Secretary will determine whether the proposed policies are consistent with the National Organ Transplant Act and this part, taking into account the views of the Advisory Committee and public comments. Based on this review, the Secretary may provide comments to the OPTN. If the Secretary concludes that a proposed policy is inconsistent with the National Organ Transplant Act or this part, the Secretary may direct the OPTN to revise the proposed policy consistent with the Secretary's direction. If the OPTN does not revise the proposed policy in a timely manner, or if the Secretary concludes that the proposed revision is inconsistent with the National Organ Transplant Act or this part, the Secretary may take such other action as the Secretary determines appropriate, but only after additional consultation with the Advisory Committee on the proposed action.

(c) The OPTN Board of Directors shall provide the membership and the Secretary with copies of its policies as they are adopted, and make them available to the public upon request. The Secretary will publish lists of OPTN policies in the FEDERAL REGISTER, indicating which ones are enforceable under § 121.10 or subject to potential sanctions of section 1138 of the Social Security Act. The OPTN shall also continuously maintain OPTN policies for public access on the Internet, including current and proposed policies.

(d) Any interested individual or entity may submit to the Secretary in writing critical comments related to the manner in which the OPTN is carrying out its duties or Secretarial policies regarding the OPTN. Any such comments shall include a statement of the basis for the comments. The Secretary will seek, as appropriate, the comments of the OPTN on the issues raised in the comments related to OPTN policies or practices. Policies or practices that are the subject of critical comments remain in effect during the Secretary's review, unless the Secretary directs otherwise based on possible risk to the health of patients or to public safety. The Secretary will consider the comments in light of the National Organ Transplant Act and the regulations under this part and may consult with the Advisory Committee on Organ Transplantation established under § 121.12. After this review, the Secretary may:

(1) Reject the comments;

(2) Direct the OPTN to revise the policies or practices consistent with the Secretary's response to the comments; or

(3) Take such other action as the Secretary determines appropriate.

(e) The OPTN shall implement policies and shall:

(1) Provide information to OPTN members about these policies and the rationale for them; and

(2) Update policies developed in accordance with this section to accommodate scientific and technological advances.

[63 FR 16332, Apr. 2, 1998, as amended at 64 FR 56658, Oct. 20, 1999]

§ 121.5 Listing requirements.

(a) A transplant hospital which is an OPTN member may list individuals, consistent with the OPTN's criteria under § 121.8(b)(1), only for a designated transplant program.

(b) Transplant hospitals shall assure that individuals are placed on the waiting list as soon as they are determined to be candidates for transplantation.

The OPTN shall advise transplant hospitals of the information needed for such listing.

(c) An OPTN member shall pay a registration fee to the OPTN for each transplant candidate it places on the waiting list. The amount of such fee shall be calculated to cover (together with contract funds awarded by the Secretary) the reasonable costs of operating the OPTN and shall be determined by the OPTN with the approval of the Secretary. No less often than annually, and whether or not a change is proposed, the OPTN shall submit to the Secretary a statement of its proposed registration fee, together with such supporting information as the Secretary finds necessary to determine the reasonableness or adequacy of the fee schedule and projected revenues. This submission is due at least three months before the beginning of the OPTN's fiscal year. The Secretary will approve, modify, or disapprove the amount of the fee within a reasonable time of receiving the OPTN's submission.

[63 FR 16332, Apr. 2, 1998, as amended at 64 FR 56659, Oct. 20, 1999]

§ 121.6 Organ procurement.

The suitability of organs donated for transplantation shall be determined as follows:

(a) *Tests*. An OPTN member procuring an organ shall assure that laboratory tests and clinical examinations of potential organ donors are performed to determine any contraindications for donor acceptance, in accordance with policies established by the OPTN.

(b) *HIV*. The OPTN shall adopt and use standards for preventing the acquisition of organs from individuals known to be infected with human immunodeficiency virus.

(c) *Acceptance criteria*. Transplant programs shall establish criteria for organ acceptance, and shall provide such criteria to the OPTN and the OPOs with which they are affiliated.

[63 FR 16332, Apr. 2, 1998, as amended at 64 FR 56659, Oct. 20, 1999]

§ 121.7 Identification of organ recipient.

(a) *List of potential transplant recipients*. (1) An OPTN member procuring an organ shall operate the OPTN computer match program within such time as the OPTN may prescribe to identify and rank potential recipients for each cadaveric organ procured.

(2) The rank order of potential recipients shall be determined for each cadaveric organ using the organ specific allocation criteria established in accordance with § 121.8.

(3) When a donor or donor organ does not meet a transplant program's donor acceptance criteria, as established under § 121.6(c), transplant candidates of that program shall not be ranked among potential recipients of that organ and shall not appear on a roster of potential recipients of that organ.

(b) *Offer of organ for potential recipients*. (1) Organs shall be offered for potential recipients in accordance with policies developed under § 121.8 and implemented under § 121.4.

(2) Organs may be offered only to potential recipients listed with transplant programs having designated transplant programs of the same type as the organ procured.

(3) An organ offer is made when all information necessary to determine whether to transplant the organ into the potential recipient has been given to the transplant hospital.

(4) A transplant program shall either accept or refuse the offered organ for the designated potential recipient within such time as the OPTN may prescribe. A transplant program shall document and provide to the OPO and to the OPTN the reasons for refusal and shall maintain this document for one year.

(c) *Transportation of organ to potential recipient*—(1) *Transportation*. The OPTN member that procures a donated organ shall arrange for transportation of the organ to the transplant hospital.

(2) *Documentation*. The OPTN member that is transporting an organ shall assure that it is accompanied by written documentation of activities conducted to determine the suitability of the organ donor and shall maintain this document for one year.

(3) *Packaging*. The OPTN member that is transporting an organ shall assure that it is packaged in a manner that is designed to maintain the viability of the organ.

(d) *Receipt of an organ*. Upon receipt of an organ, the transplant hospital responsible for the potential recipient's care shall determine whether to proceed with the transplant. In the event that an organ is not transplanted into the potential recipient, the OPO which has a written agreement with the transplant hospital must offer the organ for another potential recipient in accordance with paragraph (b)(2) of this section.

(e) *Blood vessels considered part of an organ*. A blood vessel that is considered part of an organ under this part shall be subject to the allocation requirements and policies pertaining to the organ with which the blood vessel is procured until and unless the transplant center receiving the organ determines that the blood vessel is not needed for the transplantation of that organ.

(f) *Wastage*. Nothing in this section shall prohibit a transplant program from transplanting an organ into any medically suitable candidate if to do otherwise would result in the organ not being used for transplantation. The transplant program shall notify the OPTN and the OPO which made the organ offer of the circumstances justifying each such action within such time as the OPTN may prescribe.

[63 FR 16332, Apr. 2, 1998, as amended at 64 FR 56659, Oct. 20, 1999; 72 FR 10925, Mar. 12, 2007]

§ 121.8 Allocation of organs.

(a) *Policy development*. The Board of Directors established under § 121.3 shall develop, in accordance with the policy development process described in § 121.4, policies for the equitable allocation of cadaveric organs among potential recipients. Such allocation policies:

(1) Shall be based on sound medical judgment;

(2) Shall seek to achieve the best use of donated organs;

(3) Shall preserve the ability of a transplant program to decline an offer of an organ or not to use the organ for the potential recipient in accordance with § 121.7(b)(4)(d) and (e);

(4) Shall be specific for each organ type or combination of organ types to be transplanted into a transplant candidate;

(5) Shall be designed to avoid wasting organs, to avoid futile transplants, to promote patient access to transplantation, and to promote the efficient management of organ placement;

(6) Shall be reviewed periodically and revised as appropriate;

(7) Shall include appropriate procedures to promote and review compliance including, to the extent appropriate, prospective and retrospective reviews of each transplant program's application of the policies to patients listed or proposed to be listed at the program; and

(8) Shall not be based on the candidate's place of residence or place of listing, except to the extent required by paragraphs (a)(1)–(5) of this section.

(b) *Allocation performance goals*. Allocation policies shall be designed to achieve equitable allocation of organs among patients consistent with paragraph (a) of this section through the following performance goals:

(1) Standardizing the criteria for determining suitable transplant candidates through the use of minimum criteria (expressed, to the extent possible, through objective and measurable medical criteria) for adding individuals to, and removing candidates from, organ transplant waiting lists;

(2) Setting priority rankings expressed, to the extent possible, through objective and measurable medical criteria, for patients or categories of patients who are medically suitable candidates for transplantation to receive transplants. These rankings shall be ordered from most to least medically urgent (taking into account, in accordance with paragraph (a) of this section, and in particular in accordance with sound medical judgment, that life sustaining technology allows alternative approaches to setting priority ranking for patients). There shall be a sufficient number of categories (if categories are used) to avoid grouping together patients with substantially different medical urgency;

(3) Distributing organs over as broad a geographic area as feasible under paragraphs (a)(1)–(5) of this section, and in order of decreasing medical urgency; and

(4) Applying appropriate performance indicators to assess transplant program performance under paragraphs (c)(2)(i) and (c)(2)(ii) of this section and reducing the inter-transplant program variance to as small as can reasonably be achieved in any performance indicator under paragraph (c)(2)(iii) of this section as the Board determines appropriate, and under paragraph (c)(2)(iv) of this section. If the performance indicator ''waiting time in status'' is used for allocation purposes, the OPTN shall seek to reduce the inter-transplant program variance in this indicator, as well as in other selected performance indicators, to as small as can reasonably be achieved, unless to do so would result in transplanting less medically urgent patients or less medically urgent patients within a category of patients.

(c) *Allocation performance indicators.* (1) Each organ-specific allocation policy shall include performance indicators. These indicators must measure how well each policy is:

(i) Achieving the performance goals set out in paragraph (b) of this section; and

(ii) Giving patients, their families, their physicians, and others timely and accurate information to assess the performance of transplant programs.

(2) Performance indicators shall include:

(i) Baseline data on how closely the results of current allocation policies approach the performance goals established under paragraph (b) of this section;

(ii) With respect to any proposed change, the amount of projected improvement in approaching the performance goals established under paragraph (b) of this section;

(iii) Such other indicators as the Board may propose and the Secretary approves; and

(iv) Such other indicators as the Secretary may require.

(3) For each organ-specific allocation policy, the OPTN shall provide to the Secretary data to assist the Secretary in assessing organ procurement and allocation, access to transplantation, the effect of allocation policies on programs performing different volumes of transplants, and the performance of OPOs and the OPTN contractor. Such data shall be required on performance by organ and status category, including program-specific data, OPO-specific data, data by program size, and data aggregated by organ procurement area, OPTN region, the Nation as a whole, and such other geographic areas as the Secretary may designate. Such data shall include the following measures of inter-transplant program variation: risk-adjusted total life-years pre-and post-transplant, risk-adjusted patient and graft survival rates following transplantation, risk-adjusted waiting time and risk-adjusted transplantation rates, as well as data regarding patients whose status or medical urgency was misclassified and patients who were inappropriately kept off a waiting list or retained on a waiting list. Such data shall cover such intervals of time, and be presented using confidence intervals or other measures of variance, as may be required to avoid spurious results or erroneous interpretation due to small numbers of patients covered.

(d) *Transition patient protections*—(1) *General.* When the OPTN revises organ allocation policies under this section, it shall consider whether to adopt transition procedures that would treat people on the waiting list and awaiting transplantation prior to the adoption or effective date of the revised policies no less favorably than they would have been treated under the previous policies. The transition procedures shall be transmitted to the Secretary for review together with the revised allocation policies.

(2) *Special rule for initial revision of liver allocation policies.* When the OPTN transmits to the Secretary its initial revision of the liver allocation policies, as directed by paragraph (e)(1) of this section, it shall include transition procedures that, to the extent feasible, treat each individual on the waiting list and awaiting transplantation on October 20, 1999 no less favorably than he or she would have been treated had the revised liver allocation policies not

become effective. These transition procedures may be limited in duration or applied only to individuals with greater than average medical urgency if this would significantly improve administration of the list or if such limitations would be applied only after accommodating a substantial preponderance of those disadvantaged by the change in the policies.

(e) *Deadlines for initial reviews.* (1) The OPTN shall conduct an initial review of existing allocation policies and, except as provided in paragraph (e)(2) of this section, no later than November 16, 2000 shall transmit initial revised policies to meet the requirements of paragraphs (a) and (b) of this section, together with supporting documentation to the Secretary for review in accordance with § 121.4.

(2) No later than March 16, 2000 the OPTN shall transmit revised policies and supporting documentation for liver allocation to meet the requirements of paragraphs (a) and (b) of this section to the Secretary for review in accordance with § 121.4. The OPTN may transmit these materials without seeking further public comment under § 121.4(b).

(f) *Secretarial review of policies, performance indicators, and transition patient protections.* The OPTN's transmittal to the Secretary of proposed allocation policies and performance indicators shall include such supporting material, including the results of model-based computer simulations, as the Secretary may require to assess the likely effects of policy changes and as are necessary to demonstrate that the proposed policies comply with the performance indicators and transition procedures of paragraphs (c) and (d) of this section.

(g) *Variances.* The OPTN may develop, in accordance with § 121.4, experimental policies that test methods of improving allocation. All such experimental policies shall be accompanied by a research design and include data collection and analysis plans. Such variances shall be time limited. Entities or individuals objecting to variances may appeal to the Secretary under the procedures of § 121.4.

(h) *Directed donation.* Nothing in this section shall prohibit the allocation of an organ to a recipient named by those authorized to make the donation.

[64 FR 56659, Oct. 20, 1999, as amended at 64 FR 71626, Dec. 21, 1999]

§ 121.9 Designated transplant program requirements.

(a) To receive organs for transplantation, a transplant program in a hospital that is a member of the OPTN shall abide by these rules and shall:

(1) Be a transplant program approved by the Secretary for reimbursement under Medicare; or

(2) Be an organ transplant program which has adequate resources to provide transplant services to its patients and agrees promptly to notify the OPTN and patients awaiting transplants if it becomes inactive and which:

(i) Has letters of agreement or contracts with an OPO;

(ii) Has on site a transplant surgeon qualified in accordance with policies developed under § 121.4;

(iii) Has on site a transplant physician qualified in accordance with policies developed under § 121.4;

(iv) Has available operating and recovery room resources, intensive care resources and surgical beds and transplant program personnel;

(v) Shows evidence of collaborative involvement with experts in the fields of radiology, infectious disease, pathology, immunology, anesthesiology, physical therapy and rehabilitation medicine, histocompatibility, and immunogenetics and, as appropriate, hepatology, pediatrics, nephrology with dialysis capability, and pulmonary medicine with respiratory therapy support;

(vi) Has immediate access to microbiology, clinical chemistry, histocompatibility testing, radiology, and blood banking services, as well as the capacity to monitor treatment with immunosuppressive drugs; and

(vii) Makes available psychiatric and social support services for transplant candidates, transplant recipients, and their families; or

(3) Be a transplant program in a Department of Veterans Affairs, Department of Defense, or other Federal hospital.

(b) To apply to be a designated transplant program, transplant programs shall provide to the OPTN such documents as the OPTN may require which show that they meet the requirements of § 121.9(a) (1), (2), or (3).

(c) The OPTN shall, within 90 days, accept or reject applications to be a designated transplant program.

(d) Applicants rejected for designation may appeal to the Secretary. Appeals shall be submitted in writing within 30 days of rejection of the application. The Secretary may:

(1) Deny the appeal; or

(2) Direct the OPTN to take action consistent with the Secretary's response to the appeal.

[63 FR 16332, Apr. 2, 1998, as amended at 64 FR 56660, Oct. 20, 1999]

§ 121.10 Reviews, evaluation, and enforcement.

(a) *Review and evaluation by the Secretary.* The Secretary or her/his designee may perform any reviews and evaluations of member OPOs and transplant programs which the Secretary deems necessary to carry out her/his responsibilities under the Public Health Service Act and the Social Security Act.

(b) *Review and evaluation by the OPTN.* (1) The OPTN shall design appropriate plans and procedures, including survey instruments, a peer review process, and data systems, for purposes of:

(i) Reviewing applications submitted under § 121.3(c) for membership in the OPTN;

(ii) Reviewing applications submitted under § 121.9(b) to be a designated transplant program; and

(iii) Conducting ongoing and periodic reviews and evaluations of each member OPO and transplant hospital for compliance with these rules and OPTN policies.

(2) Upon the approval of the Secretary, the OPTN shall furnish review plans and procedures, including survey instruments and a description of data systems, to each member OPO and transplant hospital. The OPTN shall furnish any revisions of these documents to member OPOs and hospitals, after approval by the Secretary, prior to their implementation.

(3) At the request of the Secretary, the OPTN shall conduct special reviews of OPOs and transplant programs, where the Secretary has reason to believe that such entities may not be in compliance with these rules or OPTN policies or may be acting in a manner which poses a risk to the health of patients or to public safety. The OPTN shall conduct these reviews in accordance with such schedules as the Secretary specifies and shall make periodic reports to the Secretary of progress on such reviews and on other reviews conducted under the requirements of this paragraph.

(4) The OPTN shall notify the Secretary in a manner prescribed by the Secretary within 3 days of all committee and Board of Directors meetings in which transplant hospital and OPO compliance with these regulations or OPTN policies is considered.

(c) *Enforcement of OPTN rules*—(1) *OPTN recommendations.* The Board of Directors shall advise the Secretary of the results of any reviews and evaluations conducted under paragraph (b)(1)(iii) or paragraph (b)(3) of this section which, in the opinion of the Board, indicate noncompliance with these rules or OPTN policies, or indicate a risk to the health of patients or to the public safety, and shall provide any recommendations for appropriate action by the Secretary. Appropriate action may include removal of designation as a transplant program under § 121.9, termination of a transplant hospital's participation in Medicare or Medicaid, termination of a transplant hospital's reimbursement under Medicare and Medicaid, termination of an OPO's reimbursement under Medicare and Medicaid, if the noncompliance is with a policy designated by the Secretary as covered by section 1138 of the Social Security Act, or such other compliance or enforcement measures contained in policies developed under § 121.4.

(2) *Secretary's action on recommendations.* Upon the Secretary's review of the Board of Directors' recommendations, the Secretary may:

(i) Request further information from the Board of Directors or the alleged violator, or both;

(ii) Decline to accept the recommendation;

(iii) Accept the recommendation, and notify the alleged violator of the Secretary's decision; or

(iv) Take such other action as the Secretary deems necessary.

[63 FR 16332, Apr. 2, 1998, as amended at 64 FR 56661, Oct. 20, 1999]

§ 121.11 Record maintenance and reporting requirements.

(a) *Record maintenance.* Records shall be maintained and made available subject to OPTN policies and applicable limitations based on personal privacy as follows:

(1) The OPTN and the Scientific Registry, as appropriate, shall:

(i) Maintain and operate an automated system for managing information about transplant candidates, transplant recipients, and organ donors, including a computerized list of individuals waiting for transplants;

(ii) Maintain records of all transplant candidates, all organ donors and all transplant recipients;

(iii) Operate, maintain, receive, publish, and transmit such records and information electronically, to the extent feasible, except when hard copy is requested; and

(iv) In making information available, provide manuals, forms, flow charts, operating instructions, or other explanatory materials as necessary to understand, interpret, and use the information accurately and efficiently.

(2) *Organ procurement organizations and transplant programs*—(i) *Maintenance of records.* All OPOs and transplant programs shall maintain such records pertaining to each potential donor identified, each organ retrieved, each recipient transplanted and such other transplantation-related matters as the Secretary deems necessary to carry out her/his responsibilities under the Act. The OPO or transplant program shall maintain these records for seven years.

(ii) *Access to facilities and records.* OPOs and transplant hospitals shall permit the Secretary and the Comptroller General, or their designees, to inspect facilities and records pertaining to any aspect of services performed related to organ donation and transplantation.

(b) *Reporting requirements.* (1) The OPTN and the Scientific Registry, as appropriate, shall:

(i) In addition to special reports which the Secretary may require, submit to the Secretary a report not less than once every fiscal year on a schedule prescribed by the Secretary. The report shall include the following information in a form prescribed by the Secretary:

(A) Information that the Secretary prescribes as necessary to assess the effectiveness of the Nation's organ donation, procurement and transplantation system;

(B) Information that the Secretary deems necessary for the report to Congress required by Section 376 of the Act; and,

(C) Any other information that the Secretary prescribes.

(ii) Provide to the Scientific Registry data on transplant candidates and recipients, and other information that the Secretary deems appropriate. The information shall be provided in the form and on the schedule prescribed by the Secretary;

(iii) Provide to the Secretary any data that the Secretary requests;

(iv) Make available to the public timely and accurate program-specific information on the performance of transplant programs. This shall include free dissemination over the Internet, and shall be presented, explained, and organized as necessary to understand, interpret, and use the information accurately and efficiently. These data shall be updated no less frequently than every six months (or such longer period as the Secretary determines would provide more useful information to patients, their families, and their physicians), and shall include risk-adjusted probabilities of receiving a transplant or dying while awaiting a transplant, risk-adjusted graft and patient survival following the transplant, and risk-adjusted overall survival following listing for such intervals as the Secretary shall prescribe. These data shall include confidence intervals or other measures that provide information on the extent to which chance

may influence transplant program-specific results. Such data shall also include such other cost or performance information as the Secretary may specify, including but not limited to transplant program-specific information on waiting time within medical status, organ wastage, and refusal of organ offers. These data shall also be presented no more than six months later than the period to which they apply;

(v) Respond to reasonable requests from the public for data needed for bona fide research or analysis purposes, to the extent that the OPTN's or Scientific Registry's resources permit, or as directed by the Secretary. The OPTN or the Scientific Registry may impose reasonable charges for the separable costs of responding to such requests. Patient-identified data may be made available to bona fide researchers upon a showing that the research design requires such data for matching or other purposes, and that appropriate confidentiality protections, including destruction of patient identifiers upon completion of matching, will be followed. All requests shall be processed expeditiously, with data normally made available within 30 days from the date of request;

(vi) Respond to reasonable requests from the public for data needed to assess the performance of the OPTN or Scientific Registry, to assess individual transplant programs, or for other purposes. The OPTN or Scientific Registry may impose charges for the separable costs of responding to such requests. An estimate of such charges shall be provided to the requester before processing the request. All requests should be processed expeditiously, with data normally made available within 30 days from the date of request; and

(vii) Provide data to an OPTN member, without charge, that has been assembled, stored, or transformed from data originally supplied by that member.

(2) An organ procurement organization or transplant hospital shall, as specified from time to time by the Secretary, submit to the OPTN, to the Scientific Registry, as appropriate, and to the Secretary information regarding transplantation candidates, transplant recipients, donors of organs, transplant program costs and performance, and other information that the Secretary deems appropriate. Such information shall be in the form required and shall be submitted in accordance with the schedule prescribed. No restrictions on subsequent redisclosure may be imposed by any organ procurement organization or transplant hospital.

(c) *Public access to data*. The Secretary may release to the public information collected under this section when the Secretary determines that the public interest will be served by such release. The information which may be released includes, but is not limited to, information on the comparative costs and patient outcomes at each transplant program affiliated with the OPTN, transplant program personnel, information regarding instances in which transplant programs refuse offers of organs to their patients, information regarding characteristics of individual transplant programs, information regarding waiting time at individual transplant programs, and such other data as the Secretary determines will provide information to patients, their families, and their physicians that will assist them in making decisions regarding transplantation.

[63 FR 16332, Apr. 2, 1998, as amended at 64 FR 56661, Oct. 20, 1999]

§ 121.12 Advisory Committee on Organ Transplantation.

The Secretary will establish, consistent with the Federal Advisory Committee Act, the Advisory Committee on Organ Transplantation. The Secretary may seek the comments of the Advisory Committee on proposed OPTN policies and such other matters as the Secretary determines.

[64 FR 56661, Oct. 20, 1999]

§ 121.13 Definition of Human Organ Under section 301 of the National Organ Transplant Act, as amended.

''Human organ,'' as covered by section 301 of the National Organ Transplant Act, as amended, means the human (including fetal) kidney, liver, heart, lung, pancreas, bone marrow, cornea, eye, bone, skin, and intestine,

including the esophagus, stomach, small and/or large intestine, or any portion of the gastrointestinal tract.

[72 FR 10619, Mar. 9, 2007]

PART 124—MEDICAL FACILITY CONSTRUCTION AND MODERNIZATION

Subpart A—Project Grants for Public Medical Facility Construction and Modernization

Sec.
124.1 Applicability.
124.2 Definitions.
124.3 Eligibility.
124.4 Application.
124.5 Grant evaluation and award.
124.6 Grant payments.
124.7 Use of grant funds.
124.8 Grantee accountability.
124.9 Nondiscrimination.
124.10 Additional conditions.
124.11 Applicability of 45 CFR part 74.

Subparts B–E [Reserved]

Subpart F—Reasonable Volume of Uncompensated Services To Persons Unable to Pay

124.501 Applicability.
124.502 Definitions.
124.503 Compliance level.
124.504 Notice of availability of uncompensated services.
124.505 Eligibility criteria.
124.506 Allocation of services; plan requirement.
124.507 Written determinations of eligibility.
124.508 Cessation of uncompensated services.
124.509 Reporting requirements.
124.510 Record maintenance requirements.
124.511 Investigation and determination of compliance.
124.512 Enforcement.
124.513 Public facility compliance alternative.
124.514 Compliance alternative for facilities with small annual obligations.
124.515 Compliance alternative for community health centers, migrant health centers and certain National Health Service Corps sites.
124.516 Charitable facility compliance alternative.
124.517 Unrestricted availability compliance alternative for Title VI-assisted facilities.
124.518 Agreements with State agencies.

Subpart G—Community Service

124.601 Applicability.
124.602 Definitions.
124.603 Provision of services.
124.604 Posted notice.
124.605 Reporting and record maintenance requirements.
124.606 Investigation and enforcement.
124.607 Agreements with State agencies.
APPENDIX TO SUBPART G—INTERIM PROCEDURES AND CRITERIA FOR REVIEW BY HEALTH SYSTEMS AGENCIES OF APPLICATIONS UNDER SECTION 1625 OF THE PUBLIC HEALTH SERVICE ACT

Subpart H—Recovery of Grant Funds

124.701 Applicability.
124.702 Definitions.
124.703 Federal right of recovery.
124.704 Notification of sale, transfer, or change of use.
124.705 Amount of recovery.
124.706 Calculation of interest.
124.707 Waiver of recovery where facility is sold or transferred to a proprietary entity.
124.708 Waiver of recovery—good cause for other use of facility.
124.709 Withdrawal of waiver.

AUTHORITY: Secs. 215, 1602, 1625, Public Health Service Act (42 U.S.C. 216, 300o–1, 300r), unless otherwise noted.

SOURCE: 42 FR 62270, Dec. 9, 1977, unless otherwise noted.

Subpart A—Project Grants for Public Medical Facility Construction and Modernization

§ 124.1 Applicability.

The regulations of this subpart are applicable to grants under section 1625 of the Public Health Service Act for construction and modernization projects designed to:

(a) Eliminate or prevent imminent safety hazards as defined by Federal, State or local fire, building, or life safety codes or regulations, or

(b) Avoid noncompliance with State or voluntary licensure or accreditation standards.

§ 124.2 Definitions.

As used in this subpart:

(a) *Act* means the Public Health Service Act, as amended.

(b) *Construction* means construction of new buildings and initial equipment of such buildings and, in any case in

which it will help to provide a service not previously provided in the community, equipment of any buildings. It includes architect's fees, but excludes the cost of off-site improvements and, except with respect to public health centers, the cost of the acquistion of land.

(c) *Cost* means the amount found by the Secretary to be necessary for construction or modernization under a project, except that such term does not include any amount found by the Secretary to be attributable to expansion of the bed capacity of any facility.

(d) *Equipment* means those items which are necessary for the functioning of the facility but does not include items of current operating expense such as food, fuel, pharmaceuticals, dressings, paper, printed forms, and housekeeping supplies.

(e) *Facility for long-term care* means a facility (including a skilled nursing care or intermediate care facility), providing inpatient care for convalescent or chronic disease patients who require skilled nursing or intermediate care and related medical services:

(1) Which is a hospital (other than a hospital primarily for the care and treatment of mentally ill or tuberculosis patients) or is operated in connection with a hospital, or

(2) In which such care and medical services are prescribed by, or are performed under the general direction of, persons licensed to practice medicine or surgery in the State.

(f) *Health systems agency* means an agency which has been conditionally or fully designated pursuant to section 1515 of the Act and 42 CFR part 122.

(g) *Hospital* includes general, tuberculosis, and other types of hospitals, and related facilities such as laboratories, outpatient departments, nurses' home facilities, extended care facilities, facilities related to programs for home health services, self-care units, and central service facilities, operated in connection with hospitals, and education or training facilities for health professional personnel operated as an integral part of a hospital, but does not include any facility furnishing primarily domiciliary care.

(h) *Major repair* means those repairs to an existing building, excluding routine maintenance, which restore the building to a sound state, the cost of which is a least 10 percent of plant value or $200,000, whichever is greater. *Plant value* means the historic book value of the building at the time of application for assistance under this subpart.

(i) *Medical facility* means a hospital, public health center, outpatient medical facility, rehabilitation facility, or a facility for long-term care.

(j) *Modernization* means the alteration, expansion (excluding expansion which increases bed capacity), major repair, remodeling, replacement, and renovation of existing buildings (including initial equipment thereof), and the replacement of obsolete equipment of existing buildings, including energy conservation projects.

(k) *Outpatient medical facility* means a facility, located in or apart from a hospital, for the diagnosis or diagnosis and treatment of ambulatory patients (including ambulatory inpatients):

(1) Which is operated in connection with a hospital, or

(2) In which patient care of a specialized nature (such as in an eye clinic, dental clinic, or ambulatory surgical center) is provided under the professional supervision of persons licensed to practice medicine or surgery in the State, or in the case of dental diagnosis or treatment, under the professional supervision of persons licensed to practice dentistry in the State, or

(3) Which offers to patients not requiring hospitalization the services of licensed physicians in various medical specialties, and which provides to its patients a reasonably full range of diagnostic and treatment services.

(l) *Public health center* means a publicly owned facility for the provision of public health services, including related facilities such as laboratories, clinics, and administrative offices operated in connection with such a facility.

(m) *Quasi-public corporation* means a private, nonprofit corporation which has been formally given one or more governmental powers by a general-purpose unit of government to enable it to carry out its work.

(n) *Rehabilitation facility* means a facility which is operated for the primary purpose of assisting in the rehabilitation of disabled persons through an integrated program of medical evaluation and services, and psychological, social, or vocational evaluation and services, under competent professional supervision, and in the case of which the major portion of the required evaluation and services is furnished within the facility; and either the facility is operated in connection with a hospital, or all medical and related health services are prescribed by, or are under the general direction of persons licensed to practice medicine or surgery in the State.

(o) *Secretary* means the Secretary of Health and Human Services and any other officer or employee of the Department of Health and Human Services to whom the authority involved has been delegated.

(p) *State* means any one of the several States, the Commonwealth of Puerto Rico, Guam, American Samoa, the Trust Territory of the Pacific Islands, the Virgin Islands, and the District of Columbia.

(q) *State health planning and development agency* or *State Agency* means the agency of a State government which has been conditionally or fully designated under section 1521 of the Act and 42 CFR part 123.

(r) *Title* means a fee simple, or such other estate or interest in the project site (including a leasehold on which the rental does not exceed 4 percent of the value of the land) as the Secretary finds sufficient to assure undisturbed use and possession for the purpose of construction or modernization and operation of the project for a period of not less than twenty years.

(s) *Urban or rural poverty area* means a census tract, census county division, or minor civil division, as applicable, in which the percentage of the residents with incomes below the poverty level, as defined by the Secretary of Commerce is not less than the percentage derived in accordance with the following sentence. This percentage shall be derived so that the percentage of the total population of the United States residing in all such areas is equal to the percentage of the total population of the United States with incomes below such poverty level, plus five percent.

§ 124.3 Eligibility.

(a) *Eligible applicants*. A grant under section 1625 may only be made to a State or political subdivision of a State, including any city, town, county, borough, hospital district authority, or public or quasi-public corporation for a project described in paragraph (b) of this section for a medical facility owned, operated, or owned and operated by the State or political subdivision.

(b) *Eligible project*. A grant under section 1625 may be made only for a construction and/or modernization project designed to:

(1) Eliminate or prevent safety hazards which under Federal, State, and/or local fire, building or life safety codes or regulations, will, in the judgment of the Secretary result in one or more of the following:

(i) Loss of licensure for the facility.

(ii) Closing of all or a substantial part of the facility,

(iii) Loss of eligibility for reimbursement under title XVIII or title XIX of the Social Security Act; or

(2) Avoid noncompliance with State licensure or voluntary accreditation standards where noncompliance will, in the judgment of the Secretary, result in one or both of the following:

(i) Loss of licensure for the facility,

(ii) Loss of accreditation resulting in loss of eligibility for reimbursement under title XVIII or title XIX of the Social Security Act.

§ 124.4 Application.

An application for a grant under this subpart must be submitted directly to the Secretary at such time and in such form and manner as the Secretary may prescribe. The application must be executed by an individual authorized to act for the applicant and assume on behalf of the applicant the obligations imposed by the Act, this subpart, and the terms and conditions of the grant. The application must contain the following:

(a) A description of the site of the project.

(b) A full description, with all appropriate documentation, of:

(1) The imminent safety hazards, licensure and/or accreditation problems of the facility;

(2) The type and amount of assistance sought under this subpart;

(3) The construction of modernization project for which funds are sought, describing how it will remedy the problems described pursuant to paragraph (b)(1) of this section, with a complete schedule for the proposed construction or modernization; and

(4) How failure to remedy the problems described pursuant to paragraph (b) (1) of this section will affect the population served by the facility.

(c) In the case of a modernization project for continuation of existing health services, a finding by the State Agency of the continued need for such services. In the case of a construction or modernization project for new health services, a finding by the State Agency of the need for such services. The finding of need shall be based on the following criteria:

(1) In a State which has a program approved by the Secretary under section 1523(a)(4)(B) of the Act, a State certificate of need program, or a program under section 1122 of the Social Security Act, the State Agency shall use the criteria used in conducting reviews under such program. In a State which has more than one such program, the State Agency shall use the criteria of one of the programs and notify the Secretary of the program criteria used.

(2) In a State which does not have a program approved by the Secretary under section 1523(a)(4)(B) of the Act, a State certificate of need program or a program under section 1122 of the Social Security Act, the State Agency shall base its finding of need on the following criteria:

(i) Whether the proposed project is needed or projected as necessary to meet the needs in the community in terms of health services required; *Provided*, That projects for highly specialized services (such as open-heart surgery, renal transplantation, or radiation therapy) which will draw from patient populations outside the community in which the project is situated will receive appropriate consideration;

(ii) Whether the proposed project can be adquately staffed and operated when completed;

(iii) Whether the proposed capital expenditure is economically feasible and can be accommodated in the patient charge structure of the health facility without unreasonable increases; and

(iv) Whether the project will foster cost containment or improved quality of care through improved efficiency and productivity, including promotion of cost-effective factors such as ambulatory care, preventive health care services, home health care, and design and construction economies, or through increased competition between different health services delivery systems.

(d) [Reserved]

(e) An assurance that adequate financial support will be available for completion of the project, supported by a detailed project budget satisfactory to the Secretary which includes all existing and anticipated sources of funds for the project.

(f) An assurance that adequate financial support will be available for maintenance and operation of the project when completed, supported by budgets and detailed expenditure and revenue information satisfactory to the Secretary for both the facility and the applicant for the past three fiscal years and budget and projections of expenditures and revenue for the future three fiscal years. Where a certificate of need or a favorable finding under section 1122 of the Social Security Act is required in order for the project to operate and/or receive reimbursement from governmental programs for health services provided, assurance from the applicant satisfactory to the Secretary that the applicant will submit, consistent with the provisions of § 124.5(d), any such required certificates of need and/or section 1122 finding.

(g) An assurance that the applicant would not be able to complete the project without the grant applied for, supported by a description of all efforts to obtain funds needed to complete the project and the results of such efforts.

(h) An assurance that all times after the application is approved there will

be made available in the facility or portion thereof to be constructed or modernized, a reasonable volume of services to persons unable to pay therefor. The applicant shall comply with the standards and procedures of 42 CFR 53.111, except as the Secretary may prescribe pursuant to section 1602(6) of the Act. The functions of the State Agency designated under section 604 of the Act under 42 CFR 53.111 will be performed by the Secretary, except to the extent they are otherwise assigned.

(i) An assurance that at all times after the application is approved the facility or portion thereof to be constructed or modernized will be made available to all persons residing or employed in the area served by the facility. The applicant shall comply with the standards and procedures of 42 CFR 53.113, except as the Secretary may prescribe pursuant to section 1602(6) of the Act. The functions of the State Agency designated under section 604 of the Act under 42 CFR 53.113 will be performed by the Secretary, except to the extent they are otherwise assigned.

(j) An assurance that title to the project site is or will be vested in one or more of the entities filing the application or in a public or other nonprofit entity which is to operate the facility on completion of the project, with such documentation as the Secretary may require.

(k) In the case of an application for construction or modernization of an outpatient medical facility, an assurance, supported by a written transfer agreement (or written documentation that such agreement will be obtained) with identified hospitals, that the services of a general hospital will be available to patients at such facility who are in need of hospital care.

(l) Evidence that: (1) The appropriate health systems agency has been given the opportunity to review the application in accordance with section 1513(e) of the Act and the requirements of the appendix to this subpart, with the result of any such review.

(2) The application has been reviewed in accordance with the applicable requirements of OMB Circular A–95.

(m) An analysis satisfactory to the Secretary and such other information and materials as the Secretary may require concerning the environmental impact of the proposed construction or modernization project.

(n) An assessment satisfactory to the Secretary of the project site in light of the considerations set forth in Executive Order 11296 (31 FR 10663, August 10, 1966) concerning the evaluation of flood hazards in locating Federally supported facilities.

(o) In the case of a project which involves the displacement of persons or businesses, an assurance that the applicant will comply with the applicable provisions of the Uniform Relocation Assistance and Real Property Acquisition Policies Act of 1970 (42 U.S.C. 4601 *et seq.*).

(p)(1) An assurance that all laborers and mechanics employed by contractors or subcontractors in the performance of work on a project will be paid wages at rates not less than those prevailing on similar construction in the locality as determined by the Secretary of Labor in accordance with the Act of March 3, 1931 (40 U.S.C. 276a–276a–5, known as the Davis-Bacon Act); and

(2) An assurance that the following conditions and provisions will be included in all construction contracts:

(i) The provisions of ''DHHS Requirements for Federally Assisted Construction Contracts Regarding Labor Standards and Equal Employment Opportunity,'' Form DHHS 514 (rev. July 1976) (issued by the Office of Grants and Procurement Management, U.S. Department of Health and Human Services) pertaining to the Davis-Bacon Act, the Contract Work Hours Standards Act, and the Copeland Act (Anti-Kickback) regulations except in the case of contracts in the amount of $2,000 or less; and pertaining to Executive Order 11246, September 24, 1965 (30 FR 12319), relating to nondiscrimination in construction contract employment except in the case of contracts in the amount of $10,000 or less, and

(ii) Representatives of the Secretary will have access at all reasonable times to work wherever it is in preparation or progress, and the contractor shall provide proper facilities for such access and inspection.

(q) Such other information as the Secretary may require.

[42 FR 62270, Dec. 9, 1977, as amended at 49 FR 33021, Aug. 20, 1984]

§ 124.5 Grant evaluation and award.

(a)(1) Within the limits of funds available for such purpose, the Secretary may award grants under this subpart for project costs to applicants with approvable applications therefor which will, in his judgment, best promote the purposes of section 1625 of the Act, taking into consideration:

(i) The severity and seriousness of the safety hazard, licensure or accreditation problem or problems.

(ii) The relative need of the population to be served for the services to be provided, including the availability of alternatives for meeting the need.

(iii) The financial need of the applicant.

(iv) The extent to which the facility will serve persons below the poverty level, as determined by the Secretary of Commerce.

(v) The extent to which the project will foster cost containment or improve the quality of care through enhanced efficiency and productivity.

(2) Priority for funding shall be based on the extent to which services will be made available relative to the cost of the project.

(b) The amount of any grant under this subpart may not exceed 75 percent of the cost of the project for which the grant is made unless the project is located in an area determined by the Secretary to be an urban or rural poverty area, in which case the grant may, as determined by the Secretary, cover up to 100 percent of such costs.

(c) If an applicant has not entered into a legally enforceable fixed price contract for the project for which funds are awarded under this subpart within 180 days of the date of the grant award, the grant award will automatically become null and void.

(d) Where a grant has been awarded to an applicant under this subpart on the condition that any applicable certificates of need and section 1122 finding required under § 124.4(f) will be provided, if such certificates and finding have not been received by the Secretary within 180 days of the grant award, the grant award will automatically become null and void.

§ 124.6 Grant payments.

Grant payments shall be made to the applicant in accordance with the requirements of subpart K of 45 CFR part 74.

§ 124.7 Use of grant funds.

Any funds granted pursuant to this subpart, as well as funds assured by the applicant for the project, shall be expended solely for carrying out the approved project in accordance with section 1625 of the Act, the regulations of this subpart, the terms and conditions of the grant award, and the applicable cost principles prescribed by subpart Q of 45 CFR part 74.

§ 124.8 Grantee accountability.

(a) *Records requirements.* (1) Applicants who have received Federal assistance under this subpart shall maintain, in accounting records which are separate from the records of all other funds, records which fully disclose the following:

(i) The amount of all payments received from the Secretary under this subpart,

(ii) Amounts and sources of all funds, in addition to funds received under this subpart, applied to the construction or modernization project funded under this subpart,

(iii) Disposition of all funds for the construction or modernization project funded under this subpart,

(iv) Total cost of the project approved under this subpart, and

(2) Upon request, applicants shall make such records, books, papers, or other documents available to the Secretary and the Comptroller General of the United States or any of their duly authorized representatives which, in their opinion, may be related or pertinent to the grant under this subpart.

(b) *Annual financial statement.* An applicant who receives grant assistance under this subpart shall, not later than 120 days after the end of its fiscal year, unless a longer period is approved by the Secretary for good cause shown, file an annual financial statement which meets the requirements of section 1634 of the Act.

§ 124.9 Nondiscrimination.

(a) Attention is called to the requirements of title VI of the Civil Rights Act of 1964 (78 Stat. 252, 42 U.S.C. 2000d *et seq.*) and in that particular section 601 of such Act which provides that no person in the United States shall, on the grounds of race, color or national origin be excluded from participation in, be denied the benefits of, or be subjected to discrimination under any program or activity receiving Federal financial assistance. A regulation implementing such title VI, which is applicable to grants made under this subpart, has been issued by the Secretary with the approval of the President (45 CFR part 80).

(b) Attention is called to the requirements of section 504 of the Rehabilitation Act of 1973, as amended, which provides that no otherwise qualified handicapped individual in the United States shall, solely by reason of the handicap, be excluded from participation in, be denied the benefits of, or be subjected to discrimination under any program or activity receiving Federal financial assistance. A regulation implementing section 504 has been issued (45 CFR part 84 (42 FR 22676, May 4, 1977)).

(c) All portions and services of the entire facility for the construction or modernization of which, or in connection with which aid under the Act is sought must be made available without discrimination on account of creed and the applicant may not discriminate against any qualified person on account of creed with respect to the privilege of professional practice in the facility.

(d) Attention is also called to the requirements of title IX of the Education amendments of 1972 and in particular to section 901 of such Act (20 U.S.C. 1681) which provides that no person in the United States shall, on the basis of sex be excluded from participation in, be denied the benefits of, or be subjected to discrimination under any education program or activity receiving Federal financial assistance (45 CFR part 86).

(e) Each construction contract is subject to the condition that the applicant shall comply with the requirements of section 321 of the Comprehensive Alcohol Abuse and Alcoholism Prevention, Treatment, and Rehabilitation Act of 1970, as amended, which provides that alcohol abusers and alcoholics who are suffering from medical conditions shall not be discriminated against in admission or treatment, solely because of their alcohol abuse or alcoholism by any private or public general hospital that receives support in any form from any federally funded program.

(f) Each construction contract is subject to the condition that the applicant shall comply with the requirements of section 407 of the Drug Abuse Office and Treatment Act of 1972, as amended, which provides that drug abusers who are suffering from medical conditions shall not be discriminated against because of their drug abuse or drug dependence, by any private or public general hospital that receives support in any form from any federally funded program.

§ 124.10 Additional conditions.

The Secretary may impose additional conditions prior to or at the time of any grant award when in the Secretary's judgment such conditions are necessary to assure or protect advancement of the project in accordance with the purposes of the Act and the regulations of this subpart or the conservation of grant funds.

§ 124.11 Applicability of 45 CFR part 74.

The provisions of 45 CFR part 74, establishing uniform administrative requirements and cost principles, shall apply to all grants under this subpart to State and local governments as those terms are defined in subpart A of that part 74, except to the extent inconsistent with this subpart. The relevant provisions of the following subparts of part 74 shall also apply to grants to all other grantee organizations under this subpart.

45 CFR PART 74

Subpart:
A General.
B Cash depositories.
C Bonding and insurance.
F Grant-related income.
G Matching and cost sharing.
L Budget revision procedures.

M Grant closeout, suspension, and termination.
O Property.
P Procurement standards.
Q Cost principles.

Subparts B–E [Reserved]

Subpart F—Reasonable Volume of Uncompensated Services to Persons Unable To Pay

AUTHORITY: 42 U.S.C. 216; 42 U.S.C. 300s(3).

SOURCE: 52 FR 46031, Dec. 3, 1987, unless otherwise noted.

§ 124.501 Applicability.

(a) The provisions of this subpart apply to any recipient of Federal assistance under title VI or XVI of the Public Health Service Act that gave an assurance that it would make available, in the facility or portion of the facility constructed, modernized or converted with that assistance, a reasonable volume of services to persons unable to pay for the services.

(b) The provisions of this subpart apply to facilities for the following periods:

(1) *Facilities assisted under title VI.* Except as otherwise herein provided, a facility assisted under title VI of the Act shall provide uncompensated services at the annual compliance level required by § 124.503(a) for:

(i) Twenty years after the completion of construction, in the case of a facility for which the Secretary provided grant assistance under section 606 of the Act; or

(ii) The period from completion of construction until the amount of a direct loan under sections 610 and 623 of the Act, or the amount of a loan with respect to which the Secretary provided a guarantee and interest subsidy under section 623 of the Act, is repaid, in the case of a facility for which such a loan was made.

(iii) ''Completion of construction'' means:

(A) The date on which the Secretary determines the facility was opened for service;

(B) If the opening date is not available, it means the date on which the Secretary approved the final part of the facility's application for assistance under title VI of the Act;

(C) If the date of final approval is not available, it means whatever date the Secretary determines most reasonably approximates the date of final approval.

(2) *Facilities assisted under title XVI.* The provisions of this subpart apply to a facility assisted under title XVI of the Act at all times following the Secretary's approval of the facility's application for assistance under title XVI, except that if the facility does not at the time of that approval provide health services, the assurance applies at all times following the facility's initial provision of health services to patients, as determined by the Secretary.

§ 124.502 Definitions.

As used in this subpart—

(a) *Act* means the Public Health Service Act, as amended.

(b) *Allowable credit* for services provided to a specific patient means the lesser of the facility's usual charge for those services, or the usual charge multiplied by the percentage which the total allowable cost as reported by the facility in the facility's preceding fiscal year under title XVIII of the Social Security Act (42 U.S.C. 1395, *et seq.*) and the implementing regulations (42 CFR part 413) bears to the facility's total patient revenues for the year.

(c) *Applicant* means a person who requests uncompensated services or on whose behalf uncompensated services are requested.

(d) *CPI* means the National Consumer Price Index for medical care.

(e) *Facility* means an entity that received assistance under title VI or XVI of the Act and provided an assurance that it would provide a reasonable volume of services to persons unable to pay for the services.

(f) *Federal assistance* means assistance received by the facility under title VI or title XVI of the Act and any assistance supplementary to that title VI or title XVI assistance received by the facility under any of the following acts: the District of Columbia Medical Facilities Construction Act of 1968, 82 Stat. 631 (Pub. L. 90–457); the Public Works Acceleration Act of 1962 (42 U.S.C. 2641, *et seq.*); the Public Works

and Economic Development Act of 1965 (42 U.S.C. 3121, *et seq.*); the Appalachian Regional Development Act of 1965, as amended (40 U.S.C. App.); the Local Public Works Capital Development and Investment Act of 1976 (Pub. L. 94–369). In the case of a loan guaranteed by the Secretary with an interest subsidy, the amount of Federal assistance under title VI or title XVI for a fiscal year is the total amount of the interest subsidy that the Secretary will have paid by the close of that fiscal year, as well as any other payments which the Secretary has made as of the beginning of the fiscal year on behalf of the facility in connection with the loan guarantee or the direct loan which has been sold.

(g) *Fiscal year* means the facility's fiscal year.

(h) *Nursing home* means a facility which received Federal assistance for and operates as a *facility for long-term care* as defined at, as applicable, section 645(h) or section 1624(6) of the Act.

(i) *Operating costs* for any fiscal year means the total operating expenses of a facility as set forth in an audited financial statement, minus the amount of reimbursement, if any, received (or if not received, claimed) in that year under titles XVIII and XIX of the Social Security Act.

(j) *Persons unable to pay* means persons who meet the eligibility criteria set out in § 124.505.

(k) *Request for uncompensated services* means any indication by or on behalf of an individual seeking services of the facility of the individual's inability to pay for services. A request for uncompensated services may be made at any time, including following institution of a collection action against the individual.

(l) *Secretary* means the Secretary of Health and Human Services or [his or her] delegatee.

(m) *Uncompensated services* means:

(1) For facilities other than those certified under § 124.513, § 124.514, § 124.515, or § 124.516, health services that are made available to persons unable to pay for them without charge or at a charge which is less than the allowable credit for those services. The amount of uncompensated services provided in a fiscal year is the total allowable credit for services less the amount charged for the services following an eligibility determination. Excluded are services provided more than 96 hours following notification to the facility by a quality improvement organization that it disapproved the services under section 1155(a)(1) or section 1154(a)(1) of the Social Security Act.

(2) For facilities certified under § 124.513, § 124.514, § 124.515, or § 124.516, services as defined in paragraph (m)(1) of this section and services that are made available to persons unable to pay for them under programs described by the documentation provided under § 124.513(c)(2), § 124.514(c)(2), or § 124.516(c)(2), as applicable, or pursuant to the terms of the applicable grant or agreement as provided in § 124.515. Except as provided in § 124.516, excluded are services reimbursed by Medicare, Medicaid, or other third party programs, including services for which reimbursement was provided as payment in full, and services provided more than 96 hours following notification to the facility by a quality improvement organization that it disapproved the services under section 1155(a)(1) or section 1154(a)(1) of the Social Security Act.

[52 FR 46031, Dec. 3, 1987, as amended at 59 FR 44639, Aug. 30, 1994]

§ 124.503 Compliance level.

(a) *Annual compliance level*. Subject to the provisions of this subpart, a facility is in compliance with its assurance to provide a reasonable volume of services to persons unable to pay if it provides for the fiscal year uncompensated services at a level not less than the lesser of—

(1) Three percent of its operating costs for the most recent fiscal year for which an audited financial statement is available;

(2) Ten percent of all Federal assistance provided to or on behalf of the facility, adjusted by a percentage equal to the percentage change in the CPI between the year in which the facility received assistance or 1979, whichever is later, and the most recent year for which a published index is available.

(b) *Deficits*. If in any fiscal year a facility fails to meet its annual compliance level, it shall provide uncompensated services in an amount sufficient to make up that deficit in subsequent

years, and its period of obligation shall be extended until the deficit is made up.

(1) *Types of deficits.* For purposes of determining the timing and amount of any deficit make-up, there are two types of deficits:

(i) *Justifiable deficits.* A justifiable deficit is one in which the facility did not meet its annual compliance level due to either financial inability (as determined under §124.511(c)) or, although otherwise in compliance with this subpart, a lack of eligible applicants for uncompensated services during the fiscal year.

(ii) *Noncompliance deficits.* A noncompliance deficit is one in which the facility failed to meet its annual compliance level due to noncompliance with this subpart.

(2) *Timing of deficit make-up*—(i) *Justifiable deficits.* (A) A facility assisted under title VI of the Act may make up a justifiable deficit at any time during its period of obligation or in the year (or years, if necessary) immediately following its period of obligation.

(B) A facility assisted under title XVI of the Act is not required to make up a justifiable deficit.

(ii) *Noncompliance deficits.* (A) A facility must begin to make up a noncompliance deficit in the fiscal year following the finding of noncompliance by the Secretary.

(B) A facility which claimed financial inability under §124.509(a)(2)(iii) and is found by the Secretary, pursuant to §124.511(c), to have been financially able to provide uncompensated services in the year in which the deficit was incurred shall begin to make up the deficit beginning in the fiscal year following the Secretary's finding.

(C) A facility required to make up a noncompliance deficit but which is determined by the Secretary, pursuant to §124.511(c), to be financially unable to do so in the year following the Secretary's finding of noncompliance shall make up the deficit in accordance with a schedule set by the Secretary.

(3) *Deficit make-up amount.* (i) The amount of a deficit in any fiscal year is the difference between the facility's annual compliance level for that year and the amount of uncompensated services provided in that year.

(ii) The amount of a justifiable deficit must be adjusted by a percentage equal to the percentage change in the CPI between the CPI available in the fiscal year in which the deficit was incurred and the CPI available in the fiscal year in which it was made up.

(iii) An amount equal to the result of dividing the amount of any noncompliance deficit for a fiscal year by the number of years of obligation remaining and adjusting it by a percentage equal to the percentage change in the CPI between the CPI available in the fiscal year in which the deficit was incurred and the CPI available in the fiscal year in which it was made up shall be added to a facility's annual compliance level for each fiscal year following the fiscal year of the finding of noncompliance.

(4) *Affirmative action plan for precluding future deficits.* Except where a facility reports to the Secretary in accordance with §124.509(a)(2)(iii) that it was financially unable to provide uncompensated services at the annual compliance level, a facility that fails to meet its annual compliance level in any fiscal year shall, in the following year, develop and implement a plan of action that can reasonably be expected to enable the facility to meet its annual compliance level. Such actions may include special notice to the community through newspaper, radio, and television, or expansion of service to Category B, or, with respect to nursing homes, Category C, persons. The Secretary may require changes to the plan. Where a facility fails to comply with this section, the Secretary may require it to make up the deficit in the fiscal year following the year in which it was required to institute the plan.

(c) *Excesses.* (1) Except for facilities certified under §124.513, §124.514, §124.515, §124.516, or §124.517, if a facility provides in a fiscal year uncompensated services in an amount exceeding its annual compliance level, it may apply the amount of excess to reduce its annual compliance level in any subsequent fiscal year. The facility may use any excess amount to reduce its annual compliance level only if the services in excess of the annual compliance level are provided in accordance with the requirements of this subpart.

(2) *Calculation and adjustment of excess.* (i) The amount of an excess in uncompensated services in any fiscal year is the difference between the amount of uncompensated services the facility provided in that year and the facility's annual compliance level for that year.

(ii) The amount of any excess compliance applied to reduce a facility's annual compliance level must be adjusted by a percentage equal to the percentage change in the CPI between the CPI available in the fiscal year in which the facility provided the excess, and the CPI available in the fiscal year in which the facility applies the excess to reduce its annual compliance level or satisfy its remaining obligation.

(3) Except as provided in subparagraph (1) of this paragraph, a facility assisted under title VI may in any fiscal year apply the amount of excess credited under this paragraph to satisfy the remainder of its obligation to provide uncompensated services. A facility's remaining obligation is determined as follows:

(i) Where the annual compliance level in such fiscal year is established under paragraph (a)(2) of this section, the remaining obligation is:

(A) For grant assistance, 10 percent of each grant under obligation, multiplied by the number of years remaining in its period of obligation, adjusted as provided for in paragraph (a)(2) of this section, plus any deficits required to be made up and less any unused excesses accrued in prior years; and

(B) For loan assistance, the facility's annual compliance level multiplied by the number of years remaining in the scheduled life of the loan, plus the sum of 10 percent of each yearly cumulative total of additional interest subsidy or other payments (which the Secretary will have made in connection with the guaranteed loan or a direct loan which has been sold) in each subsequent year remaining in the scheduled life of the loan, plus any deficits required to be made up, and less any unused excesses accrued in prior years; or

(ii) Where the annual compliance level in such fiscal year is established under paragraph (a)(1) of this section, the remaining obligation is the average of the facility's annual compliance levels in the previous three years, multiplied by the number of years remaining in its period of obligation, plus any deficits required to be made up under this section, and less any unused excesses accrued in prior years.

[52 FR 46031, Dec. 3, 1987; 52 FR 48362, Dec. 21, 1987, as amended at 60 FR 16756, Mar. 31, 1995; 66 FR 49266, Sept. 26, 2001]

§ 124.504 Notice of availability of uncompensated services.

(a) *Published notice.* A facility shall publish in a newspaper of general circulation in its area notice of its uncompensated services obligation before the beginning of its fiscal year. The notice shall include:

(1) The plan of allocation the facility proposes to adopt;

(2) The amount of uncompensated services the facility intends to make available in the fiscal year or a statement that the facility will provide uncompensated services to all persons unable to pay who request uncompensated services;

(3) An explanation, if the amount of uncompensated services the facility intends to make available in a fiscal year is less than the annual compliance level. If a facility has satisfied its remaining uncompensated services obligation since the last published notice under this paragraph, or will satisfy the remaining obligation during the fiscal year, the explanation must include this information; and

(4) A statement inviting interested parties to comment on the allocation plan.

(b) *Posted notice.* (1) The facility shall post notices, which the Secretary supplies in English and Spanish, in appropriate areas in the facility, including but not limited to the admissions areas, the business office, and the emergency room.

(2) If in the service area of the facility the ''usual language of households'' of ten percent or more of the population according to the most recent figures published by the Bureau of the Census is other than English or Spanish, the facility shall translate the notice into that language and post the translated notice on signs substantially similar in size and legibility to and posted with those supplied under paragraph (b)(1) of this section.

(3) The facility shall make reasonable efforts to communicate the contents of the posted notice to persons who it has reason to believe cannot read the notice.

(c) *Individual written notice.* (1) In any period during a fiscal year in which uncompensated services are available in the facility, the facility shall provide individual written notice of the availability of uncompensated services to each person who seeks services in the facility on behalf of himself or another. The individual written notice must:

(i) State that the facility is required by law to provide a reasonable amount of care without or below charge to people who cannot afford care;

(ii) Set forth the criteria the facility uses for determining eligibility for uncompensated services (in accordance with the financial eligibility criteria and the allocation plan);

(iii) State the location in the facility where anyone seeking uncompensated services may request them; and

(iv) State that the facility will make a written determination of whether the person will receive uncompensated services, and the date by or period within which the determination will be made.

(2) The facility shall provide the individual written notice before providing services, except where the emergency nature of the services provided makes prior notice impractical. If this exception applies, the facility shall provide the individual written notice to the next of kin or to the patient as soon as practical, but not later than when first presenting a bill for services.

(3) The facility shall make reasonable efforts to communicate the contents of the individual written notice to persons who it has reason to believe cannot read the notice.

§ 124.505 Eligibility criteria.

(a) A person unable to pay for health services is a person who—

(1) Is not covered, or receives services not covered, under a third-party insurer or governmental program, except where the person is not covered because the facility fails to participate in a program in which it is required to participate by § 124.603(c);

(2) Falls into one of the following categories:

(i) *Category A*—A person whose annual individual or family income, as applicable, is not greater than the current poverty line issued by the Secretary pursuant to 42 U.S.C. 9902 that applies to the individual or family. The facility shall provide uncompensated services to persons in Category A without charge.

(ii) *Category B*—A person whose annual individual or family income, as applicable, is greater than but not more than twice the poverty line issued by the Secretary pursuant to 42 U.S.C. 9902 that applies to the individual or family. If persons in Category B are included in the allocation plan, the facility shall provide uncompensated services to these persons without charge, or in accordance with a schedule of charges as specified in the allocation plan.

(iii) *Category C*—With respect only to persons seeking or receiving nursing home services, a person whose annual or family income, as applicable, is more than twice but not greater than three times the poverty line issued by the Secretary pursuant to 42 U.S.C. 9902 that applies to the individual or family. If persons in Category C are included in the allocation plan, the facility shall provide uncompensated services to these persons without charge, or in accordance with a schedule of charges as specified in the allocation plan; and

(3) Requests services within the facility's allocation plan in effect at the time of the request.

(b) For purposes of determining eligibility for uncompensated services, revisions of the poverty line are effective 60 days from the date of their publication in the FEDERAL REGISTER.

(c) A person is eligible for uncompensated services if the person's individual or family annual income, as applicable, is at or below the level established under paragraph (a)(2) of this section, when calculated by either of the following methods:

(1) Multiplying by four the person's or family's income, as applicable, for the three months preceding the request for uncompensated services;

(2) Using the person's or family's income, as applicable, for the twelve months preceding the request for uncompensated services.

[52 FR 46031, Dec. 3, 1987, as amended at 60 FR 16756, Mar. 31, 1995]

§ 124.506 Allocation of services; plan requirement.

(a)(1) A facility shall provide its uncompensated services in accordance with a plan that sets out the method by which the facility will distribute its uncompensated services among persons unable to pay. The plan must:

(i) State the type of services that will be made available;

(ii) Specify the method, if any, for distributing those services in different periods of the year;

(iii) State whether Category B or, in the case of nursing homes only, Category C persons will be provided uncompensated services, and if so, whether the services will be available without charge or at a reduced charge;

(iv) If services will be made available to Category B persons at a reduced charge, specify the method used for reducing charges, and provide that the method is applicable to all persons in Category B;

(v) With respect to nursing homes only, if services will be made available to Category C persons at a reduced charge, specify the method used for reducing charges, provided that such method may not result in greater reductions than those afforded to Category B persons, and provide that this method is applicable to all persons in Category C; and

(vi) Provide that the facility provides uncompensated services to all persons eligible under the plan who request uncompensated services.

(2) A facility must adopt an allocation plan that meets the requirements of paragraph (a) by publishing the plan in a newspaper of general circulation in its area. The plan may take effect no earlier than 60 days following the date of publication.

(b)(1) If in any fiscal year a facility fails to adopt and publish a plan in accordance with paragraph (a) of this section, it shall provide uncompensated services in accordance with the last plan it published in a newspaper of general circulation in its area.

(2) If no plan was previously published in accordance with paragraph (a)(2) of this section, the facility must provide uncompensated services without charge to all applicants in Category A and Category B, and, with respect to nursing homes, Category C, who request service in the facility. This requirement applies until the facility ceases to provide uncompensated services under § 124.508 or until an allocation plan published in accordance with paragraph (a)(2) of this section becomes effective.

(c) A facility may revise its allocation plan during the fiscal year by publishing the revised plan in a newspaper of general circulation in the area it serves. A revised plan may take effect no earlier than 60 days following the date of publication.

[52 FR 46031, Dec. 3, 1987, as amended at 60 FR 16756, Mar. 31, 1995]

§ 124.507 Written determinations of eligibility.

(a) Determinations of eligibility must be in writing, be made in accordance with this section, and a copy of the determination must be provided to the applicant promptly.

(b) *Content of determinations*—(1) *Favorable determinations.* A determination that an applicant is eligible must indicate:

(i) That the facility will provide uncompensated services at no charge or at a specified charge less than the allowable credit for the services;

(ii) The date on which services were requested;

(iii) The date on which the determination was made;

(iv) The applicant's individual or family income, as applicable, and family size; and

(v) The date on which services were or will be first provided to the applicant.

(2) *Conditional determinations.* (i) As a condition to providing uncompensated services, a facility may:

(A) Require the applicant to furnish any information that is reasonably necessary to substantiate eligibility; and

(B) Require the applicant to apply for any benefits under third party insurer or governmental programs to which he/she is or could be entitled upon proper application.

(ii) A conditional determination must:

(A) Comply with paragraph (b)(1) of this section; and

(B) State the condition(s) under which the applicant will be found eligible.

(iii) When a facility determines that the condition(s) upon which a conditional determination was made has been met, or will not be met, it shall make a favorable determination or denial on the request, as appropriate, in accordance with this section.

(3) *Denials.* A facility must provide to each applicant denied the uncompensated services requested, in whole or in part, a dated statement of the reasons for the denial.

(c) *Timing of determinations*—(1) *Preservice determinations.* (i) Facilities other than nursing homes shall make a determination of eligibility within two working days following a request for uncompensated services which is made before receipt of outpatient services or before discharge for inpatient services;

(ii) Nursing homes shall make a determination of eligibility within ten working days, but no later than two working days following the date of admission, following a request for uncompensated services made prior to admission.

(2) *Postservice determinations.* All facilities shall make a determination of eligibility not later than the end of the first full billing cycle following a request for uncompensated services which is made after receipt of outpatient services, discharge for inpatient services, or admission for nursing home services.

[52 FR 46031, Dec. 3, 1987; 52 FR 48362, Dec. 21, 1987]

§ 124.508 Cessation of uncompensated services.

(a) *Facilities not certified under § 124.513, § 124.514, § 124.515, § 124.516, or § 124.517.* Where a facility, other than a facility certified under § 124.513, § 124.514, § 124.515, § 124.516, or § 124.517, has maintained the records required by § 124.510(a) and determines based thereon that it has met its annual compliance level for the fiscal year or the appropriate level for the period specified in its allocation plan, it may, for the remainder of that year or period:

(1) Cease providing uncompensated services;

(2) Cease providing individual notices in accordance with § 124.504(c);

(3) Remove the posted notices required by § 124.504(b); and

(4) Post an additional notice stating that it has satisfied its obligation for the fiscal year or appropriate period and when additional uncompensated services will be available.

(b) *Facilities certified under § 124.514.* Where a facility certified under § 124.514 has maintained the records required by § 124.510(c) and determines based thereon that it has met its compliance level, under § 124.514(d), for the fiscal year, it may, for the remainder of the fiscal year:

(1) Cease providing uncompensated services; and

(2) Discontinue providing notice pursuant to § 124.514(b)(2).

[52 FR 46031, Dec. 3, 1987, as amended at 59 FR 44639, Aug. 30, 1994; 66 FR 49266, Sept. 26, 2001]

§ 124.509 Reporting requirements.

(a) *Facilities not certified under § 124.513, § 124.514, § 124.515, § 124.516, or § 124.517*—(1) *Timing of reports.* (i) A facility shall submit to the Secretary a report to assist the Secretary in determining compliance with this subpart once every three fiscal years, on a schedule to be prescribed by the Secretary.

(ii) A facility shall submit the required report more frequently than once every three years under the following circumstances:

(A) If the facility determines that in the preceding fiscal year it did not provide uncompensated services at the annual compliance level, it shall submit a report.

(B) If the Secretary determines, and notifies the facility in writing that a report is needed for proper administration of the program, the facility shall submit a report within 90 days after receiving notice from the Secretary, or

within 90 days after the close of the fiscal year, whichever is later.

(iii) Except as specified in paragraph (a)(1)(ii)(B) of this section, the reports required by this section shall be submitted within 90 days after the close of the fiscal year, unless a longer period is approved by the Secretary for good cause.

(2) *Content of report.* The report must include the following information in a form prescribed by the Secretary:

(i) Information that the Secretary prescribes to permit a determination of whether a facility has met the annual compliance level for the fiscal years covered by the report;

(ii) The date on which the notice required by § 124.504(a) was published, and the name of the newspaper that printed the notice;

(iii) If the amount of uncompensated services provided by the facility in the preceding fiscal year was lower than the annual compliance level, an explanation of why the facility did not meet the required level. If the facility claims that it failed to meet the required compliance level because it was financially unable to do so, it shall explain and provide documentation prescribed by the Secretary;

(iv) If the facility is required to submit an affirmative action plan, a copy of the plan.

(v) Other information that the Secretary prescribes.

(3) *Institution of suit.* Not later than 10 days after being served with a summons or complaint the facility shall notify the HHS Regional Health Administrator[1] for the Region in which it is located of any legal action brought against it alleging that it has failed to comply with the requirements of this subpart.

(b) *Facilities certified under § 124.513 or § 124.516.* A facility certified under § 124.513 or § 124.516 shall comply with paragraph (a)(3) of this section and shall submit within 90 days after the close of its fiscal year, as appropriate:

(1) A certification, signed by the responsible official of the facility, that there has been no material change in the factors upon which the certification was based; or

(2) A certification, signed by the responsible official of the facility and supported by appropriate documentation, that there has been a material change in the factors upon which the certification was based.

(c) *Facilities certified under § 124.514.* A facility certified under § 124.514 shall comply with paragraph (a)(3) of this section and shall submit within 90 days after the close of its fiscal year, as appropriate:

(1)(i) A certification, signed by the responsible official of the facility, that there has been no material change in the factors upon which the certification was based; or

(ii) A certification, signed by the responsible official of the facility and supported by appropriate documentation, that there has been a material change in the factors upon which the certification was based; and

(2) A certification, signed by the responsible official of the facility, of the amount of uncompensated services provided in the previous fiscal year.

(d) *Facilities certified under § 124.515.* A facility certified under § 124.515 shall submit such reports as are required by the terms of its grant under section 329 or 330 or by its agreement under section 334 of the Act, as applicable, at such intervals as the Secretary may require.

(e) *Facilities certified under § 124.517.* If a facility certified under § 124.517 ceases to provide uncompensated services consistent with its certification under that section because of financial inability, it shall report such cessation to the Secretary within 90 days of the cessation and provide any documentation or information relating to the provision or cessation of uncompensated services that the Secretary may require.

(Approved by the Office of Management and Budget under control number 0915–0077)

[52 FR 46031, Dec. 3, 1987, as amended at 52 FR 48362, Dec. 21, 1987; 54 FR 52939, Dec. 26, 1989; 59 FR 44639, Aug. 30, 1994; 66 FR 49266, Sept. 26, 2001]

[1] The addresses of the HHS Regional Offices are set out in 45 CFR 5.31.

§ 124.510 Record maintenance requirements.

(a) *Facilities not certified under § 124.513, § 124.514, § 124.515, § 124.516, or § 124.517.* (1) A facility shall maintain, make available for public inspection consistent with personal privacy, and provide to the Secretary on request, any records necessary to document its compliance with the requirements of this subpart in any fiscal year, including:

(i) Any documents from which the information required to be reported under § 124.509(a) was obtained;

(ii) Accounts which clearly segregate uncompensated services from other accounts; and

(iii) Copies of written determinations of eligibility under § 124.507.

(2) A facility shall retain the records maintained pursuant to paragraph (a)(1) for three years after submission of the report required by § 124.509(a)(1), except where a longer period is required by the Secretary, or until 180 days following the close of the Secretary's assessment investigation under § 124.511(b), whichever is less.

(3) A facility shall, within 60 days of the end of each fiscal year, determine the amount of uncompensated services it provided in that fiscal year. Documents that support the facility's determination shall be made available to the public on request. If a report is or will be filed under § 124.509(a)(1), a facility may respond to a request by providing a copy of the report to the requester.

(b) *Facilities certified under § 124.513, § 124.514, § 124.516, or § 124.517.* A facility certified under § 124.513, § 124.514, § 124.516, or § 124.517 shall retain, make available for public inspection consistent with personal privacy, and provide to the Secretary on request any records necessary to document compliance with the applicable requirements of this subpart in any fiscal year, including those documents provided to the Secretary under § 124.513(c), § 124.514(c), § 124.516(c), or § 124.517(b), as applicable. A facility shall maintain these records for three years, except where a longer period is required as a result of an investigation by the Secretary. In such cases, records must be kept until 180 days following the close of the Secretary's assessment investigation under § 124.511(b).

(c) *Facilities certified under § 124.515.* A facility certified under § 124.515 shall maintain the records required by its grant under section 329 or section 330 or its agreement under section 334 of the Act, as applicable, for such period of time as the grant agreement may require.

(Information collection requirements in paragraphs (a) and (b) approved by the Office of Management and Budget under control number 0915–0103)

[52 FR 46031, Dec. 3, 1987; 52 FR 48362, Dec. 21, 1987; 59 FR 44639, Aug. 30, 1994; 66 FR 49266, Sept. 26, 2001]

§ 124.511 Investigation and determination of compliance.

(a) *Complaints.* A complaint that a facility is out of compliance with the requirements of this subpart may be filed with the Secretary by any person.

(1) A complaint is considered to be filed with the Secretary on the date the following information is received in the Office of the HHS Regional Health Administrator for the Region in which the facility is located:

(i) The name and address of the person making the complaint or on whose behalf the complaint is made;

(ii) The name and location of the facility;

(iii) The date or approximate date on which the event occurred; and

(iv) A statement of what actions the complainant considers to violate the requirements of this subpart.

(2) The Secretary promptly provides a copy of the complaint to the facility named in the complaint.

(3) When the Secretary investigates a facility, the facility, including a facility certified under § 124.513, § 124.514, § 124.515, § 124.516, or § 124.517, shall provide to the Secretary on request any documents, records and other information concerning its operation that relate to the requirements of this subpart. A facility will be presumed to be out of compliance with its assurance unless it supplies documentation sufficient to show compliance with the applicable provisions of this subpart.

(4) Section 1627 of the Act provides that if the Secretary dimisses a complaint or the Attorney General has not

brought an action for compliance within six months from the date on which the compliant is filed, the person filing it may bring a private action to effectuate compliance with the assurance. If the Secretary determines that he/she will be unable to issue a decision on a complaint or otherwise take appropriate action within the six month period, the Secretary may, based on priorities for the disposition of complaints that are established to promote the most effective use of enforcement resources, or on the request of the applicant, dismiss the complaint without a finding as to compliance prior to the end of the six month period, but no earlier than 45 days after the complaint is filed.

(b) *Assessments*. The Secretary periodically investigates and assesses facilities to ascertain compliance with the requirements of this subpart, including certification of the amount of uncompensated services provided in a fiscal year or years, and provides guidance and prescribes corrective action to correct noncompliance.

(1) *Compliance after February 1, 1988*. (i) The Secretary may certify that a facility has substantially complied with its assurance for a fiscal year or years, and such certification shall establish that the facility provided the amount of uncompensated services certified for the period covered by the certification.

(ii) A certification of substantial compliance shall be based on the amount properly claimed by the facility pursuant to §124.509(a), utilizing procedures determined by the Secretary to be sufficient to establish that the facility has substantially complied with its assurance for the period covered by the certification. The procedures will include examination of individual account data to the extent deemed necessary by the Secretary.

(iii) A certification of substantial compliance will be made where the Secretary determines that, for the period covered by the certification, the facility provided uncompensated services to eligible persons who had equal opportunity to apply therefor. In making this determination, the Secretary will consider, in descending order of importance, whether—

(A) Corrective action prescribed pursuant to §124.512(b) has been taken by the facility;

(B) Any noncompliance with the requirements of this subpart may be remedied by corrective action under §124.512(b);

(C) The facility had procedures in place that complied with the requirements of §124.504(c), §124.505, §124.507, §124.509, 125.510, §124.513(b)(2), §124.514(b)(2), §124.515, §124.516(b)(1) or (b)(2), as applicable, or §124.517(b), and systematically and correctly followed such procedures.

(2) *Compliance prior to February 1, 1988*. The Secretary will determine the amount of creditable services provided prior to the effective date of these rules using the compliance standards applicable under the rules as promulgated on May 18, 1979, based on procedures determined by the Secretary to be sufficient to establish that the facility provided such amounts of uncompensated services in the period(s) being assessed.

(c) *Determinations of financial inability*. In determining whether a facility was or is financially able to meet its annual compliance level, the Secretary will consider any comments submitted by interested parties. In making this determination, the Secretary will consider factors such as:

(1) The ratio of revenues to expenses;

(2) The occupancy rate;

(3) The ratio of current assets to current liabilities;

(4) The average cost per patient day;

(5) The number of days of operating expenses in accounts payable;

(6) The number of days of revenues in accounts receivable;

(7) The sinking fund (or depreciation fund) balance;

(8) The debt coverage ratio; and

(9) The availability of restricted or unrestricted funds (such as an endowment) available for charitable use.

[52 FR 46031, Dec. 3, 1987; 52 FR 48362, Dec. 21, 1987; 53 FR 5576, Feb. 25, 1988; 59 FR 44639, Aug. 30, 1994; 66 FR 49266, Sept. 26, 2001]

§ 124.512 Enforcement.

(a) If the Secretary finds, based on his/her investigation under §124.511, that a facility did not comply with the

requirements of this subpart, the Secretary may take any action authorized by law to secure compliance, including but not limited to, voluntary agreement or a request to the Attorney General to bring an action against the facility for specific performance.

(b) A facility, including a facility certified under § 124.513, § 124.514, § 124.516, or § 124.517, that has denied uncompensated services to any person because it failed to comply with the requirements of this subpart will not be in compliance with its assurance until it takes whatever steps are necessary to remedy fully the noncompliance, including:

(1) Provision of uncompensated services to applicants improperly denied;

(2) Repayment of amounts improperly collected from persons eligible to receive uncompensated services; and

(3) Other corrective actions prescribed by the Secretary.

(c) The Secretary may disallow all of the uncompensated services claimed in a fiscal year where the Secretary finds that the facility was in substantial noncompliance with its assurance because it failed to:

(1) Have a system for providing notice to eligible persons as required by § 124.504(c), § 124.513(b)(2), § 124.514(b)(2), § 124.516 (b)(2)(ii)(A), or § 124.517(b)(2), as applicable;

(2) Comply with the applicable reporting requirements of § 124.509;

(3) Have a system for maintaining records of uncompensated services provided in accordance with § 124.510; or

(4) Take corrective action prescribed pursuant to paragraph (b) of this section.

(d) In the absence of a finding of substantial compliance or substantial noncompliance in a fiscal year, the Secretary may disallow uncompensated services claimed by a facility in that fiscal year to the extent that the Secretary finds that such services are not documented as uncompensated services under § 124.510 or are subject to disallowance under § 124.513(d) or § 124.514(d), as applicable.

[52 FR 46031, Dec. 3, 1987, as amended at 59 FR 44639, Aug. 30, 1994; 66 FR 49266, Sept. 26, 2001]

§ 124.513 Public facility compliance alternative.

(a) *Effect of certification.* The Secretary may certify a facility which meets the requirements of paragraphs (b) and (c) of this section as a ''public facility''. A facility which is so certified is not required to comply with this subpart except as otherwise herein provided.

(b) *Criteria for qualification.* A public facility may qualify for certification under this section if all of the following criteria are met:

(1) It is a facility which is owned and operated by a unit of State or local government or a quasi-public corporation as defined at 42 CFR 124.2(m).

(2) It provides health services without charge or at a substantially reduced rate to persons who are determined by the facility to qualify therefor under a program of discounted health services. A ''program of discounted health services'' must provide for financial and other objective eligibility criteria and procedures, including notice prior to nonemergency service, that assure effective opportunity for all persons to apply for and obtain a determination of eligibility for such services, including a determination prior to service where requested; *provided that,* such criteria and procedures are not required where the facility makes all services available to all persons at no or nominal charge.

(3)(i) It received, for the three most recent fiscal years, at least 10 percent of its total operating revenue (net patient revenue plus other operating revenue, exclusive of any amounts received, or if not received, claimed, as reimbursement under titles XVIII and XIX of the Social Security Act) from State and local tax appropriations or other State and local government revenues, or from a quasi-public corporation as defined at 42 CFR 124.2(m), to cover operating deficits attributable to the provision of discounted services; or

(ii) If provided, in each of the three most recent fiscal years, uncompensated services under this subpart or under programs described by the documentation provided under § 124.513(c)(2) in an amount not less than twice the annual compliance level computed under § 124.503(a).

(c) *Procedures for certification*. To be certified under this section, a facility must submit to the Secretary, in addition to other materials that the Secretary may from time to time require, copies of the following:

(1) Audited financial statements or official State or local government documents (such as annual reports or budget documents), for the three most recent fiscal years, sufficient to show that the facility meets the criteria in paragraph (b)(3)(i) or (ii) of this section.

(2) A complete description of its program(s) of discounted health services, including charging and collection policies of the facility, and eligibility criteria and notice and determination procedures used under its program(s) of discounted services.

(d) *Period of effectiveness*. (1) A certification by the Secretary under this section remains in effect until withdrawn. The Secretary may disallow credit under this subpart when the Secretary determines that there has been a material change in any factor upon which certification was based or substantial noncompliance with this subpart. The Secretary may withdraw certification where the change or noncompliance has not been adequately remedied or otherwise continues.

(2) *Deficits*—(i) *Title VI-assisted facilities with assessed deficits*. Where a facility assisted under title VI of the Act has been assessed as having a deficit under §124.503(b) that has not been made up prior to certification under this section, the facility may make up that deficit by either—

(A) Demonstrating to the Secretary's satisfaction, that it met the requirements of paragraph (b) of this section for each year in which a deficit was assessed; or

(B) Providing an additional period of service under this section on the basis of one (or portion of a) year of certification for each year (or portion of a year) of deficit assessed. The period of obligation applicable to the facility under §124.501(b) shall be extended until the deficit is made up in accordance with the preceding sentence.

(ii) *Title VI-assisted facilities which have not been assessed*. Where any period of compliance under this subpart of a facility assisted under title VI of the Act has not been assessed, the facility will be presumed to have no allowable credit for such period. The facility may either—

(A) Make up such deficit in accordance with paragraph (d)(2)(i) of this section; or

(B) Submit an independent certified audit, conducted in accordance with procedures specified by the Secretary, of the facility's records maintained pursuant to §124.510. If the audit establishes to the Secretary's satisfaction that no, or a lesser, deficit exists for the period in question, the facility will receive credit for the period so justified. Any deficit which the Secretary determines still remains must be made up in accordance with paragraph (d)(2)(i) of this section.

(iii) *Title XVI-assisted facilities*. (A) A facility assisted under title XVI of the Act which has an assessed deficit which was not made up prior to certification under this section shall make up that deficit in accordance with paragraph (d)(2)(i)(A) of this section. If it cannot make the showing required by that paragraph, it shall make up the deficit when its certification under this section is withdrawn.

(B) A facility assisted under title XVI of the Act whose compliance with this subpart has not been completely assessed will be presumed to have no allowable credit for the unassessed period. The facility may make up the deficit by—

(*1*) Following the procedure of subparagraph (d)(2)(iii)(A) of this section; or

(*2*) Submitting an independent certified audit, conducted in accordance with procedures specified by the Secretary, of the facility's records maintained pursuant to §124.510. If the audit establishes to the Secretary's satisfaction that no, or a lesser, deficit exists for the period in question, the facility will receive credit for the period so justified. Any deficit which the Secretary determines still remains must be made up in accordance with paragraph (d)(2)(iii)(A) of this section.

(Approved by the Office of Management and Budget under control number 0915–0103)

[52 FR 46031, Dec. 3, 1987; 52 FR 48362, Dec. 21, 1987]

§ 124.514 Compliance alternative for facilities with small annual obligations.

(a) *Effect of certification.* The Secretary may certify a facility which meets the requirements of paragraphs (b) and (c) of this section as a ''facility with a small annual obligation.'' A facility which is so certified is not required to comply with this subpart except as otherwise herein provided.

(b) *Criteria for qualification.* A facility may qualify for certification under this section if all of the following criteria are met:

(1)(i) Title VI-assisted facilities. (A) For the facility's fiscal year in which this section becomes effective, the level, computed under § 124.503(c) (3), divided by the number of years remaining in its period of obligation (including an additional year or portion of a year for each year or portion of a year in which a deficit was incurred and has not been made up), is not more than $10,000;

(B) For a subsequent fiscal year, the level computed under paragraph (A) of this paragraph (b)(1)(i), is at or less than $10,000, adjusted by a percentage equal to the percentage change in the CPI available in the year in which this section becomes effective and the most recent year for which a published index is available.

(ii) *Title XVI-assisted facilities.* (A) For the facility's fiscal year in which this section becomes effective, the level under § 124.503(a), plus the amount of any noncompliance deficits which have not been made up, is at or less than $10,000.

(B) For a subsequent fiscal year, the level, computed under paragraph (A) of this paragraph (b)(1)(ii), is at or less than $10,000, adjusted as provided in paragraph (b)(1)(i)(B) of this section.

(2) It provides health services without charge or at a substantially reduced rate to persons who are determined by the facility to qualify threrefor under a program of discounted health services. A ''program of discounted health services'' must provide for financial and other objective eligibility criteria and procedures, including notice prior to nonemergency service, that assure effective opportunity for all persons to apply for and obtain a determination of eligibility for such services, including a determination prior to service where requested; *Provided that,* such criteria and procedures are not required where the facility makes all services available to all persons at no or nominal charge.

(c) *Procedures for certification.* To be certified under this section, a facility must submit to the Secretary, in addition to other materials that the Secretary may from time to time require, a complete description of its program(s) of discounted health services, including charging and collection policies of the facility, and eligibility criteria and notice and determination precedures used under its program(s) of discounted services.

(d) *Period of effectiveness.* A certification by the Secretary under this section remains in effect until withdrawn. During the period in which such certification is in effect, the facility must provide uncompensated services in an amount not less than the level applicable under paragraph (b)(1) of this section for each fiscal year. The Secretary may disallow credit under this subpart when the Secretary determines that there has been a material change in any factor upon which certification was based or substantial noncompliance with this subpart. The Secretary may withdraw certification where the change or noncompliance cannot be or has not been adequately remedied or noncompliance otherwise continues.

(e) *Deficits.* (1) Where the compliance level of a facility assisted under title VI of the Act is computed under paragraph (b)(1)(i)(A) of this section as including additional year(s) or a portion of a year, the facility's period of obligation under this subpart shall be extended by such additional period, until certification is withdrawn.

(2) Where a facility has been assessed as having a deficit under § 124.503(b) that has not been made up prior to withdrawal of certification under this section or fails to provide services as required by paragraph (d) of this section, the facility must make up the

deficit in accordance with § 124.503(b) following withdrawal of certification.

(Approved by the Office of Management and Budget under control number 0915–0077)

[52 FR 46031, Dec. 3, 1987, as amended at 52 FR 48362, Dec. 21, 1987; 54 FR 52939, Dec. 26, 1989]

§ 124.515 Compliance alternative for community health centers, migrant health centers and certain National Health Service Corps sites.

(a) *Period of effectiveness*. For each fiscal year for which a facility that receives a grant to operate a community health center under section 330 of the Act or a migrant health center under section 329 of the Act is in substantial compliance with the terms and conditions of such grant relating to the provision of services at a discount, the facility shall be certified as having met its annual compliance level in accordance with the requirements of this subpart and shall not be required otherwise to comply with the requirements of this subpart for that fiscal year. This provision also applies to any facility that has signed a memorandum of agreement with the Secretary under section 334 of the Act if the services provided by the National Health Service Corps professional(s) assigned pursuant to that agreement constitute all of the medical services provided by the facility.

(b) *Deficits*—(1) *Title VI-assisted facilities with assessed deficits*. Where a facility assisted under title VI of the Act has been assessed as having a deficit under § 124.503(b) that has not been made up prior to certification under this section, the facility may make up that deficit by either—

(i) Demonstrating to the Secretary's satisfaction that it met the requirements of paragraph (a) of this section for each year in which a deficit was assessed; or

(ii) Providing an additional period of service under this section on the basis of one (or portion of a) year of certification for each year (or portion of a year) of deficit assessed. The period of obligation applicable to the facility under § 124.501(b) shall be extended until the deficit is made up in accordance with the preceding sentence.

(2) *Title VI-assisted facilities which have not been assessed*. Where any period of compliance under this subpart of a facility assisted under title VI of the Act has not been assessed, the facility will be presumed to have no allowable credit for such period. The facility may either—

(i) Make up such deficit in accordance with paragraph (b)(1) of this section; or

(ii) Submit an independent certified audit, conducted in accordance with procedures specified by the Secretary, of the facility's records maintained pursuant to § 124.510. If the audit establishes to the Secretary's satisfaction that no, or a lesser, deficit exists for the period in question, the facility will receive credit for the period so justified. Any deficit which the Secretary determines still remains must be made up in accordance with paragraph (b)(1) of this section.

(3) *Title XVI-assisted facilities*. (i) A facility assisted under title XVI of the Act which has an assessed deficit which was not made up prior to certification under this section shall make up that deficit in accordance with paragraph (b)(1)(i) of this section. If it cannot make the showing required by that paragraph, it shall make up the deficit when it is no longer certified under this section.

(ii) A facility assisted under title XVI of the Act whose compliance with this subpart has not been completely assessed will be presumed to have no allowable credit for the unassessed period. The facility may make up the deficit by—

(A) Following the procedure of paragraph (b)(3)(i) of this section; or

(B) Submitting an independent certified audit, conducted in accordance with procedures specified by the Secretary, of the facility's records maintained pursuant to § 124.510. If the audit establishes to the Secretary's satisfaction that no, or a lesser, deficit exists for the period in question, the facility will receive credit for the period so justified. Any deficit which the Secretary determines still remains must be made

up in accordance with paragraph (b)(3)(i) of this section.

(Approved by the Office of Management and Budget under control number 0915–0077)

[52 FR 46031, Dec. 3, 1987, as amended at 52 FR 48362, Dec. 21, 1987; 54 FR 52939, Dec. 26, 1989]

§ 124.516 Charitable facility compliance alternative.

(a) *Effect of certification.* The Secretary may certify as a ''charitable facility'' a facility which meets the applicable requirements of this section. A facility which is certified or provisionally certified as a charitable facility is not required to comply with this subpart except as provided in this section.

(b) *Methods of qualification for certification or provisional certification.* (1) A facility may qualify for certification under this section if it meets the criteria of paragraph (c)(1) or paragraph (c)(2) of this section.

(2) A facility may qualify for a provisional certification under this section if it provides an assurance that meets the requirements of paragraph (d)(2) of this section.

(c) *Criteria for certification under paragraph (b)(1) of this section.* A facility may qualify for certification under paragraph (b)(1) of this section if it met the criteria of either paragraph (c)(1) or paragraph (c)(2) of this section for the fiscal year preceding the request for certification. A facility that seeks certification under paragraph (c)(2) of this section must also meet the requirements of paragraph (c)(2)(i) or paragraph (c)(2)(ii) of this section during each year of certification.

(1)(i) *For facilities that are nursing homes:* It received no monies directly from patients with incomes up to triple the current poverty line issued by the Secretary pursuant to 42 U.S.C. 9902, exclusive of amounts charged or received for purposes of claiming reimbursement under third party insurance or governmental programs, such as Medicaid or Medicare deductible or coinsurance amounts.

(ii) *For all other facilities.* It received no monies directly from patients with incomes up to double the current poverty line issued by the Secretary pursuant to 42 U.S.C. 9902, exclusive of amounts charged or received for purposes of claiming reimbursement under third party insurance or governmental programs, such as Medicaid or Medicare deductible or coinsurance amounts.

(2) It received at least 10 percent of its total operating revenue (net patient revenue plus other operating revenue, exclusive of any amounts received, or if not received, claimed, as reimbursement under Medicaid or Medicare) from philanthropic sources to cover operating deficits attributable to the provision of discounted services. Philanthropic sources include private trusts, foundations, churches, charitable organizations, state and/or local funding, and individual donors; and either—

(i) Provides health services without charge or at a substantially reduced rate (exclusive of amounts charged or received for purposes of claiming reimbursement under third party insurance or governmental programs, such as Medicaid or Medicare deductible or coinsurance amounts) to persons who are determined by the facility to qualify for such reduced charges under a program of discounted health services. A ''program of discounted health services'' must provide for financial and other objective eligibility criteria and procedures, including notice prior to nonemergency service, that assure effective opportunity for all persons to apply for and obtain a determination of eligibility for such services, including a determination prior to service where requested; or

(ii) Makes all services of the facility available to all persons at no more than a nominal charge, exclusive of amounts charged or received for purposes of claiming reimbursement under third party insurance or governmental programs, such as Medicaid or Medicare deductible or coinsurance amounts.

(d) *Procedures for certification*—(1) *Certification under paragraph (b)(1) of this section.* To be certified under paragraph (b)(1) of this section, a facility must submit to the Secretary, in addition to other materials that the Secretary may from time to time require, copies of the following:

(i) An audited financial statement for the fiscal year preceding the request or

other documents prescribed by the Secretary, sufficient to show that the facility meets the criteria of paragraph (c)(1) or (c)(2) of this section, as applicable;

(ii) Where a facility claims qualification under paragraph (c)(2)(i) of this section, a complete description, and documentation where requested, of its program of discounted health services, including charging and collection policies of the facility, and eligibility criteria and notice and determination procedures used under its program(s) of discounted health services;

(iii) Where the facility claims qualification under paragraph (c)(1) or paragraph (c)(2)(ii) of this section, a complete description, and documentation where requested, of its admission, charging, and collection policies.

(2) *Provisional certification under paragraph (b)(2) of this section.* (i) In order to receive a provisional certification under paragraph (b)(2) of this section, prior to the beginning of the fiscal year for which provisional certification will be sought, the facility must submit to the Secretary an assurance, together with such documentation and in such form and manner as the Secretary may require, that it will operate during the fiscal year a program that qualifies for certification under paragraph (b)(1) of this section.

(ii) No later than 90 days following the end of the fiscal year in which a facility has operated a provisionally certified program, the facility must submit to the Secretary, the documentation required, as applicable, under paragraph (d)(1) of this section.

(e) *Period of effectiveness*—(1) *Certification under paragraph (b)(1) of this section.* A certification by the Secretary under paragraph (b)(1) of this section remains in effect until withdrawn. The Secretary may disallow credit under this subpart when the Secretary determines that there has been a material change in any factor upon which certification was based or substantial noncompliance with this section. The Secretary may withdraw certification where the change or noncompliance has not been, in the Secretary's judgment, adequately remedied or otherwise continues.

(2) *Provisional certification under paragraph (b)(2) of this section.* Where the Secretary is satisfied, based on the documentation submitted by the facility in accordance with paragraph (d)(2)(ii) of this section and any other information available to the Secretary, that the facility has complied with the terms of its provisional certification under paragraph (b)(2) of this section, the Secretary shall certify the facility under paragraph (b)(1) of this section. If the Secretary finds that the facility has not complied with the terms of its provisional certification under paragraph (b)(2) of this section, the facility will receive no credit towards its uncompensated services obligation during the fiscal year of provisional certification.

(f) *Deficits*—(1) *Title VI-assisted facilities*—(i) *Title VI-assisted facilities with assessed deficits.* Where a facility assisted under title VI of the Act has been assessed as having a deficit under §124.503(b) that has not been made up prior to certification under paragraph (b)(1) of this section, the facility may make up that deficit by either—

(A) Demonstrating to the Secretary's satisfaction that it met the applicable requirements of paragraph (c) of this section for each year in which a deficit was assessed; or

(B) Providing an additional period of service under this section on the basis of one year (or portion of a year) of certification for each year (or portion of a year) of deficit assessed. The period of obligation applicable to the facility under §124.501(b) shall be extended until the deficit is made up in accordance with the preceding sentence.

(ii) *Title VI-assisted facilities with unassessed deficits.* Where any period of compliance under this subpart of a facility assisted under title VI of the Act has not been assessed, the facility will be presumed to have no allowable credit for the unassessed period. The facility may either—

(A) Make up such deficit in accordance with paragraph (f)(1)(i) of this section; or

(B) Submit an independent certified audit, conducted in accordance with procedures specified by the Secretary, of the facility's records maintained

pursuant to § 124.510. If the audit establishes to the Secretary's satisfaction that no, or a lesser, deficit exists for the period in question, the facility will receive credit for the period so justified. Any deficit which the Secretary determines still remains must be made up in accordance with paragraph (f)(1)(i)(B) of this section.

(2) *Title XVI-assisted facilities*—(i) *Title XVI-assisted facilities with assessed deficits.* A facility assisted under title XVI of the Act which has an assessed deficit which was not made up prior to certification under paragraph (b)(1) of this section shall make up that deficit in accordance with paragraph (f)(1)(i) of this section. If it cannot make the showing required by that paragraph, it shall make up the deficit when its certification under paragraph (b)(1) of this section is withdrawn.

(ii) *Title XVI-assisted facilities with unassessed deficits.* Where any period of compliance under this subpart of a facility assisted under title XVI of the Act has not been assessed, the facility will be presumed to have no allowable credit for the unassessed period. The facility may either—

(A) Make up such deficit in accordance with paragraph (f)(1)(i) of this section; or

(B) Submit an independent certified audit, conducted in accordance with procedures specified by the Secretary, of the facility's records maintained pursuant to § 124.510. If the audit establishes to the Secretary's satisfaction that no, or a lesser, deficit exists for the period in question, the facility will receive credit for the period so justified. Any deficit which the Secretary determines still remains must be made up in accordance with paragraph (f)(2)(i) of this section.

[66 FR 49267, Sept. 26, 2001]

§ 124.517 Unrestricted availability compliance alternative for Title VI-assisted facilities.

(a) *Effect of certification.* The Secretary may certify a Title VI-assisted facility which meets the requirements of paragraph (b) of this section and the applicable requirements of this subpart as an unrestricted availability facility. A facility which is so certified is not required to comply with the requirements of this subpart, except as provided in this section or elsewhere in this subpart.

(b) *Criteria for qualification.* A facility may qualify for certification under this section if, for any fiscal year for which certification is sought, it operates a compliant, fully expanded uncompensated services program. Such a program must meet the following criteria:

(1) It makes all services of the facility available without charge to all persons requesting uncompensated services from the facility who are eligible under § 124.505, including all persons coming within Category B and, if applicable, Category C.

(2) It complies with the notice and allocation plan requirements of §§ 124.504 and 124.506, except that all notices published or provided must describe an allocation plan and program consistent with paragraph (b)(1) of this section.

(3) It makes written determinations in accordance with § 124.507, except that all favorable determinations must indicate that the facility will provide uncompensated services at no charge.

(4) It provides uncompensated services consistent with the requirements of this section for the entire fiscal year for which certification is sought, except that a facility may

(i) Cease providing such services and still receive credit, calculated in accordance with paragraph (d) of this section, where—

(A) The facility has completed its total uncompensated services obligation, including making up any deficit; or

(B) The facility determines, and submits documentation which the Secretary finds, taking into account the factors identified in § 124.511(c), sufficient to establish that it is financially unable to continue to meet the requirements of this section for the remainder of the fiscal year; and

(ii) Receive a portion of a year's credit for the first partial year in which it began operating a fully expanded program, as long as it continued to operate the fully expanded program in subsequent years.

(c) *Period of effectiveness.* A certification by the Secretary under this section remains in effect until withdrawn.

The Secretary may withdraw certification under this section where the Secretary determines the facility is in substantial noncompliance with the requirements of paragraph (b) of this section and has not adequately remedied or otherwise continues such noncompliance. Where the Secretary withdraws certification for part or all of a fiscal year or years, no credit may be granted for the period of unremedied substantial noncompliance.

(d) *Deficits*. (1) Where a Title VI-assisted facility has been assessed as having a deficit under §124.503(b) that has not been made up prior to certification under this section, the facility may make up the deficit by providing uncompensated services in accordance with this section. The facility shall receive credit towards its deficit on the basis of one year, or part thereof, of credit towards each ''deficit year'' for each year, or part thereof, of operation in compliance with this section and the applicable requirements of this subpart.

(2) The number of ''deficit years'' of a facility shall be calculated as follows:

(i) Determine the number of years in the facility's total period of obligation pursuant to §124.501;

(ii) Subtract the number of years in which the facility operated in compliance with this section and the applicable requirements of this subpart from the number of years derived under paragraph (d)(2)(i) of this section;

(iii) For all years in which the facility did not operate in compliance with this section, determine the ratio of the total compliance levels applicable under §124.503(a) to the facility's total deficit under §124.503(b);

(iv) Multiply the percentage derived under paragraph (d)(2)(iii) of this section by the number of years under obligation pursuant to §124.501 but for which the facility did not operate in compliance with this section;

(v) Subtract the number derived under paragraph (d)(2)(iv) of this section from the number of years derived under paragraph (d)(2)(ii) of this section;

(vi) If the facility is still within the period described in §124.501(b)(1), add the number of years derived under paragraph (d)(2)(v) of this section to the end of the period of obligation, or if the facility is beyond the period described in §124.501(b)(1), add the number of years derived under paragraph (d)(2)(v) of this section to the last year the facility operated in compliance with this section.

[66 FR 49268, Sept. 26, 2001]

§124.518 Agreements with State agencies.

(a) Where the Secretary finds that it will promote the purposes of this subpart and the State agency is able and willing to do so, the Secretary may enter into an agreement with an agency of a State to assist in administering this subpart in the State. An agreement may be terminated by the Secretary or the State agency on 60 days notice.

(b) Under an agreement the State agency will provide any assistance the Secretary requests in any one or more of the following areas, as set out in the agreement:

(1) Investigation of complaints regarding noncompliance;

(2) Monitoring compliance of facilities with the requirements of this subpart;

(3) Review of reports submitted under §124.509, including affirmative action plans;

(4) Making initial decisions for the Secretary with respect to compliance, subject to appeal by any party to the Secretary, or review by the Secretary on the Secretary's initiative; and

(5) Application of any sanctions available to it under State law (such as license revocation or termination of State assistance) against facilities determined to be out of compliance with the requirements of this subpart.

(c) Nothing in this subpart precludes any State from taking any action authorized by State law regarding the provision of uncompensated services by facilities in the State as long as the action taken does not prevent the Secretary from enforcing the requirements of this subpart.

[52 FR 46031, Dec. 3, 1987. Redesignated at 59 FR 44639, Aug. 30, 1994]

Subpart G—Community Service

AUTHORITY: Secs. 215, 1525, 1602(6), Public Health Service Act as amended; 58 Stat 690, 88 Stat. 2249, 2259; 42 U.S.C. 216, 300m–4, 300o–1(6).

SOURCE: 44 FR 29379, May 18, 1979, unless otherwise noted.

§ 124.601 Applicability.

The provisions of this subpart apply to any recipient of Federal assistance under title VI or XVI of the Public Health Service Act that has given an assurance that it would make the facility or portion thereof assisted available to all persons residing (and, in the case of title XVI assisted applicants, employed), in the territorial area it serves. This assurance is referred to in this subpart as the ''community service assurance.''

§ 124.602 Definitions.

As used in this subpart:

Act means the Public Health Service Act, as amended.

Facility means the an entity that received assistance under title VI or title XVI of the Act and provided a community service assurance.

Fiscal year means facility's fiscal year.

Secretary means the Secretary of Health and Human Services or his delegatee.

Service area means the geographic area designated as the area served by the facility in the most recent State plan approved by the Secretary under title VI, except that, at the request of the facility, the Secretary may designate a different area proposed by the facility when he determines that a different area is appropriate based on the criteria in 42 CFR 53.1(d).

State agency means the agency of a state fully or conditionally designated by the Secretary as the State health planning and development agency of the State under section 1521 of the Act.

§ 124.603 Provision of services.

(a) *General.* (1) In order to comply with its community service assurance, a facility shall make the services provided in the facility or portion thereof constructed, modernized, or converted with Federal assistance under title VI or XVI of the Act available to all persons residing (and, in the case of facilities assisted under title XVI of the Act, employed) in the facility's service area without discrimination on the ground of race, color, national origin, creed, or any other ground unrelated to an individual's need for the service or the availability of the needed service in the facility. Subject to paragraph (b) (concerning emergency services) a facility may deny services to persons who are unable to pay for them unless those persons are required to be provided uncompensated services under the provisions of Subpart F.

(2) A person is residing in the facility's service area for purposes of this section if the person:

(i) Is living in the service area with the intention to remain there permanently or for an indefinite period;

(ii) Is living in the service area for purposes of employment; or

(iii) Is living with a family member who resides in the service area.

(b) *Emergency services.* (1) A facility may not deny emergency services to any person who resides (or, in the case of facilities assisted under title XVI of the Act, is employed) in the facility's service area on the ground that the person is unable to pay for those services.

(2) A facility may discharge a person that has received emergency services, or may transfer the person to another facility able to provide necessary services, when the appropriate medical personnel determine that discharge or transfer will not subject the person to a substantial risk of deterioration in medical condition.

(c) *Third party payor programs.* (1) The facility shall make arrangements, if eligible to do so, for reimbursement for services with:

(i) Those principal State and local governmental third-party payors that provide reimbursement for services that is not less than the actual costs, as determined in accordance with accepted cost accounting principles; and

(ii) Federal governmental third-party programs, such as medicare and medicaid.

(2) The facility shall take any necessary steps to insure that admission

to and services of the facility are available to beneficiaries of the governmental programs specified in paragraph (c)(1) of this section without discrimination or preference because they are beneficiaries of those programs.

(d) *Exclusionary admissions policies.* A facility is out of compliance with its community service assurance if it uses an admission policy that has the effect of excluding persons on a ground other than those permitted under paragraph (a) of this section. Illustrative applications of this requirement are described in the following paragraphs:

(1) A facility has a policy or practice of admitting only those patients who are referred by physicians with staff privileges at the facility. If this policy or practice has the effect of excluding persons who reside (or for title XVI facilities, are employed) in the community from the facility because they do not have a private family doctor with staff privileges at the facility, the facility would not be in compliance with its assurance. The facility is not required to abolish its staff physician admissions policy as a usual method for admission. However, to be in compliance with its community service assurance it must make alternative arrangements to assist area residents who would otherwise be unable to gain admission to obtain services available in the facility. Examples of alternative arrangements a facility might use include:

(i) Authorizing the individual's physician, if licensed and otherwise qualified, to treat the patient at the facility even though the physician does not have staff privileges at the facility;

(ii) For those patients who have no physician, obtaining the voluntary agreement of physicians with staff privileges at the facility to accept referrals of such patients, perhaps on a rotating basis;

(iii) If an insufficient number of physicians with staff privileges agree to participate in a referral arrangement, requiring acceptance of referrals as a condition to obtaining or renewing staff privileges;

(iv) Establishing a hospital-based primary care clinic through which patients needing hospitalization may be admitted; or

(v) Hiring or contracting with qualified physicians to treat patients who do not have private physicians.

(2) A facility, as required, is a qualified provider under the title XIX medicaid program, but few or none of the physicians with staff privileges at the facility or in a particular department or sub-department of the facility will treat medicaid patients. If the effect is that some medicaid patients are excluded from the facility or from any service provided in the facility, the facility is not in compliance with its community service assurance. To be in compliance a facility does not have to require all of its staff physicians to accept medicaid. However, it must take steps to ensure that medicaid beneficiaries have full access to all of its available services. Examples of steps that may be taken include:

(i) Obtaining the voluntary agreement of a reasonable number of physicians with staff privileges at the facility and in each department or sub-department to accept referral of medicaid patients, perhaps on a rotating basis;

(ii) If an insufficient number of physicians with staff privileges agree to participate in a referral arrangement, requiring acceptance of referrals as a condition to obtaining or renewing staff privileges;

(iii) Establishing a clinic through which medicaid beneficiaries needing hospitalization may be admitted; or

(iv) Hiring or contracting with physicians to treat medicaid patients.

(3) A facility requires advance deposits (pre-admission or pre-service deposits) before admitting or serving patients. If the effect of this practice is that some persons are denied admission or service or face substantial delays in gaining admission or service solely because they do not have the necessary cash on hand, this would constitute a violation of the community service assurance. While the facility is not required to forego the use of a deposit policy in all situations, it is required to make alternative arrangements to ensure that persons who probably can pay for the services are not denied them simply because they do not have the available cash at the time services are requested. For example, many employed persons and persons with other

collateral do not have savings, but can pay hospital bills on an installment basis, or can pay a small deposit. Such persons may not be excluded from admission or denied services because of their inability to pay a deposit.

§ 124.604 Posted notice.

(a) The facility shall post notices, which the Secretary supplies in English and Spanish, in appropriate areas of the facility, including but not limited to the admissions area, the business office and the emergency room.

(b) If in the service area of the facility the ''usual language of households'' of ten percent or more of the population, according to the most recent figures published by the Bureau of the Census, is other than English or Spanish, the facility shall translate the notice into that language and post the translated notice on signs substantially similar in size and legibility to, and posted with, those supplied under paragraph (a) of this section.

(c) The facility shall make reasonable efforts to communicate the contents of the posted notice to persons who it has reason to believe cannot read the notice.

§ 124.605 Reporting and record maintenance requirements.

(a) *Reporting requirements*—(1) *Timing of reports.*(i) A facility shall submit to the Secretary a report to assist the Secretary in determining compliance with this subpart once every three fiscal years, on a schedule to be prescribed by the Secretary. The report required by this section shall be submitted not later than 90 days after the end of the fiscal year, unless a longer period is approved by the Secretary for good cause shown.

(ii) A facility shall also submit the required report whenever the Secretary determines, and so notifies the facility in writing, that a report is needed for proper administration of the program. In this situation the facility shall submit the report specified in this section for the filing of reports, within 90 days after receiving notice from the Secretary, or within 90 days after the close of the fiscal year, whichever is later.

(2) *Content of report.* The report must be submitted on a form prescribed by the Secretary and must include information that the Secretary prescribes to permit a determination of whether a facility has met its obligations under this subpart.

(3) The facility shall provide a copy of any report to the HSA for the area when submitting it to the Secretary.

(4) *Institution of suit.* Not later than 10 days after being served with a summons or complaint, the applicant shall notify the Regional Health Administrator for the Region of HHS in which it is located of any legal action brought against it alleging that it has failed to comply with the requirements of this subpart.[1]

(b) *Record maintenance requirements.* (1) A facility shall maintain, make available for public inspection consistent with personal privacy, and provide to the Secretary on request, any records necessary to document its compliance requirements of this subpart in any fiscal year, including documents from which information required to be reported under paragraph (a) of this section was obtained. A facility shall maintain these records until 180 days following the close of the Secretary's investigation under § 124.606(a).

§ 124.606 Investigation and enforcement.

(a) *Investigations.* (1) The Secretary periodically investigates the compliance of facilities with the requirements of this subpart, and investigates complaints.

(2)(i) A complaint is filed with the Secretary on the date on which the following information is received in the Office of the Regional Health Administrator for the Region of HHS in which the facility is located:

(A) The name and address of the person making the complaint or on whose behalf the complaint is made;

(B) The name and location of the facility;

(C) The date or approximate date on which the event complained of occurred, and

[1] The addresses of the Regional Office of HHS are set out in 45 CFR 5.31.

(D) A statement of what actions the complainant considers to violate the requirements of this subpart.

(ii) The Secretary promptly provides a copy of the complaint to each facility named in the complaint.

(3) When the Secretary investigates a facility, the facility shall provide to the Secretary on request any documents, records and other information concerning its operations that relate to the requirements of this subpart.

(4) The Act provides that if the Secretary dismisses a complaint or the Attorney General has not brought an action for compliance within six months from the date on which the complaint is filed, the person filing it may bring a private action to effectuate compliance with the assurance. If the Secretary determines that he will be unable to issue a decision on a complaint or otherwise take appropriate action within the six month period, he may, based on priorities for the disposition of complaints that are established to promote the most effective use of enforcement resources, or on the request of the complainant, dismiss the complaint without a finding as to compliance prior to the end of the six month period, but no earlier than 45 days after the complaint is filed.

(b) *Enforcement*. (1) If the Secretary finds, based on his investigation under paragraph (a) of this section, that a facility did not comply with the requirements of this subpart, he may take any action authorized by law to secure compliance, including but not limited to voluntary agreement or a request to the Attorney General to bring an action against the facility for specific performance.

(2) If the Secretary finds, based on his investigation under paragraph (a) of this section, that a facility has limited the availability of its services in a manner proscribed by this subpart, he may, in addition to any other action that he is authorized to take in accordance with the Act, require the facility to establish an effective affirmative action plan that in his judgment is designed to insure that its services are made available in accordance with the requirements of this subpart.

§ 124.607 Agreements with State agencies.

(a) Where the Secretary finds that it will promote the purposes of this subpart, and the State agency is able and willing to do so, he may enter into an agreement with the State agency for the State agency to assist him in administering this subpart in the State.

(b) Under an agreement, the State agency will provide the Secretary with any assistance he requests in any one or more of the following areas, as set out in the agreement:

(1) Investigation of complaints of noncompliance;

(2) Monitoring the compliance of facilities with the requirements of this subpart;

(3) Review of affirmative action plans submitted under § 124.606(b);

(4) Review of reports submitted under § 124.605;

(5) Making initial decisions for the Secretary with respect to compliance, subject to appeal by any party to the Secretary or review by the Secretary on his own initiative; and

(6) Application of any sanctions available to it under State law (such as license revocation or termination of State assistance) against facilities determined to be out of compliance with the requirements of this subpart.

(c) A State agency may use funds received under section 1525 of the Act to pay for expenses incurred in the course of carrying out this agreement.

(d) Nothing in this subpart precludes any State from taking any action authorized by State law regarding the provision of services by any facility in the State as long as the action taken does not prevent the Secretary from enforcing the requirements of this subpart.

APPENDIX TO SUBPART G OF PART 124—INTERIM PROCEDURES AND CRITERIA FOR REVIEW BY HEALTH SYSTEMS AGENCIES OF APPLICATIONS UNDER SECTION 1625 OF THE PUBLIC HEALTH SERVICE ACT

In performing reviews under section 1513 (e) of the Public Health Service Act (42 U.S.C. 3001–2(c)) of applications for grants under section 1625 of the Act, health systems agencies shall use the procedures and criteria stated below. A health systems agency

may not conduct such reviews until the procedures and criteria to be used in conducting the reviews have been adopted by the agency and published in newspapers of general circulation within the health service area or other public information channels.

PROCEDURES

The procedures adopted and utilized by a health systems agency for conducting reviews of applications for grants under section 1625 of the Act shall include at least the following: 1. Except as provided below, notification of the beginning of a review within seven days of the receipt by the health systems agency of the application. Where the application was received by the health systems agency prior to publication of this subpart in the FEDERAL REGISTER, notification must be made within seven days of the date on which the health systems agency adopts its procedures and criteria. The notification shall include the proposed schedule for the review, the period within which a public hearing during the course of the review may be requested (which must be a reasonable period from the transmittal of the written notification required above), and the manner in which notification will be provided of the time and place of any hearings so requested. Written notification to members of the public may be provided through newspapers of general circulation in the area and public information channels. Notification to the applicant whose application is being reviewed and all other applicants for assistance under section 1625 of the Act providing health service in the health service area shall be by mail (which may be as part of a newsletter). The health systems agency must simultaneously notify the Federal funding agency of the beginning of the review.

2. Schedules for reviews which provide that such reviews shall not exceed 60 days from the date of notification made in accordance with paragraph 1 of this section to the date of the written findings made in accordance with paragraph 4 of this section. This does not preclude a health systems agency from conducting its review in less than 60 days.

3. Provision for applicants to submit to the health systems agency (in such form and manner as the agency shall require) such information as the agency deems necessary in order to conduct its review.

4. Written findings which state the basis for the approval or disapproval of the application by the health systems agency. Such findings shall be sent to the applicant, the State health planning and development agency (or agencies), and the Secretary, and shall be available to other upon request.

5. Access by the general public to all such applications reviewed by the health systems agency and to all other written materials pertinent to the agency review.

6. Public hearings in the course of agency review, if requested by one or more persons directly affected by the review. For purposes of this paragraph, a ''person directly affected by the review'' is as defined in 42 CFR 122.306 (a)(7).

CRITERIA

The specific criteria adopted and utilized by a health systems of this agency to conduct reviews of applications for grants under section 1625 of the Act shall include at least the following:

1. The relationship of the health services of the facility to the applicable health systems plan and annual implementation plan.

2. The relationship of the health services of the facility to the long-range development plan (if any) of the applicant.

3. The need that the population served or to be served by the facility has for the health services of such facility.

4. The availability of alternative, less costly, or more effective methods of providing the health services which the facility provides.

5. The relationship of the health services provided by the facility to the existing health care system of the area.

6. The availability of resources (including health manpower, management personnel, and funds for capital and operating needs) for the provision of services by the facility and the availability of alternative uses of such resources for the provision of other health services.

7. The special needs and circumstances of those entities which provide a substantial portion of their services or resources, or both, to individuals not residing in the health service area in which the entities are located or in adjacent health service areas. Such entities may include medical and other health professions schools, multidisciplinary clinics, and other speciality centers.

8. The special needs and circumstances of health maintenance organizations for which assistance may be provided under title XIII.

9. The costs and methods of the proposed construction or modernization, including the costs and methods of energy provision.

10. The probable impact of the project reviewed on the applicant's costs of providing health services.

Subpart H—Recovery of Grant Funds

AUTHORITY: Secs. 609 and 1622 of the Public Health Service Act as amended 98 Stat. 112 (42 U.S.C. 291i and 300s–1a).

SOURCE: 51 FR 7939, Mar. 7, 1986, unless otherwise noted.

§ 124.701 Applicability.

The provisions of this subpart apply to facilities with respect to which grant funds were paid for construction or modernization—

(a) Under title VI or XVI of the Public Health Service Act; or

(b) Pursuant to the authority of the Secretary under any of the following statutes:

(1) The Public Works Acceleration Act of 1962, Pub. L. 87–658 (42 U.S.C. 2641 *et seq.*);

(2) The District of Columbia Medical Facilities Construction Act of 1968, 82 Stat. 631 (Pub. L. 90–457);

(3) The Appalachian Regional Development Act of 1965, as amended (40 U.S.C. App.).

§ 124.702 Definitions.

As used in this subpart—

Act means the Public Health Service Act.

Department means the Department of Health and Human Services.

Expected useful life means the period of time during which the structure may reasonably be expected to perform the function for which it was designed or intended.

Facility means a facility with respect to which grant funds were paid under any of the authorizations listed in § 124.701.

Fiscal year means the facility's fiscal year.

Nonprofit, as applied to any facility, means a facility that is owned and operated by one or more nonprofit corporations or associations no part of the net earnings of which inures, or may lawfully inure, to the benefit of any private shareholder or individual.

Secretary means the Secretary of Health and Human Services and any other officer or employee of the Department of Health and Human Services to whom the authority involved has been delegated.

State agency means (1) in the case of a facility with respect to which a grant was made under title VI of the Public Health Service Act or any of the statutes listed in § 124.701(b), the State agency designated pursuant to section 604 of the Public Health Service Act or its successor agency, and (2) in the case of a facility with respect to which a grant was made under title XVI of the Public Health Service Act, the State health planning and development agency designated pursuant to title XV of the Public Health Service Act.

Then value means the value of the facility on the date the facility is sold, transferred or ceases to be used for a permissible use as described in § 124.704.

§ 124.703 Federal right of recovery.

(a) If any facility is at any time within 20 years after the completion of the grant-assisted construction or modernization sold or transferred to any entity which is either not qualified for a grant under the statute pursuant to which the grant was awarded or not approved as a transferee by the State agency, the United States shall be entitled to recover on the basis of joint and several liability from any transferor, transferee, or successive transferee of the facility an amount determined in accordance with this subpart.

(b) If any facility at any time within 20 years after the completion of the grant-assisted construction or modernization ceases to be a public or other non-profit facility that would have been eligible for a grant under the statute pursuant to which the grant was awarded, the United States shall be entitled to recover from the owners of the facility an amount determined in accordance with this subpart.

§ 124.704 Notification of sale, transfer, or change of use.

(a) The transferor of a facility that is sold or transferred as described in § 124.703(a), or the owner of a facility which ceases to be a public or other nonprofit facility as described in § 124.703(b), shall provide the Secretary written notice of such sale, transfer, or other change not later than 10 days after the date on which the sale, transfer, or change occurs.

(1) *Transfer*. For purposes of this subpart, a transfer occurs when a facility is conveyed to another entity through lease, merger, bankruptcy, foreclosure, or other arrangement.

(2) *Cease to be*. For purposes of this subpart,

(i) A facility ''ceases to be'' a facility for which a grant could have been made under the statute pursuant to which

the grant was awarded when it is no longer operated as such a facility; and

(ii) A facility ''ceases to be a public or nonprofit facility'' when an entity that is not a public or other non-profit corporation or association assumes management responsibilities with respect to the facility which, in the Secretary's judgment, are so pervasive as to constitute operation of the facility. The manager will not be deemed to be the operator of the facility if the management agreement contains both of the following provisions:

The Board of Directors of the facility retains authority to terminate the agreement at any time upon reasonable notice to the contractor.

No employee of the contractor may be a member of the facility's Board of Directors.

In the absence of either of these provisions the Secretary will consider the degree of control granted to the managing organization over patient admission, determination of what services will be provided, and charges for services provided in the facility.

(b) *Content of Notice.* The notice required by paragraph (a) of this section shall be sent to the Secretary by certified mail, and shall contain or be accompanied by

(1) The date of the sale, transfer, or other event that gives rise to the notice;

(2) Copies of any sales contracts, lease agreements, management contracts or other documents pertinent to the event giving rise to the notice;

(3) Estimates of current assets, current liabilities, book value of equipment, the expected value of land on the new owner's books, and the remaining depreciation for all fixed assets involved in the transaction calculated on a straight line basis using commonly adopted expected useful lifetimes.

(c) *Failure to provide notice.* Failure to provide the information required by paragraph (b) of this section, will be considered failure to provide the notice required by this section. In any case in which such information has not been provided, the Secretary will, promptly upon receiving an incomplete notice or otherwise discovering that a sale, transfer or other event giving rise to a recovery may have occurred, send a letter to the owner of the facility requesting the information needed to calculate a recovery amount.

(Approved by the Office of Management and Budget under control number 0915–0099)

§ 124.705 Amount of recovery.

(a) Except as provided in § 124.706, the amount that the United States shall be entitled to recover under this subpart is that amount bearing the same ratio to the then value of so much of the facility as constituted an approved project (or projects) as the amount of Federal participation bore to the cost of the construction or modernization under such project (or projects).

(b) The then value of the facility will be based on:

(1) The transaction value in the case of an arms-length sale or transfer, or

(2) A depreciated reproduction value in the absence of an arms-length sale or transfer or if the buyer fails to provide, within 60 days after the date of the Secretary's letter described in § 124.704(c), the information which, in the judgment of the Secretary, is necessary to establish, adjust, and apportion a transaction value. As used in this section, ''transaction value'' means in the case of a sale, the sale price, and in the case of a lease, the value of the lease plus the residual value of the facility at the termination of the lease (i.e., the reproduction value or, if appropriate, an alternative use value).

(c) The transaction value will be adjusted to account for the purchase or lease of other assets and the assumption of liabilities associated with the transaction. To determine the amount of Federal recovery, the adjusted value will be apportioned to the grant-aided assets by the ration of the remaining useful lifetime values of those assets to the sum of the remaining useful lifetime values of all assets not previously accounted for in adjusting the transaction value.

(d) A depreciated reproduction value will be established by calculating a reproduction value using construction cost indexes or current costs per square foot for construction, depending on which is more relevant to the type of construction associated with the grant. This reproduction value will then be adjusted by the ratio of the remaining

useful life to the total useful life for the assets involved.

(e) In calculating the recovery amount, the Secretary will include as Federal participation any grant assistance received by the facility under an authority listed in § 124.701 and any assistance supplementary to that assistance received for the construction or modernization of the facility under the Public Works and Economic Development Act of 1965 (42 U.S.C. 3121, *et seq.*) or the Local Public Works Capital Development Act of 1976 (Pub. L. 94–369).

§ 124.706 Calculation of interest.

(a) In addition to the amount of recovery calculated under § 124.705, the United States shall be entitled to recover interest on such amount in accordance with this section at the rate determined by the Secretary based on the average of the bond equivalent of the weekly ninety-day U.S. Treasury bill auction rate for the quarter previous to the quarter in which interest begins to accrue under this section.

(1) *Change of status before July 18, 1984.* For facilities that were sold or transferred or which ceased to be public or other nonprofit facilities before July 18, 1984, interest will be charged beginning August 17, 1984, or 180 days after the date of such sale, transfer or other, whichever is later, and ending on the date the amount the United States is entitled to recover is collected.

(2) *Change of status after July 17, 1984.* For facilities that are sold or transferred or which cease to be public or other nonprofit facilities after July 17, 1984, interest will be charged beginning 180 days after receipt by the Department of the notice required under § 124.704; *Provided*, That if such notice is not provided as prescribed, interest will be charged beginning on the date of the sale, transfer, or change of use, and ending on the date the amount which the United States is entitled to recover is collected.

(b) The Secretary may waive interest charges that result from delays caused solely by the Department.

§ 124.707 Waiver of recovery where facility is sold or transferred to a proprietary entity.

(a) *Conditions of the waiver.* The Secretary may waive the recovery rights of the United States arising under § 124.703(a) if the entity to which the facility was sold or transferred:

(1) Has filed a written request for the waiver within the time limits prescribed by this section;

(2) Has established an irrevocable trust in accordance with this section, in an amount equal to the greater of the amount that would otherwise have been recovered pursuant to § 124.705 (including accrued interest as calculated under § 124.706) or twice the cost of the remaining uncompensated services obligation of the facility as of the date of the change of status, that will be used by the entity only to provide services to those unable to pay in accordance with the requirements of subpart F of this part; and

(3) Has agreed to comply with the community service regulations set out in subpart G of this part.

(b) *Procedures for obtaining waiver.* (1) Within 30 days after the date of receipt of the information described in § 124.704(b), the Secretary will send a letter to the new owner of the facility advising of the United States' right of recovery and the opportunity to obtain a waiver. For the purpose of advising the new owner of the amount to be placed in the irrevocable trust should the owner wish to obtain a waiver, the letter will also state the dollar amount of the remaining uncompensated care obligation and the amount that would be due under § 124.705, computed as follows:

(i) *Computation of uncompensated care obligation.* (A) For a facility which changes status before the date that subpart F of this part is effective for the facility, the remaining uncompensated services obligation is zero.

(B) For a facility which changes status after the date that subpart F of this part is effective for the facility, the Secretary will multiply the annual compliance level, computed under the 10% method specified in 42 CFR 124.503(a)(1)(ii), for the fiscal year in which the change of status occurs times the number of years remaining

in the facility's uncompensated services obligation. From this amount, the Secretary will subtract amounts of excess or add amounts of deficit for each fiscal year prior to the change of status for which the Secretary has previously conducted an audit of uncompensated services accounts. Excess and deficits will be adjusted by the percent change in the National Consumer Price Index for Medical Care between the year in which the excess or deficit occurred and the year in which the status change occurred. For each fiscal year prior to the change of status which the Secretary has not audited, the Secretary will add to the remaining obligation an amount equal to the annual compliance level in each such year adjusted by the percent change in the National Consumer Price Index for Medical Care between that year and the year of the status change. The amount computed as the total remaining obligation will then be multiplied by two. If the transferee chooses to accept the Secretary's calculation, no further assessments will be made of uncompensated care provided prior to the change of status date. If the transferee does not accept the calculation, the transferor or transferee may hire, and may charge against the irrevocable trust established under this section, an independent auditor to certify the compliance level and any excess or deficit for the period from May 18, 1979, up to and including the date of the change of status, using standard Departmental procedures supplemented with instructions provided by the Secretary, and submit the results in accordance with paragraph (b)(2)(ii) of this section. The audit may be conducted for any years *not* included in a previous site assessment conducted by the Department. If the Secretary agrees that a change is appropriate, the Secretary will use this information to adjust the calculation as set out in paragraph (b)(3) of this section. If the independent auditor certifies that qualified care was rendered either at the facility or at a replacement facility operated by the transferee between the date of the change of status and the date of establishment of the trust, and the Secretary agrees, the post transfer level of care shall not affect the calculation of the total remaining uncompensated care obligation to be doubled, but instead shall be recognized as a credit to be drawn from the trust as provided in paragraph (c)(1)(ii) of this section. In the case of a facility with respect to which a grant was made under title XVI of the Act, the remaining period of obligation will be the remainder of the expected useful life of the facility, as follows: 40 years for buildings, 30 years for additions, 20 years for building renovations, 20 years for fixed equipment and 12 years for major movable equipment.

(ii) *Computation of recovery amount.* The Secretary will determine the recovery amount as provided in § 124.705.

(2) Within 60 days following the date of the Secretary's letter provided pursuant to paragraph (b)(1) of this section, the owner of the facility shall notify the Secretary in writing that it either:

(i) Accepts the trust fund amount for the waiver as offered by the Secretary;

(ii) Provides a detailed statement of an alternative determination of the recovery amount or an independent audit of the remaining uncompensated services obligation as described in paragraph (b)(1)(i) of this section; or

(iii) Does not seek a waiver under § 124.707. Failure to provide a timely response to the Secretary under this subparagraph will be considered an election not to seek the waiver.

(3) Within 30 days following the receipt of the owner's views concerning the calculation, and after considering those views, the Secretary will send a final letter providing the Secretary's determination of twice the remaining uncompensated care obligation and the recovery amount under § 124.705. The amount to be placed in the irrevocable trust will be the higher of those two figures. (See paragraph (a)(2) of this section.)

(4) Within 30 days of the date of the final letter, the owner of the facility shall notify the Secretary in writing whether or not it accepts the terms of the waiver. Failure to provide timely notice to the Secretary under this subparagraph will be considered an election not to accept the waiver.

(c) *Establishment of the trust.* (1) Within 60 days of the date of its acceptance of a waiver under paragraph (b)(2) or

(b)(4) of this section, the owner shall begin delivering services to those unable to pay in accordance with subpart F of this part under an irrevocable trust established in the amount calculated pursuant to paragraph (b) of this section. *Provided*, That

(i) The owner shall provide a copy of the trust documents to the Secretary and no trust shall be considered established until the trust documents have been approved by the Secretary; and

(ii) The owner may credit against the trust any uncompensated services provided in accordance with subpart F of this part between the date of the change of status of the facility and the establishment of the trust. For an owner to receive the credit before the establishment of the trust and deposit of funds therein, the auditor's report covering the post-transfer period shall be submitted with the notification of acceptance of the waiver, and in any event, not later than 30 days from the date of the Secretary's final letter described in paragraph (b)(3) of this section. Within 30 days following the receipt of the auditor's report, the Secretary will notify the owner of the allowable credit, if any. If the auditor's report is not timely submitted, the trust must be established and fully funded, in accordance with the time limits imposed by paragraph (c)(1) of this section, and the Secretary will notify the owner of the allowable credit, if any, within 30 days of the date of the establishment of the trust or within 30 days of the receipt of the report, whichever is later.

(2) The trust shall be administered by a Trustee who is neither an employee of the transferee nor an employee of a subsidiary or of the parent institution of the transferee.

(3) The trust shall provide that the trust corpus and income may be invested only in U.S. Government or U.S. Government insured securities.

(d) *Use of the trust*. The corpus and income of the irrevocable trust shall be used to pay for the costs of uncompensated services, which may include reasonable costs of establishing and administering the trust and the cost of the independent audit described in paragraph (b)(1)(i) of this section, until the trust is exhausted.

(Approved by the Office of Management and Budget under control number 0915–0099)

§ 124.708 Waiver of recovery—good cause for other use of facility.

The Secretary may for good cause waive the recovery rights of the United States arising under § 124.703(b). In determining whether there is good cause under this section for releasing the applicant or other owner of the facility from its obligation, the Secretary will take into consideration the extent to which:

(a) The facility will be devoted by the applicant or other owner to use for another public or nonprofit purpose whch will promote the purpose of the Act;

(b) There are reasonable assurances that for the remainder of the 20-year period other public or nonprofit facilities not previously utilized for the purpose for which the facility was constructed will be so utilized and are substantially equivalent in nature and purpose.

(c) The facility has been acquired from an agency of the United States (e.g., the Federal Housing Administration under its mortgage insurance commitment program) which has made a reasonable effort to dispose of it for operation as a public or nonprofit health care facility.

[51 FR 7939, Mar. 7, 1986, as amended at 57 FR 8272, Mar. 9, 1992]

§ 124.709 Withdrawal of waiver.

(a) Any waiver granted under this subpart is conditioned upon the recipient of the waiver carrying out the obligations imposed by § 124.707 or § 124.708 as applicable.

(b) The Secretary will monitor compliance with the community service and uncompensated care obligations of any entity that receives a waiver.

(c) Should a recipient of a waiver fail to comply with the applicable conditions, the Secretary will withdraw the waiver and seek recovery based on the value of the facility on the date the right of recovery first arose under § 124.703.

(d) No waiver will be withdrawn until the recipient has been notified in writing by the Secretary of the noncompliance and has failed to take corrective action within 90 days after the date of such notice.

(e) Should the waiver be withdrawn, the amount of the Government's recovery will be the amount set out in the Secretary's determination letter as described in § 124.707 (b)(1) or (b)(3) as applicable plus interest from the date of the notification sent in accordance with paragraph (d) of this section.

PARTS 125–129 [RESERVED]

SUBCHAPTER L—COMPASSIONATE PAYMENTS

PART 130—RICKY RAY HEMOPHILIA RELIEF FUND PROGRAM

Subpart A—General Provisions

Sec.
130.1 Purpose.
130.2 Definitions.
130.3 Amount of payments.

Subpart B—Criteria for Eligibility

130.10 Who is eligible for payment under the Act—living persons with HIV.
130.11 Who is eligible for payment under the Act—survivors of persons with HIV.

Subpart C—Documentation Required for Complete Petitions

130.20 Form of medical documentation.
130.21 What documentation is required for petitions filed by living persons with HIV?
130.22 What documentation is required for petitions filed by survivors of persons with HIV, which are filed in cases where the person with HIV dies before filing a petition?
130.23 What documentation is required for amendments to petitions, which are filed by survivors of persons with HIV?
130.24 What additional documentation may the Secretary require to resolve eligibility or payment issues?

Subpart D—Procedures for Filing and Paying Complete Petitions

130.30 Who may file a petition for payment or an amendment to a petition?
130.31 How and when is a petition for payment filed?
130.32 How and when will the Secretary determine the order of receipt of petitions?
130.33 How will the Secretary determine whether a petition is complete?
130.34 How will the Secretary determine whether to pay a petition?
130.35 How and when will the Secretary pay a petition?

Subpart E—Reconsideration Procedures

130.40 Reconsideration of denial of petitions.

Subpart F—Attorney Fees

130.50 Limitation on agent and attorney fees.
APPENDIX A TO PART 130—DEFINITION OF HIV INFECTION OR HIV
APPENDIX B TO PART 130—CONFIDENTIAL PHYSICIAN OR NURSE PRACTITIONER AFFIDAVIT
APPENDIX C TO PART 130—PETITION FORM, PETITION INSTRUCTIONS, AND DOCUMENTATION CHECKLIST

AUTHORITY: Secs. 101–108 of Pub. L. 105–369, 112 Stat. 3368 (42 U.S.C. 300c–22 note); sec. 215 of the Public Health Service Act (42 U.S.C. 216).

SOURCE: 65 FR 34864, May 31, 2000, unless otherwise noted.

Subpart A—General Provisions

§ 130.1 Purpose.

This part establishes criteria and procedures for implementation of the Ricky Ray Hemophilia Relief Fund Act of 1998 (the Act). This statute provides for compassionate payments to certain individuals with blood-clotting disorders, such as hemophilia, who contracted human immunodeficiency virus (HIV) due to contaminated antihemophilic factor within a specified time period, as well as to certain persons who contracted HIV from these individuals. In the event the individual eligible for payment is deceased, the Act also provides for payments to certain survivors of this individual.

§ 130.2 Definitions.

As used in this part:

(a) *Act* means the Ricky Ray Hemophilia Relief Fund Act of 1998, 42 U.S.C. 300c–22 note, as amended.

(b) *Antihemophilic factor* means any blood product (including, but not limited to, fresh frozen plasma, cryoprecipitate, factor VIII concentrate, and factor IX concentrate) used to treat a blood-clotting disorder.

(c) *Blood-clotting disorder* means a disorder (including, but not limited to, hemophilia and von Willebrand's disease) in which the blood does not clot normally, usually resulting in prolonged bleeding.

(d) *Child with HIV* means the individual described in § 130.10(c).

(e) *Former lawful spouse* means a person to whom an individual described in § 130.10(a):

(1) Was married according to the laws of the place where the person resided at

any time after the date of the individual's treatment with antihemophilic factor (this date of treatment must have been between July 1, 1982, and December 31, 1987); and

(2) Is no longer married.

(f) *Former lawful spouse with HIV* means the individual described in § 130.10(b)(2).

(g) *Fund* means the ''Ricky Ray Hemophilia Relief Fund,'' which is a Trust Fund established in the Treasury of the United States and administered by the Secretary of the Treasury.

(h) *Hemophilia* means a bleeding disorder in which a clotting factor (including, but not limited to, factors VIII or IX) is missing or does not function normally.

(i) *HIV infection* or *HIV* means any of the following:

(1) *For individuals diagnosed with the HIV infection at any age, including infants:* the presence of an opportunistic disease characteristic of AIDS, sufficient to satisfy the definition of HIV infection as set forth in Appendix A to this part; or

(2) *For individuals diagnosed with the HIV infection at over 15 months of age:* the presence of laboratory evidence of HIV based on identification of:

(i) HIV antibodies;

(ii) HIV viral antigens;

(iii) HIV viral cultures; or

(iv) Plasma HIV RNA; or

(3) *For infants diagnosed with the HIV infection due to perinatal transmission at or before 15 months of age:* identification of the presence of HIV by a positive virologic test (*i.e.*, detection of HIV by culture, HIV antigen, or HIV DNA or RNA polymerase chain reaction [PCR]).

(j) *Individual with a blood-clotting disorder and HIV* means the individual described in § 130.10(a).

(k) *Lawful spouse* means a person to whom an individual described in § 130.10(a) is married according to the laws of the place where the person resides on the date the petition is filed. If the laws of the place where the person resides consider an individual who is legally separated or in a common law marriage to be married, then such a person is a lawful spouse.

(l) *Lawful spouse with HIV* means the individual described in § 130.10(b)(1).

(m) *Perinatal transmission* means transmission of HIV infection from mother to child that occurs during pregnancy, delivery, or breastfeeding.

(n) *Person(s) with HIV* means all of the individuals described in § 130.10(a), (b) or (c).

(o) *Place* means any State of the United States of America, the District of Columbia, and United States territories, commonwealths, and possessions.

(p) *Secretary* means the Secretary of Health and Human Services and any other officer or employee of the Department to whom the authority involved has been delegated.

§ 130.3 Amount of payments.

If there are sufficient amounts in the Fund to make payments, the Secretary will make a single payment of $100,000 to eligible individuals, as defined in accordance with subpart B of this part.

Subpart B—Criteria for Eligibility

§ 130.10 Who is eligible for payment under the Act—living persons with HIV.

The following individuals are eligible for payment under the Act if they are living at the time that payment is to be made on a petition and have an HIV infection:

(a) An individual who has any form of blood-clotting disorder, such as hemophilia, who was treated with antihemophilic factor at any place defined in § 130.2(o), or at any diplomatic area or military installation of the United States, at any time during the time period from July 1, 1982, to December 31, 1987.

(b) An individual who is:

(1) The lawful spouse of the individual with a blood-clotting disorder and HIV; or

(2) The former lawful spouse of the individual with a blood-clotting disorder and HIV, if the former lawful spouse can assert with reasonable certainty, through medical documentation, transmission of HIV from the individual with a blood-clotting disorder and HIV.

(c) An individual who acquired the HIV infection through perinatal transmission from a parent who is the individual with a blood-clotting disorder and HIV, the lawful spouse with HIV or the former lawful spouse with HIV.

§ 130.11 Who is eligible for payment under the Act—survivors of persons with HIV.

(a) Survivors of persons with HIV, as described in § 130.10, are eligible for payment under the Act if:

(1) The person with HIV dies before filing a petition under the Act. In this case, an eligible survivor may file a petition as a survivor of the person with HIV, as set forth in § 130.22; or

(2) The person with HIV has filed a petition under the Act, but dies before payment is made. In this case, an eligible survivor must file an amendment to the petition in order to retain the assigned order number and to receive payment under the Act, as set forth in § 130.23.

(b) Payments to survivors shall be made in the following order:

(1) If the person with HIV is survived by a spouse who is living at the time of payment, the payment shall be made to the surviving spouse (*hereinafter* referred to as ''the surviving spouse'').

(2) If the person with HIV is not survived by a living spouse, the payment shall be made in equal shares to all children of the individual who are living at the time of payment (*hereinafter* referred to as ''the surviving child/children'').

(3) If the person with HIV is not survived by a spouse or children who are living at the time of payment, the payment shall be made in equal shares to the parents of the individual who are living at the time of payment (*hereinafter* referred to as ''the surviving parent(s))'.

(c) If the person with HIV is not survived at the time payment is to be made by any of the survivors listed in paragraph (b) of this section, no payments will be made for the person with HIV and the payment will revert back to the Fund.

(d) For purposes of this section, the following definitions apply:

(1) The term *spouse* means a person who was lawfully married to the person with HIV according to the laws of the place where the person resided at the time of death.

(2) The term *child* includes a recognized natural child, a stepchild who lived with the person with HIV in a regular parent-child relationship, and an adopted child.

(3) The term *parent* includes fathers and mothers through adoption.

Subpart C—Documentation Required for Complete Petitions

§ 130.20 Form of medical documentation.

In all instances in which medical documentation is referred to, medical documentation may be submitted in the following forms:

(a) Copies of relevant portions of medical records, records maintained by a physician, nurse, or other licensed health care provider, test results, prescription information, or other documentation deemed credible by the Secretary; or

(b) An affidavit, signed under penalty of perjury, by a physician, nurse practitioner or physician assistant, verifying that the medical criteria necessary for a petitioner to be eligible for payment under the Act are satisfied. Such an affidavit must include the physician's, nurse practitioner's or physician assistant's State of practice, and license, certification or registration number, as applicable. A sample affidavit is set forth at Appendix B to this part.

(Approved by the Office of Management and Budget under control number 0915–0244)

[65 FR 34864, May 31, 2000, as amended at 66 FR 58671, Nov. 23, 2001]

§ 130.21 What documentation is required for petitions filed by living persons with HIV?

The following rules apply to all petitions filed by persons with HIV:

(a) All petitions filed under the Act must include written medical documentation showing the following:

(1) That the individual described in § 130.10(a) has (or had) a blood-clotting disorder, such as hemophilia;

(2) That the individual with a blood-clotting disorder and HIV was treated

with antihemophilic factor at any time between July 1, 1982, to December 31, 1987; and

(3) That the individual with a blood-clotting disorder and HIV has (or had) an HIV infection under any of the criteria set out in the definition of HIV infection at § 130.2(i).

(b) *The individual.* Petitions filed by the individual with a blood-clotting disorder and HIV need only include the documentation described in paragraph (a) of this section.

(c) *The lawful spouse.* Petitions filed by the lawful spouse with HIV must include the following written documentation:

(1) The documentation described in paragraph (a) of this section;

(2) Medical documentation showing that the lawful spouse with HIV has an HIV infection; and

(3) A marriage certificate or other proof of a lawful marriage, which shows that the lawful spouse with HIV and the individual with a blood-clotting disorder and HIV are married.

(d) *The former lawful spouse.* Petitions filed by the former lawful spouse with HIV must include the following written documentation:

(1) The documentation described in paragraph (a) of this section;

(2) Medical documentation showing that the former lawful spouse with HIV has an HIV infection;

(3) A marriage certificate or other proof of a lawful marriage, which shows that the former lawful spouse with HIV and the individual with a blood-clotting disorder and HIV were married at any time after the date of the individual's treatment with antihemophilic factor (this date of treatment must have been between July 1, 1982, to December 31, 1987);

(4) A divorce certificate or other proof of termination of the marriage between the former lawful spouse with HIV and the individual with a blood-clotting disorder and HIV; and

(5) Medical documentation which shows with reasonable certainty that the former lawful spouse with HIV contracted HIV from the person with a blood-clotting disorder and HIV.

(e) *The child.* Petitions filed by the child with HIV must include the following written documentation:

(1) The documentation described in paragraph (a) of this section;

(2) Medical documentation showing that the child with HIV has an HIV infection;

(3) A birth certificate or other proof, which shows that the child with HIV is the child of:

(i) The individual with a blood-clotting disorder and HIV;

(ii) The lawful spouse with HIV; or

(iii) The former lawful spouse with HIV;

(4) A marriage certificate or other proof of a lawful marriage, which shows that the lawful spouse with HIV or the former lawful spouse with HIV and the individual with a blood-clotting disorder and HIV are/were married, *except* where the individual with a blood-clotting disorder and HIV is the mother of the child with HIV;

(5) Medical documentation showing that the child with HIV acquired an HIV infection through perinatal transmission from a parent who is:

(i) The individual with a blood-clotting disorder and HIV;

(ii) The lawful spouse with HIV; or

(iii) The former lawful spouse with HIV; and

(6) Where the child with HIV acquired an HIV infection through perinatal transmission from the former lawful spouse with HIV, medical documentation which shows with reasonable certainty that the former lawful spouse with HIV contracted HIV from the person with the blood-clotting disorder and HIV.

(Approved by the Office of Management and Budget under control number 0915–0244)

§ 130.22 What documentation is required for petitions filed by survivors of persons with HIV, which are filed in cases where the person with HIV dies before filing a petition?

(a) In those cases in which the person with HIV, as described in § 130.10, dies before filing a petition under the Act, a survivor of that person, as described in § 130.11, may file a petition.

(b) Petitions filed by survivors must include two types of information:

(1) Documentation regarding the person with HIV; and

(2) Documentation regarding the eligibility of the survivor to receive payments as a survivor of the person with HIV.

(c) Petitions filed by survivors must include the following information regarding the person with HIV:

(1) *The individual.* Petitions filed by a survivor of the individual with a blood-clotting disorder and HIV must include the documentation described in § 130.21(b).

(2) *The lawful spouse.* Petitions filed by a survivor of the lawful spouse with HIV must include the documentation described in § 130.21(c).

(3) *The former lawful spouse.* Petitions filed by a survivor of the former lawful spouse with HIV must include the documentation described in § 130.21(d).

(4) *The child.* Petitions filed by a survivor of the child with HIV must include the documentation described in § 130.21(e).

(d) Petitions filed by survivors must include the following information regarding the relationship between the survivor and the person with HIV:

(1) *The surviving spouse.* Petitions filed by the surviving spouse must include the following written documentation:

(i) A death certificate for the person with HIV, or other evidence of that individual's death;

(ii) A marriage certificate or other proof of a lawful marriage, which shows that the survivor was the spouse, as defined in § 130.11(d)(1), of the person with HIV; and

(iii) A sworn statement signed by the surviving spouse which states that the surviving spouse and the person with HIV were married at the time of that individual's death.

(2) *The surviving child/children.* Petitions filed by the surviving child/children must include the following written documentation:

(i) A death certificate for the person with HIV, or other evidence of that individual's death;

(ii) A birth certificate, adoption certificate, documentation that shows that the survivor is the stepchild of the person with HIV (for example, a certificate of marriage between the survivor's parent and the person with HIV), or other documentation which shows that the survivor is the child, as defined in § 130.11(d)(2), of the person with HIV; and

(iii) A sworn statement signed by the surviving child/children which either:

(A) States that, to the best of the petitioner's knowledge, there are no other survivors who are eligible for payment under the Act, as described in § 130.11 (*i.e.*, no eligible surviving spouses or other surviving children); or

(B) Provides information regarding other survivors who are eligible for payment under the Act.

(3) *The surviving parent(s).* Petitions filed by the surviving parent(s) must include the following written documentation:

(i) A death certificate for the person with HIV, or other evidence of that individual's death;

(ii) A birth certificate, adoption certificate or other documentation which shows that the survivor is the parent, as defined in § 130.11(d)(3), of the person with HIV; and

(iii) A sworn statement signed by the surviving parent(s) which either:

(A) States that, to the best of the petitioner's knowledge, there are no other survivors who are eligible for payment under the Act, as described in § 130.11 (*i.e.*, no eligible surviving spouse, surviving children or other surviving parents); or

(B) Provides information regarding other survivors who are eligible for payment under the Act.

(Approved by the Office of Management and Budget under control number 0915–0244)

§ 130.23 What documentation is required for amendments to petitions, which are filed by survivors of persons with HIV?

(a) The following survivors must file amendments to petitions in order to retain the assigned order number described in § 130.32 and to receive payment under the Act:

(1) A survivor of the person with HIV, when the person with HIV has filed a petition under the Act, but then died before receiving payment;

(2) The next-ranked survivor eligible to receive payment under the Act, as described in § 130.11(b), when a previously-ranked survivor has filed a petition or an amendment to a petition

as a survivor of the person with HIV, but then died before receiving payment; and

(3) In the case of petitions filed by multiple survivors (*i.e.,* multiple surviving children or multiple surviving parents), where one of the survivors dies before receiving payment, the other survivors must file an amendment in order to notify the Secretary that the payment should be made to, and divided among, only the remaining survivors.

(b) Survivors described in paragraph (a) of this section shall amend the original petition by filing the petition form set forth at Appendix C to this part, including the section pertaining to amendments to petitions.

(c) Amendments to petitions filed by survivors must include the following documentation:

(1) Survivors described in paragraph (a)(1) of this section must include the documentation described in § 130.22(d), which shows that the survivor is eligible to file a petition as a survivor of the person with HIV.

(2) Survivors described in paragraph (a)(2) of this section must include:

(i) The documentation described in § 130.22(d), which shows that the survivor is eligible to file a petition as a survivor of the person with HIV; and

(ii) A death certificate for the survivor whose petition is being amended, or other evidence of that survivor's death.

(3) Survivors described in paragraph (a)(3) of this section must include a death certificate for the survivor who has died, or other evidence of that survivor's death.

(d) Amendments to petitions filed by survivors described in paragraph (a) of this section will retain the same order number assigned to the original petition.

(e) In those cases in which the Secretary has reviewed the original petition prior to receiving an amendment to the petition, the Secretary will determine whether to pay the survivors described in paragraph (a) as follows:

(1) If the Secretary has determined that the original petition does not include all of the documentation described in this Subpart C (*i.e.,* it is incomplete), the survivor will be given the opportunity to complete the petition prior to a final determination in accordance with the procedures set forth at § 130.33.

(2) If the Secretary has determined that the original petition does not meet the requirements of the Act, the survivor will be so notified and payment will not be made. The survivor may seek reconsideration under § 130.40.

(3) If the Secretary has determined that the original petition meets the requirements of the Act, and the survivor meets the survivor requirements of the Act, the survivor will receive payment as described in § 130.3.

(f) In those cases in which the Secretary has not yet made the determination whether the original petition meets the requirements of the Act, the Secretary will review the amended petition according to the order number assigned to the original petition, and then determine whether the petition is complete and whether to pay the petition as described in paragraph (e) of this section.

(Approved by the Office of Management and Budget under control number 0915–0244)

§ 130.24 What additional documentation may the Secretary require to resolve eligibility or payment issues?

(a) In addition to the applicable documentation required under this subpart, the Secretary may require the petitioner to provide other documentation, as the Secretary deems appropriate, to resolve issues of eligibility, or of the procedure for payment, raised by a petition.

(b) Where a petition filed on behalf of a minor or other individual who is legally incompetent to receive payment has been approved for payment, the personal representative filing the petition on the individual's behalf must submit the following before payment can be made for the legally incompetent individual:

(1) Documentation of a guardianship or conservatorship, established in accordance with State and local law; and

(2) Information identifying a guardianship or conservatorship account.

(Approved by the Office of Management and Budget under control number 0915–0244)

[66 FR 58672, Nov. 23, 2001]

Subpart D—Procedures for Filing and Paying Complete Petitions

§ 130.30 Who may file a petition for payment or an amendment to a petition?

The following individuals may file a petition for payment under the Act:

(a) All eligible individuals, as described in subpart B of this part, including living persons with HIV and survivors of persons with HIV; and

(b) Personal representatives of eligible individuals:

(1) Where the eligible individual does not have the legal capacity to receive payment under the Act, as described in § 130.35(e); or

(2) Where the eligible individual does have the legal capacity to receive payment under the Act and signs the sworn statement included at the end of the petition.

(Approved by the Office of Management and Budget under control number 0915–0244)

§ 130.31 How and when is a petition for payment filed?

(a) In order to receive payment under the Act, all eligible individuals, as described in subpart B of this part, must file a complete petition with the Secretary. A complete petition is one that contains all of the required documentation described in Subpart C of this part.

(b) A copy of the petition form, which must be filed by all eligible individuals, including individuals with a blood-clotting disorder and HIV, the lawful spouse with HIV, the former lawful spouse with HIV, the child with HIV, and the survivors of persons with HIV, is set forth at Appendix C to this part. Appendix C includes the petition form, the instructions for filing the petition form, and a documentation checklist.

(c) Where there are multiple surviving children or surviving parents, payments on the petition will be made to each survivor separately. The survivors shall:

(1) File one petition form jointly, which will contain the required documentation for all survivors, and which will be signed by at least one survivor; or

(2) File separate petition forms, which together will contain all of the required documentation for all survivors, and which will be signed by each survivor.

(d) Petitions may be *obtained* from the Ricky Ray Program Office, Bureau of Health Professions, HRSA, Room 8A–54, 5600 Fishers Lane, Rockville, Maryland 20857.

(e) All petitions must be *submitted* to the Ricky Ray Program Office, Bureau of Health Professions, HRSA, Room 8A–54, 5600 Fishers Lane, Rockville, Maryland 20857.

(f) The date on which the Secretary will begin accepting petitions is July 31, 2000.

(1) In order to be eligible for review, petitions may be postmarked on or after this date. A legibly dated receipt from a commercial carrier or U.S. Postal Service will be accepted in lieu of a postmark. Petitions that are postmarked by a private meter will not be accepted.

(2) Petitions that are postmarked, or accompanied by a receipt from a commercial carrier or U.S. Postal Service, prior to this date *will be returned* to the petitioner. Petitions that are delivered by hand at any time *will be returned* to the petitioner.

(g) *Deadlines*. The *deadline for filing a petition is November 13, 2001*. To meet this deadline, the petition must be postmarked, or accompanied by a receipt from a commercial carrier or U.S. Postal Service, by such date. Any new petition filed after such date will be returned to the petitioner as ineligible for payment, even if the petitioner filed a timely Notice of Intent as provided in the procedure described in the FEDERAL REGISTER of March 24, 1999 (64 FR 14251).

(1) If a petitioner submits a petition to the Secretary by November 13, 2001, and the Secretary has determined, in accordance with § 130.34, that the petition does not meet the requirements of the Act, the petitioner may submit a

new petition for payment, which includes additional documentation that was not included in the original petition. The deadline for filing this new petition is November 13, 2001.

(2) If a petitioner submits a petition to the Secretary by November 13, 2001, and the Secretary has not yet made the determination whether the petition meets the requirements of the Act, the petitioner may supplement the original petition with additional documentation at any time until the date of the Secretary's determination.

(3) If a petitioner files an amendment to a petition, as described in § 130.23, the deadline for filing this amendment is the date of the Secretary's determination of eligibility or the date of payment, whichever is later.

(h) *Petitioners who filed claims under the Factor Concentrate Settlement.* Petitioners who filed claims under the class settlement in the case of *Susan Walker* v. *Bayer Corporation,et al.*, 96–C–5024 (N.D. Ill.) (*i.e.*, the Factor Concentrate Settlement) must file a complete petition with the Secretary, together with all required documentation, as described in subpart C of this part.

(1) If the petitioner submitted a claim in the Factor Concentrate Settlement which included all of the documents required to establish eligibility under the Act, he or she may submit original or duplicate copies of those documents to the Secretary.

(2) If the petitioner submitted a claim in the Factor Concentrate Settlement which included some, but not all, of the documents required to establish eligibility under the Act, he or she may submit original or duplicate documents as described in paragraph (h)(1) of this section, together with the additional documents required under the Act.

(3) If the petition is filed by someone other than an individual who filed a claim in the Factor Concentrate Settlement (e.g., survivors of the person with HIV, personal representatives), he or she may submit original or duplicate documents as described in paragraph (h)(1) or (h)(2) of this section in order to satisfy that portion of the petition relating to the person with HIV.

(Approved by the Office of Management and Budget under control number 0915–0244)

§ 130.32 How and when will the Secretary determine the order of receipt of petitions?

(a) The order that the petition was received by the Secretary will be determined by the postmark date or the date indicated by a commercial carrier or the U.S. Postal Service, in accordance with § 130.31(f).

(b) If the Secretary receives more than one petition which is either postmarked or dated by a commercial carrier or the U.S. Postal Service on the same date, the Department will conduct a random selection of each day's submissions to determine the order within each group of petitions.

(c) A number will be assigned to each petition indicating the order in which it is selected.

§ 130.33 How will the Secretary determine whether a petition is complete?

(a) If the Secretary determines that a petition does not include all of the documentation described in subpart C of this part (*i.e.*, it is incomplete), the petitioner will be given the opportunity to complete the petition prior to a final determination.

(b) The petitioner will be notified that the Secretary has determined that the petition is incomplete and, for purposes of retaining the assigned order number described in § 130.32, will be given 60 calendar days from the date of the notice to submit the missing information. If the petitioner submits the missing information within 60 calendar days, and the Secretary determines that the petition meets the requirements of the Act, the petitioner will be paid according to the assigned order number.

(c) If the petitioner is unable to complete the petition, the petitioner may submit written documentation to the Secretary, within 60 calendar days, which shows good cause why the required medical or legal documentation is unavailable. If the Secretary determines that the petitioner has provided an adequate showing of good cause and is otherwise eligible for payment under the Act, the petitioner will be paid according to the assigned order number. The Secretary may allow additional time beyond the 60-day deadline, as the

Secretary deems appropriate, for the petitioner to provide the documentation required to complete the petition.

(d) The Secretary will process the petition according to § 130.34 if:

(1) The petition does not include the required documentation, as described in subpart C, even after the opportunity is given to complete it;

(2) The 60-day deadline, or the extended deadline under § 130.33(c), as applicable, to complete the petition is not met; or

(3) An adequate showing of good cause why the required medical or legal documentation is unavailable is not provided.

[65 FR 34864, May 31, 2000, as amended at 66 FR 58672, Nov. 23, 2001]

§ 130.34 How will the Secretary determine whether to pay a petition?

(a) Subject to available resources, the Secretary will review each petition filed under the Act and make one of the following determinations:

(1) If the Secretary concludes that the petition does not meet the requirements of the Act, the petitioner will be so notified and payment will not be made. These petitioners may seek reconsideration under § 130.40.

(2) If the Secretary concludes that the petition does meet the requirements of the Act, the petitioner will receive payment as described in § 130.3.

(b) Petitions will be reviewed based upon the assigned number indicating the order of receipt, as described in § 130.32.

§ 130.35 How and when will the Secretary pay a petition?

(a) To the extent practicable, determinations on complete petitions will be made not later than 120 calendar days after the date that the Secretary determines that the petition is complete.

(b) Payments on petitions will be made as soon as practicable after a determination that a complete petition meets the requirements of the Act.

(c) For each eligible individual, as described in subpart B of this part, the Secretary will make only one payment on a petition.

(d) Where there are multiple surviving children or surviving parents, survivors who have submitted all required documentation and are otherwise eligible for payment under the Act, will be paid their share(s) of the payment, as described in § 130.11(b)(2) and (3). If any surviving children or surviving parents who are otherwise eligible for payment have not submitted the required documentation, their share(s) of the payment will remain in the Fund until such time as they complete their petitions by submitting such documentation. If they have not submitted the required documentation by the time that the Fund terminates, their share(s) will revert back to the Treasury.

(e) Payments on petitions will be made to eligible individuals, as described in subpart B, unless the eligible individual is legally incompetent to receive payment. A personal representative may receive payment for a legally incompetent individual by submitting the following written documentation to the Secretary:

(1) Proof showing that the eligible individual does not have the legal capacity to receive payment under the Act, such as a birth certificate showing that the eligible individual is a minor, or other evidence showing that the eligible individual is legally incompetent; and

(2) Proof showing that the personal representative has the authority to receive payment for the eligible individual, such as proof of legal guardianship.

Subpart E—Reconsideration Procedures

§ 130.40 Reconsideration of denial of petitions.

(a) *Right of reconsideration.* Every individual who has filed a petition and has been denied payment may seek reconsideration. To seek such reconsideration, the petitioner must put a request for reconsideration in writing and send it to the Deputy Associate Administrator for Health Professions, Health Resources and Services Administration, Room 8A–54, 5600 Fishers Lane, Rockville, Maryland 20857. The request for reconsideration must be received by the Deputy Associate Administrator for Health Professions within

60 calendar days of the date the Department denied the petition for payment.

(b) *Request for reconsideration*. The request for reconsideration must state the reasons why the petitioner is seeking reconsideration. However, the request for reconsideration may not include any additional documentation that was not included in the completed petition.

(c) *Review process*. When the Deputy Associate Administrator for Health Professions receives a request for reconsideration, he will convene a panel of three individuals, who are independent of the Ricky Ray Program Office, to review the initial determination and make a recommendation regarding payment. The Deputy Associate Administrator for Health Professions will review the panel's recommendation and then determine whether the petitioner is eligible for payment under the Act. The Deputy Associate Administrator for Health Professions' determination will constitute the Department's final action on the request for reconsideration. If the determination is that the petitioner is eligible for payment, the petitioner will receive payment as described in § 130.3. If the determination is that the petitioner is not eligible for payment, the Deputy Associate Administrator for Health Professions will inform the petitioner in writing of the reasons for this determination.

Subpart F—Attorney Fees

§ 130.50 Limitation on agent and attorney fees.

As provided by section 107 of the Act:

(a) Notwithstanding any contract, the representative of an individual may not receive, for services rendered in connection with the petition of an individual under this Act, more than 5 percent of a payment made under this Act (*i.e.*, $5,000) on the petition.

(b) Any such representative who violates this section is subject to a fine of not more than $50,000.

APPENDIX A TO PART 130—DEFINITION OF HIV INFECTION OR HIV

APPENDIX A

Definition of HIV infection or HIV for purposes of §130.2(i)(1):

(1) Except as provided in section (2) below, a diagnosis of HIV infection under 130.2(i)(1) may be made on the basis of a diagnosis of one or more of the following opportunistic diseases:

- Candidiasis of bronchi, trachea, or lungs
- Candidiasis, esophageal
- Cervical cancer, invasive
- Chronic lymphoid interstitial pneumonitis (in a child under 13 years of age)
- Coccidioidomycosis, disseminated or extrapulmonary
- Cryptococcosis, extrapulmonary
- Cryptosporidiosis, chronic intestinal (greater than 1 month's duration)
- Cytomegalovirus disease (other than liver, spleen, or nodes)
- Cytomegalovirus retinitis (with loss of vision)
- Encephalopathy, HIV-related
- Herpes simplex: chronic ulcer(s) (greater than 1 month's duration); or bronchitis, pneumonitis, or esophagitis
- Histoplasmosis, disseminated or extrapulmonary
- Isosporiasis, chronic intestinal (greater than 1 month's duration)
- Kaposi's sarcoma
- Lymphoma, Burkitt's (or equivalent term)
- Lymphoma, immunoblastic (or equivalent term)
- Lymphoma, non-Hodgkin's
- Lymphoma, primary, or brain
- Mycobacterium avium complex or M. kansasii, disseminated or extrapulmonary
- Mycobacterium tuberculosis, any site (pulmonary or extrapulmonary)
- Mycobacterium, other species or unidentified species, disseminated or extrapulmonary
- Pneumocystis carinii pneumonia
- Pneumonia, recurrent
- Progressive multifocal leukoencephalopathy
- Salmonella septicemia, recurrent
- Toxoplasmosis of brain
- Wasting syndrome due to HIV

(2) The opportunistic diseases listed in section (1) above may be used to diagnose an HIV infection, unless: the opportunistic diseases are diagnosed based on a known immunodeficiency disease other than HIV infection, including, but not limited to: (i) Primary immunodeficiency diseases - severe combined immunodeficiency, DiGeorge syndrome, Wiskott-Aldrich syndrome, ataxia-telangiectasia, graft versus host disease, neutropenia, neutrophil function abnormality, agammaglobulinemia, or hypogammaglobulinemia with raised IgM; and (ii) Secondary immunodeficiency associated with immunosuppressive therapy, lymphoreticular malignancy (if less than 3 months after the diagnosis of the aforementioned opportunistic disease), or starvation.

These excerpts were taken from:

Current Trends Update: Acquired Immunodeficiency Syndrome (AIDS) - United States, MMWR 32(52); 688-91, January 6, 1984.

Current Trends Revision of the Case Definition of Acquired Immunodeficiency Syndrome for National Reporting - United States, MMWR 34(25); 373-75, June 28, 1985.

1993 Revised Classification System for HIV Infection and Expanded Surveillance Case Definition for AIDS Among Adolescents and Adults, MMWR 41(RR-17), December 18, 1992.

For further information, please consult these documents.

APPENDIX B TO PART 130—CONFIDENTIAL PHYSICIAN OR NURSE PRACTITIONER AFFIDAVIT

OMB No. 0915-0244
Expiration date: 02-14-2001

RICKY RAY HEMOPHILIA RELIEF FUND
CONFIDENTIAL PHYSICIAN OR NURSE PRACTITIONER AFFIDAVIT

The U.S. Congress enacted the Ricky Ray Hemophilia Relief Fund Act in 1998 to make compassionate payments of $100,000 to certain individuals with blood-clotting disorders, such as hemophilia, who were treated with antihemophilic factor between July 1, 1982, and December 31, 1987, and who contracted HIV(referred to in Section A below). Certain spouses, former spouses and children (referred to in Section B below) who contracted HIV from these individuals may also be eligible for compassionate payments. Specified survivors of these individuals may also receive payments.

This affidavit regarding medical documentation is to be completed and signed by a physician or nurse practitioner in lieu of medical records or test results. Although you may be asked to provide additional information, complete only those portions of this affidavit that you can answer based on your personal knowledge or a review of medical records.

PRIVACY ACT STATEMENT

Section 103 of Public Law 105-369 and the Debt Collection Improvement Act of 1996 authorize collection of this information. It will be used to determine your eligibility to receive payments. This information will be disclosed to the Department of Health and Human Services and its consultants; and Federal, State or local law enforcement agencies if the Government becomes aware of a possible violation of civil or criminal law. Furnishing the information on this form, including the Social Security Number, is voluntary, but failure to do so may delay or prevent the receipt of a payment. The information collected will be maintained confidentially pursuant to the Privacy Act.

CHECK APPLICABLE BOXES AND PROVIDE INFORMATION AS REQUESTED.

I am a physician or a nurse practitioner. I have been requested by an individual to complete this affidavit and to provide information that I understand will be kept strictly confidential and be used solely to determine eligibility for a compassionate payment under the Ricky Ray Hemophilia Relief Fund Program.

SECTION A. INFORMATION ON INDIVIDUAL WITH BLOOD CLOTTING DISORDER AND HIV

He or she is a person with blood-clotting disorder who has/had HIV and was treated with antihemophilic factor at any time between July 1, 1982, and December 31, 1987.

Name of Individual: _____

Note: the information requested in the following three statements is required for all individuals described in Section A.

[ ] He/she has/had the following blood-clotting disorder:

[ ] He/she received an antihemophilic factor between July 1, 1982, and December 31, 1987.

[ ] He/she was diagnosed as having HIV.

SECTION B. INFORMATION ON ELIGIBLE INDIVIDUAL WITH HIV IF DIFFERENT FROM SECTION A

This section pertains to other individuals who may be eligible for payment under the Program because of their familial relationship to the person described in Section A.

Name of Individual: _____

[ ] He/she was diagnosed as having HIV. **(Note: this information is required for all individuals in Section B).**

(Section B continued, next page)

HRSA-542 (5/00) FRONT

RICKY RAY HEMOPHILIA RELIEF FUND – AFFIDAVIT

[ ] There is reasonable certainty that this individual contracted HIV from the individual identified in Section A. "Reasonable certainty" is defined as having no knowledge based on medical records or other documents that the individual contracted HIV from a source other than the individual identified in Section A. **(Note: This information is required only for an individual filing a petition as the former spouse of the individual described in Section A).**

[ ] This individual acquired HIV through perinatal transmission (transmission of HIV infection from mother to child that occurs during pregnancy, delivery, or breast feeding) from _____ _____. **(Note: This information is required only for an individual filing a petition because he/she acquired HIV through perinatal transmission from the individual in Section A or that individual's current or former spouse).**

SECTION C. SIGNATURE AND SWORN STATEMENT OF PHYSICIAN OR NURSE PRACTITIONER

I swear or affirm under penalty of perjury that the answers I have given to the medical questions listed above in this affidavit are true and correct to the best of my knowledge, information, and belief. (18 U.S.C. § 1621)

Signature: _____ Date: _____

Name (typed or printed legibly): _____

License Number and State Where Licensed: _____

Full Address (number and street): _____

City, State, and Zip Code: _____

Phone: _____

Refer to the definitions for several medical terms in the Rule, 42 CFR Part 130: antihemophilic factor §130.2(b), blood-clotting disorder §130.2(c), hemophilia §130.2(h), HIV infection or HIV §130.2(i), perinatal transmission §130.2(m).

PUBLIC BURDEN STATEMENT

An agency may not conduct or sponsor, and any person is not required to respond to, a collection of information unless it displays a currently valid OMB Control Number. The OMB Control Number for this project is 0915-0244. Public reporting burden for this collection of information is estimated to average 1 hour per response, including the time for reviewing instructions, searching existing data sources, gathering and maintaining the data needed, and completing and reviewing the collection of information.

HRSA-542 (5/00) BACK

APPENDIX C TO PART 130—PETITION FORM, PETITION INSTRUCTIONS, AND DOCUMENTATION CHECKLIST

OMB No. 0915-0244
Expiration date: 02-14-2001

RICKY RAY HEMOPHILIA RELIEF FUND
PETITION

This petition is to be used by all parties who may be eligible for payment under the Ricky Ray Hemophilia Relief Fund Act. Refer to the Ricky Ray Documentation Checklist for the supporting documentation that you must provide with the petition. **The petition and its documentation are subject to audit by the U.S. Department of Health and Human Services' Office of Inspector General.**

PRIVACY ACT STATEMENT

Section 103 of Public Law 105-369 and the Debt Collection Improvement Act of 1996 authorize collection of this information. It will be used to determine your eligibility to receive payments. This information will be disclosed to the Department of Health and Human Services and its consultants; and Federal, State or local law enforcement agencies if the Government becomes aware of a possible violation of civil or criminal law. Furnishing the information on this form, including the Social Security Number, is voluntary, but failure to do so may delay or prevent the receipt of a payment. The information collected will be maintained confidentially pursuant to the Privacy Act.

SECTION A. INDIVIDUAL WITH BLOOD-CLOTTING DISORDER AND HIV
This section is mandatory for all petitioners

Check the instructions for Section A.

Name: _____

Social Security Number: _____ Date of Birth: _____

If no longer living, provide date of death: _____

Complete address information if individual is living

Address: _____

City: _____ State: _____ Zip: _____

Daytime phone: _____

SECTION B. ELIGIBLE PERSON WITH HIV (OTHER THAN INDIVIDUAL IDENTIFIED IN SECTION A)
This section is required for the lawful spouse, former lawful spouse, child and their survivors

Check the instructions for Section B.

Name: _____

Social Security Number: _____ Date of Birth: _____

If no longer living, provide date of death: _____

Complete address information if individual is living

Address: _____

City: _____ State: _____ Zip: _____

Daytime phone: _____

RELATIONSHIP TO INDIVIDUAL IN SECTION A *(check one)*:

[ ] Lawful spouse (husband or wife) with HIV
[ ] Former lawful spouse (husband or wife) with HIV
[ ] Child with HIV (if person in Section A is the mother)
[ ] Child with HIV of the lawful wife with HIV
[ ] Child with HIV of the former lawful wife with HIV

HRSA-541 (5/00) PAGE 1 OF 3

RICKY RAY HEMOPHILIA RELIEF FUND – PETITION

SECTION C. SURVIVOR OF ELIGIBLE PERSON WITH HIV
This section is required of all survivors

Check the instructions for Section C.

Name: _____

Social Security Number: _____ Date of Birth: _____

Address: _____

City: _____ State: _____ Zip: _____

Daytime phone: _____

SURVIVORSHIP *(check one)*:

[ ] I am filing the petition as a survivor of the individual in Section A –OR –

[ ] I am filing the petition as a survivor of the person in Section B

NATURE OF THE SURVIVOR'S RELATIONSHIP TO THE INDIVIDUAL IN SECTION A OR THE PERSON IN SECTION B *(check one)*:

[ ] Lawful husband or wife at the time of the person's death, and I attest, to the best of my knowledge, that the person with HIV and I were married according to the laws of the place where the person with HIV and I resided at the time of his/her death

[ ] Child or stepchild and there is no surviving spouse

[ ] Parent and there is no surviving spouse or surviving children

SURVIVING CHILDREN AND PARENTS MUST CHECK THE APPROPRIATE BOX *(check one)*:

[ ] To the best of my knowledge, there are no other survivors who are eligible for payment under the Act (i.e., for child survivors, there is no eligible surviving spouse and no other surviving children; for parent survivors, there are no eligible surviving spouses, surviving children, or other surviving parent);

[ ] There are other survivors who are eligible for payment under the Act. I am providing all of their full names and their relationship to the person we survived.
If this box is checked, list survivors:

Name: _____ Name: _____
Relationship: _____ Relationship: _____

Name: _____ Name: _____
Relationship: _____ Relationship: _____

(If you need more space, add another page listing all of the eligible survivors as described above.)

AMENDMENT TO A PREVIOUSLY SUBMITTED PETITION

Use only if the following applies to you. If so, check the box and provide the name requested.

- **If you are a survivor of an individual who has already submitted a petition, but who died before receiving a compassionate payment, please check the box below and fill in the name of that deceased person.**
- **If another survivor filed a petition or an amendment to a previously submitted petition, but then died before receiving a payment, check the box below and fill in the name of that deceased person.**
- **If the original petition was filed by multiple surviving children or parents and any of those survivors has died, check the box below and fill in the name of the survivor who filed the previous petition.**

[ ] I am amending the petition previously submitted by _____.

HRSA-541 (5/00) PAGE 2 OF 3

SECTION D. PERSONAL REPRESENTATIVE

Complete this section if you are the attorney or other representative for the eligible individual. If this section is completed, all communications related to this petition will go to the personal representative.

Check instructions for Section D.

Name: _____

Address: _____

City: _____ State: _____ Zip: _____

Daytime phone: _____ Filing for: _____

Nature of relationship to eligible individual (e.g., attorney, guardian, other): _____

Does the eligible individual have the legal capacity to receive payments?

[ ] Yes – OR –

[ ] No. (e.g., a minor or an individual who is otherwise incompetent).

If no, please explain: _____

Signature of Personal Representative: _____

SECTION E. SIGNATURE OF PETITIONER

This section is required of all petitioners

Check the instructions for Section E.

Reminder: Attach all necessary documentation. See Documentation Checklist.

I swear or affirm under penalty of perjury that the information in this petition and all submitted documentation is true and correct to the best of my knowledge, information, and belief (18 USC §1621).

Name (printed clearly or typed): _____

Signature: _____ Date: _____

Submit this petition and the required medical and legal documentation to: Ricky Ray Program Office
Bureau of Health Professions
5600 Fishers Lane, Room 8A-54
Rockville, MD 20857

PUBLIC BURDEN STATEMENT

An agency may not conduct or sponsor, and any person is not required to respond to, a collection of information unless it displays a currently valid OMB Control Number. The OMB Control Number for this project is 0915-0244. Public reporting burden for this collection of information is estimated to average 3 hours per response, including the time for reviewing instructions, searching existing data sources, gathering and maintaining the data needed, and completing and reviewing the collection of information.

RICKY RAY HEMOPHILIA RELIEF FUND
PETITION INSTRUCTIONS

The U.S. Congress enacted the Ricky Ray Hemophilia Relief Fund Act in 1998 (the Act) to make compassionate payments of $100,000 to certain individuals with blood-clotting disorders, such as hemophilia, who were treated with antihemophilic factor between July 1, 1982, and December 31, 1987, and contracted HIV. Such individuals must have been treated with the antihemophilic factor in any State of the United States of America, the District of Columbia, U.S. territories, commonwealths and possessions, or at any diplomatic area or military installation of the United States. Husbands and wives who contracted HIV from those individuals; children who acquired HIV from their mothers during pregnancy, delivery, or breast feeding; and certain surviving family members may also be eligible for payments.

A. Complete the relevant sections of the petition. ***All petitioners must complete Section A***, which requests information regarding the individual with the blood-clotting disorder and HIV. *All information you supply will be kept strictly confidential in accordance with the Privacy Act, and will be used solely to determine your eligibility to receive payments under the Ricky Ray Hemophilia Relief Fund Act.* For more information, consult the Notification of New System of Records, 64 Fed. Reg. 69,274 (Dec. 10, 1999).

B. Consult the Documentation Checklist for the category that best describes you. Then provide the required medical and legal documentation listed with your category to support your petition. This documentation must be submitted before your petition may be approved for payment.

C. Send your completed petition package to:

The Ricky Ray Program Office
Bureau of Health Professions
5600 Fishers Lane, Room 8A-54
Rockville, MD 20857

All petitions must be postmarked or accompanied by a receipt from a commercial carrier or the U.S. Postal Service no sooner than July 31, 2000 and no later than November 13, 2001. Petitions postmarked before July 31, 2000 or after November 13, 2001 will be returned unopened.

GENERAL INSTRUCTIONS FOR ALL PETITIONERS

1. A separate petition must be submitted for each HIV-infected person who is eligible for payment (the individual with a blood-clotting disorder, the lawful spouse, the former lawful spouse or the child).

2. If you qualify for multiple payments (e.g., you are an eligible, HIV-infected person and you are a survivor of another HIV-infected person; you are a survivor of two HIV-infected persons), you must submit a separate petition for each claim.

(General Instructions continued, next page)

If you have any questions, go to the Ricky Ray web-site, www.hrsa.gov/bhpr/rickyray, or call the toll-free number, 1-888-496-0338.

3. Multiple surviving children or surviving parents may submit one joint petition for the one, shared payment (e.g., the surviving children when there is no surviving spouse, or the surviving parents when there is no surviving spouse or surviving children). Survivors may also submit separate petitions.

4. Keep a copy of all forms and documentation for your own records.

CHANGES IN INFORMATION PROVIDED

Should there be a change in the information you provided with your Petition, you are required to notify the Ricky Ray Program Office at the address above. Please note that if you fail to provide us with this information, we may not be able to contact you directly with information on the next steps in processing your petition.

FILLING OUT THE PETITION

SECTION A – INSTRUCTIONS

This section is required for all petitioners

This section describes the individual with a blood-clotting disorder, who was treated with antihemophilic factor, and who has HIV. Enter the requested information.

- **Name**: The full name of the individual with a blood-clotting disorder and HIV.
- **Social Security Number**: That individual's 9-digit Social Security Number.
- **Date of Birth**: That individual's date of birth (month, day, and year).
- **If the individual is no longer living, provide the date of death:** That individual's date of death, if applicable (month, day, and year).
- **If the individual with a blood-clotting disorder and HIV is living**:
  - **Address:** That individual's current home address.
  - **City:** That individual's current city of residence.
  - **State**: That individual's current state of residence.
  - **Zip:** The 5 or 9 digit zip code of that individual's current residence.
  - **Daytime phone**: That individual's daytime telephone number, including the area code.

  If the individual with a blood-clotting disorder and HIV lives outside of the United States of America, in the State field, enter the country. In the Zip field, use any applicable mailing code. In the phone field, include the international dialing code for the country.

If you have any questions, go to the Ricky Ray web-site, www.hrsa.gov/bhpr/rickyray, or call the toll-free number, 1-888-496-0338.

SECTION B – INSTRUCTIONS

Complete this section if you are the lawful spouse with HIV of the individual with a blood-clotting disorder and HIV, a former lawful spouse with HIV, a child who acquired HIV through perinatal transmission, or their survivor(s)

This section describes a lawful spouse with HIV, a former lawful spouse with HIV, or a child who acquired HIV perinatally. Enter the requested information.

- **Name:** The full name of the lawful spouse with HIV, the former lawful spouse with HIV, or the child who acquired HIV through perinatal transmission.
- **Social Security Number**: That person's 9-digit Social Security Number.
- **Date of Birth**: That person's date of birth (month, day, and year).
- **If the individual is no longer living, provide the date of death**. That person's date of death, if applicable (month, day, and year).
- **If the person is living**:
  - **Address:** That person's current home address.
  - **City:** That's person's current city of residence.
  - **State**: That person's current state of residence.
  - **Zip:** 5 or 9 digit zip code of that person's current residence.
  - **Daytime phone**: The daytime telephone number, including the area code.

  If the lawful spouse with HIV, the former lawful spouse with HIV, or the child who acquired HIV perinatally lives outside of the United States of America, in the State field, enter the country. In the Zip field, use any applicable mailing code. In the phone field, include the international dialing code for the country.
- **Relationship to individual in Section A (Check one):** Check the appropriate box indicating whether the person identified in Section B is the lawful spouse (husband or wife) with HIV; the former lawful spouse (husband or wife) with HIV, or the child with HIV. If the person identified in Section B is the child with HIV, check the third box if the individual identified in Section A is the child's birth mother; check the fourth box if the child's birth mother is the lawful spouse of the individual identified in Section A; check the fifth box if the child's birth mother was the former lawful spouse of the individual identified in Section A. Note that a child with HIV who checked the fifth box may be eligible for payment even if the individual identified in Section A is not the child's father.

SECTION C – INSTRUCTIONS

Complete this section if you are filing a petition as a survivor

This section describes a surviving spouse, child, or parent of a deceased person with HIV. The lawful spouse can always file a petition. The surviving child or children can file a petition if there is no surviving spouse. The surviving parent or parents can file a petition if there is no surviving spouse or are no surviving children. Enter the requested information.

(Section C continued, next page)

If you have any questions, go to the Ricky Ray web-site, www.hrsa.gov/bhpr/rickyray, or call the toll-free number, 1-888-496-0338.

- **Name:** The survivor's full name.
- **Social Security Number**: The survivor's 9-digit Social Security Number.
- **Date of Birth**: The survivor's date of birth (month, day, and year).
- **Address:** The survivor's current home address.
- **City:** The survivor's current city of residence.
- **State**: The survivor's current state of residence.
- **Zip:** 5 or 9 digit zip code of the survivor's current residence.
- **Daytime phone**: The survivor's daytime telephone number, including the area code.

If the survivor filing the petition lives outside of the United States of America, in the State field, enter the country. In the Zip field, use any applicable mailing code. In the phone field, include the international code for the country.

- **Survivorship (check one)**: Check the first box if you are a survivor of the individual with HIV and a blood-clotting disorder. Check the second box if you are a survivor of a person with HIV who is not the individual with a blood-clotting disorder (e.g., the lawful spouse, the former lawful spouse or the child). If you are a survivor of both, you may be eligible for two payments. In that case, file two separate petitions; check the first box in one petition and the second box in the other.
- **Nature of the survivor's relationship to the individual in Section A or the person in Section B (check one):** Check the appropriate box to indicate whether you were the lawful husband or wife at the time of the death of the person with HIV; the child or stepchild, where there is no surviving spouse; or the parent, where there is no surviving spouse or surviving children.
- **Surviving children or parents (check one):** Check the first box if you are the only survivor of the person with HIV who is eligible for payment under the Act. Check the second box if there are other eligible survivors. If you checked the second box, provide further information for each of the other eligible survivors:

  – **Name**: The name of the survivor(s) other than yourself; and

  – **Relationship**: The relationship to the person with HIV who died. (e.g., child, parent).

  Four areas are provided on the form. If you need more space, use additional paper and list all eligible survivors.

AMENDMENT TO A PREVIOUSLY SUBMITTED PETITION – INSTRUCTIONS

Complete this section only if you are a survivor amending a petition

Under three specific circumstances described below, survivors of persons with HIV must file an amendment to a previously submitted petition in order to retain the original assigned order number and to receive payment under the Act. Survivors must use the petition form to amend a petition. If you meet any of the three circumstances, check the box and fill in the full name of the petitioner whose petition you are amending.

- If you are a survivor of a person who has already submitted a petition, but who died before receiving a compassionate payment, check the box and fill in the name of that deceased individual.

(Amendment continued, next page)

If you have any questions, go to the Ricky Ray web-site, www.hrsa.gov/bhpr/rickyray, or call the toll-free number, 1-888-496-0338.

- If another survivor filed a petition or an amendment to a previously submitted petition, but then died before receiving a payment, check the box and fill in the name of that deceased person.
- If the original petition was filed by multiple surviving children or parents and any of those survivors has died, check the box and fill in the name of the survivor who filed the previous petition.

SECTION D – INSTRUCTIONS

Complete this section if you are a personal representative of any eligible individual

This section describes an attorney or other representative for the eligible individual, if any. If this section is completed, all communications related to the petition will go directly to the personal representative. Enter the requested information.

- **Name:** The personal representative's full name.
- **Address:** The personal representative's current home or office address.
- **City:** The personal representative's current city of office or residence.
- **State**: The personal representative's current state of office or residence.
- **Zip:** 5 or 9 digit zip code of the personal representative's current office or residence.
- **Daytime phone**: The daytime telephone number of the personal representative, including the area code.
- **Filing for:** The name of the eligible individual on whose behalf you are filing a petition.
- **Nature of relationship to eligible individual**. Fill in the blank indicating attorney, guardian or other (be specific).
- **Does the eligible individual have the legal capacity to receive payments?** Check the "Yes" box if the person you are representing has the legal capacity. Check the "No" box if the person you are representing does not have the legal capacity to receive payments (e.g., you represent a minor or an individual who is otherwise incompetent). In the space provided, please explain.

If the personal representative lives or works outside of the United States of America, in the State field, enter the country. In the Zip field, use any applicable mailing code. In the phone field, include the international dialing code for the country.

- **Signature of Personal Representative:** The personal representative's original signature in ink.

SECTION E – INSTRUCTIONS

All petitioners or their representatives must complete this section

All eligible individuals must sign the petition, unless he/she does not have the legal capacity to receive payments under the Act. In that case, a personal representative must sign for the individual (even if the personal representative also signed in Section D above). If multiple surviving children or surviving parents are filing jointly, at least one of these survivors must sign the petition. Enter the requested information.

- **Name (printed clearly or typed):** The name of the person signing the petition, presented legibly.

(Section E continued, next page)

If you have any questions, go to the Ricky Ray web-site, www.hrsa.gov/bhpr/rickyray, or call the toll-free number, 1-888-496-0338.

- **Signature:** An original signature in ink.
- **Date:** Date petition was signed (month, day, and year).

USE OF SOCIAL SECURITY NUMBERS

Pursuant to the Debt Collection Improvement Act of 1996, and in furtherance of the Ricky Ray Hemophilia Relief Fund Act of 1998, the Petition asks petitioners to provide social security account numbers. This information will be used by the Department of Health and Human Services to verify the identity of individuals filing petitions and to determine their eligibility for payment. This information will also be used by the Department of the Treasury to transmit payment data, by electronic means, to the financial institutions of individuals deemed eligible for a compassionate payment. Furnishing this information on the Petition is voluntary, but failure to do so may delay or prevent the receipt of a compassionate payment.

If you have any questions, go to the Ricky Ray web-site, www.hrsa.gov/bhpr/rickyray, or call the toll-free number, 1-888-496-0338.

RICKY RAY HEMOPHILIA RELIEF FUND
PETITION DOCUMENTATION CHECKLIST

To determine the documentation you need to complete your petition, please check those options below that apply to you, and provide the documentation as described. Also, all petitions must be filled out completely and signed under penalty of perjury.

CHECK BOX	CATEGORY OF ELIGIBILITY	REQUIRED DOCUMENTATION
	1. PERSONS WITH HIV	
☐	**The individual with a blood-clotting disorder and HIV.** An HIV infected individual who has a blood-clotting disorder, such as hemophilia, who was treated with antihemophilic factor at any time during the period from July 1, 1982, to December 31, 1987, in any state of the United States of America, the District of Columbia, U.S. territories, commonwealths, and possessions, or at any diplomatic area or military installation of the United States.	**Medical documentation showing that the individual with a blood-clotting disorder and HIV:** (1) has a blood-clotting disorder, such as hemophilia; (2) was treated with antihemophilic factor at any time between July 1, 1982, and December 31, 1987; and (3) has an HIV infection. This medical documentation may be submitted in the following forms: (a) copies of relevant portions of medical records, records maintained by a doctor, nurse, or other licensed health care provider, test results, prescription information, or other documentation possibly deemed credible by the Secretary (e.g., infusion logs and packing slips); or (b) an affidavit, signed under penalty of perjury, by a doctor or nurse practitioner, verifying that the medical criteria necessary for a petitioner to be eligible for payment under the Act are satisfied. The affidavit must include the doctor's or nurse practitioner's state and license number. The affidavit is contained in Appendix B.

If you have any questions, go to the Ricky Ray web-site, www.hrsa.gov/bhpr/rickyray, or call the toll-free number, 1-888-496-0338.

CHECK BOX	CATEGORY OF ELIGIBILITY	REQUIRED DOCUMENTATION
	PERSONS WITH HIV *(Continued)*	
☐	**The lawful spouse with HIV.** An HIV infected person who is the lawful spouse of an individual with a blood-clotting disorder and HIV, according to the laws of the place where the lawful spouse resides on the date this petition is filed.	**Medical documentation showing that the individual with a blood-clotting disorder and HIV:** (1) has (or had) a blood-clotting disorder, such as hemophilia; (2) was treated with antihemophilic factor at any time between July 1, 1982, and December 31, 1987; and (3) has (or had) an HIV infection. **Medical documentation showing that the lawful spouse with HIV has an HIV infection.** The required medical documentation may be submitted in the following forms: (a) copies of relevant portions of medical records, records maintained by a doctor, nurse, or other licensed health care provider, test results, prescription information, or other documentation possibly deemed credible by the Secretary (e.g., infusion logs and packing slips); or (b) an affidavit, signed under penalty of perjury, by a doctor or nurse practitioner, verifying that the medical criteria necessary for a petitioner to be eligible for payment under the Act are satisfied. The affidavit must include the doctor's or nurse practitioner's state and license number. This affidavit is contained in Appendix B. **Legal documentation**: A marriage certificate or other proof of a lawful marriage that shows that the lawful spouse with HIV and the individual with a blood-clotting disorder and HIV are married.

If you have any questions, go to the Ricky Ray web-site, www.hrsa.gov/bhpr/rickyray, or call the toll-free number, 1-888-496-0338.

CHECK BOX	CATEGORY OF ELIGIBILITY	REQUIRED DOCUMENTATION
	PERSONS WITH HIV *(Continued)*	
☐	**The former lawful spouse with HIV.** An HIV infected person who is the former lawful spouse of the individual with a blood-clotting disorder and HIV and (1) was the lawful spouse of the individual with a blood-clotting disorder and HIV at any time after the date of the individual's treatment with antihemophilic factor (this date of treatment must have been between July 1, 1982, and December 31, 1987), and (2) is no longer married	**Medical documentation showing that the individual with a blood-clotting disorder and HIV:** (1) has (or had) a blood-clotting disorder, such as hemophilia; (2) was treated with antihemophilic factor at any time between July 1, 1982, and December 31, 1987; and (3) has (or had) an HIV infection. **Medical documentation showing that the former lawful spouse with HIV:** (1) has an HIV infection; and (2) with reasonable certainty contracted HIV from the individual with a blood-clotting disorder and HIV. The required medical documentation may be submitted in the following forms: (a) copies of relevant portions of medical records, records maintained by a doctor, nurse, or other licensed health care provider, test results, prescription information, or other documentation possibly deemed credible by the Secretary (e.g., infusion logs and packing slips); or (b) an affidavit, signed under penalty of perjury, by a doctor or nurse practitioner, verifying that the medical criteria necessary for a petitioner to be eligible for payment under the Act are satisfied. The affidavit must include the doctor's or nurse practitioner's state and license number. The affidavit is contained in Appendix B. **Legal documentation:** (1) A marriage certificate or other proof of a lawful marriage, which shows that the former lawful spouse with HIV and the individual with a blood-clotting disorder and HIV were married at any time after the date of the individual's treatment with antihemophilic factor (this date of treatment must have been between July 1, 1982, and December 31, 1987); and (2) A divorce certificate or other proof of termination of the marriage.

If you have any questions, go to the Ricky Ray web-site, www.hrsa.gov/bhpr/rickyray, or call the toll-free number, 1-888-496-0338.

CHECK BOX	CATEGORY OF ELIGIBILITY	REQUIRED DOCUMENTATION
	PERSONS WITH HIV *(Continued)*	
☐	**The child with HIV** who acquired an HIV infection through perinatal transmission from a mother who is the individual with a blood-clotting disorder and HIV.	**Medical documentation showing that the individual with a blood-clotting disorder and HIV:** (1) has (or had) a blood-clotting disorder, such as hemophilia; (2) was treated with antihemophilic factor at any time between July 1, 1982, and December 31, 1987; and (3) has (or had) an HIV infection. **Medical documentation showing that the child with HIV**: (1) has an HIV infection; and (2) acquired an HIV infection through perinatal transmission from a birth mother who is the individual with a blood-clotting disorder and HIV. The required medical documentation may be submitted in the following forms: (a) copies of relevant portions of medical records, records maintained by a doctor, nurse, or other licensed health care provider, test results, prescription information, or other documentation possibly deemed credible by the Secretary (e.g., infusion logs and packing slips); or (b) an affidavit, signed under penalty of perjury, by a doctor or nurse practitioner, verifying that the medical criteria necessary for a petitioner to be eligible for payment under the Act are satisfied. The affidavit must include the doctor's or nurse practitioner's state and license number. The affidavit is contained in Appendix B. **Legal documentation:** A birth certificate or other proof showing that the child with HIV is the child of a mother, who is the individual with a blood-clotting disorder and HIV.

If you have any questions, go to the Ricky Ray web-site, www.hrsa.gov/bhpr/rickyray, or call the toll-free number, 1-888-496-0338.

CHECK BOX	CATEGORY OF ELIGIBILITY	REQUIRED DOCUMENTATION
	PERSONS WITH HIV *(Continued)*	
☐	**The child with HIV** who acquired an HIV infection through perinatal transmission from a mother who is the lawful spouse of an individual with a blood-clotting disorder and HIV.	**Medical documentation showing that the individual with a blood-clotting disorder and HIV:** (1) has (or had) a blood-clotting disorder, such as hemophilia; (2) was treated with antihemophilic factor at any time between July 1, 1982, and December 31, 1987; and (3) has (or had) an HIV infection. **Medical documentation showing that the child with HIV**: (1) has an HIV infection; (2) acquired an HIV infection through perinatal transmission from a birth mother who is the lawful spouse with HIV. The required medical documentation may be submitted in the following forms: (a) copies of relevant portions of medical records, records maintained by a doctor, nurse, or other licensed health care provider, test results, prescription information, or other documentation possibly deemed credible by the Secretary (e.g., infusion logs and packing slips); or (b) an affidavit, signed under penalty of perjury, by a doctor or nurse practitioner, verifying that the medical criteria necessary for a petitioner to be eligible for payment under the Act are satisfied. The affidavit must include the doctor's or nurse practitioner's state and license number. The affidavit is contained in Appendix B. **Legal documentation:** a) A birth certificate or other proof showing that the child with HIV is the child of the mother with HIV; and b) A marriage certificate or other proof showing that the father with the blood-clotting disorder and HIV and the mother with HIV were lawfully married.

If you have any questions, go to the Ricky Ray web-site, www.hrsa.gov/bhpr/rickyray, or call the toll-free number, 1-888-496-0338.

CHECK BOX	CATEGORY OF ELIGIBILITY	REQUIRED DOCUMENTATION
	PERSONS WITH HIV *(Continued)*	
☐	**The child with HIV** who acquired an HIV infection through perinatal transmission from a mother who is the former lawful spouse of an individual with a blood-clotting disorder and HIV.	**Medical documentation showing that the individual with a blood-clotting disorder and HIV:** (1) has (or had) a blood-clotting disorder, such as hemophilia; (2) was treated with antihemophilic factor at any time between July 1, 1982, and December 31, 1987; and (3) has (or had) an HIV infection. **Medical Documentation showing that the child with HIV**: (1) has an HIV infection; and (2) acquired an HIV infection through perinatal transmission from a birth mother who is/was the former lawful spouse with HIV. **Medical documentation showing that the mother with HIV**: with reasonable certainty contracted HIV from the individual with a blood-clotting disorder and HIV. The required medical documentation may be submitted in the following forms: (a) copies of relevant portions of medical records, records maintained by a doctor, nurse, or other licensed health care provider, test results, prescription information, or other documentation possibly deemed credible by the Secretary (e.g., infusion logs and packing slips); or (b) an affidavit, signed under penalty of perjury, by a doctor or nurse practitioner, verifying that the medical criteria necessary for a petitioner to be eligible for payment under the Act are satisfied. The affidavit must include the doctor's or nurse practitioner's state and license number. The affidavit is contained in Appendix B. **Legal documentation:** a) A birth certificate or other proof showing that the child with HIV is the child of the mother with HIV; and b) A marriage certificate or other proof showing that the man with the blood-clotting disorder and HIV and the mother with HIV were lawfully married.

If you have any questions, go to the Ricky Ray web-site, www.hrsa.gov/bhpr/rickyray, or call the toll-free number, 1-888-496-0338.

CHECK BOX	CATEGORY OF ELIGIBILITY	REQUIRED DOCUMENTATION
	2. SURVIVORS OF PERSONS WITH HIV	
☐	**Surviving spouse of a person with HIV.**	**All medical and legal documentation** required for the person with HIV (i.e., the individual with a blood-clotting disorder and HIV, the lawful spouse with HIV, the former lawful spouse with HIV, or the child with HIV), as described in Section 1 above. **Legal documentation**: (1) a death certificate for the person with HIV, or other evidence of that person's death; and (2) a marriage certificate or other proof of lawful marriage, which shows that you were the spouse of the person with HIV.
☐	**Surviving child or children of a person with HIV.**	**All medical and legal documentation** required for the person with HIV (i.e., the individual with a blood-clotting disorder and HIV, the lawful spouse with HIV, the former lawful spouse with HIV, or the child with HIV), as described in Section 1 above. **Legal documentation:** (1) a death certificate for the person with HIV, or other evidence of that person's death; and (2) a birth certificate, adoption certificate, documentation showing that you are the stepchild of the person with HIV (i.e., a certificate of marriage between your parent and the person with HIV), or other documentation showing that you are the child of the person with HIV.
☐	**Surviving parent or parents of a person with HIV.**	**All medical and legal documentation** required for the person with HIV (i.e., the individual with a blood-clotting disorder and HIV, the lawful spouse with HIV, the former lawful spouse with HIV, or the child with HIV), as described in Section 1 above. **Legal documentation:** (1) a death certificate for the person with HIV, or other evidence of that person's death; and (2) for each surviving parent, a birth certificate, adoption certificate, or other documentation which shows that you are the parent of the person with HIV.

If you have any questions, go to the Ricky Ray web-site, www.hrsa.gov/bhpr/rickyray, or call the toll-free number, 1-888-496-0338.

CHECK BOX	CATEGORY OF ELIGIBILITY	REQUIRED DOCUMENTATION
3. SURVIVORS FILING AN AMENDMENT TO A PRIOR PETITION		
☐	**Survivor or survivors of a person with HIV where the person with HIV filed a petition, but then died before receiving payment.**	**Legal documentation for spouse survivors:** (1) a death certificate for the person with HIV, or other evidence of that person's death; and (2) a marriage certificate or other proof of lawful marriage, which shows that you were the spouse of the person with HIV. **Legal documentation for child survivors:** (1) a death certificate for the person with HIV, or other evidence of that person's death; (2) for each surviving child, a birth certificate, adoption certificate, documentation that shows that you are the stepchild of the person with HIV (i.e., a certificate of marriage between your parent and the person with HIV), or other documentation which shows that you are the child of the person with HIV. **Legal documentation for parent survivors:** (1) a death certificate for the person with HIV, or other evidence of that person's death; and (2) for each surviving parent, a birth certificate, adoption certificate, or other documentation which shows that you are the parent of the person with HIV.

If you have any questions, go to the Ricky Ray web-site, www.hrsa.gov/bhpr/rickyray, or call the toll-free number, 1-888-496-0338.

CHECK BOX	CATEGORY OF ELIGIBILITY	REQUIRED DOCUMENTATION
	SURVIVORS FILING AN AMENDMENT TO A PRIOR PETITION *(Continued)*	
☐	**The next eligible survivor or survivors of a person with HIV where another survivor filed a petition or an amendment to a petition, but then died before receiving payment.**	**Legal documentation for spouse survivors:** (1) a death certificate for the person with HIV, or other evidence of that person's death; (2) a marriage certificate or other proof of lawful marriage, which shows that you were the spouse of the person with HIV; and (3) a death certificate for the person who was listed as a survivor on the original petition or amendment who has died, or other evidence of that person's death. **Legal documentation for child survivors:** (1) a death certificate for the person with HIV, or other evidence of that person's death; (2) for each surviving child, a birth certificate, adoption certificate, documentation that shows that you are the stepchild of the child with HIV (i.e., a certificate of marriage between your parent and the person with HIV), or other documentation which shows that you are the child of the person with HIV; and (3) a death certificate for the person who was listed as a survivor on the original petition or amendment who has died, or other evidence of that person's death. **Legal documentation for parent survivors:** (1) a death certificate for the person with HIV, or other evidence of that person's death; (2) for each surviving parent, a birth certificate, adoption certificate, or other documentation which shows that you are the parent(s) of the person with HIV; and (3) a death certificate for the person who was listed as a survivor on the original petition or amendment who has died, or other evidence of that person's death.
☐	**Survivor or survivors of a person with HIV where multiple surviving children or surviving parents filed a petition, but one of the survivors died before receiving payment.**	**Legal documentation:** A death certificate for the person who was listed as a survivor on the original petition or amendment who has died, or other evidence of that person's death.

If you have any questions, go to the Ricky Ray web-site, www.hrsa.gov/bhpr/rickyray, or call the toll-free number, 1-888-496-0338.

CHECK BOX	CATEGORY OF ELIGIBILITY	REQUIRED DOCUMENTATION
	4. PERSONAL REPRESENTATIVES	
☐	**Personal Representatives:** Personal representatives may file a petition for an individual who is eligible to receive payment under the Act: (1) where the eligible individual does not have the legal capacity to receive payment under the Act, as described in §130.35(e); or (2) where the eligible individual does have the capacity to receive payment under the Act, but only if the sworn statement included at the end of the petition is signed by the eligible individual.	**In all cases, the personal representative must submit all medical and legal documentation required for the eligible individual.** In those cases in which the eligible individual does not have the legal capacity to receive payment under the Act, a personal representative may receive payment for a legally incompetent individual by submitting the following written documentation: (1) proof showing the eligible individual does not have the legal capacity to receive payment under the Act (e.g., a birth certificate showing that the eligible individual is a minor or other evidence showing that the eligible individual is legally incompetent); and (2) proof showing that you have the authority to receive payment for the eligible individual (e.g., proof of legal guardianship).

If you have any questions, go to the Ricky Ray web-site, www.hrsa.gov/bhpr/rickyray, or call the toll-free number, 1-888-496-0338.

PARTS 131–135 [RESERVED]

SUBCHAPTER M—INDIAN HEALTH SERVICE, DEPARTMENT OF HEALTH AND HUMAN SERVICES

PART 136—INDIAN HEALTH

Subpart A—Purpose and Definitions

Sec.
136.1 Definitions.
136.2 Purpose of the regulations.
136.3 Administrative instructions.

Subpart B—What Services Are Available and Who Is Eligible To Receive Care

136.11 Services available.
136.12 Persons to whom services will be provided.
136.13 [Reserved]
136.14 Care and treatment of ineligible individuals.

Subpart C—Contract Health Services

136.21 Definitions.
136.22 Establishment of contract health service delivery areas.
136.23 Persons to whom contract health services will be provided.
136.24 Authorization for contract health services.
136.25 Reconsideration and appeals.

Subpart D—Limitation on Charges for Services Furnished by Medicare-Participating Hospitals to Indians

136.30 Payment to Medicare-participating hospitals for authorized Contract Health Services.
136.31 Authorization by urban Indian organization.
136.32 Disallowance.

Subpart E—Preference in Employment

136.41 Definitions.
136.42 Appointment actions.
136.43 Application procedure for preference eligibility.

Subpart F—Abortions and Related Medical Services in Indian Health Service Facilities and Indian Health Service Programs

136.51 Applicability.
136.52 Definitions.
136.53 General rule.
136.54 Life of the mother would be endangered.
136.55 Drugs and devices and termination of ectopic pregnancies.
136.56 Recordkeeping requirements.
136.57 Confidentiality.

Subpart G—Residual Status

136.61 Payor of last resort.

Subpart H—Grants for Development, Construction, and Operation of Facilities and Services

136.101 Applicability.
136.102 Definitions.
136.103 Eligibility.
136.104 Application.
136.105 Project elements.
136.106 Grant award and evaluation.
136.107 Use of project funds.
136.108 [Reserved]
136.109 Availability of appropriations.
136.110 Facilities construction.
136.111 Interest.
136.112 Additional conditions.
136.113 Fair and uniform provision of services.
136.114 Applicability of other Department regulations.
136.115 Rescission of grants.
136.116 Reports.
136.117 Amendment of regulations.
136.118 Effect on existing rights.
136.119 Penalties.
136.120 Use of Indian business concerns.
136.121 Indian preference in training and employment.

Subpart I [Reserved]

Subpart J—Indian Health Care Improvement Act Programs

SUBDIVISION J–1—PROVISIONS OF GENERAL AND SPECIAL APPLICABILITY

136.301 Policy and applicability.
136.302 Definitions.
136.303 Indians applying for scholarships.
136.304 Publication of a list of allied health professions.
136.305 Additional conditions.

SUBDIVISION J–2—HEALTH PROFESSIONS RECRUITMENT PROGRAM FOR INDIANS

136.310 Health professions recruitment grants.
136.311 Eligibility.
136.312 Application.
136.313 Evaluation and grant awards.
136.314 Use of funds.
136.315 Publication of list of grantees and projects.
136.316 Other HHS regulations that apply.

SUBDIVISION J–3—HEALTH PROFESSIONS PREPARATORY SCHOLARSHIP PROGRAM FOR INDIANS

136.320 Preparatory scholarship grants.
136.321 Eligibility.
136.322 Application and selection.
136.323 Scholarship and tuition.
136.324 Availability of list of recipients.

SUBDIVISION J–4—INDIAN HEALTH SCHOLARSHIP PROGRAM

136.330 Indian health scholarships.
136.331 Selection.
136.332 Service obligation.
136.333 Distribution of scholarships.
136.334 Publication of a list of recipients.

SUBDIVISION J–5—CONTINUING EDUCATION ALLOWANCES

136.340 Provision of continuing education allowances.

SUBDIVISION J–6—CONTRACTS WITH URBAN INDIAN ORGANIZATIONS

136.350 Contracts with Urban Indian organizations.
136.351 Application and selection.
136.352 Fair and uniform provision of services.
136.353 Reports and records.

SUBDIVISION J–7—LEASES WITH INDIAN TRIBES

136.360 Leases with Indian tribes.

SUBDIVISION J–8—HEALTH PROFESSIONS PREGRADUATE SCHOLARSHIP PROGRAM FOR INDIANS

136.370 Pregraduate scholarship grants.
136.371 Eligibility.
136.372 Application and selection.
136.373 Scholarship and tuition.
136.374 Availability of list of recipients.

Subpart K—Indian Child Protection and Family Violence Prevention

136.401 Purpose.
136.402 Policy.
136.403 Definitions.
136.404 What does the Indian Child Protection and Family Violence Prevention Act require of the Indian Health Service and Indian Tribes or Tribal organizations receiving funds under the ISDEA?
136.405 What are the minimum standards of character for individuals placed in, or applying for, a position that involves regular contact with or control over Indian children?
136.406 Under what circumstances will the minimum standards of character be considered to be met?
136.407 Under what circumstances should a conviction, or plea of nolo contendere or guilty to, be considered if there has been a pardon, expungement, set aside, or other court order of the conviction or plea?
136.408 What are other factors, in addition to the minimum standards of character, that may be considered in determining placement of an individual in a position that involves regular contact with or control over Indian children?
136.409 What positions require a background investigation and determination of eligibility for employment or retention?
136.410 Who conducts the background investigation and prepares determinations of eligibility for employment?
136.411 Are the requirements for Indian Health Service adjudication different from the requirements for Indian Tribes and Tribal organizations?
136.412 What questions must the IHS ask as part of the background investigation?
136.413 What protections must the IHS and Tribes or Tribal organizations provide to individuals undergoing a background investigation?
136.414 How does the IHS determine eligibility for placement or retention of individuals in positions involving regular contact with Indian children?
136.415 What rights does an individual have during this process?
136.416 When should the IHS deny employment or dismiss an employee?
136.417 May the IHS hire individuals pending completion of a background investigation?
136.418 What should the IHS do if an individual has been charged with an offense but the charge is pending or no disposition has been made by a court?

AUTHORITY: 25 U.S.C. 13; sec. 3, 68 Stat. 674 (42 U.S.C., 2001, 2003); Sec. 1, 42 Stat. 208 (25 U.S.C. 13); 42 U.S.C. 2001, unless otherwise noted.

Subpart A—Purpose and Definitions

SOURCE: 64 FR 58319, Oct. 28, 1999, unless otherwise noted. Redesignated at 67 FR 35342, May 17, 2002

§ 136.1 Definitions.

When used in this part:

Bureau of Indian Affairs (BIA) means the Bureau of Indian Affairs, Department of the Interior.

Indian includes Indians in the Continental United States, and Indians, Aleuts and Eskimos in Alaska.

Indian health program means the health services program for Indians administered by the Indian Health Service within the Department of Health and Human Services.

Jurisdiction has the same geographical meaning as in Bureau of Indian Affairs usage.

Service means the Indian Health Service.

§ 136.2 Purpose of the regulations.

The regulations in this part establish general principles and program requirements for carrying out the Indian health programs.

§ 136.3 Administrative instructions.

The service periodically issues administrative instructions to its officers and employees, which are primarily found in the *Indian Health Service Manual* and the Area Office and program office supplements. These instructions are operating procedures to assist officers and employees in carrying out their responsibilities, and are not regulations establishing program requirements which are binding upon members of the general public.

Subpart B—What Services Are Available and Who Is Eligible To Receive Care?

SOURCE: 64 FR 58319, Oct. 28, 1999, unless otherwise noted. Redesignated at 67 FR 35342, May 17, 2002.

§ 136.11 Services available.

(a) *Type of services that may be available.* Services for the Indian community served by the local facilities and program may include hospital and medical care, dental care, public health nursing and preventive care (including immunizations), and health examination of special groups such as school children.

(b) *Where services are available.* Available services will be provided at hospitals and clinics of the Service, and at contract facilities (including tribal facilities under contract with the Service).

(c) *Determination of what services are available.* The Service does not provide the same health services in each area served. The services provided to any particular Indian community will depend upon the facilities and services available from sources other than the Service and the financial and personnel resources made available to the Service.

§ 136.12 Persons to whom services will be provided.

(a) *In general.* Services will be made available, as medically indicated, to persons of Indian descent belonging to the Indian community served by the local facilities and program. Services will also be made available, as medically indicated, to a non-Indian woman pregnant with an eligible Indian's child but only during the period of her pregnancy through postpartum (generally about 6 weeks after delivery). In cases where the woman is not married to the eligible Indian under applicable state or tribal law, paternity must be acknowledged in writing by the Indian or determined by order of a court of competent jurisdiction. The Service will also provide medically indicated services to non-Indian members of an eligible Indian's household if the medical officer in charge determines that this is necessary to control acute infectious disease or a public health hazard.

(2) Generally, an individual may be regarded as within the scope of the Indian health and medical service program if he/she is regarded as an Indian by the community in which he/she lives as evidenced by such factors as tribal membership, enrollment, residence on tax-exempt land, ownership of restricted property, active participation in tribal affairs, or other relevant factors in keeping with general Bureau of Indian Affairs practices in the jurisdiction.

(b) *Doubtful cases.* (1) In case of doubt as to whether an individual applying for care is within the scope of the program, the medical officer in charge shall obtain from the appropriate BIA officials in the jurisdiction information that is pertinent to his/her determination of the individual's continuing relationship to the Indian population group served by the local program.

(2) If the applicant's condition is such that immediate care and treatment are necessary, services shall be provided

pending identification as an Indian beneficiary.

(c) *Priorities when funds, facilities, or personnel are insufficient to provide the indicated volume of services.* Priorities for care and treatment, as among individuals who are within the scope of the program, will be determined on the basis of relative medical need and access to other arrangements for obtaining the necessary care.

§ 136.13 [Reserved]

§ 136.14 Care and treatment of ineligible individuals.

(a) In case of an emergency, as an act of humanity, individuals not eligible under § 136.12 may be provided temporary care and treatment in Service facilities.

(b) Charging ineligible individuals. Where the Service Unit Director determines that an ineligible individual is able to defray the cost of care and treatment, the individual shall be charged at rates approved by the Assistant Secretary for Health and Surgeon General published in the FEDERAL REGISTER. Reimbursement from third-party payors may be arranged by the patient or by the Service on behalf of the patient.

[64 FR 58319, Oct. 28, 1999. Redesignated and amended at 67 FR 35342, May 17, 2002]

Subpart C—Contract Health Services

SOURCE: 64 FR 58320, Oct. 28, 1999, unless otherwise noted. Redesignated at 67 FR 35342, May 17, 2002.

§ 136.21 Definitions.

(a) *Alternate resources* is defined in § 136.61 of subpart G of this part.

(b) *Appropriate ordering official* means, unless otherwise specified by contract with the health care facility or provider, the ordering official for the contract health service delivery area in which the individual requesting contract health services or on whose behalf the services are requested, resides.

(c) *Area Director* means the Director of an Indian Health Service Area designated for purposes of administration of Indian Health Service programs.

(d) *Contract health service delivery area means* the geographic area within which contract health services will be made available by the IHS to members of an identified Indian community who reside in the area, subject to the provisions of this subpart.

(e) *Contract health services* means health services provided at the expense of the Indian Health Service from public or private medical or hospital facilities other than those of the Service.

(f) *Emergency* means any medical condition for which immediate medical attention is necessary to prevent the death or serious impairment of the health of an individual.

(g) *Indian tribe* means any Indian tribe, band, nation, group, Pueblo, or community, including any Alaska Native village or Native group, which is federally recognized as eligible for the special programs and services provided by the United States to Indians because of their status as Indians.

(h) *Program Director* means the Director of an Indian Health Service ''program area'' designated for the purposes of administration of Indian Health Service programs.

(i) *Reservation* means any federally recognized Indian tribe's reservation. Pueblo, or colony, including former reservations in Oklahoma, Alaska Native regions established pursuant to the Alaska Native Claims Settlement Act (43 U.S.C. 1601 *et seq.*), and Indian allotments.

(j) *Secretary* means the Secretary of Health and Human Services to whom the authority involved has been delegated.

(k) *Service* means the Indian Health Service.

(l) *Service Unit Director* means the Director of an Indian Health Service ''Service unit area'' designated for purposes of administration of Indian Health Service programs.

[64 FR 58320, Oct. 28, 1999. Redesignated and amended at 67 FR 35342, May 17, 2002]

§ 136.22 Establishment of contract health service delivery areas.

(a) In accordance with the congressional intention that funds appropriated for the general support of the health program of the Indian Health

Service be used to provide health services for Indians who live on or near Indian reservations, contract health service delivery areas are established as follows:

(1) The State of Alaska;

(2) The State of Nevada;

(3) the State of Oklahoma;

(4) Chippewa, Mackinac, Luce, Alger, Schoolcraft, Delta, and Marquette Counties in the State of Michigan;

(5) Clark, Eau Claire, Jackson, La Crosse, Monroe, Vernon, Crawford, Shawano, Marathon, Wood, Juneau, Adams, Columbia, and Sauk Counties in the State of Wisconsin and Houston County in the State of Minnesota;

(6) With respect to all other reservations within the funded scope of the Indian health program, the contract health services delivery area shall consist of a county which includes all or part of a reservation, and any county or counties which have a common boundary with the reservation.

(b) The Secretary may from time to time, redesignate areas or communities within the United States as appropriate for inclusion or exclusion from a contract health service delivery area after consultation with the tribal governing body or bodies on those reservations included within the contract health service delivery area. The Secretary will take the following criteria into consideration:

(1) The number of Indians residing in the area proposed to be so included or excluded;

(2) Whether the tribal governing body has determined that Indians residing in the area near the reservation are socially and economically affiliated with the tribe;

(3) The geographic proximity to the reservation of the area whose inclusion or exclusion is being considered; and

(4) The level of funding which would be available for the provision of contract health services.

(c) Any redesignation under paragraph (b) of this section shall be made in accordance with the procedures of the Administrative Procedure Act (5 U.S.C. 553).

§ 136.23 Persons to whom contract health services will be provided.

(a) *In general.* To the extent that resources permit, and subject to the provisions of this subpart, contract health services will be made available as medically indicated, when necessary health services by an Indian Health Service facility are not reasonably accessible or available, to persons described in and in accordance with § 136.12 of this part if those persons:

(1) Reside within the United States and on a reservation located within a contract health service delivery area; or

(2) Do not reside on a reservation but reside within a contract health service delivery area and:

(i) Are members of the tribe or tribes located on that reservation or of the tribe or tribes for which the reservation was established; or

(ii) Maintain close economic and social ties with that tribe or tribes.

(b) *Students and transients.* Subject to the provisions of this subpart, contract health services will be made available to students and transients who would be eligible for contract health services at the place of their permanent residence within a contract health service delivery area, but are temporarily absent from their residence as follows:

(1) Student—during their full-time attendance at programs of vocational, technical, or academic education, including normal school breaks (such as vacations, semester or other scheduled breaks occurring during their attendance) and for a period not to exceed 180 days after the completion of the course of study.

(2) Transients (persons who are in travel or are temporarily employed, such as seasonal or migratory workers) during their absence.

(c) *Other persons outside the contract health service delivery area.* Persons who leave the contract health service delivery area in which they are eligible for contract health service and are neither students nor transients will be eligible for contract health service for a period not to exceed 180 days from such departure.

(d) *Foster children.* Indian children who are placed in foster care outside a contract health service delivery area

by order of a court of competent jurisdiction and who were eligible for contract health services at the time of the court order shall continue to be eligible for contract health services while in foster care.

(e) *Priorities for contract health services.* When funds are insufficient to provide the volume of contract health services indicated as needed by the population residing in a contract health service delivery area, priorities for service shall be determined on the basis of relative medical need.

(f) *Alternate resources.* The term ''alternate resources'' is defined in § 136.61(c) of subpart G of this part.

[64 FR 58319, Oct. 28, 1999. Redesignated and amended at 67 FR 35342, May 17, 2002]

§ 136.24 Authorization for contract health services.

(a) No payment will be made for medical care and services obtained from non-Service providers or in non-Service facilities unless the applicable requirements of paragraphs (b) and (c) of this section have been met and a purchase order for the care and services has been issued by the appropriate ordering official to the medical care provider.

(b) In nonemergency cases, a sick or disabled Indian, an individual or agency acting on behalf of the Indian, or the medical care provider shall, prior to the provision of medical care and services notify the appropriate ordering official of the need for services and supply information that the ordering official deems necessary to determine the relative medical need for the services and the individual's eligibility. The requirement for notice prior to providing medical care and services under this paragraph may be waived by the ordering official if:

(1) Such notice and information are provided within 72 hours after the beginning of treatment or admission to a health care facility; and

(2) The ordering official determines that giving of notice prior to obtaining the medical care and services was impracticable or that other good cause exists for the failure to provide prior notice.

(c) In emergency cases, a sick or disabled Indian, or an individual or agency acting on behalf of the Indian, or the medical care provider shall within 72 hours after the beginning of treatment for the condition or after admission to a health care facility notify the appropriate ordering official of the fact of the admission or treatment, together with information necessary to determine the relative medical need for the services and the eligibility of the Indian for the services. The 72-hour period may be extended if the ordering official determines that notification within the prescribed period was impracticable or that other good cause exists for the failure to comply.

§ 136.25 Reconsideration and appeals.

(a) Any person to whom contract health services are denied shall be notified of the denial in writing together with a statement of the reason for the denial. The notice shall advise the applicant for contract health services that within 30 days from the receipt of the notice the applicant:

(1) May obtain a reconsideration by the appropriate Service Unit Director of the original denial if the applicant submits additional supporting information not previously submitted; or

(2) If no additional information is submitted, may appeal the original denial by the Service Unit Director to the appropriate Area or program director. A request for reconsideration or appeal shall be in writing and shall set forth the grounds supporting the request or appeal.

(b) If the original decision is affirmed on reconsideration, the applicant shall be so notified in writing and advised that an appeal may be taken to the Area or program director within 30 days of receipt of the notice of the reconsidered decision. The appeal shall be in writing and shall set forth the grounds supporting the appeal.

(c) If the original or reconsidered decision is affirmed on appeal by the Area or program director, the applicant shall be so notified in writing and advised that a further appeal may be taken to the Director, Indian Health Service, within 30 days of receipt of the notice. The appeal shall be in writing and shall set the grounds supporting the appeal. The decision of the Director, Indian Health Service, shall constitute final administrative action.

Subpart D—Limitation on Charges for Services Furnished by Medicare-Participating Hospitals to Indians

SOURCE: 72 FR 30710, June 4, 2007, unless otherwise noted.

§ 136.30 Payment to Medicare-participating hospitals for authorized Contract Health Services.

(a) *Scope*. All Medicare-participating hospitals, which are defined for purposes of this subpart to include all departments and provider-based facilities of hospitals (as defined in sections 1861(e) and (f) of the Social Security Act) and critical access hospitals (as defined in section 1861(mm)(1) of the Social Security Act), that furnish inpatient services must accept no more than the rates of payment under the methodology described in this section as payment in full for all items and services authorized by IHS, Tribal, and urban Indian organization entities, as described in paragraph (b) of this section.

(b) *Applicability*. The payment methodology under this section applies to all levels of care furnished by a Medicare-participating hospital, whether provided as inpatient, outpatient, skilled nursing facility care, as other services of a department, subunit, distinct part, or other component of a hospital (including services furnished directly by the hospital or under arrangements) that is authorized under part 136, subpart C by a contract health service (CHS) program of the Indian Health Service (IHS); or authorized by a Tribe or Tribal organization carrying out a CHS program of the IHS under the Indian Self-Determination and Education Assistance Act, as amended, Pub. L. 93–638, 25 U.S.C. 450 *et seq.*; or authorized for purchase under § 136.31 by an urban Indian organization (as that term is defined in 25 U.S.C. 1603(h)) (hereafter ''I/T/U'').

(c) *Basic determination*. (1) Payment for hospital services that the Medicare program would pay under a prospective payment system (PPS) will be based on that PPS. For example, payment for inpatient hospital services shall be made per discharge based on the applicable PPS used by the Medicare program to pay for similar hospital services under 42 CFR part 412. Payment for outpatient hospital services shall be made based on a PPS used in the Medicare program to pay for similar hospital services under 42 CFR part 419. Payment for skilled nursing facility (SNF) services shall be based on a PPS used in the Medicare program to pay for similar SNF services under 42 CFR part 413.

(2) For Medicare participating hospitals that furnish inpatient services but are exempt from PPS and receive reimbursement based on reasonable costs (for example, critical access hospitals (CAHs), children's hospitals, cancer hospitals, and certain other hospitals reimbursed by Medicare under special arrangements), including provider subunits exempt from PPS, payment shall be made per discharge based on the reasonable cost methods established under 42 CFR part 413, except that the interim payment rate under 42 CFR part 413, subpart E shall constitute payment in full for authorized charges.

(d) *Other payments*. In addition to the amount payable under paragraph (c)(1) of this section for authorized inpatient services, payments shall include an amount to cover: The organ acquisition costs incurred by hospitals with approved transplantation centers; direct medical education costs; units of blood clotting factor furnished to an eligible patient who is a hemophiliac; and the costs of qualified non-physician anesthetists, to the extent such costs would be payable if the services had been covered by Medicare. Payment under this subsection shall be made on a per discharge basis and will be based on standard payments established by the Centers for Medicare & Medicaid Services (CMS) or its fiscal intermediaries.

(e) *Basic payment calculation*. The calculation of the payment by I/T/Us will be based on determinations made under paragraphs (c) and (d) of this section consistent with CMS instructions to its fiscal intermediaries at the time the claim is processed. Adjustments will be made to correct billing or claims processing errors, including when fraud is detected. I/T/Us shall pay the providing hospital the full PPS based rate, or the interim reasonable cost rate, without

reduction for any co-payments, coinsurance, and deductibles required by the Medicare program from the patient.

(f) *Exceptions to payment calculation.* Notwithstanding paragraph (e) of this section, if an amount has been negotiated with the hospital or its agent by the I/T/U, the I/T/U will pay the lesser of: The amount determined under paragraph (e) of this section or the amount negotiated with the hospital or its agent, including but not limited to capitated contracts or contracts per Federal law requirements;

(g) *Coordination of benefits and limitation on recovery.* If an I/T/U has authorized payment for items and services provided to an individual who is eligible for benefits under Medicare, Medicaid, or another third party payor—

(1) The I/T/U shall be the payor of last resort under § 136.61;

(2) If there are any third party payers, the I/T/U will pay the amount for which the patient is being held responsible after the provider of services has coordinated benefits and all other alternative resources have been considered and paid, including applicable copayments, deductibles, and coinsurance that are owed by the patient; and

(3) The maximum payment by the I/T/U will be only that portion of the payment amount determined under this section not covered by any other payor; and

(4) The I/T/U payment will not exceed the rate calculated in accordance with paragraph (e) of this section or the contracted amount (plus applicable cost sharing), whichever is less; and

(5) When payment is made by Medicaid it is considered payment in full and there will be no additional payment made by the I/T/U to the amount paid by Medicaid (except for applicable cost sharing).

(h) *Claims processing.* For a hospital to be eligible for payment under this section, the hospital or its agent must submit the claim for authorized services—

(1) On a UB92 paper claim form (until abolished, or on an officially adopted successor form) or the HIPAA 837 electronic claims format ANSI X12N, version 4010A1 (until abolished, or on an officially adopted successor form) and include the hospital's Medicare provider number/National Provider Identifier; and

(2) To the I/T/U, agent, or fiscal intermediary identified by the I/T/U in the agreement between the I/T/U and the hospital or in the authorization for services provided by the I/T/U; and

(3) Within a time period equivalent to the timely filing period for Medicare claims under 42 CFR 424.44 and provisions of the Medicare Claims Processing Manual applicable to the type of item or service provided.

(i) *Authorized services.* Payment shall be made only for those items and services authorized by an I/T/U consistent with part 136 of this title or section 503(a) of the Indian Health Care Improvement Act (IHCIA), Public Law 94–437, as amended, 25 U.S.C. 1653(a).

(j) *No additional charges.* A payment made in accordance with this section shall constitute payment in full and the hospital or its agent may not impose any additional charge—

(1) On the individual for I/T/U authorized items and services; or

(2) For information requested by the I/T/U or its agent or fiscal intermediary for the purposes of payment determinations or quality assurance.

§ 136.31 Authorization by urban Indian organization.

An urban Indian organization may authorize for purchase items and services for an eligible urban Indian (as those terms are defined in 25 U.S.C. 1603(f) and (h)) according to section 503 of the IHCIA and applicable regulations. Services and items furnished by Medicare-participating inpatient hospitals shall be subject to the payment methodology set forth in § 136.30.

§ 136.32 Disallowance.

(a) If it is determined that a hospital has submitted inaccurate information for payment, such as admission, discharge or billing data, an I/T/U may as appropriate—

(1) Deny payment (in whole or in part) with respect to any such services, and;

(2) Disallow costs previously paid, including any payments made under any methodology authorized under this subpart. The recovery of payments

made in error may be taken by any method authorized by law.

(b) For cost based payments previously issued under this subpart, if it is determined that actual costs fall significantly below the computed rate actually paid, the computed rate may be retrospectively adjusted. The recovery of overpayments made as a result of the adjusted rate may be taken by any method authorized by law.

Subpart E—Preference in Employment

AUTHORITY: 25 U.S.C. 44, 45, 46 and 472; Pub. L. 83–568, 68 Stat 674, 42 U.S.C. 2003.

SOURCE: 64 FR 58321, Oct. 28, 1999, unless otherwise noted. Redesignated at 67 FR 35342, May 17, 2002.

§ 136.41 Definitions.

For purposes of making appointments to vacancies in all positions in the Indian Health Service, a preference will be extended to persons of Indian descent who are:

(a) Members of any recognized Indian tribe now under Federal jurisdiction;

(b) Descendants of such members who were, on June 1, 1934, residing within the present boundaries of any Indian reservation;

(c) All others of one-half or more Indian blood of tribes indigenous to the United States;

(d) Eskimos and other aboriginal people of Alaska; or

(e) Until January 4, 1990, or until the Osage Tribe has formally organized, whichever comes first, a person of at least one-quarter degree Indian ancestry of the Osage Tribe of Indians, whose rolls were closed by an act of Congress.

§ 136.42 Appointment actions.

(a) Preference will be afforded a person meeting any one of the definitions of § 136.41 whether the placement in the position involves initial appointment, reappointment, reinstatement, transfer, reassignment, promotion, or any other personnel action intended to fill a vacancy.

(b) Preference eligibles may be given a schedule A excepted appointment under 5 CFR 213.3116(b)(8). If the individuals are within reach on a Civil Service Register, they may be given a competitive appointment.

[64 FR 58321, Oct. 28, 1999. Redesignated and amended at 67 35342, May 17, 2002]

§ 136.43 Application procedure for preference eligibility.

To be considered a preference eligible, the person must submit with the employment application a Bureau of Indian Affairs certification that the person is an Indian as defined by § 136.41 except that an employee of the Indian Health Service who has a certificate of preference eligibility on file in the Official Personnel Folder is not required to resubmit such proof but may instead include a statement on the application that proof of eligibility is on file in the Official Personnel Folder.

[64 FR 58319, Oct. 28, 1999. Redesignated and amended at 67 35342, May 17, 2002]

Subpart F—Abortions and Related Medical Services in Indian Health Service Facilities and Indian Health Service Programs

AUTHORITY: Sec. 1, 42 Stat. 208, (25 U.S.C. 13); sec. 1, Stat. 674, (42 U.S.C. 2001); sec. 3, 68 Stat. 674, (42 U.S.C. 2003).

SOURCE: 64 FR 58322, Oct. 28, 1999, unless otherwise noted. Redesignated at 67 FR 35342, May 17, 2002.

§ 136.51 Applicability.

This subpart is applicable to the use of Federal funds in providing health services to Indians in accordance with the provisions of subparts A, B, and C of this part.

§ 136.52 Definitions.

As used in this subpart:

Physician means a doctor of medicine or osteopathy legally authorized to practice medicine and surgery at an Indian Health Service or tribally run facility, or by the state in which he or she practices.

§ 136.53 General rule.

Federal funds may not be used to pay for or otherwise provide for abortions

in the programs described in § 136.51, except under the circumstances described in § 136.54.

[64 FR 58322, Oct. 28, 1999. Redesignated and amended at 67 35342, May 17, 2002]

§ 136.54 Life of the mother would be endangered.

Federal funds are available for an abortion when a physician has found and so certified in writing to the appropriate tribal or other contracting organization, or Service Unit or Area Director, that ''on the basis of my professional judgment the life of the mother would be endangered if the fetus were carried to term.'' The certification must contain the name and address of the patient.

§ 136.55 Drugs and devices and termination of ectopic pregnancies.

Federal funds are available for drugs or devices to prevent implantation of the fertilized ovum, and for medical procedures necessary for the termination of an ectopic pregnancy.

§ 136.56 Recordkeeping requirements.

Documents required by § 136.54 must be maintained for three years pursuant to the retention and custodial requirements for records at 45 CFR part 74, subpart C.

[64 FR 58322, Oct. 28, 1999. Redesignated and amended at 67 35342, May 17, 2002]

§ 136.57 Confidentiality.

Information which is acquired in connection with the requirements of this subpart may not be disclosed in a form which permits the identification of an individual without the individual's consent, except as may be necessary for the health of the individual or as may be necessary for the Secretary to monitor Indian Health Service program activities. In any event, any disclosure shall be subject to appropriate safeguards which will minimize the likelihood of disclosures of personal information in identifiable form.

Subpart G—Residual Status

§ 136.61 Payor of last resort.

(a) The Indian Health Service is the payor of last resort for persons defined as eligible for contract health services under the regulations in this part, notwithstanding any State or local law or regulation to the contrary.

(b) Accordingly, the Indian Health Service will not be responsible for or authorize payment for contract health services to the extent that:

(1) The Indian is eligible for alternate resources, as defined in paragraph (c) of this section, or

(2) The Indian would be eligible for alternate resources if he or she were to apply for them, or

(3) The Indian would be eligible for alternate resources under State or local law or regulation but for the Indian's eligibility for contract health services, or other health services, from the Indian Health Service or Indian Health Service funded programs.

(c) *Alternate resources* means health care resources other than those of the Indian Health Service. Such resources include health care providers and institutions, and health care programs for the payment of health services including but not limited to programs under titles XVIII or XIX of the Social Security Act (*i.e.*, Medicare, Medicaid), State or local health care programs, and private insurance.

[64 FR 58322, Oct. 28, 1999]

Subpart H—Grants for Development, Construction, and Operation of Facilities and Services

AUTHORITY: Secs. 104, 107, 25 U.S.C. 450h(b), 450k; Sec. 3, Pub. L. 83–568, 42 U.S.C. 2003.

SOURCE: 40 FR 53143, Nov. 14, 1975, unless otherwise noted. Redesignated at 67 FR 35342, May 17, 2002.

§ 136.101 Applicability.

The regulations of this subpart are applicable to grants awarded pursuant to section 104(b) of Pub. L. 93–638, 25 U.S.C. 450h(b) for (a) projects for development including feasibility studies, construction, operation, provision, or maintenance of services and facilities provided to Indians and, (b) for projects for planning, training, evaluation or other activities designed to improve the capacity of a tribal organization to

enter into a contract or contracts pursuant to section 103 of the Act. Such grants may include the cost of training personnel to perform grant related activities.

§ 136.102 Definitions.

As used in this subpart:

(a) *Act* means Title I of the Indian Self-Determination and Education Assistance Act, Pub. L. 93–638 (88 Stat. 2203).

(b) *Indian* means a person who is a member of an Indian tribe.

(c) *Indian tribe* means any Indian tribe, band, nation, rancheria, Pueblo, colony or community, including any Alaska Native Village or regional or village corporation as defined in or established pursuant to the Alaska Native Claims Settlement Act, Pub. L. 92–203 (85 Stat. 688 which is recognized as eligible by the United States Government for the special programs and services provided by the United States to Indians because of their status as Indians.

(d) *Tribal organization* means:

(1) The recognized governing body of any Indian tribe; or

(2) Any legally established organization of Indians which is:

(i) Controlled, sanctioned or chartered by such governing body or bodies; or

(ii) Democratically elected by the adult members of the Indian community to be served by such organization and which includes the maximum participation of Indians in all phases of its activities.

(e) *Secretary* means the Secretary of the Department of Health and Human Services and any other officer or employee of the Department of Health and Human Services to whom the authority involved has been delegated.

(f) *Grantee* means the tribe or tribal organization that receives a grant under section 104(b) of the Act and this subpart and assumes the legal and financial responsibility for the funds awarded and for the performance of the grant supported activity in accordance with the Act and these regulations.

(g) *Indian owned economic enterprise* means any commercial, industrial, or business activity established or organized for the purpose of profit which is not less than 51 percent Indian owned.

§ 136.103 Eligibility.

Any Indian tribe or tribal organization is eligible to apply for a grant under this subpart.

§ 136.104 Application.

(a) Forms for applying for grants are governed by 45 CFR part 74, subpart N.

(b) In addition to such other pertinent information as the Secretary may require, the application for a grant under this subpart shall contain the following:

(1) A description of the applicant including an indication whether the applicant is a Tribe or tribal organization, and if the latter:

(i) The legal and organizational relationship of the applicant to the Indians in the Area to be served or effected by the project.

(ii) A description of the current and proposed participation of Indians in the activities of applicant.

(iii) Whether applicant is controlled, sanctioned or chartered by the governing body of the Indians to be served, and if so, evidence of such fact.

(iv) If elected, a description of the election process, voting criteria, and extent of voter participation in the election designating the organization.

(2) A narrative description of the project including its goals and objectives and the manner in which the proposed project is compatible with published Indian Health Service statements of availability of funds, the manner in which those goals and objectives are to be attained, and a work and time schedule which will be utilized to accomplish each goal and objective.

(3) A description of applicant's staff, present or proposed, including their qualifications, academic training, responsibilities and functions.

(4) A description of the manner in which the staff is or will be organized and supervised to carry out proposed activities.

(5) A description of training to be provided as part of the proposed project.

(6) A description of the administrative, managerial, and organizational

arrangements and resources to be utilized to conduct the proposed project.

(7) An itemized budget for the budget period (normally 12 months) for which support is sought and justification of the amount of grant funds requested.

(8) The intended financial participation, if any, of the applicant, specifying the type of contributions such as cash or services, loans of full or part-time staff, equipment, space materials or facilities, or other contributions.

(9) Where health services are to be provided, a description of the nature of the services to be provided and the population to be served.

(10) A description of the Federal property, real and personal, equipment, facilities and personnel which applicant proposes to utilize and a description of the arrangements which applicant has made or will make to assume responsibility for the operation and management of those facilities.

(c) The application shall contain assurances satisfactory to the Secretary that the applicant will:

(1) Where applicant is providing services, provide such services at a level and range which is not less than that provided by the Indian Health Service or that identified by the Service after negotiation with the applicant, as an appropriate level, range and standard of care.

(2) Where providing services, provide services in accordance with law and applicable Indian Health Service policies and regulations.

(3) Where providing services, provide services in a fair and uniform manner, consistent with medical need, to all Indian people.

(Approved by the Office of Management and Budget under control number 0915–0045)

[40 FR 53143, Nov. 14, 1975, as amended at 50 FR 1853, Jan. 14, 1985]

§ 136.105 Project elements.

A project supported under this subpart must:

(a) Have sufficient, adequately trained staff in relation to the scope of the project.

(b) Maintain a mechanism for dealing with complaints regarding the delivery of health services or performance of project activities.

(c) Hold confidential all information obtained by the personnel of the project from participants in the project related to their examination, care, and treatment, and shall not release such information without the individuals' consent except as may be required by law, as may be necessary to provide service to the individual, or as may be necessary to monitor the operations of this program or otherwise protect the public health. Information may be disclosed in a form which does not identify particular individuals.

(d) Operate with the approval, support, and involvement of the tribe, tribes, or Indian communities in the area served by the local facility and program.

(e) Keep in force adequate liability insurance in accordance with the approved application unless the Secretary, for good cause shown, has determined that such insurance was not obtainable or appropriate or has determined that such insurance may be permitted to expire or lapse. The insurance shall provide that prior to cancellation the Secretary must be notified and must further provide that for each such policy of insurance the carrier shall waive any right it may have to raise as a defense the tribe's sovereign immunity from suit but such waiver shall extend only to claims the amount and nature of which are within the coverage and limits of the policy and shall not authorize or empower the insurance carrier to waive or otherwise limit the tribe's sovereign immunity outside or beyond the coverage and limits of the policy of insurance.

NOTE: This provision is excepted from application of 45 CFR 74.15 by section 103(c) of Pub. L. 93–638.

(f) Provide services at a level and range which is not less than that provided by the Indian Health Service or that identified by the Service as an appropriate level, range, and standard of care.

[40 FR 53143, Nov. 14, 1975, as amended at 50 FR 1854, Jan. 14, 1985]

§ 136.106 Grant award and evaluation.

(a) Within the limits of funds determined by the Secretary to be available for such purpose, the Secretary may

award grants under this subpart to applicants whose project will, in the judgment of the Secretary, best promote the purposes of the Act, and the regulations of this subpart, taking into account:

(1) The apparent capability of the applicant to organize and manage the proposed project successfully considering, among other things the adequacy of staff, management systems, equipment and facilities.

(2) The soundness of the applicant's plan for conducting the project and for assuring effective utilization of grant funds.

(3) The adequacy of the budget in relation to the scope of the project and available funds.

(4) The relative effectiveness of the applicant's plan, as set forth in the application, to carry out each of the requirements § 136.105.

(5) The compatibility of the proposed project with the published goals and responsibilities of the IHS in carrying out its statutory mission.

(b) The Notice of Grant Awards specifies how long the Secretary intends to support the project period without requiring the project to re-compete for funds. This period, called the project period, will usually be for one to two years. The total project period comprises the original project period and any extension. Generally the grant will be for a one-year budget period, any subsequent award will also be a one-year budget period. A grantee must submit a separate application for each subsequent year. Decisions regarding continuation awards and the funding level of such awards will be made after consideration of such factors as the grantee's progress and management practices, and the availability of funds. In all cases, awards require a determination by the Secretary that funding is in the best interest of the Federal Government.

(c) Neither the approval of any application nor the award of any grant commits or obligates the Federal Government in any way to make any additional, supplemental, continuation or other award with respect to any approved application or portion of an approved application.

[40 FR 53143, Nov. 14, 1975, as amended at 50 FR 1854, Jan. 14, 1985. Redesignated and amended at 67 FR 35342, May 17, 2002]

§ 136.107 Use of project funds.

(a) A grantee shall only spend funds it receives under this subpart according to the approved application and budget, the regulations of this subpart, the terms and conditions of the award and the applicable cost principles prescribed in subpart Q of 45 CFR part 74.

(b) The provisions of any other Act notwithstanding, any funds made available to a tribal organization under grants pursuant to section 104(b) of the Act may be used as matching shares for any other Federal grant programs which contribute to the purposes for which grants under this section are made.

NOTE: This provision is excepted from application of 45 CFR 74.53 by section 104(c) of Pub. L. 93–638.

[40 FR 53143, Nov. 14, 1975, as amended at 50 FR 1854, Jan. 14, 1985]

§ 136.108 [Reserved]

§ 136.109 Availability of appropriations.

The Secretary will from time to time publish a notice in the FEDERAL REGISTER indicating by areas the allotment of funds and categories of activities for which awards may be made under this subpart. The Secretary may revise such allotments and categories from time to time and will promptly publish a notice of such revisions in the FEDERAL REGISTER.

§ 136.110 Facilities construction.

In addition to other requirements of this subpart:

(a) An applicant for a construction grant to build, renovate, modernize, or remodel a hospital, clinic, health station or quarters for housing personnel associated with such facilities, must in its application:

(1) Provide its assessment of the environmental impact of the project as called for by section 102(2)(c) of the National Environmental Policy Act of 1969 (42 U.S.C. 4332(c)).

(2) Furnish its evaluation of the project site in accordance with the terms and conditions of E.O. 11296, 31 FR 10663 (August 10, 1966) relating to the evaluation of flood hazards in locating federally owned or financed facilities.

(b) The following requirements are applicable to each construction grant to build, renovate, modernize, or remodel a hospital, clinic, health station or quarters for housing personnel associated with such facilities.

(1) Competitive bids. The approval of the Secretary shall be obtained before the project is advertised or placed on the market for bidding. The approval shall include a determination by the Secretary that the final plan and specifications conform to the minimum standards of construction and equipment specified in the grant award or in HHS documents specified in the grant award.

(2) There will be no preference given to local contractors or suppliers over non-local contractors or suppliers, except as otherwise provided in these regulations.

(3) Construction contracts and subcontracts under this program are subject to the Davis-Bacon Act (40 U.S.C. 276a *et seq.*). For requirements that grantees must observe for enforcing compliance by contractors and subcontractors, see the section on contract provisions in the procurement standards for HHS grantees made applicable by subpart P of 45 CFR part 74.

(4) Minimum standards of construction and equipment. The plans and specifications for the project will conform to the minimum standards of construction and equipment specified in the grant award or in HHS documents specified in the grant award.

(5) The following provision must be included in all construction contracts let by the grantee: ''The Secretary of the Department of Health and Human Services shall have access at all reasonable times to work wherever it is in preparation or progress, and the contractor shall provide proper facilities for such access and inspection.''

[40 FR 53143, Nov. 14, 1975, as amended at 50 FR 1854, Jan. 14, 1985]

§ 136.111 Interest.

Tribes and Tribal organizations shall not be held accountable for interest earned on grant funds, pending disbursement by such organization.

NOTE: This provision is excepted from application of 45 CFR 74.47(a) by section 106(b) of Pub. L. 93–638.

[40 FR 53143, Nov. 14, 1975, as amended at 50 FR 1854, Jan. 14, 1985]

§ 136.112 Additional conditions.

The Secretary may with respect to any grant award impose additional conditions prior to or at the time of any award when in his judgment such conditions are necessary to assure or protect advancement of the approved project, the interests of public health, or the conservation of grant funds.

§ 136.113 Fair and uniform provision of services.

Services provided pursuant to a grant under this subpart shall be provided by the Grantee in a fair and uniform manner to all participants in the project consistent with their medical need, the policies and regulations of the Indian Health Service, and the Act.

§ 136.114 Applicability of other Department regulations.

Several other regulations apply to grants under this subpart. These include to the extent applicable but are not limited to:

42 CFR part 50, subpart D, Public Health Service grant appeals procedure
45 CFR part 16, Procedures of the Departmental Grant Appeals Board
45 CFR part 74, Administration of grants
45 CFR part 75, Informal grant appeals procedures
45 CFR part 84, Nondiscrimination on the basis of handicap in programs and activities receiving or benefiting from Federal financial assistance
45 CFR part 86, Nondiscrimination on the basis of sex in education programs and activities receiving or benefiting from Federal financial assistance
45 CFR part 91, Nondiscrimination on the basis of age in HHS programs or activities receiving Federal financial assistance

NOTE: To the extent they provide special benefits to Indians, grants under this subpart are exempted from the requirements of section 601 of the Civil Rights Act of 1964 [42 U.S.C. 200d], prohibiting discrimination on

the basis of race, color or national origin, by regulation at 45 CFR 80.3(d) which provides, with respect to Indian health services, that, ''An individual shall not be deemed subjected to discrimination by reasons of his exclusion from the benefits of a program limited by Federal law to individuals of a particular race, color, or national origin different from his.

[50 FR 1854, Jan. 14, 1985]

§ 136.115 Rescission of grants.

(a) When the Secretary determines that the performance of a grantee under these regulations involves (1) the violation of the rights or endangerment of the health, safety, or welfare of any persons, or (2) gross negligence or the mismanagement in the handling or use of funds under the grant, the Secretary will, in writing, notify the grantee of such determination and will request that the grantee take such corrective action, within such period of time, as the Secretary may prescribe.

(b) When the Secretary determines that a grantee has not taken corrective action (as prescribed by him under paragraph (a) of this section) to his satisfaction, he may, after providing the grantee an opportunity for a hearing in accordance with paragraph (c) of this section, rescind the grant in whole or in part and if he deems it appropriate, assume or resume control or operation of the program, activity, or service involved.

(c) When the Secretary has made a determination described in paragraph (b) of this section, he shall in writing notify the grantee of such determination and of the grantee's right to request a review of such determination (and of the determination described in paragraph (a) of this section) under the Public Health Service Grant Appeals Procedure (42 CFR part 50, subpart D). Such notification by the Secretary shall set forth the reasons for the determination in sufficient detail to enable the grantee to respond and shall inform the grantee of its opportunity for review under such subpart D. If the review held under subpart D results in a response adverse to the grantee's position, the grantee shall be informed of its right to have a hearing before the Department Grant Appeals Board, pursuant to 45 CFR part 16.

(d) Where the Secretary determines that a grantee's performance under a grant awarded under this subpart poses an immediate threat to the safety of any person, he may immediately rescind the grant in whole or in part and if he deems it appropriate, assume or resume control or operation of the program, activity, or service involved. Upon such recission he will immediately notify the grantee of such action and the basis or reasons therefor; and offer the grantee an opportunity for a hearing to be held within 10 days of such action. If the grantee requests such a hearing, the Secretary will designate three officers or employees of the Department to serve as a hearing panel. No officer or employee from the immediate office of the official who made the decision to rescind the grant under this paragraph may be designated to serve on the hearing panel.

(1) The hearing shall be commenced within 10 days after the recission of the grant, shall be held on the record and shall afford the grantee the right:

(i) To notice of the issues to be considered;

(ii) To be represented by counsel;

(iii) To present witnesses on grantee's behalf; and

(iv) To cross-examine other witnesses either orally or through written interrogatories.

(2) The hearing panel shall, within 25 days after the conclusion of the hearing, notify all parties in writing of its decision.

(3) Such decision shall not be subject to further hearing under 42 CFR part 50, subpart D or 45 CFR part 16.

(e) In any case where the Secretary has rescinded a grant under paragraph (b) or (d) of this section, he may decline to enter into a new grant agreement with the grantee until such time as he is satisfied that the basis for the recission has been corrected. Nothing in this section shall be construed as contravening the Occupational Safety and Health Act of 1970 (84 Stat. 1590), as amended (29 U.S.C. 651).

(f) In any case where the Secretary has rescinded a grant for the delivery of health services under this subpart, the grantee shall, upon the request of

the Secretary, transfer to the Secretary all medical records compiled in the operation of the supported project.

NOTE: This section is an exception to 45 CFR part 74, subpart M required by section 109 of Pub. L. 93–638.

[40 FR 53143, Nov. 14, 1975, as amended at 50 FR 1855, Jan. 14, 1985]

§ 136.116 Reports.

In addition to the reporting and information requirements provided in subpart J of 45 CFR part 74 made applicable to grants under this subpart by § 136.114, each recipient of Federal financial assistance shall make such reports and information available to the Indian people served or represented by such recipient as and in a manner determined by the Secretary to be adequate.

NOTE: This section is a requirement in addition to 45 CFR part 74 and is required by section 5(c) of Pub. L. 93–638.

[40 FR 53143, Nov. 14, 1975, as amended at 50 FR 1855, Jan. 14, 1985. Redesignated and amended at 67 FR 35342, May 17, 2002]

§ 136.117 Amendment of regulations.

Before revising or amending the regulations in this subpart, the Secretary shall take the following actions:

(a) Consult with Indian Tribes and national and regional Indian organizations to the extent practicable about the need for revision or amendment and consider their views in preparing the proposed revision or amendment.

(b) Present the proposed revision or amendment to the Committees on Interior and Insular Affairs of the United States Senate and House of Representatives.

(c) Publish the proposed revisions or amendments in the FEDERAL REGISTER as proposed rulemaking to provide adequate notice to receive comments from, all interested parties.

(d) After consideration of all comments received, publish the regulations in the FEDERAL REGISTER in final form not less than 30 days before the date they are made effective.

§ 136.118 Effect on existing rights.

The regulations in this part are not meant to and do not:

(a) Affect, modify, diminish, or otherwise impair the sovereign immunity from suit enjoyed by an Indian tribe;

(b) Authorize, require or permit the termination of any existing trust responsibility of the United States with respect to the Indian people;

(c) Permit significant reduction in services to Indian people as a result of this subpart.

§ 136.119 Penalties.

Section 6 of Pub. L. 93–638, 25 U.S.C. 450(d) provides:

Whoever, being an officer, director, agent, or employee of, or connected in any capacity with, any recipient of a contract, subcontract, grant, or subgrant pursuant to this Act or the Act of April 16, 1934 (48 Stat. 596), as amended, embezzles, willfully misapplies, steals, or obtains by fraud any of the money, funds, assets, or property which are the subject of such a grant, subgrant, contract, or subcontract, shall be fined not more than $10,000 or imprisoned for not more than two years, or both, but if the amount so embezzled, misapplied, stolen, or obtained by fraud does not exceed $100, he shall be fined not more than $1,000 or imprisoned not more than one year, or both.

§ 136.120 Use of Indian business concerns.

Grants awarded pursuant to this subpart will incorporate the following:

Use of Indian business concerns.

(a) As used in this clause, the term ''Indian organizations of an Indian-owned economic enterprise'' as defined in section 102(g) of this subpart.

(b) The grantee agrees to give preference to qualified Indian business concerns in the awarding of any contracts, subcontracts or subgrants entered into under the grant consistent with the efficient performance of the grant. The grantee shall comply with any preference requirements regarding Indian business concerns established by the tribe(s) receiving services under the grant to the extent that such requirements are consistent with the purpose and intent of this paragraph.

NOTE: This section is an exception to 45 CFR part 74, required by section 7(b) of Pub. L. 93–638.

[40 FR 53143, Nov. 14, 1975, as amended at 50 FR 1855, Jan. 14, 1985]

§ 136.121 Indian preference in training and employment.

(a) Any grant made under this subpart, or a contract or subgrant made under such a grant shall require that, to the greatest extent feasible preferences and opportunities for training and employment in connection with the administration of such grant, or contract or subgrant made under such grant, shall be given to Indians.

(b) The grantee shall include the requirements of paragraph (a) of this section in all contracts and subgrants made under a grant awarded under this subpart.

Subpart I [Reserved]

Subpart J—Indian Health Care Improvement Act Programs

AUTHORITY: Secs. 102, 103, 106, 502, 702, and 704 of Pub. L. 94–437 (25 U.S.C. 1612, 1613, 1615, 1652, 1672 and 1674); sec. 338G of the Public Health Service Act, 95 Stat. 908 (42 U.S.C. 254r).

SOURCE: 42 FR 59646, Nov. 18, 1977, unless otherwise noted. Redesignated at 67 FR 35342, May 17, 2002.

SUBDIVISION J–1—PROVISIONS OF GENERAL AND SPECIAL APPLICABILITY

§ 136.301 Policy and applicability.

(a) *Policy*. (1) It is the policy of the Secretary to encourage Indians to enter the health professions and to ensure the availability of Indian health professionals to serve Indians. The recruitment and scholarship programs under this subpart will contribute to this objective.

(2) The regulations of this subpart are intended to be consistent with principles of Indian self-determination and to supplement the responsibilities of the Indian Health Sevice for Indian health manpower planning and for assisting Indian tribes and tribal organizations in the development of Indian manpower programs.

(b) *Applicability*. The regulations of this subpart are applicable to the following activities authorized by the Indian Health Care Improvement Act:

(1) The award of health professions recruitment grants under section 102 of the Act to recruit Indians into the health professions (Subdivision J–2);

(2) The award of preparatory scholarship grants and pregraduate scholarship grants under section 103 of the Act, as amended, to Indians undertaking compensatory and preprofessional education (Subdivisions J–3 and J–8);

(3) The award of Indian Health Scholarship grants pursuant to section 338G of the Public Health Service Act (42 U.S.C. 254r) to Indian or other students in health professions schools (Subdivision J–4):

(4) The provision of continuing education allowances to health professionals employed by the Service under section 106 of the Act (Subdivision J–5);

(5) Contracts with urban Indian organizations under section 502 of the Act to establish programs in urban areas to make health services more accessible to the urban Indian population (Subdivision J–6); and

(6) Leases with Indian tribes under section 704 of the Act (Subdivision J–7).

[42 FR 59646, Nov. 18, 1977, as amended at 49 FR 7381, Feb. 29, 1984; 50 FR 1855, Jan. 14, 1985]

§ 136.302 Definitions.

As used in this subpart: (a) *Act* means the Indian Health Care Improvement Act, Pub. L. 94–437 (25 U.S.C. 1601 *et seq.*).

(b) *Academic year* means the traditional approximately 9 month September to June annual session, except for students who attend summer session in addition to the traditional academic year during a 12 month period, for whom the academic year will be considered to be of approximately 12 months duration.

(c) [Reserved]

(d) *Compensatory preprofessional education* means any preprofessional education necessary to compensate for deficiencies in an individual's prior education in order to enable that individual to qualify for enrollment in a health professions school.

(e) *Health or educational entity* means an organization, agency, or combination thereof, which has the provision of health or educational programs as one of its major functions.

(f) *Health professions school* means any of the schools defined in paragraphs (m), (n), or (o) of this section.

(g) *Hospital* means general, tuberculosis, mental, and other types of hospitals, and related facilities such as laboratories, outpatient departments, extended care facilities, facilities related to programs for home health services, self-care units, education or training facilities for health professions personnel operated as an integral part of a hospital, and central services facilities operated in connection with hospitals, but does not include any hospital providing primarily domicillary care.

(h) *Indian* or *Indians* means, for purposes of Subdivisions J–2, J–3, J–4, and J–8 of this subpart, any person who is a member of an Indian tribe, as defined in parargraph (i) of this section or any individual who (1), irrespective of whether he or she lives on or near a reservation, is a member of a tribe, band or other organized group terminated since 1940 and those recognized now or in the future by the State in which they reside, or who is the natural child or grandchild of any such member, or (2) is an Eskimo or Aleut or other Alaska Native, or (3) is considered by the Secretary of the Interior to be an Indian for any purpose, or (4) is determined to be an Indian under regulations promulgated by the Secretary.

(i) *Indian health organization* means a nonprofit corporate body composed of Indians which provides for the maximum participation of all interested Indian groups and individuals and which has the provision of health programs as its principal function.

(j) *Indian tribe* means any Indian tribe, band, nation, or other organized group or community, including any Alaska native village or group or regional or village corporation as defined in or established pursuant to the Alaska Native Claims Settlement Act (43 U.S.C. 1601 *et seq.*), which is recognized as eligible for the special programs and services provided by the United States to Indians because of their status as Indians.

(k) *Nonprofit* as applied to any private entity means that no part of the net earnings of such entity inures or may lawfully inure to the benefit of any private shareholder or individual.

(l) [Reserved]

(m) *School of allied health professions* means a junior college, college, or university—

(1) Which provides, or can provide, programs of education leading to a certificate, or to an associate or baccalaureate degree (or the equivalent or either), or to a higher degree for preparing personnel with responsibilities for supporting, complementing, or supplementing the professional functions of physicians, dentists, and other health professionals in the delivery of health care to patients or assisting environmental engineers and others in environmental health control and preventive medicine activities.

(2) Which, if in a college or univerisity which does not include a teaching hospital or in a junior college, is affiliated through a written agreement with one or more hospitals which provide the hospital component of the clinical training required for completion of such programs of education. The written agreement shall be executed by individuals authorized to act for their respective institutions and to assume on behalf of their institution the obligations imposed by such agreement. The agreement shall provide:

(i) A description of the responsibilities of the school of allied health professions, the responsibilities of the hospital, and their joint responsibilities with respect to the clinical components of such programs of education; and

(ii) A description of the procedure by which the school of allied health professions and the hospital will coordinate the academic and clinical training of students in such programs of education; and

(iii) That, with respect to the clinical component of each such program of education, the teaching plan and resources have been jointly examined and approved by the appropriate faculty of the school of allied health professions and the staff of the hospital.

(3) Which is accredited or assured accreditation by a recognized body or bodies approved for such purpose by the Commissioner of Education of the Department of Health and Human Services.

(n) *School of medicine, school of dentistry, school of osteopathy, school of pharmacy, school of optometry, school of podiatry, school of veterinary medicine,* and *school of public health* means a school which provides training leading, respectively, to a degree of doctor of medicine, a degree of doctor of dental surgery or an equivalent degree, a degree of doctor of osteopathy, a degree of bachelor of science in pharmacy or an equivalent degree, a degree of doctor of podiatry or an equivalent degree, and graduate degree in public health, and including advanced training related to such training provided by any such school, and is accredited or assured accreditation by a recognized body or bodies approved for such purpose by the Commissioner of Education of the Department of Health and Human Services.

(o) *School of nursing* means a collegiate, associate degree, or diploma school of nursing, as those terms are defined below:

(1) The term *collegiate school of nursing* means a department, division, or other administrative unit in a college or university which provides primarily or exclusively a program of education in professional nursing and allied subjects leading to the degree of bachelor of arts, bachelor of science, bachelor of nursing, or to an equivalent degree, or to a graduate degree in nursing, and including advanced training related to such program of education provided by such school, but only if such program, or such unit, college or university is accredited;

(2) The term *associated degree school of nursing* means a department, division, or other administrative unit in a junior college, community college, college, or university which provides primarily or exclusively a two-year program of education in professional nursing and allied subjects leading to an associate degree in nursing or to an equivalent degree, but only if such program, or such unit, college or university is accredited;

(3) The term *diploma school of nursing* means a school affiliated with a hospital or university, or an independent school, which provides primarily or exclusively a program of education in professional nursing and allied subjects leading to a diploma or to equivalent indicia that such program has been satisfactorily completed, but only if such program, or such affiliated school or such hospital or university or such independent school is accredited.

(4) The term *accredited* as used in this subsection when applied to any program of nurse education means a program accredited or assured accreditation by a recognized body or bodies, or by a State agency, approved for such purpose by the Commissioner of Education of the Department of Health and Human Services and when applied to a hospital, school, college, or university (or a unit thereof) means a hospital, school, college, or university (or a unit thereof) which is accredited or assured accreditation by a recognized body or bodies, or by a State agency, approved for such purpose by the Commissioner of Education of the Department of Health and Human Services.

(p) *Secretary* means the Secretary of Health and Human Services and any other Officer or employee of the Department of Health and Human Services to whom the authority involved has been delegated.

(q) *Service* means the Indian Health Service.

(r) *State or local government* means any public health or educational entity which is included within the definition of State or local government in 45 CFR 74.3 and Indian tribes or tribal organizations.

(s) *Tribal organization* means the elected governing body of any Indian tribe or any legally established organization of Indians which is controlled by one or more such bodies or by a board of directors elected or selected by one or more such bodies (or elected by the Indian population to be served by such organization) and which includes the maximum participation of Indians in all phases of its activities.

(t) *Urban center* means any city, with a population of 10,000 or more as determined by the United States Census Bureau, which the Secretary determines has a sufficient urban Indian population with unmet health needs to warrant assistance under title V of the Act.

(u) *Urban Indian* means any individual who resides in an urban center,

as defined in paragraph(s) of this section, and who meets one or more of the four criteria in paragraphs (h) (1) through (4) of this section.

(v) *Urban Indian organization* means a nonprofit corporate body situated in an urban center which:

(1) Is governed by an Indian controlled board of directors:

(2) Has the provision of health programs as:

(i) Its principal function, or

(ii) One of its major functions and such health progams are administered by a distinct organizational unit within the organization.

(3) Provides for the maximum participation of all interested Indian groups and individuals; and

(4) Is capable of legally cooperating with other public and private entities for the purpose of performing the activities described in §36.350(a) of Subdivision J–6 of this subpart. Except, that criteria (2) and (3) of this subsection shall not apply to an organization administering an urban Indian health project under a contract with the Secretary prior to October 1, 1977, for the period of such contract or until July 1, 1978, whichever is later.

[42 FR 59646, Nov. 18, 1977, as amended at 49 FR 7381, Feb. 29, 1984; 50 FR 1855, Jan. 14, 1985]

§ 136.303 Indians applying for scholarships.

(a) For purposes of scholarship grants under Subdivisions J–3 and J–4 of this subpart, Indian applicants must submit evidence of their tribal membership (or other evidence that that applicant is an Indian as defined in paragraph (h) of §136.302 of this subdivision) satisfactory to the Secretary.

(b) Where an applicant is a member of a tribe recognized by the Secretary of the Interior, the applicant must submit evidence of his or her tribal membership, such as:

(1) Certification of tribal enrollment by the Secretary of the Interior acting through the Bureau of Indian Affairs (BIA); or

(2) In the absence of such BIA certification, documentation that the applicant meets the requirements of tribal membership as prescribed by the charter, articles of incorporation or other legal instrument of the tribe and has been officially designated a tribal member by an authorized tribal official; or

(3) Other evidence of tribal membership satisfactory to the Secretary.

(c) Where the applicant is a member of a tribe terminated since 1940 or a State recognized tribe, the applicant must submit documentation that the applicant meets the requirements of tribal membership as prescribed by the charter, articles of incorporation or other legal instrument of the tribe and has been officially designated a tribal member by an authorized tribal official; or other evidence, satisfactory to the Secretary, that the applicant is a member of the tribe. In addition, if the terminated or State recognized tribe of which the applicant is a member is not on a list of such tribes published by the Secretary in the FEDERAL REGISTER. the applicant must submit documentation as may be required by the Secretary that the tribe is a tribe terminated since 1940 or is recognized by the State in which the tribe is located in accordance with the law of that State.

(d) An applicant who is not a tribal member, but who is a natural child or grandchild of a tribal member as defined in paragraph (h) of §36.302 of this subdivision must submit evidence of such fact which is satisfactory to the Secretary, in addition to evidence of his or her parent's or grandparent's tribal membership in accordance with paragraphs (b) and (c) of this section.

[42 FR 59646, Nov. 18, 1977. Redesignated and amended at 67 FR 35342, May 17, 2002]

§ 136.304 Publication of a list of allied health professions.

The Secretary, acting through the Service, shall publish from time to time in the FEDERAL REGISTER a list of the allied health professions for consideration for the award of preparatory and Indian Health scholarships under subdivisions J–3 and J–4 of this Subpart, based upon his determination of the relative needs of Indians for additional service in specific allied health professions. In making that determination, the needs of the Service will be given priority consideration.

§ 136.305 Additional conditions.

The Secretary may, with respect to any grant award under this subpart, impose additional conditions prior to or at the time of any award when in his judgment such conditions are necessary to assure or protect advancement of the approved project, the interests of the public health, or the conservation of grant funds.

NOTE: *Nondiscrimination*. Grants and contracts under this subpart are exempted from the requirements of section 601 of the Civil Rights Act of 1964 (42 U.S.C. 2000d), prohibiting discrimination on the basis of race, color or national origin, by regulation at 45 CFR 80.3(d) which provides, with respect to Indian Health Services, that ''An individual shall not be deemed subjected to discrimination by reason of his exclusion from the benefits of a program limited by Federal law to individuals of a particular race, color, or national origin different from his.''

[42 FR 59646, Nov. 18, 1977, as amended at 50 FR 1855, Jan. 14, 1985]

SUBDIVISION J–2—HEALTH PROFESSIONS RECRUITMENT PROGRAM FOR INDIANS

§ 136.310 Health professions recruitment grants.

Grants awarded under this subdivision, in accordance with section 102 of the Act, are for the purpose of assisting in meeting the costs of projects to:

(a) Identify Indians with a potential for education or training in the health professions and encouraging and assisting them (1) To enroll in schools of medicine, osteopathy, dentistry, veterinary medicine, optometry, podiatry, pharmacy, public health, nursing, or allied health professions; or (2), if they are not qualified to enroll in any such school, to undertake such post-secondary education or training as may be required to qualify them for enrollment;

(b) Publicize existing sources of financial aid available to Indians enrolled in any school referred to in paragraph (a)(1) of this section or who are undertaking training necessary to qualify them to enroll in any such school; or

(c) Establish other programs which the Secretary determines will enhance and facilitate the enrollment of Indians, and the subsequent pursuit and completion by them of courses of study, in any school referred to in paragraph (a)(1) of this section.

§ 136.311 Eligibility.

Any Indian tribe, tribal organization, urban Indian organization, Indian health organization or any public or other nonprofit private health or educational entity is eligible to apply for a health professions recruitment grant under this subdivision.

§ 136.312 Application.

(a) Forms for applying for grants are governed by 45 CFR part 74, subpart N.[1]

(b) In addition to such other pertinent information as the Secretary may require, the application for a health professions recruitment grant shall contain the following:

(1) A description of the legal status and organization of the applicant;

(2) A description of the current and proposed participation of Indians (if any) in the applicant's organization.

(3) A description of the target Indian population to be served by the proposed project and the relationship of the applicant to that population;

(4) A narrative description of the nature, duration, purpose, need for and scope of the proposed project and of the manner in which the applicant intends to conduct the project including:

(i) Specific measurable objectives for the proposed project;

(ii) How the described objectives are consistent with the purposes of section 102 of the Act;

(iii) The work and time schedules which will be used to accomplish each of the objectives;

(iv) A description of the administrative, managerial, and organizational arrangements and the facilities and resources to be utilized to conduct the proposed project;

(v) The name and qualifications of the project director or other individual responsible for the conduct of the project; the qualifications of the prinicipal staff carrying out the

[1] Applications and instructions may be obtained from the appropriate Indian Health Service Area or Program Office or by writing the Director, Indian Health Service, Room 5A–55, 5600 Fishers Lane, Rockville, MD 20857.

project; and a description of the manner in which the applicant's staff is or will be organized and supervised to carry out the proposed project;

(5) An itemized budget for the budget period (normally 12 months) for which support is sought and justification of the amount of grant funds requested:

(6) The intended financial participation, if any, of the applicant in the proposed project specifying the type of contributions such as cash or services, loans of full or part-time staff, equipment, space, materials or facilities or other contributions;

(7) When the target population of a proposed project includes a particular Indian tribe or tribes, an official document in such form as is prescribed by the tribal governing body of each such tribe indicating that the tribe or tribes will cooperate with the applicant.

(c) In the case of proposed projects for identification of Indians with a potential for education or training in the health professions, applications must include a method of assessing the potential of interested Indians for undertaking necessary education or training in the health professions. Proposed projects may include, but are not limited to, the following activities:

(1) Identifying Indian elementary and secondary school students through observations, aptitude or other testing, academic performance, performance in special projects and activities, and other methods as may be designed or developed;

(2) Identifying Indians in college or university programs, related employment, upward mobility programs or other areas of activity indicative of interest and potential;

(3) Review of the upward mobility plans, skills, banks etc. of organizations employing Indians to identify individuals with appropriate career orientations, expression of interest, or recognized potential;

(4) Conducting workshops, health career days, orientation projects or other activities to identify interested Indians at any age level;

(5) Performing liaison activities with Indian professional organizations, Indian education programs (including adult education), Indian school boards, Indian parent, youth recreation or community groups, or other Indian special interest or activity groups;

(6) Identifying those Indians with an interest and potential who cannot undertake compensatory education or training in the health professions because of financial need.

(d) Proposed projects designed to encourage and assist Indians to enroll in health professions schools; or, if not qualified to enroll, to undertake post-secondary education or training required to qualify them for enrollment may include, but are not limited to, the following activities:

(1) Providing technical assistance and counseling to encourage and assist Indians identified as having a potential for education or training in the health professions—

(i) To enroll in health professions schools.

(ii) To undertake any post-secondary education and training required to qualify them to enroll in health professions schools, and

(iii) To obtain financial aid to enable them to enroll in health professions schools or undertake post-secondary education or training required to qualify them to enroll in such schools;

(2) Conducting programs to (i) identify factors such as deficiencies in basic communication, research, academic subject matter (such as science, mathematics, etc.), or other skills which may prevent or discourage Indians from enrolling in health professions schools or undertaking the post-secondary education or training required to qualify them to enroll, and (ii) provide counseling and technical assistance to Indians to assist them in undertaking the necessary education, training or other activities to overcome such factors.

(e) Proposed projects to publicize existing kinds of financial aid available to Indians enrolled in health professions schools or to Indians undertaking training necessary to qualify them to enroll in such schools may include, but are not limited to, the following activities:

(1) Collecting information on available sources of financial aid and disseminating such information to Indian students, Indians, recruited under programs assisted by grants under this

subdivision and to Indian tribes, tribal organizations, urban Indian organizations, Indian health organizations and other interested groups and communities throughout the United States;

(2) Providing information on available sources of financial aid which can be utilized by programs and counselors assisting Indians to obtain financial aid.

(f) Proposed projects for establishment of other programs which will enhance or facilitate enrollment of Indians in health professions schools and the subsequent pursuit and completion by them of courses of study in such schools may include, but are not limited to, the following activities:

(1) Compilation and dissemination of information on—

(i) Health professions education or training programs and the requirements for enrollment in such programs; and

(ii) Post-secondary education or training curricula and programs designed to qualify persons for enrollment in health professions schools;

(2) Developing and coordinating career orientation programs in local schools (including high schools) and colleges and universites;

(3) Developing programs to enable Indians to gain exposure to the health professions such as arranging for (i) visits to health care facilities and programs and meetings or seminars with health professionals, (ii) part-time summer or rotating employment in health care facilities, programs, or offices of health professionals, (iii) volunteer programs, or (iv) other means of providing such exposure;

(4) Developing programs which relate tribal culture and tradition, including native medicine, to careers in the health professions; and

(5) Developing programs to make Indians aware of projected health manpower needs, expected employment opportunities in the health professions, and other factors in order to orient and motivate Indians to pursue careers in the health professions.

[42 FR 59646, Nov. 18, 1977, as amended at 50 FR 1855, Jan. 14, 1985]

§ 136.313 Evaluation and grant awards.

(a) Within the limits of funds available for such purpose, the Secretary, acting through the Service, may award health professions recruitment grants to those eligible applicants whose proposed projects will in his judgment best promote the purposes of section 102 of the Act, taking into consideration:

(1) The potential effectiveness of the proposed project in carrying out such purposes;

(2) The capability of the applicant to successfully conduct the project;

(3) The accessibility of the applicant to target Indian communities or tribes, including evidence of past or potential cooperation between the applicant and such communities or tribes;

(4) The relationship of project objectives to known or anticipated Indian health manpower deficiencies;

(5) The soundness of the fiscal plan for assuring effective utilization of grant funds;

(6) The completeness of the application.

(b) Preference shall be given to applicants in the following order or priority: (1) Indian tribes, (2) tribal organizations, (3) urban Indian organizations and other Indian health organizations, and (4) public and other nonprofit profit private health or educational entities.

(c) The Notice of Grant Awards specifies how long the Secretary intends to support the project period without requiring the project to re-compete for funds. This period, called the project period, will usually be for one to two years. The total project period comprises the original project period and any extension. Generally the grant will be for a one year budget period, any subsequent award will also be a one year budget period. A grantee must submit a separate application for each subsequent year. Decisions regarding continuation awards and the funding level of such awards will be made after consideration of such factors as the grantee's progress and management practices, and the availability of funds. In all cases, awards require a determination by the Secretary that funding is in the best interest of the Federal Government.

(d) Neither the approval of any application nor the award of any grant commits or obligates the Federal Government in any way to make any additional, supplemental, continuation, or other award with respect to any approved application or portion of an approved application.

[42 FR 59646, Nov. 18, 1977, as amended at 50 FR 1855, Jan. 14, 1985]

§ 136.314 Use of funds.

A grantee shall only spend funds it receives under this subpart according to the approved application and budget, the regulations of this subpart, the terms and conditions of the award, and the applicable cost principles prescribed in subpart Q of 45 CFR part 74.

[50 FR 1855, Jan. 14, 1985]

§ 136.315 Publication of list of grantees and projects.

The Secretary acting through the Service shall publish annually in the FEDERAL REGISTER a list of organizations receiving grants under this subdivision including for each grantee:

(a) The organization's name and address;

(b) The amount of the grant;

(c) A summary of the project's purposes and its geographic location.

§ 136.316 Other HHS regulations that apply.

Several other regulations apply to grants under this subdivision. These include but are not limited to:

42 CFR part 50, subpart D, Public Health Service grant appeals procedure

42 CFR part 16, Procedures of the Departmental Grant Appeals Board

45 CFR part 74, Administration of grants

45 CFR part 75, Informal grant appeals procedures

45 CFR part 84, Nondiscrimination on the basis of handicap in programs and activities receiving or benefiting from Federal financial assistance

45 CFR part 86, Nondiscrimination on the basis of sex in education programs and activities receiving or benefiting from Federal financial assistance

45 CFR part 91, Nondiscrimination on the basis of age in HHS programs or activities receiving Federal financial assistance

[50 FR 1855, Jan. 14, 1985]

SUBDIVISION J–3—HEALTH PROFESSIONS PREPARATORY SCHOLARSHIP PROGRAM FOR INDIANS

§ 136.320 Preparatory scholarship grants.

Scholarship grants may be awarded under this subdivision and section 103 of the act for the period (not to exceed two academic years) necessary to complete a recipient's compensatory preprofessional education to enable the recipient to qualify for enrollment or re-enrollment in a health professions school. Examples of individuals eligible for such grants are the individual who:

(a) Has completed high school equivalency and needs compensatory preprofessional education to enroll in a health professions school;

(b) Has a baccalaureate degree and needs compensatory preprofessional education to qualify for enrollment in a health professions school; or

(c) Has been enrolled in a health professions school but is no longer so enrolled and needs preprofessional education to qualify for readmission to a health professions school.

§ 136.321 Eligibility.

To be eligible for a preparatory scholarship grant under this subdivision an applicant must:

(a) Be an Indian;

(b) Have successfully completed high school education or high school equivalency;

(c) Have demonstrated to the satisfaction of the Secretary the desire and capability to successfully complete courses of study in a health professions school;

(d) Be accepted for enrollment in or be enrolled in any compensatory preprofessional education course or curriculum meeting the criteria in § 136.320 of this subdivision; and

(e) Be a citizen of the United States.

[42 FR 59646, Nov. 18, 1977. Redesignated and amended at 67 FR 35342, May 17, 2002]

§ 136.322 Application and selection.

(a) An application for a preparatory scholarship grant under this subdivision shall be submitted in such form

and at such time as the Secretary acting through the Service may prescribe.[1] However, an application must indicate:

(1) The health profession which the applicant wishes to enter, and

(2) Whether the applicant intends to provide health services to Indians upon completion of health professions education or training by serving as described in § 136.332 or otherwise as indicated on the application.

(b) Within the limits of funds available for the purpose, the Secretary, acting through the Service, shall make scholarship grant awards for a period not to exceed two academic years of an individual's compensatory preprofessional education to eligible applicants taking into consideration:

(1) Academic performance;

(2) Work experience;

(3) Faculty recommendations;

(4) Stated reasons for asking for the scholarship; and

(5) The relative needs of the Service and Indian health organizations for persons in specific health professions.

[42 FR 59646, Nov. 18, 1977, as amended at 49 FR 7381, Feb. 29, 1984. Redesignated and amended at 67 FR 35342, May 17, 2002]]

§ 136.323 Scholarship and tuition.

(a) Scholarship grant awards under this subdivision shall consist of:

(1) A stipend of $400 per month adjusted in accordance with paragraph (c) of this section; and

(2) An amount determined by the Secretary for transportation, tuition, fees, books, laboratory expenses, and other necessary educational expenses.

(b) The portion of the scholarship for the costs of tuition and fees as indicated in the grant award will be paid directly to the school upon receipt of an invoice from the school. The stipend and remainder of the scholarship grant award will be paid monthly to the grantee under the conditions specified in the grant award.

(c) The amount of the monthly stipend specified in paragraph (a)(1) of this section shall be adjusted by the Secretary for each academic year ending in a fiscal year beginning after September 30, 1978, by an amount (rounded down to the next lowest multiple of $1) equal to the amount of such stipend multiplied by the overall percentage (as set forth in the report transmitted to the Congress under section 5305 of title 5, United States Code) of the adjustment in the rates of pay under the General Schedule made effective in the fiscal year in which such academic year ends.

[42 FR 59646, Nov. 18, 1977, as amended at 49 FR 7381, Feb. 29, 1984]

§ 136.324 Availability of list of recipients.

The Indian Health Service will provide to any persons requesting it a list of the recipients of scholarship grants under this subdivision, including the school attended and tribal affiliation of each recipient.

[49 FR 7381, Feb. 29, 1984]

SUBDIVISION J–4—INDIAN HEALTH SCHOLARSHIP PROGRAM

§ 136.330 Indian health scholarships.

Indian Health Scholarships will be awarded by the Secretary pursuant to 338A through 339G of the Public Health Service Act, and such implementing regulations as may be promulgated by the Secretary except as set out in this subdivision for the purpose of providing scholarships to Indian and other students at health professions schools in order to obtain health professionals to serve Indians.

[42 FR 59646, Nov. 18, 1977, as amended at 50 FR 1855, Jan. 14, 1985]

§ 136.331 Selection.

(a) The Secretary, acting through the Service, shall determine the individuals who receive Indian Health Scholarships.

(b) Priority shall be given to applicants who are Indians.

§ 136.332 Service obligation.

The service obligation provided in section 338G(b)(2) of the Public Health Service Act shall be met by the recipient of an Indian Health Scholarship by service in:

(a) The Indian Health Service.

[1] Applications and instructions may be obtained from the appropriate Indian Health Service Area or Program Office.

(b) An urban Indian organization assisted under Subdivision J–6.

(c) In private practice of his or her profession if, the practice (1) is situated in a health manpower shortage area, designated under section 332 of the Public Health Service Act and (2) addresses the health care needs of a substantial number of Indians as determined by the Secretary in accordance with guidelines of the Service.

[42 FR 59646, Nov. 18, 1977, as amended at 50 FR 1855, Jan. 14, 1985]

§ 136.333 Distribution of scholarships.

The Secretary, acting through the Service, shall determine the distribution of Indian Health Scholarships among the health professions based upon the relative needs of Indians for additional service in specific health professions. In making that determination the needs of the Service will be given priority consideration. The following factors will also be considered:

(a) The professional goals of recipients of scholarships under section 103 of the Indian Health Care Improvement Act; and

(b) The professional areas of study of Indian applicants.

§ 136.334 Publication of a list of recipients.

The Secretary, acting through the Service, will publish annually in the FEDERAL REGISTER a list of recipients of Indian Health Scholarships, including the name of each recipient, tribal affiliation if applicable, and school.

SUBDIVISION J–5—CONTINUING EDUCATION ALLOWANCES

§ 136.340 Provision of continuing education allowances.

In order to encourage physicians, dentists and other health professionals to join or continue in the Service and to provide their services in the rural and remote areas where a significant portion of the Indian people reside, the Secretary, acting through the Service, may provide allowances to health professionals, employed in the Service in order to enable them to leave their duty stations for not to exceed 480 hours of professional consultation and refresher training courses in any one year.

SUBDIVISION J–6—CONTRACTS WITH URBAN INDIAN ORGANIZATIONS

§ 136.350 Contracts with Urban Indian organizations.

(a) The Secretary, acting through the Service, to the extent that funds are available for the purpose, shall contract with urban Indian organizations selected under § 36.351 of this subdivision to carry out the following activities in the urban centers where such organizations are situated:

(1) Determine the population of urban Indians which are or could be recipients of health referral or care services;

(2) Identify all public and private health service resources within the urban center in which the organization is situated which are or may be available to urban Indians;

(3) Assist such resources in providing service to such urban Indians;

(4) Assist such urban Indians in becoming familiar with and utilizing such resources;

(5) Provide basic health education to such urban Indians;

(6) Establish and implement manpower training programs to accomplish the referral and education tasks set forth in paragraphs (a)(3) through (5) of this section;

(7) Identify gaps between unmet health needs of urban Indians and the resources available to meet such needs;

(8) Make recommendations to the Secretary and Federal, State, local, and other resource agencies on methods of improving health service programs to meet the needs of urban Indians; and

(9) Prove or contract for health care services to urban Indians where local health delivery resources are not available, not accessible, or not acceptable to the urban Indians to be served.

(b) Contracts with urban Indian organizations pursuant to this title shall be in accordance with all Federal contracting laws and regulations except that, in the discretion of the Secretary, such contracts may be negotiated without advertising and need not conform to the provisions of the Act of August 24, 1935 as amended, (The Miller Act, 40

U.S.C. 270a *et seq.* which is concerned with bonding requirements).

(c) Payments under contracts may be made in advance or by way of reimbursement and in such installments and on such conditions as the Secretary deems necessary to carry out the purposes of title V of the Act.

(d) Notwithstanding any provision of law to the contrary, the Secretary may, at the request or consent of an urban Indian organization, revise or amend any contract made by him with such organization pursuant to this subdivision as necessary to carry out the purposes of title V of this Act: Provided, however, that whenever an urban Indian organization requests retrocession of the Secretary for any such contract, retrocession shall become effective upon a date specified by the Secretary not more than one hundred and twenty days from the date of the request by the organization or at such later date as may be mutually agreed to by the Secretary and the organization.

(e) In connection with any contract made pursuant to this subdivision, the Secretary may permit an urban Indian organization to utilize, in carrying out such contract, existing facilities owned by the Federal Government within his jurisdiction under such terms and conditions as may be agreed upon for their use and maintenance.

§ 136.351 Application and selection.

(a) Proposals for contracts under this subdivision shall be submitted in such form and manner and at such time as the Secretary acting through the Service may prescribe.

(b) The Secretary, acting through the Service shall select urban Indian organizations with which to contract under this subdivision whose proposals will in his judgment best promote the purposes of title V of the Act taking into consideration the following factors:

(1) The extent of the unmet health care needs of the urban Indians in the urban center involved determined on the basis of the latest available statistics on disease incidence and prevalence, life expectancy, infant mortality, dental needs, housing conditions, family income, unemployment statistics, etc.

(2) The urban Indian population which is to receive assistance in the following order of priority:

(i) 9,000 or more;

(ii) 4,500 to 9,000;

(iii) 3,000 to 4,500;

(iv) 1,000 to 3,000;

(v) Under 1,000.

(3) The relative accessibility which the urban Indian population to be served has to health care services, in the urban center. Factors to be considered in determining relative accessibility include:

(i) Cultural barriers;

(ii) Discrimination against Indians;

(iii) Inability to pay for health care;

(iv) Lack of facilities which provide free care to indigent persons;

(v) Lack of state or local health programs;

(vi) Technical barriers created by State and local health agencies;

(vii) Availability of transportation to health care services;

(viii) Distance between Indian residences and the nearest health care facility.

(4) The extent to which required activities under § 136.350(a) of this subdivision would duplicate any previous or current public or private health services projects in the urban center funded by another source. Factors to be considered in determining duplication include:

(i) Urban Indian utilization of existing health services funded by other sources;

(ii) Urban Indian utilization of existing health services delivered by an urban Indian organization funded by other sources.

(5) The appropriateness and likely effectiveness of the activities required in § 136.350(a) of this subdivision in the urban center involved.

(6) The capability of the applicant urban Indian organization to perform satisfactorily the activities required in § 136.350(a) of this subdivision and to contract with the Secretary.

(7) The extent of existing or likely future participation in the activities required in § 136.350(a) of this subdivision by appropriate health and health related Federal, State, local, and other resource agencies.

(8) Whether the city has an existing urban Indian health program.

(9) The applicant organization's record of performance, if any, in regard to any of the activities required in § 136.350(a) of this subdivision.

(10) Letters demonstrating local support for the applicant organization from both the Indian and non-Indian communities in the urban center involved.

[42 FR 59646, Nov. 18, 1977; 42 FR 61861, Dec. 7, 1977. Redesignated and amended at 67 FR 35342, May 17, 2002]

§ 136.352 Fair and uniform provision of services.

Contracts with urban Indian organizations under this subdivision shall incorporate the following clause:

The Contractor agrees, consistent with medical need, and the efficient provision of medical services to make no discriminatory distinctions against Indian patients or beneficiaries of this contract which are inconsistent with the fair and uniform provision of services.

§ 136.353 Reports and records.

For each fiscal year during which an urban Indian organization receives or expends funds pursuant to a contract under this title, such organization shall submit to the Secretary a report including information gathered pursuant to § 136.350(a) (7) and (8) of this subdivision, information on activities conducted by the organization pursuant to the contract, an accounting of the amounts and purposes for which Federal funds were expended, and such other information as the Secretary may request. The reports and records of the urban Indian organization with respect to such contract shall be subject to audit by the Secretary and the Comptroller General of the United States.

[42 FR 59646, Nov. 18, 1977. Redesignated and amended at 67 FR 35342, May 17, 2002]

SUBDIVISION J–7—LEASES WITH INDIAN TRIBES

§ 136.360 Leases with Indian tribes.

(a) Any land or facilities otherwise authorized to be acquired, constructed, or leased to carry out the purposes of the Act may be leased or subleased from Indian tribes for periods not in excess of twenty years.

(b) Leases entered into pursuant to paragraph (a) shall be subject to the requirements of section 322 of the Economy Act (40 U.S.C. 278a), which limits expenditures for rent and alterations, improvements and repairs on leased buildings.

SUBDIVISION J–8—HEALTH PROFESSIONS PREGRADUATE SCHOLARSHIP PROGRAM FOR INDIANS

SOURCE: 49 FR 7381, Feb. 29, 1984, unless otherwise noted. Redesignated at 67 FR 35342, May 17, 2002.

§ 136.370 Pregraduate scholarship grants.

(a) Pregraduate scholarship grants may be awarded under this subdivision and section 103 of the Act for the period (not to exceed four academic years) necessary to complete a recipient's pregraduate education leading to a baccalaureate degree in a premedicine, preoptometry, predentistry, preosteopathy, preveterinary medicine, or prepodiatry curriculum or equivalent.

(b) Students enrolled in accredited health professional or allied health professional programs which lead to eligibility for licensure, certification, registration or other types of credentials required for the practice of a health or allied health profession are ineligible for scholarships under this subdivision. Examples of health professions and allied health professions that will not be considered for funding include but are not limited to: nursing, audiology, medical technology, dental hygiene, dental technicians, engineering, radiologic technology, dietitian, nutritionist, social work, health education, physical therapy, occupational therapy and pharmacy. Scholarships for students in these programs are provided under Subdivision J–4 of this subpart.

§ 136.371 Eligibility.

To be eligible for a pregraduate scholarship grant under this subdivison an applicant must:

(a) Be an Indian;

(b) Have successfully completed high school education or high school equivalency;

(c) Have demonstrated to the satisfaction of the Secretary the desire and capability to successfully complete courses of study in a pregraduate education program meeting the criteria in § 136.370;

(d) Be accepted for enrollment in or be enrolled in any accredited pregraduate education curriculum meeting the criteria in § 136.370 of this subdivision; and

(e) Be a citizen of the United States.

[49 FR 7381, Feb. 29, 1984. Redesignated and amended at 67 FR 35342, May 17, 2002]

§ 136.372 Application and selection.

(a) An application for a pregraduate scholarship grant under this subdivision shall be submitted in such form and at such time as the Secretary may prescribe. However, an application must indicate:

(1) The pregraduate program in which the applicant is or wishes to enter, and

(2) Whether the applicant intends to provide health services to Indians upon completion of health professions education or training by serving as described in § 136.332 or otherwise as indicated on the application.

(b) Within the limits of available funds, the Director, IHS, shall make pregraduate scholarship grant awards for a period not to exceed four academic years of an individual's pregraduate education to eligible applicants taking into consideration:

(1) Academic performance;

(2) Work experience;

(3) Faculty or employer recommendation;

(4) Stated reasons for asking for the scholarship; and

(5) The relative needs of the IHS and Indian health organizations for persons in specific health professions.

(Approved by the Office of Management and Budget under control number 0915–0080)

[49 FR 7381, Feb. 29, 1984. Redesignated and amended at 67 FR 35342, May 17, 2002]

§ 136.373 Scholarship and tuition.

(a) Scholarship grant awards under this subdivision shall consist of:

(1) A stipend of $400 per month adjusted in accordance with paragraph (c) of this section; and

(2) An amount determined by the Secretary for transportation, tuition, fees, books, laboratory expenses and other necessary educational expenses.

(b) The portion of the scholarship for the costs of tuition and fees as indicated in the grant award will be paid directly to the school upon receipt of an invoice from the school. The stipend and remainder of the scholarship grant award will be paid monthly to the grantee under the conditions specified in the grant award.

(c) The amount of the monthly stipend specified in paragraph (a)(1) of this section shall be adjusted by the Secretary for each academic year ending in a fiscal year beginning after September 30, 1978, by an amount (rounded down to the next lowest multiple of $1) equal to the amount of such stipend multiplied by the overall percentage (as set forth in the report transmitted to the Congress under section 5305 of title 5, United States Code) of the adjustment in the rates of pay under the General Schedule made effective in the fiscal year in which such academic year ends.

§ 136.374 Availability of list of recipients.

The IHS will provide to any person requesting it a list of the recipients of scholarship grants under this subdivision, including the school attended and tribal affiliation of each recipient.

Subpart K—Indian Child Protection and Family Violence Prevention

SOURCE: 67 FR 59467, Sept. 23, 2002, unless otherwise noted.

§ 136.401 Purpose.

(a) The purpose of the regulations in this subpart is to establish minimum standards for Federal employees working in the Indian Health Service (IHS), including standards of character to ensure that individuals having regular contact with or control over Indian children have not been convicted of certain types of crimes as mandated by section 408 of the Indian Child Protection and Family Violence Prevention

Act (the ''Act''), Public Law (Pub. L.) 101–630, 104 Stat. 4544, 25 U.S.C. 3201–3211, as amended by section 814 of the Native American Laws Technical Corrections Act of 2000. In order to implement these minimum standards of character, these regulations also address:

(1) The efficiency standards to ensure that individuals are qualified for the positions they hold or seek, as mandated by Section 408 of the Act.

(2) Fitness standards to ensure child care service employees are fit to have responsibility for the safety and well-being of children, as mandated by Section 231 of the Crime Control Act of 1990, Pub. L. 101–647, 42 U.S.C. 13041.

(3) Suitability standards to ensure that individuals have not acted in a manner that places others at risk or raised questions about their trustworthiness, as mandated by 5 CFR part 731.

(b) The Act requires that Tribes or Tribal organizations who receive funds under the Indian Self-Determination and Education Assistance Act (ISDEA), Pub. L. 93–638, employ individuals in positions involving regular contact with or control over Indian children only if the individuals meet standards of character no less stringent than those prescribed under these regulations. Thus, the minimum standards of character as defined in these regulations will become the basis for Tribes or Tribal organizations to use when developing their own minimum standards of character that cannot be less stringent than as prescribed herein.

§ 136.402 Policy.

In enacting the Indian Child Protection and Family Violence Prevention Act, (the ''Act'') the Congress recognized there is no resource more vital to the continued existence and integrity of Indian Tribes than their children and that the United States has a direct interest, as trustee, in protecting Indian children who are members of, or are eligible for membership in, an Indian Tribe. The minimum standards of character as prescribed by the regulations in this subpart are intended to ensure that Indian children are protected.

§ 136.403 Definitions.

Crimes against Persons means a crime that has as an element the use, attempted use, or threatened use of physical force or other abuse of a person and includes, but is not limited to, homicide; assault; kidnapping; false imprisonment; reckless endangerment; robbery; rape; sexual assault, molestation, exploitation, contact, or prostitution; and other sexual offenses. In determining whether a crime falls within this category, the applicable Federal, State, or Tribal law under which the individual was convicted or pleaded guilty or nolo contendere shall be controlling.

Crimes of violence means a crime that has as an element the use, attempted use, or threatened use of physical force against the person or property of another, or any other crime that is a felony and that, by its nature, involves substantial risk that physical force against the person or property of another may be used in the course of committing the crime. In determining whether a crime falls within this category, reference may be made to the applicable Federal, State, or Tribal law under which the individual was convicted or pleaded guilty or nolo contendere.

Indian means any individual who is a member of an Indian Tribe, as defined below.

Indian child means any unmarried person under the age of eighteen who is either a member of an Indian Tribe or eligible for membership in an Indian Tribe and is the biological child of a member of an Indian Tribe.

Indian Tribe means any Indian Tribe, band, nation, or other organized group or community, including any Alaska Native village or regional or village corporation as defined in or established pursuant to the Alaska Native Claims Settlement Act, 43 U.S.C. 1601 *et seq.*, which is recognized as eligible for the special programs and services provided by the United States to Indians because of their status as Indians.

Individuals means persons with duties and responsibilities that involve regular contact with or control over Indian children and includes but is not limited to the following:

(a) Persons in the competitive or excepted service (including temporary employment), the Commissioned Corps, or the Senior Executive Service in the IHS;

(b) Persons who perform service for or under the supervision of the IHS while being permanently assigned to another IHS office or to another organization, such as a Federal agency, State, or Tribe;

(c) Persons who volunteer to perform services in IHS facilities;

(d) Persons who contract with the IHS to perform services in IHS facilities.

Must or shall indicates a mandatory or imperative act or requirement.

Offenses against children means any felonious or misdemeanor crime under Federal, State, or Tribal law committed against a victim that has not attained the age of eighteen years. In determining whether a crime falls within this category, the applicable Federal, State, or Tribal law under which the individual was convicted or pleaded guilty or nolo contendere shall be controlling.

Regular contact with or control over an Indian child means responsibility for an Indian child(ren) within the scope of the individual's duties and responsibilities or contact with an Indian child(ren) on a recurring and foreseeable basis.

Tribal Organization as defined in the ISDEA, means the recognized governing body of any Indian Tribe or any legally established organization of Indians which is controlled, sanctioned, or chartered by such governing body or which is democratically elected by the adult members of the Indian community to be served by such organization and which includes the maximum participation of Indians in all phases of its activities.

§ 136.404 What does the Indian Child Protection and Family Violence Prevention Act require of the IHS and Indian Tribes or Tribal organizations receiving funds under the ISDEA?

(a) The IHS must compile a list of all authorized positions with duties and responsibilities that involve regular contact with or control over Indian children; investigate the character of each individual who is employed or is being considered for employment in such a position; and prescribe minimum standards of character that each individual must meet to be appointed or employed in such positions.

(b) All Indian Tribes or Tribal organizations receiving funds under the authority of the ISDEA must identify those positions that permit regular contact with or control over Indian children; conduct an investigation of the character of each individual who is employed or is being considered for employment in a position that involves regular contact with or control over Indian children; and employ only individuals who meet standards of character that are no less stringent than those prescribed by regulations in this subpart.

§ 136.405 What are the minimum standards of character for individuals placed in, or applying for, a position that involves regular contact with or control over Indian children?

The minimum standards of character shall mean a benchmark of moral, ethical, and emotional strengths established by character traits and past conduct to ensure that the individual is competent to complete his/her job without harm to Indian children. In order to protect Indian children, the IHS has established minimum standards of character requiring completion of a satisfactory background investigation that ensures that no individuals who have been found guilty of, or entered a plea of nolo contendere or guilty to, any felonious offense or any of two or more misdemeanor offenses under Federal, State, or Tribal law involving crimes of violence; sexual assault, molestation, exploitation, contact, or prostitution; crimes against persons; or offenses committed against children, are placed in positions involving regular contact with or control over Indian children.

§ 136.406 Under what circumstances will the minimum standards of character be considered to be met?

The minimum standards of character shall be considered met only after the individual has been the subject of a satisfactory background investigation.

The background investigation shall include a review of:

(a) The individual's trustworthiness, through inquiries with the individual's references and places of employment and education;

(b) A criminal history background check, which includes a fingerprint check through the Criminal Justice Information Services Division of the Federal Bureau of Investigation (FBI), under procedures approved by the FBI, and inquiries to State and Tribal law enforcement agencies for the previous five years of residence listed on the individual's application; and

(c) A determination as to whether the individual has been found guilty of or entered a plea of nolo contendere or guilty to any felonious offense or any of two or more misdemeanor offenses under Federal, State, or Tribal law involving crimes of violence; sexual assault, molestation, exploitation, contact, or prostitution; crimes against persons; or offenses committed against children.

§ 136.407 Under what circumstances should a conviction, or plea of nolo contendere or guilty to, be considered if there has been a pardon, expungement, set aside, or other court order of the conviction or plea?

All convictions or pleas of nolo contendere or guilty to should be considered in making a determination unless a pardon, expungement, set aside or other court order reaches the plea of guilty, plea of nolo contendere, or the finding of guilt.

§ 136.408 What are other factors, in addition to the minimum standards of character, that may be considered in determining placement of an individual in a position that involves regular contact with or control over Indian children?

(a) All Federal employees are subject to suitability criteria contained in 5 CFR part 731 as a condition of employment.

(b) Section 231 of the Crime Control Act of 1990, Pub. L. 101–647, 42 U.S.C. 13041, provides that an individual may be disqualified from consideration or continuing employment if such individual has been convicted of a sex crime, an offense involving a child victim or a drug felony, or any other crime if such conviction bears on an individual's fitness to have responsibility for the safety and well-being of children.

(c) Tribes or Tribal organizations may but are not required to apply additional criteria in determining whether an individual is suitable for a position with duties and responsibilities that involve regular contact with or control over Indian children. Any additional suitability criteria established by Tribes or Tribal organizations beyond the minimum standards of character described in § 136.405 and § 136.406 would be determined by each individual Tribe or Tribal organization in accordance with its own personnel policies and procedures.

§ 136.409 What positions require a background investigation and determination of eligibility for employment or retention?

(a) All positions that allow an individual regular contact with or control over Indian children are subject to a background investigation and determination of eligibility for employment. The IHS has compiled a list of positions within the agency in which the duties and responsibilities could involve regular contact with or control over Indian children. The list will be periodically updated and made available at all IHS Personnel Offices upon request. Positions should be reviewed on a case-by-case basis to determine whether the individual in that position has regular contact with or control over Indian children.

(b) Tribes and Tribal organizations may use the list compiled by the IHS or develop their own procedures to determine within their program those positions that involve regular contact with or control over Indian children.

§ 136.410 Who conducts the background investigation and prepares determinations of eligibility for employment?

(a) The IHS must use the Office of Personnel Management (OPM) to conduct background investigations for Federal employees. The IHS must designate qualified security personnel to

adjudicate the results of background investigations.

(b) Indian Tribes and Tribal organizations may conduct their own background investigations, contract with private firms, or may request that a Federal or State agency conduct investigations. (FBI criminal history record information, however, may only be received or evaluated by governmental agencies, including Tribes or Tribal organizations as defined in these regulations at § 136.403, and may not be disseminated to private entities.)

§ 136.411 Are the requirements for IHS adjudication different from the requirements for Indian Tribes and Tribal organizations?

Yes, in conducting background investigations and adjudicating eligibility for employment in Tribal positions that allow regular contact with or control over Indian children, Indian Tribes or Tribal organizations may, but are not required to, adopt portions of the rules in this subpart that are specifically applicable to employment with the IHS.

§ 136.412 What questions must the IHS ask as part of the background investigation?

(a) Applications for employment with the IHS must include the following questions:

(1) Has the individual been arrested or charged with a crime involving a child? If yes, the individual must provide the date, explanation of the violation, disposition of the arrest or charge, place of occurrence, and the name and address of the police department or court involved.

(2) Has the individual ever been found guilty of, or entered a plea of nolo contendere or guilty to, any felonious or misdemeanor offense, under Federal, State, or Tribal law involving crimes of violence; sexual assault, molestation, exploitation, contact, or prostitution; crimes against persons; or offenses committed against children? If yes, the individual must provide an explanation of the violation, place of occurrence, date and disposition of the court proceeding, and the name and address of the police department or court involved.

(b) The IHS must require that the individual sign, under penalty of perjury, a statement verifying the truth of all information provided in the employment application and acknowledging that knowingly falsifying or concealing a material fact is a felony that may result in fines up to $10,000 or five years imprisonment, or both.

(c) The IHS must inform the individual that a criminal history record check is a condition of employment and require the individual to consent in writing to a criminal history record check.

§ 136.413 What protections must the IHS and Tribes or Tribal organizations provide to individuals undergoing a background investigation?

(a) The IHS must comply with all policies, procedures, criteria, and guidance contained in other appropriate guidelines, such as the OPM policies, procedures, criteria, and guidance. Questions asked in § 136.412 will be added as an addendum to item #16 of the OPM Optional Form 306, ''Declaration for Federal Employment.'' The information is collected as part of the OPM Optional Form 306 and is safeguarded in accordance with Privacy Act provisions.

(b) Indian Tribes and Tribal organizations must comply with the privacy requirements of the Federal, State, or other Tribal agency providing the background investigations. Indian Tribes and Tribal organizations may establish their own procedures that safeguard information derived from background investigations.

§ 136.414 How does the IHS determine eligibility for placement or retention of individuals in positions involving regular contact with Indian children?

(a) Adjudication is the process IHS uses to determine eligibility for placement or retention of individuals in positions involving regular contact with Indian children. The adjudication process protects the interests of the employer and the right of applicants and employees. Adjudication requires uniform evaluation to ensure fair and consistent judgment.

(b) Each case is judged on its own merits. All available information, both

favorable and unfavorable, should be considered and assessed in terms of accuracy, completeness, relevance, seriousness, overall significance, and how similar cases have been handled in the past.

(c) The adjudicating official who conducts the adjudication must first have been the subject of a favorable background investigation.

(d) Each adjudicating official must be thoroughly familiar with all laws, regulations, and criteria involved in making a determination for eligibility.

(e) The adjudicating official must review the background investigation to determine the character, reputation, and trustworthiness of the individual. At a minimum, the background investigation must:

(1) Review each security investigation form and employment application and compare the information provided.

(2) Review the results of written record searches requested from local law enforcement agencies, former employers, former supervisors, employment references, and schools.

(3) Review the results of the fingerprint charts maintained by the FBI or other law enforcement information maintained by other agencies.

(4) Review any other information obtained through a background investigation, including the results of searches by State human services agencies, the OPM National Agency Check and Inquiries, the OPM Security/Suitability Investigations Index, and the Defense Clearance and Investigations Index.

(5) Determine whether the individual has been found guilty of, or entered a plea of nolo contendere or guilty to, any felonious offense, or any of two or more misdemeanor offenses under Federal, State, or Tribal law, involving crimes of violence; sexual assault, molestation, exploitation, contact, or prostitution; crimes against persons; or offenses committed against children.

(f) After an opportunity has been afforded the individual to respond, pursuant to §136.415, and it is adjudicated that the individual has been found guilty of or entered a plea of nolo contendere or guilty to an enumerated offense under paragraph (e)(5) of this section, that individual shall not be placed or retained in a position involving regular contact with or control over Indian children.

(g) For individuals who have been determined to be ineligible for employment in positions having regular contact with or control over Indian children, the IHS may use Federal adjudicative standards to certify that an individual is suitable for employment in a position, if available, that does not involve regular contact with or control over Indian children. The adjudicating official must determine that the individual's prior conduct will not interfere with the performance of duties and will not create a potential risk to the safety and well-being of any Indian children after consideration of the following factors:

(1) The nature and seriousness of the conduct in question.

(2) The recency and circumstances surrounding the conduct in question.

(3) The age of the individual at the time of the incident.

(4) Societal conditions that may have contributed to the nature of the conduct.

(5) The probability that the individual will continue the type of behavior in question.

(6) The individual's commitment to rehabilitation and a change in the behavior in question.

(7) The degree of public trust and the possibility the public would be placed at risk if the individual is appointed to the position.

§136.415 What rights does an individual have during this process?

(a) The individual must be provided an opportunity to explain, deny, or refute unfavorable and incorrect information gathered in an investigation, before the adjudication is final. He/she should receive a written summary of all derogatory information and be informed of the process for explaining, denying, or refuting unfavorable information.

(b) The adjudicating officials must not release the actual background investigative report to an individual. However, they may issue a written summary of the derogatory information.

(c) The individual who is the subject of a background investigation may request, to the extent permissible by law, a copy of the reports from the originating (Federal, State, or other Tribal) agency and challenge the accuracy and completeness of any information maintained by that agency.

(d) The results of an investigation cannot be used for any purpose other than to determine eligibility for employment in a position that involves regular contact with or control over Indian children.

(e) Investigative reports contain information of a highly personal nature and must be maintained confidentially and secured in locked files. Investigative reports must be seen only by those officials who, in performing their official duties, need to know the information contained in the report.

§ 136.416 When should the IHS deny employment or dismiss an employee?

The IHS must deny employment to an individual or dismiss an employee, when the duties and responsibilities of the position the individual person would hold or holds involve regular contact with or control over Indian children, and it has been adjudicated, pursuant to § 136.414 and § 136.415, that the individual has been found guilty of, or entered a plea of guilty or nolo contendere to, any felonious offense, or any of two or more misdemeanor offenses, under Federal, State or Tribal law involving a crime of violence; sexual assault, molestation, exploitation, contact, or prostitution; crimes against persons; or offenses committed against children. The IHS has the discretion to place such an individual in a position, if available, that does not involve regular contact with or control over Indian children, if a determination has been made that such placement would not put Indian children at risk and the individual would be able to perform the duties and responsibilities of this position.

§ 136.417 May the IHS hire individuals pending completion of a background investigation?

Pursuant to section 231 of the Crime Control Act of 1990, Pub. L. 101–647, 42 U.S.C. 13041, as amended by Pub. L. 102–190, the IHS may hire provisionally individuals as defined in these regulations, prior to the completion of a background investigation if, at all times prior to receipt of the background investigation during which children are in the care of the individual, the individual is within the sight and under the supervision of a staff person and a satisfactory background investigation has been completed on that staff person.

§ 136.418 What should the IHS do if an individual has been charged with an offense but the charge is pending or no disposition has been made by a court?

(a) The IHS may deny the applicant employment until the charge has been resolved.

(b) The IHS may deny the employee any on-the-job contact with children until the charge is resolved.

(c) The IHS may detail or reassign the employee to other duties that do not involve regular contact with children.

(d) The IHS may place the employee on indefinite suspension, in accordance with statutory and regulatory requirements, until the court has disposed of the charge.

PART 136a—INDIAN HEALTH

Subpart A—Purpose

Sec.
136a.1 Purpose of the regulations.
136a.2 Administrative instructions.

Subpart B—What Services Are Available and Who Is Eligible To Receive Care?

136a.10 Definitions.
136a.11 Services available.
136a.12 Persons to whom health services will be provided.
136a.13 Authorization for contract health services.
136a.14 Reconsideration and appeals.
136a.15 Health Service Delivery Areas.
136a.16 Beneficiary Identification Cards and verification of tribal membership.

Subpart C [Reserved]

Subpart D—Transition Provisions

136a.31 Transition period.
136a.32 Delayed implementation.

136a.33 Grace period.
136a.34 Care and treatment of people losing eligibility.

Subpart E—Preference in Employment

136a.41 Definitions.
136a.42 Appointment actions.
136a.43 Application procedure for preference eligibility.

Subpart F—Abortions and Related Medical Services in Indian Health Service Facilities and Indian Health Service Programs

136a.51 Applicability.
136a.52 Definitions.
136a.53 General rule.
136a.54 Life of the mother would be endangered.
136a.55 Drugs and devices and termination of ectopic pregnancies.
136a.56 Recordkeeping requirements.
136a.57 Confidentiality.

Subpart G—Residual Status

136.61 Payor of last resort.

AUTHORITY: Sec. 3, 68 Stat. 674; 42 U.S.C. 2003, 42 Stat. 208, sec. 1, 68 Stat. 674; 25 U.S.C. 13, 42 U.S.C. 2001, unless otherwise noted.

SOURCE: 64 FR 58318, 58319, Oct. 28, 1999, unless otherwise noted. Redesignated at 67 FR 35342, May 17, 2002.

EFFECTIVE DATE NOTE: At 64 FR 58318, 58319, Oct. 28, 1999, as corrected at 65 FR 53914, Sept. 6, 2000, subparts A–G of part 36 were redesignated as part 36a and suspended indefinitely, effective Oct. 28, 1999. At 67 FR 35342, May 17, 2002, part 36a was redesignated as part 136a and moved to subchapter M.

Subpart A—Purpose

§ 136a.1 Purpose of the regulations.

These regulations establish general principles and program requirements for carrying out the Indian health program.

[46 FR 40692, Aug. 11, 1981. Redesignated at 52 FR 35048, Sept. 16, 1987]

§ 136a.2 Administrative instructions.

The Service periodically issues administrative instructions to its officers and employees which are primarily found in the Indian Health Service Manual and the Area Office and Program Office supplements. These instructions are operating procedures to assist officers and employees in carrying out their responsibilities, and are not regulations establishing program requirements which are binding upon members of the general public.

[46 FR 40692, Aug. 11, 1981. Redesignated at 52 FR 35048, Sept. 16, 1987]

Subpart B—What Services Are Available and Who Is Eligible To Receive Care?

§ 136a.10 Definitions.

As used in this subpart:

Appropriate ordering official means, unless otherwise specified by contract with the health care facility or provider or by a contract with a tribe or tribal organization, the ordering official for the Service Unit in which the individual requesting contract health services or on whose behalf the services are requested, resides.

Area Director means the Director of an Indian Health Service Area Office designated for purposes for administration of Indian Health Service Programs.

Contract health services means health services provided at the expense of the Indian Health Service from public or private medical or hospital facilities other than those of the Service or those funded by the Service.

Emergency means any medical condition for which immediate medical attention is necessary to prevent the death or serious impairment of the health of an individual.

Health Service Delivery Area means a geographic area designated pursuant to § 36.15 of this subpart.

Indian tribe means any Indian tribe, band, nation, or other organized group or community, including any Alaska Native village or regional or village corporation as defined in or established pursuant to the Alaska Native Claims Settlement Act, 43 U.S.C. 1601 *et. seq.*, which is recognized as eligible for the special programs and services provided by the United States to Indians because of their status as Indians.

Reservation means any Federally recognized Indian tribe's reservation, Pueblo, or colony, including former reservations in Oklahoma, Alaska Native regions established pursuant to the Alaska Native Claims Settlement Act (43 U.S.C. 1601 *et seq.*), and Indian

allotments if considered reservation land by the Bureau of Indian Affairs.

Reside means living in a locality with the intent to make it a fixed and a permanent home. The following persons will be deemed residents of the Health Service Delivery Area:

(1) Students who are temporarily absent from the Health Service Delivery Area during full time attendance at programs of vocational, technical, or academic education including normal school breaks;

(2) Persons who are temporarily absent from the Health Service Delivery Area for purposes of travel or employment (such as seasonal or migratory workers);

(3) Indian children placed in foster care outside the Health Service Delivery Area by order of a court of competent jurisdiction and who were residents within the Health Service Delivery Area at the time of the court order.

Secretary means the Secretary of Health and Human Services and any other officer or employee of the Department of Health and Human Services to whom the authority involved has been delegated.

Service means the Indian Health Service.

Service Unit Director means the Director of Indian Health Service programs for a designated geographical or tribal area of responsibility or the equivalent official of a contractor administering an IHS program.

[52 FR 35048, Sept. 16, 1987, as amended at 55 FR 4609, Feb. 9, 1990]

§ 136a.11 Services available.

(a) *Type of services that may be available.* Services for the Indian community served by the local facilities and program may include hospital and medical care, dental care, public health nursing and preventive care including immunizations, and health examination of special groups such as school children.

(b) *Where services are available.* Available services will be provided at hospitals and clinics of the Service, and at contract facilities (including tribal facilities under contract with the Service).

(c) *Determination of what services are available.* The Service does not provide the same health services in each area served. The services provided to any particular Indian community will depend upon the facilities and services available from sources other than the Service and the financial and personnel resources made available to the Service.

(d) *Priorities when funds, facilities, or personnel are insufficient to provide the indicated volume of services.* Priorities for care and treatment, as among individuals who are within the scope of the program, will be determined on the basis of relative medical need and access to other arrangements for obtaining the necessary care.

[46 FR 40692, Aug. 11, 1981, as amended at 52 FR 35048, Sept. 16, 1987]

§ 136a.12 Persons to whom health services will be provided.

(a) Subject to the requirements of this subpart, the Indian Health Service will provide direct services at its facilities, and contract health services, as medically indicated, and to the extent that funds and resources allocated to the particular Health Service Delivery Area permit, to persons of Indian or Alaska Native descent who:

(1) Are members of a federally recognized Indian tribe; and

(2) Reside within a Health Service Delivery Area designated under § 36a.15; or

(3) Are not members of a federally recognized Indian tribe but are the natural minor children (18 years old or under) of a member of a Federally recognized tribe and reside within a Health Service Delivery Area designated under § 36a.15.

(b) Subject to the requirements of this subpart, the Indian Health Service will also provide direct services at its facilities and, except where otherwise provided, contract health services, as medically indicated and to the extent that funds and resources allocated to the particular Health Service Delivery Area permit, to people in the circumstances listed below:

(1) To persons who meet the eligibility criteria in paragraph (a) of this section except for the residency requirement, who formerly resided within a Health Service Delivery area designated under § 36a.15, and who present

themselves to any Indian Health Service or Indian Health Service funded facility (and to minor children of such persons if the children meet the eligibility criteria in paragraph (a) of this section except for the residency requirement). Contract health services may not be authorized for these individuals;

(2) To a non-Indian woman pregnant with an eligible Indian's child but only during the period of her pregnancy through post-partum (generally about 6 weeks after delivery). In cases where the woman is not married to the eligible Indian under applicable state or tribal law, paternity must be acknowledged in writing by the Indian or determined by order of a court of competent jurisdiction;

(3) To non-Indian members of an eligible Indian's household if the medical officer in charge determines that the health services are necessary to control acute infectious disease or a public health hazard; and

(4) To an otherwise eligible person for up to 90 days after the person ceases to reside in a Health Service Delivery Area when the Service Unit Director has been notified of the move.

(c) Contract health services will not be authorized when and to the extent that Indian Health Service or Indian Health Service funded facilities are available to provide the needed care. When funds are insufficient to provide the volume of contract health services needed by the service population, the Indian Health Service shall determine service priorities on the basis of medical need.

(d) The Indian Health Service may provide direct services at its facilities on a fee-for-service basis to persons who are not beneficiaries under paragraphs (a) and (b) of this section under a number of authorities including the following:

(1) In emergencies under section 322(b) of the Public Health Service Act, 42 U.S.C. 249(b), and 42 CFR 32.111 of the regulations;

(2) To Public Health Service and other Federal beneficiaries under Economy Act (31 U.S.C. 1535) arrangements to the extent that providing services does not interfere with or restrict the provision of services to Indian and Alaska Native beneficiaries; and

(3) To non-beneficiaries residing within the Health Service Delivery Area when approved by the tribe or tribes located on the reservation but only to the extent that providing services does not interfere with or restrict the provision of services to Indian and Alaska Native beneficiaries.

(Approved by the Office of Management and Budget under control number 0915–0107)

[52 FR 35048, Sept. 16, 1987, as amended at 55 FR 4609, Feb. 9, 1990; 65 FR 53914, Sept. 6, 2000]

§ 136a.13 Authorization for contract health services.

(a) No payment will be made for medical care and services obtained from non-Service providers or in non-Service facilities unless the applicable requirements of paragraphs (b) and (c) below have been met and a purchase order for the care and services has been issued by the appropriate ordering official to the medical care provider.

(b) In non-emergency cases, a sick or disabled Indian, or an individual or agency acting on behalf of the Indian, or the medical care provider shall, prior to the provision of medical care and services, notify the appropriate ordering official of the need for services and supply information that the ordering official deems necessary to determine the relative medical need for the services and the individual's eligibility. The requirement for notice prior to providing medical care and services under this paragraph may be waived by the ordering official if:

(1) Such notice and information is provided within 72 hours after the beginning of treatment or admission to a health care facility; and

(2) The ordering official determines that giving of notice prior to obtaining the medical care and services was impracticable or that other good cause exists for the failure to provide prior notice.

(c) In emergency cases, a sick or disabled Indian, or an individual or agency acting on behalf of the Indian, or the medical care provider shall, within 72 hours after the beginning of treatment for the condition or after admission to a health care facility notify the

appropriate ordering official of the fact of the admission or treatment, together with information necessary to determine the relative medical need for the services and the eligibility of the Indian for the services. The 72-hour period may be extended if the ordering official determines that notification within the prescribed period was impracticable or that other good cause exists for the failure to comply.

[43 FR 34654, Aug. 4, 1978. Redesignated at 52 FR 35048, Sept. 16, 1987]

§ 136a.14 Reconsideration and appeals.

(a) Any person who has applied for and been denied health services or eligibility by the Indian Health Service or by any contractor contracting to administer an Indian Health Service program or portion of a program, including tribes and tribal organizations contracting under the Indian Self-Determination Act, shall be notified of the denial in writing together with a statement of all the reasons for the denial. The notice shall advise the applicant that within 30 days from the receipt of the notice the applicant.

(b) If the original decision is affirmed on reconsideration, the applicant shall be so notified in writing and advised that an appeal may be taken to the area or program director within 30 days of receipt of the notice of the reconsidered decision. The appeal shall be in writing and shall set forth the grounds supporting the appeal.

(c) If the original or reconsidered decision is affirmed on appeal by the area or program director, the applicant shall be so notified in writing and advised that a further appeal may be taken to the Director, Indian Health Service, within 30 days of receipt of the notice. The appeal shall be in writing and shall set forth the grounds supporting the appeal. The decision of the Director, Indian Health Service, shall constitute final administrative action.

(Approved by the Office of Management and Budget under control number 0915–0107)

[43 FR 34654, Aug. 4, 1978. Redesignated and amended at 52 FR 35048, 35049, Sept. 16, 1987]

§ 136a.15 Health Service Delivery Areas.

(a) The Indian Health Service will designate and publish as a notice in the FEDERAL REGISTER specific geographic areas within the United States including Federal Indian reservations and areas surrounding those reservations as Health Service Delivery Areas.

(b) The Indian Health Service may, after consultation with all the Indian tribes affected, redesignate the boundaries of any Health Service Delivery Area followed by publication of a notice in the FEDERAL REGISTER. Any redesignation of a Health Service Delivery area will include the reservation, and those areas close to the reservation boundaries which can reasonably be considered part of the reservation service area based on consideration of the following factors:

(1) The number of persons residing in the off-reservation area who would be eligible under § 36a.12(a) (1) and (3).

(2) The number of persons residing in the off-reservation area who have traditionally received health services from the Indian Health Service and whose eligibility for services would be affected;

(3) The geographic proximity of the off-reservation area to the reservation; and

(4) Whether the Indians residing in the off-reservation area can be expected to need and to use health services provided by the Indian Health Service given the alternate resources (health facilities and payment sources) available and accessible to them.

(c) Notwithstanding paragraphs (a) and (b) of this section, the Indian Health Service may designate States, subdivisions of States such as counties or towns, or other identifiable geographic areas such as census divisions or zip code areas, as Health Service Delivery Areas where reservations are nonexistent, or so small and scattered and the eligible Indian population so widely dispersed that it is inappropriate to use reservations as the basis for defining the Health Service Delivery Area.

(d) Any Indian tribal government may request a change in the boundaries of the Health Service Delivery

Area. Such a request should be supported by documentation related to the factors for consideration set out in paragraph (b) of this section and shall include documentation of any consultation with or notification of other affected or nearby tribes. The request shall be submitted to the appropriate Area Director(s) who shall afford all Indian tribes affected the opportunity to express their views orally and in writing. The Area Director(s) shall then submit the request, including all comments, together with the Area's recommendation and independent findings or verification of the factors set out in paragraph (b) of this section, to the Indian Health Service Director or to the Director's designee for the Indian Health Service decision. The decision of the Indian Health Service Director or the Director's designee shall constitute final agency action on the tribe's request. Changes in the boundaries of Health Service Delivery Areas will be published in the FEDERAL REGISTER.

(Approved by the Office of Management and Budget under control number 0915–0107)

[52 FR 35049, Sept. 16, 1987, as amended at 65 FR 53914, Sept. 6, 2000]

§ 136a.16 Beneficiary Identification Cards and verification of tribal membership.

(a) The Indian Health Service will issue Beneficiary Identification Cards as evidence of beneficiary status to persons who are currently eligible for services under § 36a.12(a). Persons requesting Beneficiary Identification Cards must submit or have on file evidence satisfactory to the Indian Health Service of tribal membership and residence within a Health Service Delivery Area. The absence of a Beneficiary Identification Card will not preclude an otherwise eligible Indian from obtaining services though it may delay the administrative determination that an individual is eligible for services on a no charge basis.

(b) For establishing eligibility or obtaining a Beneficiary Identification Card, applicants must demonstrate that they are members of a federally recognized tribe. Membership in a federally recognized tribe is to be determined by the individual tribe or the Bureau of Indian Affairs. Therefore, the Indian Health Service will recognize two methods of demonstrating tribal membership:

(1) Documentation that the applicant meets the requirements of tribal membership as prescribed by the charter, articles of incorporation, or other legal instruments or traditional processes of the tribe and has been officially designated a tribal member by an authorized tribal official or body; or

(2) Certification of tribal enrollment or membership by the Secretary of the Interior acting through the Bureau of Indian Affairs.

(c) Demonstrating membership in a federally recognized tribe is the responsibility of the applicant. However, the Indian Health Service may consult with the appropriate tribe or the Bureau of Indian Affairs on outstanding questions regarding an applicant's tribal membership if the Indian Health Service has some documentation that it believes may be helpful to the tribe or the Bureau of Indian Affairs in making their determination.

(Approved by the Office of Management and Budget under control number 0915–0107)

[50 FR 35050, Sept. 16, 1987, as amended at 65 FR 53914, Sept. 6, 2000]

Subpart C [Reserved]

Subpart D—Transition Provisions

SOURCE: 52 FR 35050, Sept. 16, 1987, unless otherwise noted.

§ 136a.31 Transition period.

(a) The transition period for full implementation of the new eligibility regulations consists of three parts;

(1) A six month delayed implementation;

(2) A six month grace period; and

(3) A health care continuity period determined by medical factors.

§ 136a.32 Delayed implementation.

(a) The eligibility requirements in subparts A and B of this part become effective March 16, 1988.

(b) During the six month delayed implementation period the former eligibility regulations will apply.

§ 136a.33 Grace period.

(a) Upon the effective date referred to in § 36a.32(a), individuals who would lose their eligibility under the new eligilibity regulations published on September 16, 1987, and who have made use of an Indian Health Service of Indian Health Service funded service within three years prior to September 16, 1987 (date of publication of the new eligibility regulations) shall retain their eligibility for a six month grace period ending September 16, 1988. During this grace period such individual's eligibility will continue to be determined under the former regulations except that the new residency requirements established by subparts A and B must be met for the individual to be eligible.

(b) All individuals who receive services during the grace period based on paragraph (a) of this section and whose eligibility will terminate on September 16, 1988, shall be notified in writing that after September 16, 1988 they will no longer the eligible for services as Indian Health Service beneficiaries. Such written notice should include an explanation of their appeal rights as provided in § 36a.14 of the part. These patients shall be offered assistance in locating other health care providers and medical assistance programs.

[52 FR 35050, Sept. 16, 1987, as amended at 65 FR 53914, Sept. 6, 2000]

§ 136a.34 Care and treatment of people losing eligibility.

(a) Individuals who lose their eligibility on September 16, 1988, (end of the grace period) and on that date are actively undergoing treatment may still be provided services for a limited period in the following circumstances;

(1) Inpatients in IHS and IHS funded facilities and those receiving inpatient care under contract, including contract health services, may continue to receive such care and necessary follow-up services at Indian Health Service expense until the need for hospitalization and follow-up services has ended as determined by the responsible Indian Health Service or tribal physician, all other conditions being met including medical priorities;

(2) Those actively undergoing a course of outpatient treatment either in Indian Health Service and Indian Health Service funded facilities or through contract health services, termination of which would impair the health of the individual patient, may continue to receive the treatment at Indian Health Service expense for a reasonable length of time, until the course of treatment reaches a point where it may safely be terminated or the patient transferred to other providers as determined by the responsible Indian Health Service or tribal physician, all other conditions being met including medical priorities.

(3) Those under treatment for chronic degenerative conditions may be provided additional treatment at Indian Health Service expense for no longer than 1 year beyond the end of the grace period notwithstanding any determination that it was otherwise safe to transfer treatment to other providers, all other conditions being met including medical priorities.

(b) All patients receiving care under paragraph (a) of this section shall be notified in writing that, after discharge from care provided under any of the above circumstances, they will no longer be eligible for services as Indian Health Service beneficiaries. Such notice shall include an explanation of their appeal rights as provided in § 36a.14 of this part. These patients shall be offered assistance in locating other health care providers and medical assistance programs.

[52 FR 35050, Sept. 16, 1987, as amended at 65 FR 53914, Sept. 6, 2000]

Subpart E—Preference in Employment

AUTHORITY: 25 U.S.C. 44, 45, 46 and 472; Pub. L. 83–568, 42 U.S.C. 2003.

§ 136a.41 Definitions.

For purposes of making appointments to vacancies in all positions in the Indian Health Service a preference will be extended to persons of Indian descent who are:

(a) Members of any recognized Indian tribe now under Federal jurisdiction;

(b) Descendants of such members who were, on June 1, 1934, residing within the present boundaries of any Indian reservation;

(c) All others of one-half or more Indian blood of tribes indigenous to the United States;

(d) Eskimos and other aboriginal people of Alaska; or

(e) Until January 4, 1990 or until the Osage Tribe has formally organized, whichever comes first, a person of at least one-quarter degree Indian ancestry of the Osage Tribe of Indians, whose rolls were closed by an act of Congress.

[43 FR 29783, July 11, 1978, as amended at 54 FR 48246, Nov. 22, 1989]

§ 136a.42 Appointment actions.

(a) Preference will be afforded a person meeting any one of the definitions of § 36a.41 whether the placement in the position involves initial appointment, reappointment, reinstatement, transfer, reassignment, promotion, or any other personnel action intended to fill a vacancy.

(b) Preference eligibles may be given a schedule A excepted appointment under 5 CFR 213.3116(b)(8). If the individuals are within reach on a Civil Service Register, they may be given a competitive appointment.

[43 FR 29783, July 11, 1978, as amended at 65 FR 53914, Sept. 6, 2000]

§ 136a.43 Application procedure for preference eligibility.

To be considered a preference eligible, the person must submit with the employment application a Bureau of Indian Affairs certification that the person is an Indian as defined by § 36a.41 except that an employee of the Indian Health Service who has a certificate of preference eligibility on file in the Official Personnel Folder is not required to resubmit such proof but may instead include a statement on the application that proof of eligibility is on file in the Official Personnel Folder.

[43 FR 29783, July 11, 1978, as amended at 65 FR 53914, Sept. 6, 2000]

Subpart F—Abortions and Related Medical Services in Indian Health Service Facilities and Indian Health Service Programs

AUTHORITY: Sec. 1, 42 Stat. 208, 25 U.S.C. 13; sec. 1, 68 Stat. 674, 42 U.S.C. 2001; sec. 3, 68 Stat. 674, 42 U.S.C. 2003.

SOURCE: 47 FR 4018, Jan. 27, 1982, unless otherwise noted.

§ 136a.51 Applicability.

This subpart is applicable to the use of Federal funds in providing health services to Indians in accordance with the provisions of subparts A, B, C, H, I and J of this part.

§ 136a.52 Definitions.

As used in this subpart:

Physician means a doctor of medicine or osteopathy legally authorized to practice medicine and surgery at an Indian Health Service or tribally run facility, or by the State in which he or she practices.

§ 136a.53 General rule.

Federal funds may not be used to pay for or otherwise provide for abortions in the programs described in § 36a.51, except under the Circumstances discribed in § 36a.54.

[47 FR 4018, Jan. 27, 1982, as amended at 65 FR 53914, Sept. 6, 2000]

§ 136a.54 Life of the mother would be endangered.

Federal funds are available for an abortion when a physician has found and so certified in writing to the appropriate tribal or other contracting organization, or service unit or area director, that ''on the basis of my professional judgement the life of the mother would be endangered if the fetus were carried to term.'' The certification must contain the name and address of the patient.

§ 136a.55 Drugs and devices and termination of ectopic pregnancies.

Federal funds are available for drugs or devices to prevent implantation of the fertilized ovum, and for medical procedures necessary for the termination of an ectopic pregnancy.

§ 136a.56 Recordkeeping requirements.

Documents required by § 36a.54 must be maintained for three years pursuant to the retention and custodial requirements for records at 45 CFR 74.20 *et seq.*

[47 FR 4018, Jan. 27, 1982, as amended at 65 FR 53914, Sept. 6, 2000]

§ 136a.57 Confidentiality.

Information which is acquired in connection with the requirements of this subpart may not be disclosed in a form which permits the identification of an individual without the individual's consent, except as may be necessary for the health of the individual or as may be necessary for the Secretary to monitor Indian Health Service program activities. In any event, any disclosure shall be subject to appropriate safeguards which will minimize the likelihood of disclosures of personal information in identifiable form.

Subpart G—Residual Status

§ 136a.61 Payor of last resort.

(a) The Indian Health Service is the payor of last resort of persons defined as eligible for contract health services under these regulations, notwithstanding any State or local law or regulation to the contrary.

(b) Accordingly, the Indian Health Service will not be responsible for or authorize payment for contract health services to the extent that:

(1) The Indian is eligible for alternate resources, as defined in paragraph (c), or

(2) The Indian would be eligible for alternate resources if he or she were to apply for them, or

(3) The Indian would be eligible for alternate resources under State or local law or regulation but for the Indian's eligibility for contract health services, or other health services, from the Indian Health Service or Indian Health Service funded programs.

(c) *Alternate resources* means health care resources other than those of the Indian Health Service. Such resources include health care providers and institutions, and health care programs for the payment of health services including but not limited to programs under title XVIII and XIX of the Social Security Act (*i.e.*, Medicare, Medicaid), State or local health care programs and private insurance.

[55 FR 4609, Feb. 9, 1990]

PART 137—TRIBAL SELF-GOVERNANCE

Subpart A—General Provisions

Sec.
137.1 Authority, purpose and scope.
137.2 Congressional policy.
137.3 Effect on existing Tribal rights.
137.4 May Title V be construed to limit or reduce in any way the funding for any program, project, or activity serving an Indian Tribe under this or other applicable Federal law?
137.5 Effect of these regulations on Federal program guidelines, manual, or policy directives.
137.6 Secretarial policy.

Subpart B—Definitions

137.10 Definitions.

Subpart C—Selection of Indian Tribes for Participation in Self-Governance

137.15 Who may participate in Tribal Self-Governance?
137.16 What if more than 50 Indian Tribes apply to participate in self-governance?
137.17 May more than one Indian Tribe participate in the same compact and/or funding agreement?
137.18 What criteria must an Indian Tribe satisfy to be eligible to participate in self-governance?

PLANNING PHASE

137.20 What is required during the planning phase?
137.21 How does an Indian Tribe demonstrate financial stability and financial management capacity?
137.22 May the Secretary consider uncorrected significant and material audit exceptions identified regarding centralized financial and administrative functions?
137.23 For purposes of determining eligibility for participation in self-governance, may the Secretary consider any other information regarding the Indian Tribe's financial stability and financial management capacity?
137.24 Are there grants available to assist the Indian Tribe to meet the requirements to participate in self-governance?
137.25 Are planning and negotiation grants available?

137.26 Must an Indian Tribe receive a planning or negotiation grant to be eligible to participate in self-governance?

Subpart D—Self-Governance Compact

137.30 What is a self-governance compact?
137.31 What is included in a compact?
137.32 Is a compact required to participate in self-governance?
137.33 May an Indian Tribe negotiate a funding agreement at the same time it is negotiating a compact?
137.34 May a funding agreement be executed without negotiating a compact?
137.35 What is the term of a self-governance compact?

Subpart E—Funding Agreements

137.40 What is a funding agreement?
137.41 What PSFAs must be included in a funding agreement?
137.42 What Tribal shares may be included in a funding agreement?
137.43 May a Tribe negotiate and leave funds with IHS for retained services?

TERMS IN A FUNDING AGREEMENT

137.45 What terms must be included in a funding agreement?
137.46 May additional terms be included in a funding agreement?
137.47 Do any provisions of Title I apply to compacts, funding agreements, and construction project agreements negotiated under Title V of the Act?
137.48 What is the effect of incorporating a Title I provision into a compact or funding agreement?
137.49 What if a Self-Governance Tribe requests such incorporation at the negotiation stage of a compact or funding agreement?

TERM OF A FUNDING AGREEMENT

137.55 What is the term of a funding agreement?
137.56 Does a funding agreement remain in effect after the end of its term?
137.57 How is a funding agreement amended during the effective period of the funding agreement?

Subpart F—Statutorily Mandated Grants

137.60 May a statutorily mandated grant be added to a funding agreement?
137.65 May a Self-Governance Tribe receive statutorily mandated grant funding in an annual lump sum advance payment?
137.66 May a Self-Governance Tribe keep interest earned on statutorily mandated grant funds?
137.67 How may a Self-Governance Tribe use interest earned on statutorily mandated grant funds?
137.68 May funds from a statutorily mandated grant be added to a funding agreement be reallocated?
137.69 May a statutorily mandated grant program added to a funding agreement be redesigned?
137.70 Are the reporting requirements different for a statutorily mandated grant program added to a funding agreement?
137.71 May the Secretary and the Self-Governance Tribe develop separate programmatic reporting requirements for statutorily mandated grants?
137.72 Are Self-Governance Tribes and their employees carrying out statutorily mandated grant programs added to a funding agreement covered by the Federal Tort Claims Act (FTCA)?
137.73 What provisions of Title V apply to statutorily mandated grants added to the funding agreement?

Subpart G—Funding

GENERAL

137.75 What funds must the Secretary transfer to a Self-Governance Tribe in a funding agreement?
137.76 When must the Secretary transfer to a Self-Governance Tribe funds identified in a funding agreement?
137.77 When must the Secretary transfer funds that were not paid as part of the initial lump sum payment?
137.78 May a Self-Governance Tribe negotiate a funding agreement for a term longer or shorter than one year?
137.79 What funds must the Secretary include in a funding agreement?

PROHIBITIONS

137.85 Is the Secretary prohibited from failing or refusing to transfer funds that are due to a Self-Governance Tribe under Title V?
137.86 Is the Secretary prohibited from reducing the amount of funds required under Title V to make funding available for self-governance monitoring or administration by the Secretary?
137.87 May the Secretary reduce the amount of funds due under Title V in subsequent years?
137.88 May the Secretary reduce the amount of funds required under Title V to pay for Federal functions, including Federal pay costs, Federal employee retirement benefits, automated data processing, technical assistance, and monitoring of activities under the Act?
137.89 May the Secretary reduce the amount of funds required under Title V to pay for costs of Federal personnel displaced by contracts under Title I or self-governance under Title V?

137.90 May the Secretary increase the funds required under the funding agreement?

ACQUISITION OF GOODS AND SERVICES FROM THE IHS

137.95 May a Self-Governance Tribe purchase goods and services from the IHS on a reimbursable basis?

PROMPT PAYMENT ACT

137.96 Does the Prompt Payment Act apply to funds transferred to a Self-Governance Tribe in a compact or funding agreement?

INTEREST OR OTHER INCOME ON TRANSFERS

137.100 May a Self-Governance Tribe retain and spend interest earned on any funds paid under a compact or funding agreement?
137.101 What standard applies to a Self-Governance Tribe's management of funds paid under a compact or funding agreement?

CARRYOVER OF FUNDS

137.105 May a Self-Governance Tribe carryover from one year to the next any funds that remain at the end of the funding agreement?

PROGRAM INCOME

137.110 May a Self-Governance Tribe retain and expend any program income earned pursuant to a compact and funding agreement?

LIMITATION OF COSTS

137.115 Is a Self-Governance Tribe obligated to continue performance under a compact or funding agreement if the Secretary does not transfer sufficient funds?

STABLE BASE BUDGET

137.120 May a Self-Governance Tribe's funding agreement provide for a stable base budget?
137.121 What funds may be included in a stable base budget amount?
137.122 May a Self-Governance Tribe with a stable base budget receive other funding under its funding agreement?
137.123 Once stable base funding is negotiated, do funding amounts change from year to year?
137.124 Does the effective period of a stable base budget have to be the same as the term of the funding agreement?

Subpart H—Final Offer

137.130 What is covered by this subpart?
137.131 When should a final offer be submitted?
137.132 How does the Indian Tribe submit a final offer?
137.133 What does a final offer contain?
137.134 When does the 45-day review period begin?
137.135 May the Secretary request and obtain an extension of time of the 45-day review period?
137.136 What happens if the agency takes no action within the 45-day review period (or any extensions thereof)?
137.137 If the 45-day review period or extension thereto, has expired, and the Tribe's offer is deemed accepted by operation of law, are there any exceptions to this rule?
137.138 Once the Indian Tribe's final offer has been accepted or deemed accepted by operation of law, what is the next step?

REJECTION OF FINAL OFFERS

137.140 On what basis may the Secretary reject an Indian Tribe's final offer?
137.141 How does the Secretary reject a final offer?
137.142 What is a ''significant danger'' or ''risk'' to the public health'?
137.143 How is the funding level to which the Indian Tribe is entitled determined?
137.144 Is technical assistance available to an Indian Tribe to avoid rejection of a final offer?
137.145 If the Secretary rejects a final offer, is the Secretary required to provide the Indian Tribe with technical assistance?
137.146 If the Secretary rejects all or part of a final offer, is the Indian Tribe entitled to an appeal?
137.147 Do those portions of the compact, funding agreement, or amendment not in dispute go into effect?
137.148 Does appealing the decision of the Secretary prevent entering into the compact, funding agreement or amendment?

Burden of Proof

137.150 What is the burden of proof in an appeal from rejection of a final offer?

DECISION MAKER

137.155 What constitutes a final agency action?

Subpart I—Operational Provisions

CONFLICTS OF INTEREST

137.160 Are Self-Governance Tribes required to address potential conflicts of interest?

AUDITS AND COST PRINCIPLES

137.165 Are Self-Governance Tribes required to undertake annual audits?
137.166 Are there exceptions to the annual audit requirements?

137.167 What cost principles must a Self-Governance Tribe follow when participating in self-governance under Title V?
137.168 May the Secretary require audit or accounting standards other than those specified in § 137.167?
137.169 How much time does the Federal Government have to make a claim against a Self-Governance Tribe relating to any disallowance of costs, based on an audit conducted under § 137.165?
137.170 When does the 365-day period commence?
137.171 Where do Self-Governance Tribes send their audit reports?
137.172 Should the audit report be sent anywhere else to ensure receipt by the Secretary?
137.173 Does a Self-Governance Tribe have a right of appeal from a disallowance?

RECORDS

137.175 Is a Self-Governance Tribe required to maintain a recordkeeping system?
137.176 Are Tribal records subject to the Freedom of Information Act and Federal Privacy Act?
137.177 Is the Self-Governance Tribe required to make its records available to the Secretary?
137.178 May Self-Governance Tribes store patient records at the Federal Records Centers?
137.179 May a Self-Governance Tribe make agreements with the Federal Records Centers regarding disclosure and release of the patient records stored pursuant to § 137.178?
137.180 Are there other laws that govern access to patient records?

REDESIGN

137.185 May a Self-Governance Tribe redesign or consolidate the PSFAs that are included in a funding agreement and reallocate or redirect funds for such PSFAs?

NON-DUPLICATION

137.190 Is a Self-Governance Tribe that receives funds under Title V also entitled to contract under section 102 of the Act [25 U.S.C. 450(f)] for such funds?

HEALTH STATUS REPORTS

137.200 Are there reporting requirements for Self-Governance Tribes under Title V?
137.201 What are the purposes of the Tribal reporting requirements?
137.202 What types of information will Self-Governance Tribes be expected to include in the reports?
137.203 May a Self-Governance Tribe participate in a voluntary national uniform data collection effort with the IHS?
137.204 How will this voluntary national uniform data set be developed?
137.205 Will this voluntary uniform data set reporting activity be required of all Self-Governance Tribes entering into a compact with the IHS under Title V?
137.206 Why does the IHS need this information?
137.207 Will funding be provided to the Self-Governance Tribe to compensate for the costs of reporting?

SAVINGS

137.210 What happens if self-governance activities under Title V reduce the administrative or other responsibilities of the Secretary with respect to the operation of Indian programs and result in savings?
137.211 How does a Self-Governance Tribe learn whether self-governance activities have resulted in savings as described in § 137.210.

ACCESS TO GOVERNMENT FURNISHED PROPERTY

137.215 How does a Self-Governance Tribe obtain title to real and personal property furnished by the Federal Government for use in the performance of a compact, funding agreement, construction project agreement, or grant agreement pursuant to section 512(c) of the Act [25 U.S.C. 458aaa–11(c)]?

MATCHING AND COST PARTICIPATION REQUIREMENTS

137.217 May funds provided under compacts, funding agreements, or grants made pursuant to Title V be treated as non-Federal funds for purposes of meeting matching or cost participation requirements under any other Federal or non-Federal program?

FEDERAL TORT CLAIMS ACT (FTCA)

137.220 Do section 314 of Public Law 101–512 [25 U.S.C. 450f note] and section 102(d) of the Act [25 U.S.C. 450f(d)] (regarding, in part, FTCA coverage) apply to compacts, funding agreements and construction project agreements?

Subpart J—Regulation Waiver

137.225 What regulations may be waived under Title V?
137.226 How does a Self-Governance Tribe request a waiver?
137.227 How much time does the Secretary have to act on a waiver request?
137.228 Upon what basis may the waiver request be denied?
137.229 What happens if the Secretary neither approves or denies a waiver request within the time specified in § 137.227.

137.230 Is the Secretary's decision on a waiver request final for the Department?
137.231 May a Self-Governance Tribe appeal the Secretary's decision to deny its request for a waiver of a regulation promulgated under section 517 of the Act [25 U.S.C. 458aaa–16]?

Subpart K—Withdrawal

137.235 May an Indian Tribe withdraw from a participating inter-Tribal consortium or Tribal organization?
137.236 When does a withdrawal become effective?
137.237 How are funds redistributed when an Indian Tribe fully or partially withdraws from a compact or funding agreement and elects to enter a contract or compact?
137.238 How are funds distributed when an Indian Tribe fully or partially withdraws from a compact or funding agreement administered by an inter-Tribal consortium or Tribal organization serving more than one Indian Tribe and the withdrawing Indian Tribe elects not to enter a contract or compact?
137.239 If the withdrawing Indian Tribe elects to operate PSFAs carried out under a compact or funding agreement under Title V through a contract under Title I, is the resulting contract considered a mature contract under section 4(h) of the Act [25 U.S.C. 450b(h)]?

Subpart L—Retrocession

137.245 What is retrocession ?
137.246 How does a Self-Governance Tribe retrocede a PSFA?
137.247 What is the effective date of a retrocession?
137.248 What effect will a retrocession have on a retroceding Self-Governance Tribe's rights to contract or compact under the Act?
137.249 Will retrocession adversely affect funding available for the retroceded program?
137.250 How are funds distributed when a Self-Governance Tribe fully or partially retrocedes from its compact or funding agreement?
137.251 What obligation does the retroceding Self-Governance Tribe have with respect to returning property that was provided by the Secretary under the compact or funding agreement and that was used in the operation of the retroceded program?

Subpart M—Reassumption

137.255 What does reassumption mean?
137.256 Under what circumstances may the Secretary reassume a program, service, function, or activity (or portion thereof)?
137.257 What steps must the Secretary take prior to reassumption becoming effective?
137.258 Does the Self-Governance Tribe have a right to a hearing prior to a non-immediate reassumption becoming effective?
137.259 What happens if the Secretary determines that the Self-Governance Tribe has not corrected the conditions that the Secretary identified in the notice?
137.260 What is the earliest date on which a reassumption can be effective?
137.261 Does the Secretary have the authority to immediately reassume a PSFA?
137.262 If the Secretary reassumes a PSFA immediately, when must the Secretary provide the Self-Governance Tribe with a hearing?
137.263 May the Secretary provide a grant to a Self-Governance Tribe for technical assistance to overcome conditions identified under § 137.257?
137.264 To what extent may the Secretary require the Self-Governance Tribe to return property that was provided by the Secretary under the compact or funding agreement and used in the operation of the reassume program?
137.265 May a Tribe be reimbursed for actual and reasonable close out costs incurred after the effective date of reassumption?

Subpart N—Construction

PURPOSE AND SCOPE

137.270 What is covered by this subpart?
137.271 Why is there a separate subpart in these regulations for construction project agreements?
137.272 What other alternatives are available for Self-Governance Tribes to perform construction projects?
137.273 What are IHS construction PSFAs?
137.274 Does this subpart cover construction programs?
137.275 May Self-Governance Tribes include IHS construction programs in a construction project agreement or in a funding agreement?

CONSTRUCTION DEFINITIONS

137.280 Construction definitions.

NEPA PROCESS

137.285 Are Self-Governance Tribes required to accept Federal environmental responsibilities to enter into a construction project agreement?
137.286 Do Self-Governance Tribes become Federal agencies when they assume these Federal environmental responsibilities?
137.287 What is the National Environmental Policy Act (NEPA)?
137.288 What is the National Historic Preservation Act (NHPA)?

137.289 What is a Federal undertaking under NHPA?
137.290 What additional provisions of law are related to NEPA and NHPA?
137.291 May Self-Governance Tribes carry out construction projects without assuming these Federal environmental responsibilities?
137.292 How do Self-Governance Tribes assume environmental responsibilities for construction projects under section 509 of the Act [25 U.S.C. 458aaa–8]?
137.293 Are Self-Governance Tribes required to adopt a separate resolution or take equivalent Tribal action to assume environmental responsibilities for each construction project agreement?
137.294 What is the typical IHS environmental review process for construction projects?
137.295 May Self-Governance Tribes elect to develop their own environmental review process?
137.296 How does a Self-Governance Tribe comply with NEPA and NHPA?
137.297 If the environmental review procedures of a Federal agency are adopted by a Self-Governance Tribe, is the Self-Governance Tribe responsible for ensuring the agency's policies and procedures meet the requirements of NEPA, NHPA, and related environmental laws?
137.298 Are Self-Governance Tribes required to comply with Executive Orders to fulfill their environmental responsibilities under section 509 of the Act [25 U.S.C. 458aaa–8]?
137.299 Are Federal funds available to cover the cost of Self-Governance Tribes carrying out environmental responsibilities?
137.300 Since Federal environmental responsibilities are new responsibilities which may be assumed by Tribes under section 509 of the Act [25 U.S.C. 458aaa–8], are there additional funds available to Self-Governance Tribes to carry out these formerly inherently Federal responsibilities?
137.301 How are project and program environmental review costs identified?
137.302 Are Federal funds available to cover start-up costs associated with initial Tribal assumption of environmental responsibilities?
137.303 Are Federal or other funds available for training associated with Tribal assumption of environmental responsibilities?
137.304 May Self-Governance Tribes buy back environmental services from the IHS?
137.305 May Self-Governance Tribes act as lead, cooperating, or joint lead agencies for environmental review purposes?
137.306 How are Self-Governance Tribes recognized as having lead, cooperating, or joint lead agency status?
137.307 What Federal environmental responsibilities remain with the Secretary when a Self-Governance Tribe assumes Federal environmental responsibilities for construction projects under section 509 of the Act [25 U.S.C. 458aaa–8]?
137.308 Does the Secretary have any enforcement authority for Federal environmental responsibilities assumed by Tribes under Section 509 of the Act?
137.309 How are NEPA and NHPA obligations typically enforced?
137.310 Are Self-Governance Tribes required to grant a limited waiver of their sovereign immunity to assume Federal environmental responsibilities under Section 509 of the Act [25 U.S.C. 458aaa–8]?
137.311 Are Self-Governance Tribes entitled to determine the nature and scope of the limited immunity waiver required under section 509(a)(2) of the Act?
137.312 Who is the proper defendant in a civil enforcement action under section 509(a)(2) of the Act [25 U.S.C. 458aaa–8(a)(2)]?

NOTIFICATION (PRIORITIZATION PROCESS, PLANNING, DEVELOPMENT AND CONSTRUCTION)

137.320 Is the Secretary required to consult with affected Indian Tribes concerning construction projects and programs?
137.321 How do Indian Tribes and the Secretary identify and request funds for needed construction projects?
137.322 Is the Secretary required to notify an Indian Tribe that funds are available for a construction project or a phase of a project?

PROJECT ASSUMPTION PROCESS

137.325 What does a Self-Governance Tribe do if it wants to perform a construction project under section 509 of the Act [25 U.S.C. 458aaa–8]?
137.326 What must a Tribal proposal for a construction project agreement contain?
137.327 May multiple projects be included in a single construction project agreement?
137.328 Must a construction project proposal incorporate provisions of Federal construction guidelines and manuals?
137.329 What environmental considerations must be included in the construction project agreement?
137.330 What happens if the Self-Governance Tribe and the Secretary cannot develop a mutually agreeable construction project agreement?
137.331 May the Secretary reject a final construction project proposal based on a determination of Tribal capacity or capability?
137.332 On what bases may the Secretary reject a final construction project proposal?

137.333 What procedures must the Secretary follow if the Secretary rejects a final construction project proposal, in whole or in part?
137.334 What happens if the Secretary fails to notify the Self-Governance Tribe of a decision to approve or reject a final construction project proposal within the time period allowed?
137.335 What costs may be included in the budget for a construction agreement?
137.336 What is the difference between fixed-price and cost-reimbursement agreements?
137.337 What funding must the Secretary provide in a construction project agreement?
137.338 Must funds from other sources be incorporated into a construction project agreement?
137.339 May the Self-Governance Tribe use project funds for matching or cost participation requirements under other Federal and non-Federal programs?
137.340 May a Self-Governance Tribe contribute funding to a project?
137.341 How will a Self-Governance Tribe receive payment under a construction project agreement?
137.342 What happens to funds remaining at the conclusion of a cost reimbursement construction project?
137.343 What happens to funds remaining at the conclusion of a fixed price construction project?
137.344 May a Self-Governance Tribe reallocate funds among construction project agreements?

ROLES OF SELF-GOVERNANCE TRIBE IN ESTABLISHING AND IMPLEMENTING CONSTRUCTION PROJECT AGREEMENTS

137.350 Is a Self-Governance Tribe responsible for completing a construction project in accordance with the negotiated construction project agreement?
137.351 Is a Self-Governance Tribe required to submit construction project progress and financial reports for construction project agreements?
137.352 What is contained in a construction project progress report?
137.353 What is contained in a construction project financial report?

ROLES OF THE SECRETARY IN ESTABLISHING AND IMPLEMENTING CONSTRUCTION PROJECT AGREEMENTS

137.360 Does the Secretary approve project planning and design documents prepared by the Self-Governance Tribe?
137.361 Does the Secretary have any other opportunities to approve planning or design documents prepared by the Self-Governance Tribe?
137.362 May construction project agreements be amended?
137.363 What is the procedure for the Secretary's review and approval of amendments?
137.364 What constitutes a significant change in the original scope of work?
137.365 What is the procedure for the Secretary's review and approval of project planning and design documents submitted by the Self-Governance Tribe?
137.366 May the Secretary conduct onsite project oversight visits?
137.367 May the Secretary issue a stop work order under a construction project agreement?
137.368 Is the Secretary responsible for oversight and compliance of health and safety codes during construction projects being performed by a Self-Governance Tribe under section 509 of the Act [25 U.S.C. 488aaa–8]?

OTHER

137.370 Do all provisions of this part apply to construction project agreements under this subpart?
137.371 Who takes title to real property purchased with funds provided under a construction project agreement?
137.372 Does the Secretary have a role in the fee-to-trust process when real property is purchased with construction project agreement funds?
137.373 Do Federal real property laws, regulations and procedures that apply to the Secretary also apply to Self-Governance Tribes that purchase real property with funds provided under a construction project agreement?
137.374 Does the Secretary have a role in reviewing or monitoring a Self-Governance Tribe's actions in acquiring or leasing real property with funds provided under a construction project agreement?
137.375 Are Tribally-owned facilities constructed under section 509 of the Act [25 U.S.C. 458aaa–8] eligible for replacement, maintenance, and improvement funds on the same basis as if title to such property were vested in the United States?
137.376 Are design and construction projects performed by Self-Governance Tribes under section 509 of the Act [25 U.S.C. 458aaa–8] subject to Federal metric requirements?
137.377 Do Federal procurement law and regulations apply to construction project agreements performed under section 509 of the Act [25 U.S.C. 458aaa–8]?
137.378 Does the Federal Davis-Bacon Act and wage rates apply to construction projects performed by Self-Governance Tribes using their own funds or other non-Federal funds?

137.379 Do Davis-Bacon wage rates apply to construction projects performed by Self-Governance Tribes using Federal funds?

Subpart O—Secretarial Responsibilities

BUDGET REQUEST

137.401 What role does Tribal consultation play in the IHS annual budget request process?

REPORTS

137.405 Is the Secretary required to report to Congress on administration of Title V and the funding requirements presently funded or unfunded?
137.406 In compiling reports pursuant to this section, may the Secretary impose any reporting requirements on Self-Governance Tribes, not otherwise provided in Title V?
137.407 What guidelines will be used by the Secretary to compile information required for the report?

Subpart P—Appeals

137.410 For the purposes of section 110 of the Act [25 U.S.C. 450m–1] does the term ''contract'' include compacts, funding agreements, and construction project agreements entered into under Title V?

POST-AWARD DISPUTES

137.412 Do the regulations at 25 CFR Part 900, Subpart N apply to compacts, funding agreements, and construction project agreements entered into under Title V?

PRE-AWARD DISPUTES

137.415 What decisions may an Indian Tribe appeal under §§ 137.415 through 137.436?
137.416 Do §§ 137.415 through 137.436 apply to any other disputes?
137.417 What procedures apply to Interior Board of Indian Appeals (IBIA) proceedings?
137.418 How does an Indian Tribe know where and when to file its appeal from decisions made by IHS?
137.419 What authority does the IBIA have under §§ 137.415 through 137.436?
137.420 Does an Indian Tribe have any options besides an appeal?
137.421 How does an Indian Tribe request an informal conference?
137.422 How is an informal conference held?
137.423 What happens after the informal conference?
137.424 Is the recommended decision from the informal conference final for the Secretary?
137.425 How does an Indian Tribe appeal the initial decision if it does not request an informal conference or if it does not agree with the recommended decision resulting from the informal conference?
137.426 May an Indian Tribe get an extension of time to file a notice of appeal?
137.427 What happens after an Indian Tribe files an appeal?
137.428 How is a hearing arranged?
137.429 What happens when a hearing is necessary?
137.430 What is the Secretary's burden of proof for appeals covered by § 137.145?
137.431 What rights do Indian Tribes and the Secretary have during the appeal process?
137.432 What happens after the hearing?
137.433 Is the recommended decision always final?
137.434 If an Indian Tribe objects to the recommended decision, what will the Secretary do?
137.435 Will an appeal adversely affect the Indian Tribe's rights in other compact, funding negotiations, or construction project agreements?
137.436 Will the decisions on appeal be available for the public to review?

APPEALS OF AN IMMEDIATE REASSUMPTION OF A SELF-GOVERNANCE PROGRAM

137.440 What happens in the case of an immediate reassumption under section 507(a)(2)(C) of the Act [25 U.S.C. 458aaa–6(a)(2)(C)]?
137.441 Will there be a hearing?
137.442 What happens after the hearing?
137.443 Is the recommended decision always final?
137.444 If a Self-Governance Tribe objects to the recommended decision, what action will the Secretary take?
137.445 Will an immediate reassumption appeal adversely affect the Self-Governance Tribe's rights in other self-governance negotiations?

EQUAL ACCESS TO JUSTICE ACT FEES

137.450 Does the Equal Access to Justice Act (EAJA) apply to appeals under this subpart?

AUTHORITY: 25 U.S.C. 458 *et seq.*

SOURCE: 67 FR 35342, May 17, 2002, unless otherwise noted.

Subpart A—General Provisions

§ 137.1 Authority, purpose and scope

(a) Authority. These regulations are prepared, issued and maintained with the active participation and representation of Indian Tribes, Tribal organizations and inter-Tribal consortia pursuant to the guidance of the negotiated rulemaking procedures required by section 517 of the Act [25 U.S.C. 458aaa–16].

(b) Purpose. These regulations codify rules for self-governance compacts, funding agreements, and construction project agreements between the Department of Health and Human Services (DHHS) and Self-Governance Tribes to implement sections 2, 3, and 4 of Pub. L. 106–260.

(c) Scope. These regulations are binding on the Secretary and on Indian Tribes carrying out programs, services, functions, and activities (or portions thereof) (PSFAs) under Title V except as otherwise specifically authorized by a waiver under section 512(b) of the Act [25 U.S.C. 458aaa–11(b)].

(d) Information collection. The information collection requirements have been submitted to the Office of Management and Budget (OMB) and are pending OMB approval.

§ 137.2 Congressional policy.

(a) According to section 2 of Pub. L. 106–260, Congress has declared that:

(1) The Tribal right of self-government flows from the inherent sovereignty of Indian Tribes and nations;

(2) The United States recognizes a special government-to-government relationship with Indian Tribes, including the right of the Indian Tribes to self-governance, as reflected in the Constitution, treaties, Federal statutes, and the course of dealings of the United States with Indian Tribes;

(3) Although progress has been made, the Federal bureaucracy, with its centralized rules and regulations, has eroded Tribal Self-Governance and dominates Tribal affairs.

(4) The Tribal Self-Governance Demonstration Project, established under title III of the Indian Self-Determination Act (ISDA) [25 U.S.C. 450f note] was designed to improve and perpetuate the government-to-government relationship between Indian Tribes and the United States and to strengthen Tribal control over Federal funding and program management;

(5) Although the Federal Government has made considerable strides in improving Indian health care, it has failed to fully meet its trust responsibilities and to satisfy its obligations to the Indian Tribes under treaties and other laws; and

(6) Congress has reviewed the results of the Tribal Self-Governance Demonstration Project and finds that transferring full control and funding to Tribal governments, upon Tribal request, over decision making for Federal PSFAs:

(i) Is an appropriate and effective means of implementing the Federal policy of government-to-government relations with Indian Tribes; and

(ii) Strengthens the Federal policy of Indian self-determination.

(b) According to section 3 of Pub. L. 106–260, Congress has declared its policy to:

(1) Permanently establish and implement Tribal Self-Governance within the DHHS;

(2) Call for full cooperation from the DHHS and its constituent agencies in the implementation of Tribal Self-Governance to—

(i) Enable the United States to maintain and improve its unique and continuing relationship with, and responsibility to, Indian Tribes;

(ii) Permit each Indian Tribe to choose the extent of its participation in self-governance in accordance with the provisions of the ISDA relating to the provision of Federal services to Indian Tribes;

(iii) Ensure the continuation of the trust responsibility of the United States to Indian Tribes and Indians;

(iv) Affirm and enable the United States to fulfill its obligations to the Indian Tribes under treaties and other laws;

(v) Strengthen the government-to-government relationship between the United States and Indian Tribes through direct and meaningful consultation with all Tribes;

(vi) Permit an orderly transition from Federal domination of programs and services to provide Indian Tribes with meaningful authority, control, funding, and discretion to plan, conduct, redesign, and administer PSFAs that meet the needs of the individual Tribal communities;

(vii) Provide for a measurable parallel reduction in the Federal bureaucracy as programs, services, functions, and activities (or portion thereof) are assumed by Indian Tribes;

(viii) Encourage the Secretary to identify all PSFAs of the DHHS that may be managed by an Indian Tribe under this Act and to assist Indian Tribes in assuming responsibility for such PSFAs; and

(ix) Provide Indian Tribes with the earliest opportunity to administer PSFAs from throughout the Department.

(c) According to section 512(a) of the Act [25 U.S.C. 458aaa–11(a)], Congress has declared, except as otherwise provided by law, the Secretary shall interpret all Federal laws, Executive Orders, and regulations in a manner that will facilitate:

(1) The inclusion of PSFAs and funds associated therewith, in the agreements entered into under this section;

(2) The implementation of compacts and funding agreements entered into under this title; and

(3) The achievement of Tribal health goals and objectives.

(d) According to section 512(f) of the Act [25 U.S.C. 458aaa–11(f)], Congress has declared that each provision of Title V and each provision of a compact or funding agreement shall be liberally construed for the benefit of the Indian Tribe participating in and any ambiguity shall be resolved in favor of the Indian Tribe.

(e) According to section 515(b) of the Act [25 U.S.C. 458aaa–14(b)], Congress has declared that nothing in the Act shall be construed to diminish in any way the trust responsibility of the United States to Indian Tribes and individual Indians that exists under treaties, Executive orders, or other laws and court decisions.

(f) According to section 507(g) of the Act [25 U.S.C. 458aaa–6(g)], Congress has declared that the Secretary is prohibited from waiving, modifying, or diminishing in any way the trust responsibility of the United States with respect to Indian Tribes and individual Indians that exists under treaties, Executive orders, other laws, or court decisions.

(g) According to section 515(c) of the Act [25 U.S.C. 458aaa–14(c)], Congress has declared that the Indian Health Service (IHS) under this Act shall neither bill nor charge those Indians who may have the economic means to pay for services, nor require any Tribe to do so. Nothing in this section shall impair the right of the IHS or an Indian Tribe to seek recovery from third parties section 206 of the Indian Health Care Improvement Act [25 U.S.C. 1621e], under section 1 of the Federal Medical Care Recovery Act [42 U.S.C. 2651], and any other applicable Federal, State or Tribal law.

(h) According to section 507(e) of the Act [25 U.S.C. 458aaa–6(e)], Congress has declared that in the negotiation of compacts and funding agreements the Secretary shall at all times negotiate in good faith to maximize implementation of the self-governance policy. The Secretary shall carry out Title V in a manner that maximizes the policy of Tribal Self-Governance, and in a manner consistent with the purposes specified in section 3 of the Act.

§ 137.3 Effect on existing Tribal rights.

Nothing in this part shall be construed as:

(a) Affecting, modifying, diminishing, or otherwise impairing the sovereign immunity from suit enjoyed by Indian Tribes;

(b) Terminating, waiving, modifying, or reducing the trust responsibility of the United States to the Indian Tribe(s) or individual Indians. The Secretary must act in good faith in upholding this trust responsibility;

(c) Mandating an Indian Tribe to apply for a compact(s) or grant(s) as described in the Act; or

(d) Impeding awards by other Departments and agencies of the United States to Indian Tribes to administer Indian programs under any other applicable law.

§ 137.4 May Title V be construed to limit or reduce in any way the funding for any program, project, or activity serving an Indian Tribe under this or other applicable Federal law?

No, if an Indian Tribe alleges that a compact or funding agreement violates section 515(a) of the Act [25 U.S.C. 458aaa–14(a)], the Indian Tribe may apply the provisions of section 110 of the Act [25 U.S.C. 450m–1].

§ 137.5 Effect of these regulations on Federal program guidelines, manual, or policy directives.

Unless expressly agreed to by the Self-Governance Tribe in the compact or funding agreement, the Self-Governance Tribe shall not be subject to any agency circular, policy, manual, guidance, or rule adopted by the IHS, except for the eligibility provisions of section 105(g) of the Act [25 U.S.C. 450j(g)] and regulations promulgated under section 517 of the Act [25 U.S.C. 458aaa–16(e)].

§ 137.6 Secretarial policy.

In carrying out Tribal self-governance under Title V, the Secretary recognizes the right of Tribes to self-government and supports Tribal sovereignty and self-determination. The Secretary recognizes a unique legal relationship with Tribal governments as set forth in the Constitution of the United States, treaties, statutes, Executive Orders, and court decisions. The Secretary supports the self-determination choices of each Tribe and will continue to work with all Tribes on a government-to-government basis to address issues concerning Tribal self-determination.

Subpart B—Definitions

§ 137.10 Definitions.

Unless otherwise provided in this part:

Act means sections 1 through 9 and Titles I and V of the Indian Self-Determination and Education Assistance Act of 1975, Public Law 93–638, as amended.

Appeal means a request by an Indian Tribe for an administrative review of an adverse decision by the Secretary.

Compact means a legally binding and mutually enforceable written agreement, including such terms as the parties intend shall control year after year, that affirms the government-to-government relationship between a Self-Governance Tribe and the United States.

Congressionally earmarked competitive grants as used in section 505(b)(1) of the Act [25 U.S.C. 458aaa–4(b)(1)] means statutorily mandated grants as defined in this section and used in subpart H of this part.

Contract means a self-determination contract as defined in section 4(j) of the Act [25 U.S.C. 450b].

Days means calendar days; except where the last day of any time period specified in these regulations falls on a Saturday, Sunday, or a Federal holiday, the period shall carry over to the next business day unless otherwise prohibited by law.

Department means the Department of Health and Human Services.

Director means the Director of the Indian Health Service.

Funding agreement means a legally binding and mutually enforceable written agreement that identifies the PSFAs that the Self-Governance Tribe will carry out, the funds being transferred from the Service Unit, Area, and Headquarter's levels in support of those PSFAs and such other terms as are required, or may be agreed upon, pursuant to Title V.

Gross mismanagement means a significant, clear, and convincing violation of a compact, funding agreement, or regulatory or statutory requirements applicable to Federal funds transferred to an Indian Tribe by a compact or funding agreement that results in a significant reduction of funds available for the PSFAs assumed by a Self-Governance Tribe.

IHS means Indian Health Service.

IHS discretionary grant means a grant established by IHS pursuant to the IHS' discretionary authority without any specific statutory directive.

Indian means a person who is a member of an Indian Tribe.

Indian Tribe means any Indian Tribe, band, nation, or other organized group, or community, including pueblos, rancherias, colonies, and any Alaska Native Village, or regional or village corporation as defined in or established pursuant to the Alaska Native Claims Settlement Act, which is recognized as eligible for the special programs and services provided by the United States to Indians because of their status as Indians; provided that in any case in which an Indian Tribe has authorized another Indian Tribe, an inter-Tribal consortium, or a Tribal organization to

plan for or carry out programs, services, functions, or activities (or portions thereof) on its behalf under Title V, the authorized Indian Tribe, inter-Tribal consortium or Tribal organization shall have the rights and responsibilities of the authorizing Indian Tribe (except as otherwise provided in the authorizing resolution or in this part). In such event, the term ''Indian Tribe'' as used in this part includes such other authorized Indian Tribe, inter-Tribal consortium, or Tribal organization.

Indirect costs shall have the same meaning as it has in 25 CFR 900.6 as applied to compacts, funding agreements and construction project agreements entered into under this part.

Inherent Federal functions means those Federal functions which cannot legally be delegated to Indian Tribes.

Inter-Tribal consortium means a coalition of two or more separate Indian Tribes that join together for the purpose of participating in self-governance, including Tribal organizations.

OMB means the Office of Management and Budget.

PSFA means programs, services, functions, and activities (or portions thereof).

Real property means any interest in land together with the improvements, structures, and fixtures and appurtenances thereto.

Reassumption means rescission, in whole or part, of a funding agreement and assuming or resuming control or operation of the PSFAs by the Secretary without consent of the Self-Governance Tribe.

Retained Tribal share means those funds that are available as a Tribal share but which the Self-Governance Tribe elects to leave with the IHS to administer.

Retrocession means the voluntary return to the Secretary of a self-governance program, service, function or activity (or portion thereof) for any reason, before or on the expiration of the term of the funding agreement.

Secretary means the Secretary of Health and Human Services (and his or her respective designees.)

Self-Governance means the program of self-governance established under section 502 of the Act [25 U.S.C. 458aaa–1].

Self-Governance Tribe means an Indian Tribe participating in the program of self-governance pursuant to section 503(a) of the Act [25 U.S.C. 458aaa–2(a)] or selected and participating in self-governance pursuant to section 503(b) of the Act [25 U.S.C. 458aaa–2(b)].

Statutorily mandated grant as used in this section and subpart F of this part means a grant specifically designated in a statute for a defined purpose.

Title I means sections 1 through 9 and Title I of the Indian Self-Determination and Education Assistance Act of 1975, Pub. L. 93–638, as amended.

Title V means Title V of the Indian Self-Determination and Education Assistance Act of 1975, Pub. L. 93–638, as amended.

Tribal organization means the recognized governing body of any Indian Tribe; any legally established organization of Indians which is controlled, sanctioned, or chartered by such governing body or which is democratically elected by the adult members of the Indian community to be served by such organization and which includes the maximum participation of Indians in all phases of its activities; provided, that in any case where a contract or compact is entered into, or a grant is made, to an organization to perform services benefitting more than one Indian Tribe, the approval of each such Indian Tribe shall be a prerequisite to the entering into or making of such contract, compact, or grant.

Tribal Self-Governance Advisory Committee means the Committee established by the Director of IHS that consists of Tribal representatives from each of the IHS Areas participating in Self-Governance, and that provides advocacy and policy guidance for implementation of Tribal Self-Governance within IHS.

Tribal share means an Indian Tribe's portion of all funds and resources that support secretarial PSFAs that are not required by the Secretary for the performance of inherent Federal functions.

Subpart C—Selection of Indian Tribes for Participation in Self-Governance

§ 137.15 Who may participate in Tribal Self-Governance?

Those Self-Governance Tribes described in 503(a) of the Act [25 U.S.C. 458aaa–2(a)] participating in the Title III Tribal Self-Governance Demonstration Project and up to 50 additional Indian Tribes per year that meet the criteria in § 137.18 may participate in self-governance.

§ 137.16 What if more than 50 Indian Tribes apply to participate in self-governance?

The first Indian Tribes who apply and are determined to be eligible shall have the option to participate in self-governance. Any Indian Tribe denied participation due to the limitation in number of Indian Tribes that may take part is entitled to participate in the next fiscal year, provided the Indian Tribe continues to meet the financial stability and financial management capacity requirements.

§ 137.17 May more than one Indian Tribe participate in the same compact and/or funding agreement?

Yes, Indian Tribes may either:

(a) Each sign the same compact and/or funding agreement, provided that each one meets the criteria to participate in self-governance and accepts legal responsibility for all financial and administrative decisions made under the compact or funding agreement, or

(b) Authorize another Indian Tribe to participate in self-governance on their behalf.

§ 137.18 What criteria must an Indian Tribe satisfy to be eligible to participate in self-governance?

To be eligible to participate in self-governance, an Indian Tribe must have:

(a) Successfully completed the planning phase described in § 137.20;

(b) Requested participation in self-governance by resolution or other official action by the governing body of each Indian Tribe to be served; and

(c) Demonstrated, for three fiscal years, financial stability and financial management capability.

PLANNING PHASE

§ 137.20 What is required during the planning phase?

The planning phase must be conducted to the satisfaction of the Indian Tribe and must include:

(a) legal and budgetary research; and

(b) internal Tribal government planning and organizational preparation relating to the administration of health programs.

§ 137.21 How does an Indian Tribe demonstrate financial stability and financial management capacity?

The Indian Tribe provides evidence that, for the three years prior to participation in self-governance, the Indian Tribe has had no uncorrected significant and material audit exceptions in the required annual audit of the Indian Tribe's self-determination contracts or self-governance funding agreements with any Federal agency.

§ 137.22 May the Secretary consider uncorrected significant and material audit exceptions identified regarding centralized financial and administrative functions?

Yes, if the Indian Tribe chooses to centralize its self-determination or self-governance financial and administrative functions with non-self-determination or non-self-governance financial and administrative functions, such as personnel, payroll, property management, etc., the Secretary may consider uncorrected significant and material audit exceptions related to the integrity of a cross-cutting centralized function in determining the Indian Tribe's eligibility for participation in the self-governance program.

§ 137.23 For purposes of determining eligibility for participation in self-governance, may the Secretary consider any other information regarding the Indian Tribe's financial stability and financial management capacity?

No, meeting the criteria set forth in §§ 137.21 and 137.22, shall be conclusive evidence of the required stability and

capability to participate in self-governance.

§ 137.24 Are there grants available to assist the Indian Tribe to meet the requirements to participate in self-governance?

Yes, any Indian Tribe may apply, as provided in § 137.25, for a grant to assist it to:

(a) Plan to participate in self-governance; and

(b) Negotiate the terms of the compact and funding agreement between the Indian Tribe and Secretary.

§ 137.25 Are planning and negotiation grants available?

Subject to the availability of funds, IHS will annually publish a notice of the number of planning and negotiation grants available, an explanation of the application process for such grants, and the criteria for award. Questions may be directed to the Office of Tribal Self-Governance.

§ 137.26 Must an Indian Tribe receive a planning or negotiation grant to be eligible to participate in self-governance?

No, an Indian Tribe may use other resources to meet the planning requirement and to negotiate.

Subpart D—Self-Governance compact

§ 137.30 What is a self-governance compact?

A self-governance compact is a legally binding and mutually enforceable written agreement that affirms the government-to-government relationship between a Self-Governance Tribe and the United States.

§ 137.31 What is included in a compact?

A compact shall include general terms setting forth the government-to-government relationship consistent with the Federal Government's trust responsibility and statutory and treaty obligations to Indian Tribes and such other terms as the parties intend to control from year to year.

§ 137.32 Is a compact required to participate in self-governance?

Yes, Tribes must have a compact in order to participate in self-governance.

§ 137.33 May an Indian Tribe negotiate a funding agreement at the same time it is negotiating a compact?

Yes, at an Indian Tribe's option, a funding agreement may be negotiated prior to or at the same time as the negotiation of a compact.

§ 137.34 May a funding agreement be executed without negotiating a compact?

No, a compact is a separate document from a funding agreement, and the compact must be executed before or at the same time as a funding agreement.

§ 137.35 What is the term of a self-governance compact?

Upon approval and execution of a self-governance compact, the compact remains in effect for so long as permitted by Federal law or until terminated by mutual written agreement or retrocession or reassumption of all PSFAs.

Subpart E—Funding Agreements

§ 137.40 What is a funding agreement?

A funding agreement is a legally binding and mutually enforceable written agreement that identifies the PSFAs that the Self-Governance Tribe will carry out, the funds being transferred from service unit, area and headquarters levels in support of those PSFAs and such other terms as are required or may be agreed upon pursuant to Title V.

§ 137.41 What PSFAs must be included in a funding agreement?

At the Self-Governance Tribe's option, all PSFAs identified in and in accordance with section 505(b) of the Act must be included in a funding agreement, subject to section 507(c) of the Act [25 U.S.C. 458aaa–6(c)].

§ 137.42 What Tribal shares may be included in a funding agreement?

All Tribal shares identified in sections 505(b)(1) [25 U.S.C. 458aaa–4(b)(1)]

and 508(c) of the Act [25 U.S.C. 458aaa–7(c)] may be included in a funding agreement, including Tribal shares of IHS discretionary grants.

§ 137.43 May a Tribe negotiate and leave funds with IHS for retained services?

Yes, at the discretion of the Self-Governance Tribe, Tribal shares may be left, in whole or in part, with IHS for certain PSFAs. These shares are referred to as a ''retained Tribal shares.''

TERMS IN A FUNDING AGREEMENT

§ 137.45 What terms must be included in a funding agreement?

A funding agreement must include terms required under section 505(d) of the Act [25 U.S.C. 458aaa–4(d)] and provisions regarding mandatory reporting and reassumption pursuant to section 507(a) of the Act [25 U.S.C. 458aaa–6(a)], unless those provisions have been included in a compact.

§ 137.46 May additional terms be included in a funding agreement?

Yes, at the Self-Governance Tribe's option, additional terms may be included as set forth in sections 506 [25 U.S.C. 458aaa–5] and 516(b) of the Act [25 U.S.C. 458aaa–15(b)]. In addition, any other terms to which the Self-Governance Tribe and the Secretary agree may be included.

§ 137.47 Do any provisions of Title I apply to compacts, funding agreements, and construction project agreements negotiated under Title V of the Act?

(a) Yes, the provisions of Title I listed in section 516(a) of the Act [25 U.S.C. 458aaa–15(a)] and section 314 of Pub. L. 101–512, as amended, [25 U.S.C. 450f note] mandatorily apply to a compact, funding agreement and construction project agreement to the extent they are not in conflict with Title V. In addition, at the option of a Self-Governance Tribe, under section 516(b) of the Act [25 U.S.C. 458aaa–15(b)] any provisions of Title I may be included in the compact or funding agreement.

(b) The provisions of Title I referenced in section 516(a) of the Act [25 U.S.C. 458aaa–15(a)] are sections 5 [25 U.S.C. 450c], 6 [25 U.S.C. 450d], 7 [25 U.S.C. 450e], 102(c) and (d) [25 U.S.C. 450f(c) and (d)], 104 [25 U.S.C. 450i], 105(k) and (l) [25 U.S.C. 450j(k) and (l)], 106(a) through (k) [25 U.S.C. 450j–1(a) through (k)], and 111 [25 U.S.C. 450n] of the Act.

§ 137.48 What is the effect of incorporating a Title I provision into a compact or funding agreement?

The incorporated Title I provision shall have the same force and effect as if it were set out in full in Title V.

§ 137.49 What if a Self-Governance Tribe requests such incorporation at the negotiation stage of a compact or funding agreement?

In that event, such incorporation shall be deemed effective immediately and shall control the negotiation and resulting compact and funding agreement.

TERM OF A FUNDING AGREEMENT

§ 137.55 What is the term of a funding agreement?

A funding agreement shall have the term mutually agreed to by the parties. Absent notification from an Indian Tribe that it is withdrawing or retroceding the operation of one or more PSFAs identified in the funding agreement, the funding agreement shall remain in full force and effect until a subsequent funding agreement is executed.

§ 137.56 Does a funding agreement remain in effect after the end of its term?

Yes, the provisions of a funding agreement, including all recurring increases received and continuing eligibility for other increases, remain in full force and effect until a subsequent funding agreement is executed. Upon execution of a subsequent funding agreement, the provisions of such a funding agreement are retroactive to the end of the term of the preceding funding agreement.

§ 137.57 How is a funding agreement amended during the effective period of the funding agreement?

A funding agreement may be amended by the parties as provided for in the

funding agreement, Title V, or this part.

Subpart F—Statutorily Mandated Grants

§ 137.60 May a statutorily mandated grant be added to a funding agreement?

Yes, in accordance with section 505(b)(2) of the Act [25 U.S.C. 458aaa–4(b)(2)], a statutorily mandated grant may be added to the funding agreement after award.

§ 137.65 May a Self-Governance Tribe receive statutorily mandated grant funding in an annual lump sum advance payment?

Yes, grant funds shall be added to the funding agreement as an annual lump sum advance payment after the grant is awarded.

§ 137.66 May a Self-Governance Tribe keep interest earned on statutorily mandated grant funds?

Yes, a Self-Governance Tribe may keep Interest Earned on Statutorily Mandated Grant Funds.

§ 137.67 How may a Self-Governance Tribe use interest earned on statutorily mandated grant funds?

Interest earned on such funds must be used to enhance the grant program including allowable administrative costs.

§ 137.68 May funds from a statutorily mandated grant added to a funding agreement be reallocated?

No, unless it is permitted under the statute authorizing the grant or under the terms and conditions of the grant award, funds from a statutorily mandated grant may not be reallocated.

§ 137.69 May a statutorily mandated grant program added to a funding agreement be redesigned?

No, unless it is permitted under the statute authorizing the grant or under the terms and conditions of the grant award, a program added to a funding agreement under a statutorily mandated grant may not be redesigned.

§ 137.70 Are the reporting requirements different for a statutorily mandated grant program added to a funding agreement?

Yes, the reporting requirements for a statutorily mandated grant program added to a funding agreement are subject to the terms and conditions of the grant award.

§ 137.71 May the Secretary and the Self-Governance Tribe develop separate programmatic reporting requirements for statutorily mandated grants?

Yes, the Secretary and the Self-Governance Tribe may develop separate programmatic reporting requirements for statutorily mandated grants.

§ 137.72 Are Self-Governance Tribes and their employees carrying out statutorily mandated grant programs added to a funding agreement covered by the Federal Tort Claims Act (FTCA)?

Yes, Self-Governance Tribes and their employees carrying out statutorily mandated grant programs are added to a funding agreement covered by the FTCA. Regulations governing coverage under the FTCA are published at 25 CFR Part 900, Subpart M.

§ 137.73 What provisions of Title V apply to statutorily mandated grants added to the funding agreement?

None of the provisions of Title V apply.

Subpart G—Funding

GENERAL

§ 137.75 What funds must the Secretary transfer to a Self-Governance Tribe in a funding agreement?

Subject to the terms of any compact or funding agreement, the Secretary must transfer to a Tribe all funds provided for in the funding agreement, pursuant to section 508(c) of the Act [25 U.S.C. 458aaa–7(c)] and § 137.80. The Secretary shall provide funding for periods covered by joint resolution adopted by Congress making continuing appropriations, to the extent permitted by such resolutions.

§ 137.76 When must the Secretary transfer to a Self-Governance Tribe funds identified in a funding agreement?

When a funding agreement requires an annual transfer of funding to be made at the beginning of a fiscal year, or requires semiannual or other periodic transfers of funding to be made commencing at the beginning of a fiscal year, the first such transfer shall be made not later than 10 days after the apportionment of such funds by the OMB to the Department, unless the funding agreement provides otherwise.

§ 137.77 When must the Secretary transfer funds that were not paid as part of the initial lump sum payment?

The Secretary must transfer any funds that were not paid in the initial lump sum payment within 10 days after distribution methodologies and other decisions regarding payment of those funds have been made by the IHS.

§ 137.78 May a Self-Governance Tribe negotiate a funding agreement for a term longer or shorter than one year?

Yes, upon Tribal request, the Secretary must negotiate a funding agreement for a term longer or shorter than a year. All references in these regulations to funding agreements shall also include funding agreements for a term longer or shorter than one year.

§ 137.79 What funds must the Secretary include in a funding agreement?

The Secretary must include funds in a funding agreement in an amount equal to the amount that the Self-Governance Tribe would have been entitled to receive in a contract under Title I, including amounts for direct program costs specified under section 106(a)(1) of the Act and amounts for contract support costs specified under section 106(a)(2), (3), (5), and (6) of the Act [25 U.S.C. 450j–1(a)(2), (3), (5) and (6)]. In addition, the Secretary shall include any funds that are specifically or functionally related to the provision by the Secretary of services and benefits to the Self-Governance Tribe or its members, all without regard to the organizational level within the Department where such functions are carried out.

PROHIBITIONS

§ 137.85 Is the Secretary prohibited from failing or refusing to transfer funds that are due to a Self-Governance Tribe under Title V?

Yes, sections 508(d)(1)(A) and (B) of the Act [25 U.S.C. 458aaa–7(d)(1)(A) and (B)] expressly prohibit the Secretary from:

(a) Failing or refusing to transfer to a Self-Governance Tribe its full share of any central, headquarters, regional, area, or service unit office or other funds due under Title V, except as required by Federal law, and

(b) From withholding portions of such funds for transfer over a period of years.

§ 137.86 Is the Secretary prohibited from reducing the amount of funds required under Title V to make funding available for self-governance monitoring or administration by the Secretary?

Yes, the Secretary is prohibited from reducing the amount of funds required under Title V to make funding available for self-governance monitoring or administration.

§ 137.87 May the Secretary reduce the amount of funds due under Title V in subsequent years?

No, in accordance with section 508(d)(1)(C)(ii) of the Act [25 U.S.C. 458aaa–7(d)(1)(C)(ii)], the Secretary is prohibited from reducing the amount of funds required under Title V in subsequent years, except pursuant to:

(a) A reduction in appropriations from the previous fiscal year for the program or function to be included in a compact or funding agreement;

(b) A Congressional directive in legislation or accompanying report;

(c) A Tribal authorization;

(d) A change in the amount of pass-through funds subject to the terms of the funding agreement; or

(e) Completion of a project, activity, or program for which such funds were provided.

§ 137.88 May the Secretary reduce the amount of funds required under Title V to pay for Federal functions, including Federal pay costs, Federal employee retirement benefits, automated data processing, technical assistance, and monitoring of activities under the Act?

No, the Secretary may not reduce the amount of funds required under Title V to pay for Federal functions, including Federal pay costs, Federal employee retirement benefits, automated data processing, technical assistance, and monitoring of activities under the Act.

§ 137.89 May the Secretary reduce the amount of funds required under Title V to pay for costs of Federal personnel displaced by contracts under Title I or Self-Governance under Title V?

No, the Secretary may not reduce the amount of funds required under Title V to pay for costs of Federal personnel displaced by contracts under Title I or Self-Governance under Title V.

§ 137.90 May the Secretary increase the funds required under the funding agreement?

Yes, the Secretary may increase the funds required under the funding agreement. However, the Self-Governance Tribe and the Secretary must agree to any transfer of funds to the Self-Governance Tribe unless otherwise provided for in the funding agreement.

ACQUISITION OF GOODS AND SERVICES FROM THE IHS

§ 137.95 May a Self-Governance Tribe purchase goods and services from the IHS on a reimbursable basis?

Yes, a Self-Governance Tribe may choose to purchase from the IHS any goods and services transferred by the IHS to a Self-Governance Tribe in a compact or funding agreement. The IHS shall provide any such goods and services to the Self-Governance Tribe, on a reimbursable basis, including payment in advance with subsequent adjustment.

PROMPT PAYMENT ACT

§ 137.96 Does the Prompt Payment Act apply to funds transferred to a Self-Governance Tribe in a compact or funding agreement?

Yes, the Prompt Payment Act, 39 U.S.C. section 3901 *et seq.*, applies to the transfer of all funds due under a compact or funding agreement authorized pursuant to Title V. See also § 137.76 through 137.78 and 137.341(f).

INTEREST OR OTHER INCOME ON TRANSFERS

§ 137.100 May a Self-Governance Tribe retain and spend interest earned on any funds paid under a compact or funding agreement?

Yes, pursuant to section 508(h) of the Act [25 U.S.C. 458aaa–7(h)], a Self-Governance Tribe may retain and spend interest earned on any funds paid under a compact or funding agreement.

§ 137.101 What standard applies to a Self-Governance Tribe's management of funds paid under a compact or funding agreement?

A Self-Governance Tribe is under a duty to invest and manage the funds as a prudent investor would, in light of the purpose, terms, distribution requirements, and provisions in the compact or funding agreement and Title V. This duty requires the exercise of reasonable care, skill, and caution, and is to be applied to investments not in isolation but in the context of the investment portfolio and as a part of an overall investment strategy, which should incorporate risk and return objectives reasonably suitable to the Self-Governance Tribe. In making and implementing investment decisions, the Self-Governance Tribe has a duty to diversify the investments unless, under the circumstances, it is prudent not to do so. In addition, the Self-Governance Tribe must:

(a) Conform to fundamental fiduciary duties of loyalty and impartiality;

(b) Act with prudence in deciding whether and how to delegate authority and in the selection and supervision of agents; and

(c) Incur only costs that are reasonable in amount and appropriate to the

investment responsibilities of the Self-Governance Tribe.

CARRYOVER OF FUNDS

§ 137.105 May a Self-Governance Tribe carryover from one year to the next any funds that remain at the end of the funding agreement?

Yes, pursuant to section 508(i) of the Act, a Self-Governance Tribe may carryover from one year to the next any funds that remain at the end of the funding agreement.

PROGRAM INCOME

§ 137.110 May a Self-Governance Tribe retain and expend any program income earned pursuant to a compact and funding agreement?

All Medicare, Medicaid, or other program income earned by a Self-Governance Tribe shall be treated as supplemental funding to that negotiated in the funding agreement. The Self-Governance Tribe may retain all such income and expend such funds in the current year or in future years except to the extent that the Indian Health Care Improvement Act (25 U.S.C. 1601 *et seq.*) provides otherwise for Medicare and Medicaid receipts. Such funds shall not result in any offset or reduction in the amount of funds the Self-Governance Tribe is authorized to receive under its funding agreement in the year the program income is received or for any subsequent fiscal year.

LIMITATION OF COSTS

§ 137.115 Is a Self-Governance Tribe obligated to continue performance under a compact or funding agreement if the Secretary does not transfer sufficient funds?

No, if a Self-Governance Tribe believes that the total amount of funds provided for a specific PSFA in a compact or funding agreement is insufficient, the Self-Governance Tribe must provide reasonable written notice of such insufficiency to the Secretary. If the Secretary does not increase the amount of funds transferred under the funding agreement in a quantity sufficient for the Self-Governance Tribe to complete the PSFA, as jointly determined by the Self-Governance Tribe and the Secretary, the Self-Governance Tribe may suspend performance of the PSFA until such time as additional funds are transferred.

STABLE BASE BUDGET

§ 137.120 May a Self-Governance Tribe's funding agreement provide for a stable base budget?

Yes, at the option of a Self-Governance Tribe, a funding agreement may provide for a stable base budget, specifying the recurring funds to be transferred to a Self-Governance Tribe for a period specified in the funding agreement.

§ 137.121 What funds may be included in a stable base budget amount?

The stable base budget amount may include, at the option of the Self-Governance Tribe,

(a) Recurring funds available under section 106(a) of the Act [25 U.S.C. 450j–1] ;

(b) Recurring Tribal shares; and

(c) Any recurring funds for new or expanded PSFAs not previously assumed by the Self-Governance Tribe.

§ 137.122 May a Self-Governance Tribe with a stable base budget receive other funding under its funding agreement?

Yes, the funding agreement may include non-recurring funds, other recurring funds, and other funds the Self-Governance Tribe is entitled to include in a funding agreement that are not included in the stable base budget amount.

§ 137.123 Once stable base funding is negotiated, do funding amounts change from year to year?

Stable base funding amounts are subject to adjustment:

(a) Annually only to reflect changes in Congressional appropriations by sub-sub activity excluding earmarks;

(b) By mutual agreement of the Self-Governance Tribe and the Secretary; or

(c) As a result of full or partial retrocession or reassumption.

§ 137.124 Does the effective period of a stable base budget have to be the same as the term of the funding agreement?

No, the Self-Governance Tribe may provide in its funding agreement that the effective period of the stable base budget will be either longer or shorter than the term of the funding agreement.

Subpart H—Final Offer

§ 137.130 What is covered by this subpart?

This subpart explains the final offer process provided by the statute for resolving, within a specific timeframe, disputes that may develop in negotiation of compacts, funding agreements, or amendments thereof.

§ 137.131 When should a final offer be submitted?

A final offer should be submitted when the Secretary and an Indian Tribe are unable to agree, in whole or in part, on the terms of a compact or funding agreement (including funding levels).

§ 137.132 How does the Indian Tribe submit a final offer?

(a) A written final offer should be submitted:

(1) During negotiations to the agency lead negotiator *or*

(2) Thereafter to the Director.

(b) The document should be separate from the compact, funding agreement, or amendment and clearly identified as a ''Final Offer.''

§ 137.133 What does a final offer contain?

A final offer contains a description of the disagreement between the Secretary and the Indian Tribe and the Indian Tribe's final proposal to resolve the disagreement.

§ 137.134 When does the 45 day review period begin?

The 45 day review period begins from the date the IHS receives the final offer. Proof of receipt may include a date stamp, or postal return receipt, or hand delivery.

§ 137.135 May the Secretary request and obtain an extension of time of the 45 day review period?

Yes, the Secretary may request an extension of time before the expiration of the 45 day review period. The Indian Tribe may either grant or deny the Secretary's request for an extension. To be effective, any grant of extension of time must be in writing and be signed by the person authorized by the Indian Tribe to grant the extension before the expiration of the 45 day review period.

§ 137.136 What happens if the agency takes no action within the 45 day review period (or any extensions thereof)?

The final offer is accepted automatically by operation of law.

§ 137.137 If the 45 day review period or extension thereto, has expired, and the Tribes offer is deemed accepted by operation of law, are there any exceptions to this rule?

No, there are no exceptions to this rule if the 45 day review period or extension thereto, has expired, and the Tribe's offer is deemed accepted by operation of law.

§ 137.138 Once the Indian Tribe's final offer has been accepted or deemed accepted by operation of law, what is the next step?

After the Indian Tribe's final offer is accepted or deemed accepted, the terms of the Indian Tribe's final offer and any funds included therein, shall be added to the funding agreement or compact within 10 days of the acceptance or the deemed acceptance.

REJECTION OF FINAL OFFERS

§ 137.140 On what basis may the Secretary reject an Indian Tribe's final offer?

The Secretary may reject an Indian Tribe's final offer for one of the following reasons:

(a) the amount of funds proposed in the final offer exceeds the applicable funding level to which the Indian Tribe is entitled under the Act;

(b) the PSFA that is the subject of the final offer is an inherent Federal

function that cannot legally be delegated to an Indian Tribe;

(c) the Indian Tribe cannot carry out the PSFA in a manner that would not result in significant danger or risk to the public health; or

(d) the Indian Tribe is not eligible to participate in self-governance under section 503 of the Act [25 U.S.C. 458aaa–2].

§ 137.141 How does the Secretary reject a final offer?

The Secretary must reject a final offer by providing written notice to the Indian Tribe based on the criteria in § 137.140 not more than 45 days after receipt of a final offer, or within a longer time period as agreed by the Self-Governance Tribe consistent with this subpart.

§ 137.142 What is a "significant danger" or "risk" to the public health?

A significant danger or risk is determined on a case-by-case basis in accordance with section 507(c) of the Act [25 U.S.C. 458aaa–6(c)].

§ 137.143 How is the funding level to which the Indian Tribe is entitled determined?

The Secretary must provide funds under a funding agreement in an amount equal to the amount that the Indian Tribe would have been entitled to receive under self-determination contracts under this Act, including amounts for direct program costs specified under section 106(a)(1) of the Act [25 U.S.C. 450j–1(a)(1)] and amounts for contract support costs specified under section 106(a) (2), (3), (5), and (6) of the Act [25 U.S.C. 450j–1(a)(2), (3), (5) and (6)], including any funds that are specifically or functionally related to the provision by the Secretary of services and benefits to the Indian Tribe or its members, all without regard to the organizational level within the Department where such functions are carried out.

§ 137.144 Is technical assistance available to an Indian Tribe to avoid rejection of a final offer?

Yes, upon receiving a final offer, the Secretary must offer any necessary technical assistance, and must share all relevant information with the Indian Tribe in order to avoid rejection of a final offer.

§ 137.145 If the Secretary rejects a final offer, is the Secretary required to provide the Indian Tribe with technical assistance?

Yes, the Secretary must offer and, if requested by the Indian Tribe, provide additional technical assistance to overcome the stated grounds for rejection.

§ 137.146 If the Secretary rejects all or part of a final offer, is the Indian Tribe entitled to an appeal?

Yes, the Indian Tribe is entitled to appeal the decision of the Secretary, with an agency hearing on the record, and the right to engage in full discovery relevant to any issue raised in the matter. The procedures for appeals are found in subpart P of this part. Alternatively, at its option, the Indian Tribe has the right to sue pursuant to section 110 of the Act [25 U.S.C. 450m–1] in Federal district court to challenge the Secretary's decision.

§ 137.147 Do those portions of the compact, funding agreement, or amendment not in dispute go into effect?

Yes, subject to section 507(c)(1)(D) of the Act [25 U.S.C. 458aaa–6(c)(1)(D)].

§ 137.148 Does appealing the decision of the Secretary prevent entering into the compact, funding agreement, or amendment?

No, appealing the decision of the Secretary does not prevent entering into the compact, funding agreement, or amendment.

BURDEN OF PROOF

§ 137.150 What is the burden of proof in an appeal from rejection of a final offer?

With respect to any appeal, hearing or civil action, the Secretary shall have the burden of demonstrating by clear and convincing evidence the validity of the grounds for rejecting the final offer.

DECISION MAKER

§ 137.155 What constitutes a final agency action?

A final agency action shall consist of a written decision from the Department to the Indian Tribe either:

(a) By an official of the Department who holds a position at a higher organizational level within the Department than the level of the departmental agency in which the decision that is the subject of the appeal was made; or

(b) By an administrative judge.

Subpart I—Operational Provisions

CONFLICTS OF INTEREST

§ 137.160 Are Self-Governance Tribes required to address potential conflicts of interest?

Yes, self-Governance Tribes participating in self-governance under Title V must ensure that internal measures are in place to address conflicts of interest in the administration of self-governance PSFAs.

AUDITS AND COST PRINCIPLES

§ 137.165 Are Self-Governance Tribes required to undertake annual audits?

Yes, under the provisions of section 506(c) of the Act [25 U.S.C. 458aaa–5(c)], Self-Governance Tribes must undertake annual audits pursuant to the Single Audit Act, 31 U.S.C. 7501 *et seq.*

§ 137.166 Are there exceptions to the annual audit requirements?

Yes, the exceptions are described in 31 U.S.C. 7502 of the Single Audit Act.

§ 137.167 What cost principles must a Self-Governance Tribe follow when participating in self-governance under Title V?

A Self-Governance Tribe must apply the cost principles of the applicable OMB circular, except as modified by:

(a) Section 106 (k) of the Act [25 U.S.C. 450j–1],

(b) Other provisions of law, or

(c) Any exemptions to applicable OMB circulars subsequently granted by the OMB.

§ 137.168 May the Secretary require audit or accounting standards other than those specified in § 137.167?

No, no other audit or accounting standards shall be required by the Secretary.

§ 137.169 How much time does the Federal Government have to make a claim against a Self-Governance Tribe relating to any disallowance of costs, based on an audit conducted under § 137.165?

Any right of action or other remedy (other than those relating to a criminal offense) relating to any disallowance of costs is barred unless the Secretary provides notice of such a disallowance within 365 days from receiving any required annual agency single audit report or, for any period covered by law or regulation in force prior to enactment of the Single Agency Audit Act of 1984, any other required final audit report.

§ 137.170 When does the 365 day period commence?

For the purpose of determining the 365 day period, an audit report is deemed received on the date of actual receipt by the Secretary, at the address specified in § 137.172, if, within 60 days after receiving the audit report, the Secretary does not give notice of a determination by the Secretary to reject the single-agency audit report as insufficient due to non-compliance with chapter 75 of title 31, United States Code or noncompliance with any other applicable law.

§ 137.171 Where do Self-Governance Tribes send their audit reports?

(a) For fiscal years ending on or before June 30, 1996, the audit report must be sent to: National External Audit Review Center, Lucas Place Room 514, 323 W. 8th St., Kansas City, MO 64105.

(b) For fiscal years, beginning after June 30, 1996, the audit report must be sent to: Single Audit Clearinghouse, 1201 E. 10th St., Jeffersonville, IN 47132.

§ 137.172 Should the audit report be sent anywhere else to ensure receipt by the Secretary?

Yes, the Self-Governance Tribe should also send the audit report to: National External Audit Review Center, Lucas Place Room 514, 323 W. 8th St., Kansas City, MO 64105.

§ 137.173 Does a Self-Governance Tribe have a right of appeal from a disallowance?

Yes, the notice must set forth the right of appeal and hearing to the Interior Board of Contract Appeals, pursuant to section 110 of the Act [25 U.S.C. 450m–1].

RECORDS

§ 137.175 Is a Self-Governance Tribe required to maintain a recordkeeping system?

Yes. Tribes are required to maintain records and provide Federal agency access to those records as provided in § 137.177.

§ 137.176 Are Tribal records subject to the Freedom of Information Act and Federal Privacy Act?

No, except to the extent that a Self-Governance Tribe specifies otherwise in its compact or funding agreement, the records of the Self-Governance Tribe shall not be considered Federal records for purposes of chapter 5 of title 5, United States Code.

§ 137.177 Is the Self-Governance Tribe required to make its records available to the Secretary?

Yes, after 30 days advance written notice from the Secretary, the Self-Governance Tribe must provide the Secretary with reasonable access to such records to enable the Department to meet its minimum legal recordkeeping system requirements under sections 3101 through 3106 of title 44 United States Code.

§ 137.178 May Self-Governance Tribes store patient records at the Federal Records Centers?

Yes, at the option of a Self-Governance Tribe, patient records may be stored at Federal Records Centers to the same extent and in the same manner as other Department patient records in accordance with section 105(o) of the Act [25 U.S.C. 450j(o)].

§ 137.179 May a Self-Governance Tribe make agreements with the Federal Records Centers regarding disclosure and release of the patient records stored pursuant to § 137.178?

Yes, a Self-Governance Tribe may make agreements with the Federal Records Centers regarding disclosure and release of the patient records stored pursuant to § 137.178.

§ 137.180 Are there other laws that govern access to patient records?

Yes, a Tribe must consider the potential application of Tribal, Federal and state law and regulations that may apply to requests for access to Tribal patient records, such as the provisions 42 CFR 2.1–2.67 pertaining to records regarding drug and/or alcohol treatment.

REDESIGN

§ 137.185 May a Self-Governance Tribe redesign or consolidate the PSFAs that are included in a funding agreement and reallocate or redirect funds for such PSFAs?

Yes, a Self-Governance Tribe may redesign or consolidate PSFAs included in a funding agreement and reallocate or redirect funds for such PSFAs in any manner which the Self-Governance Tribe deems to be in the best interest of the health and welfare of the Indian community being served, only if the redesign or consolidation does not have the effect of denying eligibility for services to population groups otherwise eligible to be served under applicable Federal law.

NON-DUPLICATION

§ 137.190 Is a Self-Governance Tribe that receives funds under Title V also entitled to contract under section 102 of the Act [25 U.S.C. 450(f)] for such funds?

For the period for which, and to the extent to which, funding is provided under the compact or funding agreement, the Self-Governance Tribe is not entitled to contract with the Secretary for the same funds or PSFA under section 102 of the Act [25 U.S.C. 450f]. Such Self-Governance Tribe is eligible for

new programs on the same basis as other Indian Tribes.

HEALTH STATUS REPORTS

§ 137.200 Are there reporting requirements for Self-Governance Tribes under Title V?

Yes, compacts or funding agreements negotiated between the Secretary and a Self-Governance Tribe must include a provision that requires the Self-Governance Tribe to report on health status and services delivery. These reports may only impose minimal burdens on the Self-Governance Tribes.

§ 137.201 What are the purposes of the Tribal reporting requirements?

Tribal reports enable the Secretary to prepare reports required under Title V and to develop the budget request. The reporting requirements are not intended as a quality assessment or monitoring tool, although such provision may be included at the option of the Self-Governance Tribe. Under no circumstances will the reporting requirement include any confidential, proprietary or commercial information. For example, while staffing levels may be a part of a report, pay levels for the staff are considered confidential between the Self-Governance Tribe and the employee.

§ 137.202 What types of information will Self-Governance Tribes be expected to include in the reports?

Reports will be derived from existing minimal data elements currently collected by Self-Governance Tribes, and may include patient demographic and workload data. Not less than 60 days prior to the start of negotiations or a mutually agreed upon timeframe, the IHS will propose a list of recommended minimal data elements, along with justification for their inclusion, to be used as a basis for negotiating these requirements into the Self-Governance Tribe's compact or funding agreement.

§ 137.203 May a Self-Governance Tribe participate in a voluntary national uniform data collection effort with the IHS?

Yes, in order to advance Indian health advocacy efforts, each Self-Governance Tribe will be encouraged to participate, at its option, in national IHS data reporting activities such as Government Performance Results Act, epidemiologic and surveillance reporting.

§ 137.204 How will this voluntary national uniform data set be developed?

IHS will work with representatives of Self-Governance Tribes, in coordination with the Tribal Self Governance Advisory Committee (TSGAC), to develop a mutually-defined annual voluntary uniform subset of data that is consistent with Congressional intent, minimizes reporting burdens, and responds to the needs of the Self-Governance Tribe.

§ 137.205 Will this voluntary uniform data set reporting activity be required of all Self-Governance Tribes entering into a compact with the IHS under Title V?

No, to the extent that specific resources are available or have not otherwise been provided to Self-Governance Tribes for this purpose, and if the Self-Governance Tribes choose to participate, the IHS will provide resources, hardware, software, and technical assistance to the Self-Governance Tribes to facilitate data gathering to ensure data consistency and integrity under this voluntary effort.

§ 137.206 Why does the IHS need this information?

This information will be used to comply with sections 513 [25 U.S.C. 458aaa–12] and 514 [25 U.S.C. 458aaa–13] of the Act as well as to assist IHS in advocating for the Indian health system, budget formulation, and other reporting required by statute, development of partnerships with other organizations that benefit the health status of Indian Tribes, and sharing of best practices.

§ 137.207 Will funding be provided to the Self-Governance Tribe to compensate for the costs of reporting?

Yes, reporting requirements are subject to the Secretary providing specific funds for this purpose in the funding agreement.

SAVINGS

§ 137.210 What happens if self-governance activities under Title V reduce the administrative or other responsibilities of the Secretary with respect to the operation of Indian programs and result in savings?

To the extent that PSFAs carried out by Self-Governance Tribes under Title V reduce the administrative or other responsibilities of the Secretary with respect to the operation of Indian programs and result in savings that have not otherwise been included in the amount of Tribal shares and other funds determined under section 508(c) of the Act [25 U.S.C. 458aaa–7(c)], the Secretary must make such savings available to the Self-Governance Tribes, for the provision of additional services to program beneficiaries in a manner equitable to directly served, contracted, and compacted programs.

§ 137.211 How does a Self-Governance Tribe learn whether self-governance activities have resulted in savings as described in § 137.210.

The annual report prepared pursuant to section 514(b)(2) [25 U.S.C. 458aaa–13(b)(2)] of the Act must specifically identify any such savings.

ACCESS TO GOVERNMENT FURNISHED PROPERTY

§ 137.215 How does a Self-Governance Tribe obtain title to real and personal property furnished by the Federal Government for use in the performance of a compact, funding agreement, construction project agreement, or grant agreement pursuant to section 512(c) of the Act [25 U.S.C. 458aaa–11(c)]?

(a) For government-furnished real and personal property made available to a Self-Governance Tribe, the Self-Governance Tribe must take title to all real or personal property unless the Self-Governance Tribe requests that the United States retain the title.

(b) For government-furnished personal property made available to a Self-Governance Tribe:

(1) The Secretary, in consultation with each Self-Governance Tribe, must develop a list of the property used in a compact, funding agreement, or construction project agreement.

(2) The Self-Governance Tribe must indicate any items on the list to which the Self-Governance Tribe wants the Secretary to retain title.

(3) The Secretary must provide the Self-Governance Tribe with any documentation needed to transfer title to the remaining listed property to the Self-Governance Tribe.

(c) For government-furnished real property made available to a Self-Governance Tribe:

(1) The Secretary, in consultation with the Self-Governance Tribe, must develop a list of the property furnished for use in a compact, funding agreement, or construction project agreement.

(2) The Secretary must inspect any real property on the list to determine the presence of any hazardous substance activity, as defined in 41 CFR 101–47.202–2(b)(10).

(3) The Self-Governance Tribe must indicate on the list to the Secretary any items of real property to which the Self-Governance Tribe wants the Secretary to retain title and those items of property to which the Self-Governance Tribe wishes to obtain title. The Secretary must take such steps as necessary to transfer title to the Self-Governance Tribe those items of real property which the Self-Governance Tribe wishes to acquire.

MATCHING AND COST PARTICIPATION REQUIREMENTS

§ 137.217 May funds provided under compacts, funding agreements, or grants made pursuant to Title V be treated as non-Federal funds for purposes of meeting matching or cost participation requirements under any other Federal or non-Federal program?

Yes, funds provided under compacts, funding agreements, or grants made pursuant to Title V may be treated as non-Federal funds for purposes of meeting matching or cost participation requirements under any other Federal or non-Federal program.

FEDERAL TORT CLAIMS ACT (FTCA)

§ 137.220 Do section 314 of Public Law 101–512 [25 U.S.C. 450f note] and section 102(d) of the Act [25 U.S.C. 450f(d)] (regarding, in part, FTCA coverage) apply to compacts, funding agreements and construction project agreements?

Yes, regulations governing FTCA coverage are set out at 25 CFR Part 900, Subpart M.

Subpart J—Regulation Waiver

§ 137.225 What regulations may be waived under Title V?

A Self-Governance Tribe may request a waiver of regulation(s) promulgated under section 517 of the Act [25 U.S.C. 458aaa–16] or under the authorities specified in section 505(b) of the Act [25 U.S.C. 458aaa–4(b)] for a compact or funding agreement entered into with the IHS under Title V.

§ 137.226 How does a Self-Governance Tribe request a waiver?

A Self-Governance Tribe may request a waiver by submitting a written request to the Secretary identifying the applicable Federal regulation(s) sought to be waived and the basis for the request.

§ 137.227 How much time does the Secretary have to act on a waiver request?

The Secretary must either approve or deny the requested waiver in writing within 90 days after receipt by the Secretary.

§ 137.228 Upon what basis may the waiver request be denied?

A denial may be made only upon a specific finding by the Secretary that identified language in the regulation may not be waived because such waiver is prohibited by Federal law.

§ 137.229 What happens if the Secretary neither approves or denies a waiver request within the time specified in § 137.227?

The waiver request is deemed approved.

§ 137.230 Is the Secretary's decision on a waiver request final for the Department?

Yes, the Secretary's decision on a waiver request is final for the Department.

§ 137.231 May a Self-Governance Tribe appeal the Secretary's decision to deny its request for a waiver of a regulation promulgated under section 517 of the Act [25 U.S.C. 458aaa–16]?

The decision may not be appealed under these regulations but may be appealed by the Self-Governance Tribe in Federal Court under applicable law.

Subpart K—Withdrawal

§ 137.235 May an Indian Tribe withdraw from a participating inter-Tribal consortium or Tribal organization?

Yes, an Indian Tribe may fully or partially withdraw from a participating inter-Tribal consortium or Tribal organization its share of any PSFAs included in a compact or funding agreement.

§ 137.236 When does a withdrawal become effective?

A withdrawal becomes effective within the time frame specified in the resolution that authorizes withdrawal from the participating Tribal organization or inter-Tribal consortium. In the absence of a specific time frame set forth in the resolution, such withdrawal becomes effective on

(a) The earlier of 1 year after the date of submission of such request, or the date on which the funding agreement expires; or

(b) Such date as may be mutually agreed upon by the Secretary, the withdrawing Indian Tribe, and the participating Tribal organization or inter-Tribal consortium that has signed the compact or funding agreement on behalf of the withdrawing Indian Tribe, inter-Tribal consortium, or Tribal organization.

§ 137.237 How are funds redistributed when an Indian Tribe fully or partially withdraws from a compact or funding agreement and elects to enter a contract or compact?

When an Indian Tribe eligible to enter into a contract under Title I or a compact or funding agreement under Title V fully or partially withdraws from a participating inter-Tribal consortium or Tribal organization, and has proposed to enter into a contract or compact and funding agreement covering the withdrawn funds:

(a) The withdrawing Indian Tribe is entitled to its Tribal share of funds supporting those PSFAs that the Indian Tribe will be carrying out under its own contract or compact and funding agreement (calculated on the same basis as the funds were initially allocated in the funding agreement of the inter-Tribal consortium or Tribal organization); and

(b) the funds referred to in paragraph (a) of this section must be transferred from the funding agreement of the inter-Tribal consortium or Tribal organization, on the condition that the provisions of sections 102 [25 U.S.C. 450f] and 105(i) of the Act [25 U.S.C. 450j], as appropriate, apply to the withdrawing Indian Tribe.

§ 137.238 How are funds distributed when an Indian Tribe fully or partially withdraws from a compact or funding agreement administered by an inter-Tribal consortium or Tribal organization serving more than one Indian Tribe and the withdrawing Indian Tribe elects not to enter a contract or compact?

All funds not obligated by the inter-Tribal consortium or Tribal organization associated with the withdrawing Indian Tribe's returned PSFAs, less close out costs, shall be returned by the inter-Tribal consortium or Tribal organization to the IHS for operation of the PSFAs included in the withdrawal.

§ 137.239 If the withdrawing Indian Tribe elects to operate PSFAs carried out under a compact or funding agreement under Title V through a contract under Title I, is the resulting contract considered a mature contract under section 4(h) of the Act [25 U.S.C. 450b(h)]?

Yes, if the withdrawing Indian Tribe elects to operate PSFAs carried out under a compact or funding agreement under Title V through a contract under Title I, the resulting contract is considered a mature contract under section 4(h) of the Act [25 U.S.C. 450b(h)] at the option of the Indian Tribe.

Subpart L—Retrocession

§ 137.245 What is retrocession?

Retrocession means the return by a Self-Governance Tribe to the Secretary of PSFAs, that are included in a compact or funding agreement, for any reason, before the expiration of the term of the compact or funding agreement.

§ 137.246 How does a Self-Governance Tribe retrocede a PSFA?

The Self-Governance Tribe submits a written notice to the Director of its intent to retrocede. The notice must specifically identify those PSFAs being retroceded. The notice may also include a proposed effective date of the retrocession.

§ 137.247 What is the effective date of a retrocession?

Unless the request for retrocession is rescinded, the retrocession becomes effective within the timeframe specified by the parties in the compact or funding agreement. In the absence of a specification, the retrocession becomes effective on:

(a) The earlier of 1 year after:

(1) The date of submission of the request, or

(2) The date on which the funding agreement expires; or

(b) Whatever date is mutually agreed upon by the Secretary and the retroceding Self-Governance Tribe.

§ 137.248 What effect will a retrocession have on a retroceding Self-Governance Tribe's rights to contract or compact under the Act?

A retrocession request shall not negatively affect:

(a) Any other contract or compact to which the retroceding Self-Governance Tribe is a party;

(b) Any other contracts or compacts the retroceding Self-Governance Tribe may request; and

(c) Any future request by such Self-Governance Tribe or an Indian Tribe to compact or contract for the same program.

§ 137.249 Will retrocession adversely affect funding available for the retroceded program?

No, the Secretary shall provide no less than the same level of funding that would have been available if there had been no retrocession.

§ 137.250 How are funds distributed when a Self-Governance Tribe fully or partially retrocedes from its compact or funding agreement?

Any funds not obligated by the Self-Governance Tribe and associated with the Self-Governance Tribe's returned PSFAs, less close out costs, must be returned by the Self-Governance Tribe to IHS for operation of the PSFA's associated with the compact or funding agreement from which the Self-Governance Tribe retroceded in whole or in part.

§ 137.251. What obligation does the retroceding Self-Governance Tribe have with respect to returning property that was provided by the Secretary under the compact or funding agreement and that was used in the operation of the retroceded program?

On the effective date of any retrocession, the retroceding Self-Governance Tribe, shall, at the option of the Secretary, deliver to the Secretary all requested property and equipment provided by the Secretary under the compact or funding agreement, to the extent used to carry out the retroceded PSFAs, which at the time of retrocession has a per item current fair market value, less the cost of improvements borne by the Self-Governance Tribe in excess of $5,000 at the time of the retrocession.

Subpart M—Reassumption

§ 137.255 What does reassumption mean?

Reassumption means rescission by the Secretary without consent of the Self-Governance Tribe of PSFAs and associated funding in a compact or funding agreement and resuming responsibility to provide such PSFAs.

§ 137.256 Under what circumstances may the Secretary reassume a program, service, function, or activity (or portion thereof)?

(a) Subject to the steps in § 137.257, the Secretary may reassume a program, service, function, or activity (or portion thereof) and associated funding if the Secretary makes a specific finding relative to that PSFA of :

(1) Imminent endangerment of the public health caused by an act or omission of the Self-Governance Tribe, and the imminent endangerment arises out of a failure to carry out the compact or funding agreement; or

(2) Gross mismanagement with respect to funds transferred to the Self-Governance Tribe by a compact or funding agreement, as determined by the Secretary, in consultation with the Inspector General, as appropriate.

(b) Immediate reassumption may occur under additional requirements set forth in § 137.261.

§ 137.257 What steps must the Secretary take prior to reassumption becoming effective?

Except as provided in § 137.261 for immediate reassumption, prior to a reassumption becoming effective, the Secretary must:

(a) Notify the Self-Governance Tribe in writing by certified mail of the details of findings required under § 137.256(a)(1) and (2);

(b) Request specified corrective action within a reasonable period of time, which in no case may be less than 45 days;

(c) Offer and provide, if requested, the necessary technical assistance and advice to assist the Self-Governance Tribe to overcome the conditions that

led to the findings described under (a); and

(d) Provide the Self-Governance Tribe with a hearing on the record as provided under Subpart P of this part.

§ 137.258 Does the Self-Governance Tribe have a right to a hearing prior to a non-immediate reassumption becoming effective?

Yes, at the Self-Governance Tribe's request, the Secretary must provide a hearing on the record prior to or in lieu of the corrective action period identified in § 137.257(b).

§ 137.259 What happens if the Secretary determines that the Self-Governance Tribe has not corrected the conditions that the Secretary identified in the notice?

(a) The Secretary shall provide a second written notice by certified mail to the Self-Governance Tribe served by the compact or funding agreement that the compact or funding agreement will be rescinded, in whole or in part.

(b) The second notice shall include:

(1) The intended effective date of the reassumption;

(2) The details and facts supporting the intended reassumption; and

(3) Instructions that explain the Indian Tribe's right to a formal hearing within 30 days of receipt of the notice.

§ 137.260 What is the earliest date on which a reassumption can be effective?

Except as provided in § 137.261, no PSFA may be reassumed by the Secretary until 30 days after the final resolution of the hearing and any subsequent appeals to provide the Self-Governance Tribe with an opportunity to take corrective action in response to any adverse final ruling.

§ 137.261 Does the Secretary have the authority to immediately reassume a PSFA?

Yes, the Secretary may immediately reassume operation of a program, service, function, or activity (or portion thereof) and associated funding upon providing to the Self-Governance Tribe written notice in which the Secretary makes a finding:

(a) of imminent substantial and irreparable endangerment of the public health caused by an act or omission of the Indian Tribe; and

(b) the endangerment arises out of a failure to carry out the compact or funding agreement.

§ 137.262 If the Secretary reassumes a PSFA immediately, when must the Secretary provide the Self-Governance Tribe with a hearing?

If the Secretary immediately reassumes a PSFA, the Secretary must provide the Self-Governance Tribe with a hearing under Subpart P of this part not later than 10 days after such reassumption, unless the Self-Governance Tribe and the Secretary agree to an extension.

§ 137.263 May the Secretary provide a grant to a Self-Governance Tribe for technical assistance to overcome conditions identified under § 137.257?

Yes, the Secretary may make a grant for the purpose of obtaining technical assistance as provided in section 103 of the Act [25 U.S.C. 458aaa-h].

§ 137.264 To what extent may the Secretary require the Self-Governance Tribe to return property that was provided by the Secretary under the compact or funding agreement and used in the operation of the reassumed program?

On the effective date of any reassumption, the Self-Governance Tribe, shall, at the option of the Secretary and only to the extent requested by the Secretary, deliver to the Secretary property and equipment provided by the Secretary under the compact or funding agreement, to the extent the property was used to directly carry out the reassumed program, service, function, or activity (or portion thereof), provided that at the time of reassumption the property has a per item current fair market value, less the cost of improvements borne by the Self-Governance Tribe, in excess of $5,000 at the time of the reassumption.

§ 137.265 May a Tribe be reimbursed for actual and reasonable close out costs incurred after the effective date of reassumption?

Yes, a Tribe may be reimbursed for actual and reasonable close out costs

incurred after the effective date of reassumption.

Subpart N—Construction

PURPOSE AND SCOPE

§ 137.270 What is covered by this subpart?

This subpart covers IHS construction projects carried out under section 509 of the Act [25 U.S.C. 458aaa-8].

§ 137.271 Why is there a separate subpart in these regulations for construction project agreements?

Construction projects are separately defined in Title V and are subject to a separate proposal and review process. Provisions of a construction project agreement and this subpart shall be liberally construed in favor of the Self-Governance Tribe.

§ 137.272 What other alternatives are available for Self-Governance Tribes to perform construction projects?

Self-Governance Tribes also have the option of performing IHS construction projects under a variety of other legal authorities, including but not limited to Title I of the Act, the Indian Health Care Improvement Act, Public Law 94–437, and Public Law 86–121. This subpart does not cover projects constructed pursuant to agreements entered into under these authorities.

§ 137.273 What are IHS construction PSFAs?

IHS construction PSFAs are a combination of construction projects as defined in § 137.280 and construction programs.

§ 137.274 Does this subpart cover construction programs?

No, except as provided in § 137.275, this subpart does not cover construction programs such as the:

(a) Maintenance and Improvement Program;

(b) Construction program functions; and,

(c) Planning services and construction management services.

§ 137.275 May Self-Governance Tribes include IHS construction programs in a construction project agreement or in a funding agreement?

Yes, Self-Governance Tribes may choose to assume construction programs in a construction project agreement, in a funding agreement, or in a combination of the two. These programs may include the following:

(a) Maintenance and improvement program;

(b) Construction program functions; and

(c) Planning services and construction management services.

CONSTRUCTION DEFINITIONS

§ 137.280 Construction Definitions.

ALJ means administrative law judge.

APA means Administrative Procedures Act, 5 U.S.C. 701–706.

Budget means a statement of the funds required to complete the scope of work in a construction project agreement. For cost reimbursement agreements, budgets may be stated using broad categories such as planning, design, construction, project administration, and contingency. For fixed price agreements, budgets may be stated as lump sums, unit cost pricing, or a combination thereof.

Categorical exclusion means a category of actions that do not individually or cumulatively have a significant effect on the human environment and that have been found to have no such effect in procedures adopted by a Federal agency in implementation of these regulations and for which, therefore, neither an environmental assessment nor an environmental impact statement is required. Any procedures under this section shall provide for extraordinary circumstances in which a normally excluded action may have a significant environmental effect.

CEQ means Council on Environmental Quality in the Office of the President.

Construction management services (CMS) means activities limited to administrative support services; coordination; and monitoring oversight of the planning, design, and construction process. CMS activities typically include:

(1) Coordination and information exchange between the Self-Governance Tribe and the Federal Government;

(2) Preparation of a Self-Governance Tribe's project agreement; and

(3) A Self-Governance Tribe's subcontract scope of work identification and subcontract preparation, and competitive selection of construction contract subcontractors.

Construction phase is the phase of a construction project agreement during which the project is constructed, and includes labor, materials, equipment and services necessary to complete the work, in accordance with the construction project agreement.

Construction project means:

(1) An organized noncontinuous undertaking to complete a specific set of predetermined objectives for the planning, environmental determination, design, construction, repair, improvement, or expansion of buildings or facilities described in a project agreement, and

(2) Does not include construction program administration and activities described in sections 4(m)(1) through (3) of the Act [25 U.S.C. 4b(m)(1) through (3)], that may otherwise be included in a funding agreement under section 505 of the Act [25 U.S.C. 458aaa–4].

Construction project agreement means a negotiated agreement between the Secretary and a Self-Governance Tribe, that at a minimum:

(1) Establishes project phase start and completion dates;

(2) Defines a specific scope of work and standards by which it will be accomplished;

(3) Identifies the responsibilities of the Self-Governance Tribe and the Secretary;

(4) Addresses environmental considerations;

(5) Identifies the owner and operations and maintenance entity of the proposed work;

(6) Provides a budget;

(7) Provides a payment process; and

(8) Establishes the duration of the agreement based on the time necessary to complete the specified scope of work, which may be 1 or more years.

Design phase is the phase of a construction project agreement during which project plans, specifications, and other documents are prepared that are used to build the project. Site investigation, final site selection activities and environmental review and determination activities are completed in this phase if not conducted as a part of the planning phase.

Maintenance and improvement program:

(1) As used in this subpart means the program that provides funds for eligible facilities for the purpose of:

(i) Performing routine maintenance;

(ii) Achieving compliance with accreditation standards;

(iii) Improving and renovating facilities;

(iv) Ensuring that Indian health care facilities meet existing building codes and standards; and

(v) Ensuring compliance with public law building requirements.

(2) The maintenance and improvement program is comprised of routine maintenance and repair funding and project funding. Typical maintenance and improvement projects have historically been funded out of regional or national project pools and may include, but are not limited to, total replacement of a heating or cooling system, remodel of a medical laboratory, removal of lead based paint, abatement of asbestos and abatement of underground fuel storage tanks. Maintenance and repair program funding provided under a funding agreement is not covered under this subpart.

NEPA means the National Environmental Policy Act of 1969 [42 U.S.C. 4321 *et seq.*].

NHPA means the National Historic Preservation Act [16 U.S.C. 470 *et seq.*].

Planning phase is the phase of a construction project agreement during which planning services are provided.

Planning services may include performing a needs assessment, completing and/or verifying master plans, developing justification documents, conducting pre-design site investigations, developing budget cost estimates, conducting feasibility studies as needed, conducting environmental review activities and justifying the need for the project.

SHPO means State Historic Preservation Officer.

Scope of work or specific scope of work means a brief written description of the work to be accomplished under the construction project agreement, sufficient to confirm that the project is consistent with the purpose for which the Secretary has allocated funds.

THPO means Tribal Historic Preservation Officer.

NEPA PROCESS

§ 137.285 Are Self-Governance Tribes required to accept Federal environmental responsibilities to enter into a construction project agreement?

Yes, under section 509 of the Act [25 U.S.C. 458aaa–8], Self-Governance Tribes must assume all Federal responsibilities under the NEPA of 1969 [42 U.S.C. 4321 *et seq.*] and the National Historic Preservation Act [16 U.S.C. 470 *et seq.*] and related provisions of law that would apply if the Secretary were to undertake a construction project, but only those responsibilities directly related to the completion of the construction project being assumed.

§ 137.286 Do Self-Governance Tribes become Federal agencies when they assume these Federal environmental responsibilities?

No, while Self-Governance Tribes are required to assume Federal environmental responsibilities for projects in place of the Secretary, Self-Governance Tribes do not thereby become Federal agencies. However, because Self-Governance Tribes are assuming the responsibilities of the Secretary for the purposes of performing these Federal environmental responsibilities, Self-Governance Tribes will be considered the equivalent of Federal agencies for certain purposes as set forth in this subpart.

§ 137.287 What is the National Environmental Policy Act (NEPA)?

The NEPA is a procedural law that requires Federal agencies to follow established environmental review procedures, which include reviewing and documenting the environmental impact of their actions. NEPA establishes a comprehensive policy for protection and enhancement of the environment by the Federal Government; creates the Council on Environmental Quality in the Office of the President; and directs Federal agencies to carry out the policies and procedures of the Act. CEQ regulations (40 CFR 1500–1508) establish three levels of environmental review: categorical exclusions, environmental assessments, and environmental impact statements.

§ 137.288 What is the National Historic Preservation Act (NHPA)?

The NHPA requires Federal agencies to take into account the effects of their undertakings, such as construction projects, on properties covered by the NHPA, such as historic properties, properties eligible for listing on the National Register of Historic Places, or properties that an Indian Tribe regards as having religious and/or cultural importance. Section 106 of the NHPA [16 U.S.C. 470f] requires Federal agencies to afford the Advisory Council on Historic Preservation, acting through the SHPO or the THPO, a reasonable opportunity to comment on such undertakings.

§ 137.289 What is a Federal undertaking under NHPA?

The Advisory Council on Historic Preservation has defined a Federal undertaking in 36 CFR 800.16(y) as a project, activity, or program funded in whole or in part under the direct or indirect jurisdiction of a Federal agency, including those carried out by or on behalf of a Federal agency; those carried out with Federal financial assistance; those requiring a Federal permit, license or approval; and those subject to State or local regulation administered pursuant to a delegation or approval by a Federal agency.

§ 137.290 What additional provisions of law are related to NEPA and NHPA?

(a) Depending upon the nature and the location of the construction project, environmental laws related to NEPA and NHPA may include:

(1) Archaeological and Historical Data Preservation Act [16 U.S.C. 469];

(2) Archeological Resources Protection Act [16 U.S.C. 470aa];

(3) Clean Air Act [42 U.S.C. 7401];

(4) Clean Water Act [33 U.S.C. 1251];

(5) Coastal Barrier Improvement Act [42 U.S.C. 4028 and 16 U.S.C. Sec. 3501];

(6) Coastal Barrier Resources Act [16 U.S.C. 3501];

(7) Coastal Zone Management Act [16 U.S.C. 1451];

(8) Comprehensive Environmental Response, Compensation, and Liability Act [42 U.S.C. 9601];

(9) Endangered Species Act [16 U.S.C. 1531 *et seq.*];

(10) Farmland Protection Policy Act [7 U.S.C. 4201 *et seq.*];

(11) Marine Protection, Research, and Sanctuaries Act [33 U.S.C. 1401–1445; 16 U.S.C. 1431–1447F; 33 U.S.C. 2801–2805];

(12) National Historic Preservation Act [16 U.S.C. 470 *et seq.*];

(13) National Trails System Act [16 U.S.C. 1241];

(14) Native American Graves Protection and Repatriation Act [25 U.S.C. 3001];

(15) Noise Control Act [42 U.S.C.4901];

(16) Resource Conservation and Recovery Act [42 U.S.C. 6901];

(17) Safe Drinking Water Act [42 U.S.C. 300F];

(18) Toxic Substance Control Act [15 U.S.C. 2601];

(19) Wild and Scenic Rivers Act [16 U.S.C. 1271]; and

(20) Wilderness Act [16 U.S.C. 1131].

(b) This section provides a list of environmental laws for informational purposes only and does not create any legal rights or remedies, or imply private rights of action.

§ 137.291 May Self-Governance Tribes carry out construction projects without assuming these Federal environmental responsibilities?

Yes, but not under section 509 of the Act [25 U.S.C. 458aaa–8]. Self-Governance Tribes may otherwise elect to perform construction projects, or phases of construction projects, under other legal authorities (see § 137.272).

§ 137.292 How do Self-Governance Tribes assume environmental responsibilities for construction projects under section 509 of the Act [25 U.S.C. 458aaa–8]?

Self-Governance Tribes assume environmental responsibilities by:

(a) Adopting a resolution or taking an equivalent Tribal action which:

(1) Designates a certifying officer to represent the Self-Governance Tribe and to assume the status of a responsible Federal official under NEPA, NHPA, and related provisions of law; and

(2) Accepts the jurisdiction of the Federal court, as provided in § 137.310 and § 137.311 for purposes of enforcement of the Federal environmental responsibilities assumed by the Self-Governance Tribe; and

(b) Entering into a construction project agreement under section 509 of the Act [25 U.S.C. 458aaa–8].

§ 137.293 Are Self-Governance Tribes required to adopt a separate resolution or take equivalent Tribal action to assume environmental responsibilities for each construction project agreement?

No, the Self-Governance Tribe may adopt a single resolution or take equivalent Tribal action to assume environmental responsibilities for a single project, multiple projects, a class of projects, or all projects performed under section 509 of the Act [25 U.S.C. 458aaa–8].

§ 137.294 What is the typical IHS environmental review process for construction projects?

(a) Most IHS construction projects normally do not have a significant impact on the environment, and therefore do not require environmental impact statements (EIS). Under current IHS procedures, an environmental review is performed on all construction projects. During the IHS environmental review process, the following activities may occur:

(1) Consult with appropriate Tribal, Federal, state, and local officials and interested parties on potential environmental effects;

(2) Document assessment of potential environmental effects; (IHS has developed a form to facilitate this process.)

(3) Perform necessary environmental surveys and inventories;

(4) Consult with the Advisory Council on Historic Preservation, acting through the SHPO or THPO, to ensure compliance with the NHPA;

(5) Determine if extraordinary or exceptional circumstances exist that

would prevent the project from meeting the criteria for categorical exclusion from further environmental review under NEPA, or if an environmental assessment is required;

(6) Obtain environmental permits and approvals; and

(7) Identify methods to avoid or mitigate potential adverse effects;

(b) This section is for informational purposes only and does not create any legal rights or remedies, or imply private rights of action.

§ 137.295 May Self-Governance Tribes elect to develop their own environmental review process?

Yes, Self-Governance Tribes may develop their own environmental review process or adopt the procedures of the IHS or the procedures of another Federal agency.

§ 137.296 How does a Self-Governance Tribe comply with NEPA and NHPA?

Self-Governance Tribes comply with NEPA and the NHPA by adopting and following:

(a) their own environmental review procedures;

(b) the procedures of the IHS; and/or

(c) the procedures of another Federal agency.

§ 137.297 If the environmental review procedures of a Federal agency are adopted by a Self-Governance Tribe, is the Self-Governance Tribe responsible for ensuring the agency's policies and procedures meet the requirements of NEPA, NHPA, and related environmental laws?

No, the Federal agency is responsible for ensuring its own policies and procedures meet the requirements of NEPA, NHPA, and related environmental laws, not the Self-Governance Tribe.

§ 137.298 Are Self-Governance Tribes required to comply with Executive Orders to fulfill their environmental responsibilities under section 509 of the Act [25 U.S.C. 458aaa–8]?

No, but Self-Governance Tribes may at their option, choose to voluntarily comply with Executive Orders. For facilities where ownership will vest with the Federal Government upon completion of the construction, Tribes and the Secretary may agree to include the goals and objectives of Executive Orders in the codes and standards of the construction project agreement.

§ 137.299 Are Federal funds available to cover the cost of Self-Governance Tribes carrying out environmental responsibilities?

Yes, funds are available:

(a) for project-specific environmental costs through the construction project agreement; and

(b) for environmental review program costs through a funding agreement and/or a construction project agreement.

§ 137.300 Since Federal environmental responsibilities are new responsibilities, which may be assumed by Tribes under section 509 of the Act [25 U.S.C. 458aaa–8], are there additional funds available to Self-Governance Tribes to carry out these formerly inherently Federal responsibilities?

Yes, the Secretary must transfer not less than the amount of funds that the Secretary would have otherwise used to carry out the Federal environmental responsibilities assumed by the Self-Governance Tribe.

§ 137.301 How are project and program environmental review costs identified?

(a) The Self-Governance Tribe and the Secretary should work together during the initial stages of project development to identify program and project related costs associated with carrying out environmental responsibilities for proposed projects. The goal in this process is to identify the costs associated with all foreseeable environmental review activities.

(b) If unforeseen environmental review and compliance costs are identified during the performance of the construction project, the Self-Governance Tribe or, at the request of the Self-Governance Tribe, the Self-Governance Tribe and the Secretary (with or without amendment as required by § 137.363) may do one or more of the following:

(1) Mitigate adverse environmental effects;

(2) Alter the project scope of work; and/or

(3) Add additional program and/or project funding, including seeking supplemental appropriations.

§ 137.302 Are Federal funds available to cover start-up costs associated with initial Tribal assumption of environmental responsibilities?

(a) Yes, start-up costs are available as provided in section 508(c) of the Act [25 U.S.C. 458aaa–7(c)]. During the initial year that these responsibilities are assumed, the amount required to be paid under section 106(a)(2) of the Act [25 U.S.C. 450j–1(a)(2)] must include startup costs consisting of the reasonable costs that have been incurred or will be incurred on a one-time basis pursuant to the agreement necessary:

(1) To plan, prepare for, and assume operation of the environmental responsibilities; and

(2) To ensure compliance with the terms of the agreement and prudent management.

(b) Costs incurred before the initial year that the agreement is in effect may not be included in the amount required to be paid under section 106(a)(2) of the Act [25 U.S.C. 450j–1(a)(2)] if the Secretary does not receive a written notification of the nature and extent of the costs prior to the date on which such costs are incurred.

§ 137.303 Are Federal or other funds available for training associated with Tribal assumption of environmental responsibilities?

Yes, Self-Governance Tribes may use construction program and project funds for training and program development. Training and program development funds may also be available from other Federal agencies, such as the Environmental Protection Agency and the National Park Service, state and local governments, and private organizations.

§ 137.304 May Self-Governance Tribes buy back environmental services from the IHS?

Yes, Self-Governance Tribes may ''buy back'' project related services in their construction project agreement, including design and construction engineering, and environmental compliance services from the IHS in accordance with Section 508(f) of the Act [25 U.S.C. 458aaa–7(f)] and § 137.95, subject to the availability of the IHS's capacity to conduct the work.

§ 137.305 May Self-Governance Tribes act as lead, cooperating, or joint lead agencies for environmental review purposes?

Yes, Self-Governance Tribes assuming Federal environmental responsibilities for construction projects under section 509 of the Act [25 U.S.C. 458aaa–8] are entitled to receive equal consideration, on the same basis as any Federal agency, for lead, cooperating, and joint lead agency status. For informational purposes, the terms ''lead,'' ''cooperating,'' and ''joint lead agency'' are defined in the CEQ regulations at 40 CFR 1508.16, 1508.5, and 1501.5 respectively.

§ 137.306 How are Self-Governance Tribes recognized as having lead, cooperating, or joint lead agency status?

Self-Governance Tribes may be recognized as having lead, cooperating, or joint lead agency status through funding or other agreements with other agencies. To the extent that resources are available, the Secretary will encourage and facilitate Federal, state, and local agencies to enter into agreements designating Tribes as lead, cooperating, or joint lead agencies for environmental review purposes.

§ 137.307 What Federal environmental responsibilities remain with the Secretary when a Self-Governance Tribe assumes Federal environmental responsibilities for construction projects under section 509 of the Act [25 U.S.C. 458aaa–8]?

(a) All environmental responsibilities for Federal actions not directly related to construction projects assumed by Tribes under section 509 of the Act [25 U.S.C. 458aaa–8] remain with the Secretary. Federal agencies, including the IHS, retain responsibility for ensuring their environmental review procedures meet the requirements of NEPA, NHPA and related provisions of law, as called for in § 137.297.

(b) The Secretary will provide information updating and changing IHS agency environmental review policy and procedures to all Self-Governance

Tribes implementing a construction project agreement, and to other Indian Tribes upon request. If a Self-Governance Tribe participating under section 509 of the Act [25 U.S.C. 458aaa–8] does not wish to receive this information, it must notify the Secretary in writing. As resources permit, at the request of the Self-Governance Tribe, the Secretary will provide technical assistance to the Self-governance tribe to assist the Self-governance Tribe in carrying out Federal environmental responsibilities.

§ 137.308 Does the Secretary have any enforcement authority for Federal environmental responsibilities assumed by Tribes under section 509 of the Act [25 U.S.C. 458aaa–8]?

No, the Secretary does not have any enforcement authority for Federal environmental responsibilities assumed by Tribes under section 509 of the Act [25 U.S.C. 458aaa–8].

§ 137.309 How are NEPA and NHPA obligations typically enforced?

NEPA and NHPA obligations are typically enforced by interested parties who may file lawsuits against Federal agencies alleging that the agencies have not complied with their legal obligations under NEPA and NHPA. These lawsuits may only be filed in Federal court under the provisions of the APA, 5 U.S.C. 701–706. Under the APA, a Federal judge reviews the Federal agency's actions based upon an administrative record prepared by the Federal agency. The judge gives appropriate deference to the agency's decisions and does not substitute the court's views for those of the agency. Jury trials and civil discovery are not permitted in APA proceedings. If a Federal agency has failed to comply with NEPA or NHPA, the judge may grant declaratory or injunctive relief to the interested party. No money damages or fines are permitted in APA proceedings.

§ 137.310 Are Self-Governance Tribes required to grant a limited waiver of their sovereign immunity to assume Federal environmental responsibilities under section 509 of the Act [25 U.S.C. 458aaa–8]?

Yes, but only as provided in this section. Unless Self-Governance Tribes consent to the jurisdiction of a court, Self-Governance Tribes are immune from civil lawsuits. Self-Governance Tribes electing to assume Federal environmental responsibilities under section 509 of the Act [25 U.S.C. 458aaa–8] must provide a limited waiver of sovereign immunity solely for the purpose of enforcing a Tribal certifying officer's environmental responsibilities, as set forth in this subpart. Self-Governance Tribes are not required to waive any other immunity.

§ 137.311 Are Self-Governance Tribes entitled to determine the nature and scope of the limited immunity waiver required under section 509(a)(2) of the Act [25 U.S.C. 458aaa–8(a)(2)]?

(a) Yes, Section 509(a)(2) of the Act [25 U.S.C. 458aaa–8(a)(2)] only requires that the waiver permit a civil enforcement action to be brought against the Tribal certifying officer in his or her official capacity in Federal district court for declaratory and injunctive relief in a procedure that is substantially equivalent to an APA enforcement action against a Federal agency. Self-Governance Tribes are not required to subject themselves to suit in their own name, to submit to trial by jury or civil discovery, or to waive immunity for money damages, attorneys fees, or fines.

(b) Self-Governance Tribes may base the grant of a limited waiver under this subpart on the understanding that:

(1) Judicial review of the Tribal certifying official's actions are based upon the administrative record prepared by the Tribal official in the course of performing the Federal environmental responsibilities; and

(2) Actions and decisions of the Tribal certifying officer will be granted deference on a similar basis as Federal officials performing similar functions.

§ 137.312 Who is the proper defendant in a civil enforcement action under section 509(a)(2) of the Act [25 U.S.C. 458aaa–8(a)(2)]?

Only the designated Tribal certifying officer acting in his or her official capacity may be sued. Self-Governance Tribes and other Tribal officials are not proper defendants in lawsuits brought under section 509(a)(2) of the Act [25 U.S.C. 458aaa–8(a)(2)].

NOTIFICATION (PRIORITIZATION PROCESS, PLANNING, DEVELOPMENT AND CONSTRUCTION)

§ 137.320 Is the Secretary required to consult with affected Indian Tribes concerning construction projects and programs?

Yes, before developing a new project resource allocation methodology and application process the Secretary must consult with all Indian Tribes. In addition, before spending any funds for planning, design, construction, or renovation projects, whether subject to a competitive application and ranking process or not, the Secretary must consult with any Indian Tribe that would be significantly affected by the expenditure to determine and honor Tribal preferences whenever practicable concerning the size, location, type, and other characteristics of the project.

§ 137.321 How do Indian Tribes and the Secretary identify and request funds for needed construction projects?

In addition to the requirements contained in section 513 of the Act [25 U.S.C. 458aaa–12], Indian Tribes and the Secretary are encouraged to jointly identify health facility and sanitation needs at the earliest possible date for IHS budget formulation. In developing budget justifications for specific projects to be proposed to Congress, the Secretary shall follow the preferences of the affected Indian Tribe(s) to the greatest extent feasible concerning the size, location, type, and other characteristics of the project.

§ 137.322 Is the Secretary required to notify an Indian Tribe that funds are available for a construction project or a phase of a project?

(a) Yes, within 30 days after the Secretary's allocation of funds for planning phase, design phase, or construction phase activities for a specific project, the Secretary shall notify, by registered mail with return receipt in order to document mailing, the Indian Tribe(s) to be benefitted by the availability of the funds for each phase of a project. The Secretarial notice of fund allocation shall offer technical assistance in the preparation of a construction project proposal.

(b) The Secretary shall, within 30 days after receiving a request from an Indian Tribe, furnish the Indian Tribe with all information available to the Secretary about the project including, but not limited to: construction drawings, maps, engineering reports, design reports, plans of requirements, cost estimates, environmental assessments, or environmental impact reports and archeological reports.

(c) An Indian Tribe is not required to request this information prior to either submitting a notification of intent or a construction project proposal.

(d) The Secretary shall have a continuing responsibility to furnish information to the Indian Tribes.

PROJECT ASSUMPTION PROCESS

§ 137.325 What does a Self-Governance Tribe do if it wants to perform a construction project under section 509 of the Act [25 U.S.C. 458aaa–8]?

(a) A Self-Governance Tribe may start the process of developing a construction project agreement by:

(1) Notifying the Secretary in writing that the Self-Governance Tribe wishes to enter into a pre-agreement negotiation phase as set forth in section 105(m)(3) of the Act [25 U.S.C. 450j(m)(3)]; or

(2) Submitting a proposed construction project agreement. This proposed agreement may be the final proposal, or it may be a draft for consideration and negotiation, or

(3) A combination of the actions described in paragraphs (a)(1) and (2) of this section.

(b) Upon receiving a Self-Governance Tribe's request to enter into a pre-negotiation phase the Secretary shall take the steps outlined in section 105(m)(3) of the Act [25 U.S.C. 450j(m)(3)].

§ 137.326 What must a Tribal proposal for a construction project agreement contain?

A construction project proposal must contain all of the required elements of a construction project agreement as defined in § 137.280. In addition to these minimum requirements, Self-Governance Tribes may propose additional items.

§ 137.327 May multiple projects be included in a single construction project agreement?

Yes, a Self-Governance Tribe may include multiple projects in a single construction project agreement proposal or may add additional approved projects by amendment(s) to an existing construction project agreement.

§ 137.328 Must a construction project proposal incorporate provisions of Federal construction guidelines and manuals?

(a) No, the Self-Governance Tribe and the Secretary must agree upon and specify appropriate building codes and architectural and engineering standards (including health and safety) which must be in conformity with nationally recognized standards for comparable projects.

(b) The Secretary may provide, or the Self-Governance Tribe may request, Federal construction guidelines and manuals for consideration by the Self-Governance Tribe in the preparation of its construction project proposal. If Tribal construction codes and standards (including national, regional, State, or Tribal building codes or construction industry standards) are consistent with or exceed otherwise applicable nationally recognized standards, the Secretary must accept the Tribally proposed standards.

§ 137.329 What environmental considerations must be included in the construction project agreement?

The construction project agreement must include:

(a) Identification of the Tribal certifying officer for environmental review purposes,

(b) Reference to the Tribal resolution or equivalent Tribal action appointing the Tribal certifying officer and accepting the jurisdiction of the Federal court for enforcement purposes as provided in §§ 137.310 and 137.311.

(c) Identification of the environmental review procedures adopted by the Self-Governance Tribe, and

(d) An assurance that no action will be taken on the construction phase of the project that would have an adverse environmental impact or limit the choice of reasonable alternatives prior to making an environmental determination in accordance with the Self-Governance Tribe's adopted procedures.

§ 137.330 What happens if the Self-Governance Tribe and the Secretary cannot develop a mutually agreeable construction project agreement?

The Self-Governance Tribe may submit a final construction project proposal to the Secretary. No later than 30 days after the Secretary receives the final construction project proposal, or within a longer time agreed to by the Self-Governance Tribe in writing, the Secretary shall review and make a determination to approve or reject the construction project proposal in whole or in part.

§ 137.331 May the Secretary reject a final construction project proposal based on a determination of Tribal capacity or capability?

No, the Secretary may not reject a final construction project proposal based on a determination of Tribal capacity or capability.

§ 137.332 On what basis may the Secretary reject a final construction project proposal?

(a) The only basis for rejection of project activities in a final construction project proposal are:

(1) The amount of funds proposed in the final construction project proposal exceeds the applicable funding level for the construction project as determined under sections 508(c) [25 U.S.C. 458aaa–

7(c)] and 106 of the Act [25 U.S.C. 450j–1].

(2) The final construction project proposal does not meet the minimum content requirements for construction project agreements set forth in section 501(a)(2) of the Act [25 U.S.C. 458aaa(a)(2)]; and

(3) The final construction project proposal on its face clearly demonstrates that the construction project cannot be completed as proposed.

(b) For construction programs proposed to be included in a construction project agreement, the Secretary may also reject that portion of the proposal that proposes to assume an inherently Federal function that cannot legally be delegated to the Self-Governance Tribe.

§ 137.333 What procedures must the Secretary follow if the Secretary rejects a final construction project proposal, in whole or in part?

Whenever the Secretary rejects a final construction project proposal in whole or in part, the Secretary must:

(a) Send the Self-Governance Tribe a timely written notice of rejection that shall set forth specific finding(s) that clearly demonstrates, or that is supported by controlling legal authority supporting the rejection;

(b) Within 20 days, provide all documents relied on in making the rejection decision to the Self-Governance Tribe;

(c) Provide assistance to the Self-Governance Tribe to overcome any objections stated in the written notice of rejection;

(d) Provide the Self-Governance Tribe with a hearing on the record with the right to engage in full discovery relevant to any issue raised in the matter and the opportunity for appeal of the decision to reject the final construction contract proposal, under the regulations set forth in subpart P of this part, except that the Self-Governance Tribe may, in lieu of filing an appeal, initiate an action in Federal district court and proceed directly under sections 511 [25 U.S.C. 458aaa–10] and 110(a) of the Act [25 U.S.C. 450m–1(a)]. With respect to any hearing or appeal or civil action conducted pursuant to this section, the Secretary shall have the burden of demonstrating by clear and convincing evidence the validity of the grounds for rejecting the final construction project proposal (or portion thereof); and

(e) Provide the Self-Governance Tribe with the option of entering into the severable portions of a final proposed construction project agreement (including a lesser funding amount) that the Secretary did not reject, subject to any additional alterations necessary to conform the construction project agreement to the severed provisions. Exercising this option does not affect the Self-Governance Tribe's right to appeal the portion of the final construction project proposal that was rejected by the Secretary.

§ 137.334 What happens if the Secretary fails to notify the Self-Governance Tribe of a decision to approve or reject a final construction project proposal within the time period allowed?

If the Secretary fails to notify the Self-Governance Tribe of the decision to approve or reject within 30 days (or a longer period if agreed to by the Self-Governance Tribe in writing), then the proposal will be deemed approved by the Secretary.

§ 137.335 What costs may be included in the budget for a construction agreement?

(a) A Self-Governance Tribe may include costs allowed by applicable OMB Circulars, and costs allowed under sections 508(c) [25 U.S.C. 458aaa–7(c)], 106 [25 U.S.C. 450j–1] and 105 (m) of the Act [25 U.S.C. 450j(m)]. The costs incurred will vary depending on which phase of the construction process the Self-Governance Tribe is conducting and type of construction project agreement that will be used.

(b) Regardless of whether a construction project agreement is fixed price or cost-reimbursement, budgets may include costs or fees associated with the following:

(1) Construction project proposal preparation;

(2) Conducting community meetings to develop project documents;

(3) Architects, engineers, and other consultants to prepare project planning documents, to develop project plans

and specifications, and to assist in oversight of the design during construction;

(4) Real property lease or acquisition;

(5) Development of project surveys including topographical surveys, site boundary descriptions, geotechnical surveys, archeological surveys, and NEPA compliance;

(6) Project management, superintendence, safety and inspection;

(7) Travel, including local travel incurred as a direct result of conducting the construction project agreement and remote travel in conjunction with the project;

(8) Consultants, such as demographic consultants, planning consultants, attorneys, accountants, and personnel who provide services, to include construction management services;

(9) Project site development;

(10) Project construction cost;

(11) General, administrative overhead, and indirect costs;

(12) Securing and installing moveable equipment, telecommunications and data processing equipment, furnishings, including works of art, and special purpose equipment when part of a construction contract;

(13) Other costs directly related to performing the construction project agreement;

(14) Project Contingency:

(i) A cost-reimbursement project agreement budgets contingency as a broad category. Project contingency remaining at the end of the project is considered savings.

(ii) Fixed-price agreements budget project contingency in the lump sum price or unit price.

(c) In the case of a fixed-price project agreement, a reasonable profit determined by taking into consideration the relevant risks and local market conditions.

§ 137.336 What is the difference between fixed-price and cost-reimbursement agreements?

(a) Cost-reimbursement agreements generally have one or more of the following characteristics:

(1) Risk is shared between IHS and the Self-Governance Tribe;

(2) Self-Governance Tribes are not required to perform beyond the amount of funds provided under the agreement;

(3) Self-Governance Tribes establish budgets based upon the actual costs of the project and are not allowed to include profit;

(4) Budgets are stated using broad categories, such as planning, design, construction project administration, and contingency;

(5) The agreement funding amount is stated as a ''not to exceed'' amount;

(6) Self-Governance Tribes provide notice to the IHS if they expect to exceed the amount of the agreement and require more funds;

(7) Excess funds remaining at the end of the project are considered savings; and

(8) Actual costs are subject to applicable OMB circulars and cost principles.

(b) Fixed Price agreements generally have one or more of the following characteristics:

(1) Self-Governance Tribes assume the risk for performance;

(2) Self-Governance Tribes are entitled to make a reasonable profit;

(3) Budgets may be stated as lump sums, unit cost pricing, or a combination thereof;

(4) For unit cost pricing, savings may occur if actual quantity is less than estimated; and,

(5) Excess funds remaining at the end of a lump sum fixed price project are considered profit, unless, at the option of the Self-Governance Tribe, such amounts are reclassified in whole or in part as savings.

§ 137.337 What funding must the Secretary provide in a construction project agreement?

The Secretary must provide funding for a construction project agreement in accordance with sections 106 [25 U.S.C. 450j–1] and 508(c) of the Act [25 U.S.C. 458aaa–7(c)].

§ 137.338 Must funds from other sources be incorporated into a construction project agreement?

Yes, at the request of the Self-Governance Tribe, the Secretary must include funds from other agencies as permitted by law, whether on an ongoing or a one-time basis.

§ 137.339 May a Self-Governance Tribe use project funds for matching or cost participation requirements under other Federal and non-Federal programs?

Yes, notwithstanding any other provision of law, all funds provided under a construction project agreement may be treated as non-Federal funds for purposes of meeting matching or cost participation requirements under any other Federal or non-Federal program.

§ 137.340 May a Self-Governance Tribe contribute funding to a project?

Yes, the Self-Governance Tribe and the Secretary may jointly fund projects. The construction project agreement should identify the Secretarial amount and any Tribal contribution amount that is being incorporated into the construction project agreement. The Self-Governance Tribe does not have to deposit its contribution with the Secretary.

§ 137.341 How will a Self-Governance Tribe receive payment under a construction project agreement?

(a) For all construction project agreements, advance payments shall be made annually or semiannually, at the Self-Governance Tribe's option. The initial payment shall include all contingency funding for the project or phase of the project to the extent that there are funds appropriated for that purpose.

(b) The amount of subsequent payments is based on the mutually agreeable project schedule reflecting:

(1) Work to be accomplished within the advance payment period,

(2) Work already accomplished, and

(3) Total prior payments for each annual or semiannual advance payment period.

(c) For lump sum, fixed price agreements, at the request of the Self-Governance Tribe, payments shall be based on an advance payment period measured as follows:

(1) One year; or

(2) Project Phase(e.g., planning, , design, construction.) If project phase is chosen as the payment period, the full amount of funds necessary to perform the work for that phase of the construction project agreement is payable in the initial advance payment. For multi-phase projects, the planning and design phases must be completed prior to the transfer of funds for the associated construction phase. The completion of the planning and design phases will include at least one opportunity for Secretarial approval in accordance with § 137.360.

(d) For the purposes of payment, Sanitation Facilities Construction Projects authorized pursuant to Pub. L. 86–121, are considered to be a single construction phase and are payable in a single lump sum advance payment in accordance with paragraph (c)(2) of this section.

(e) For all other construction project agreements, the amount of advance payments shall include the funds necessary to perform the work identified in the advance payment period of one year.

(f) Any agreement to advance funds under paragraphs (b), (c) or (d) of this section is subject to the availability of appropriations.

(g) (1) Initial advance payments are due within 10 days of the effective date of the construction project agreement; and

(2) subsequent payments are due:

(i) Within 10 days of apportionment for annual payments or

(ii) Within 10 days of the start date of the project phase for phase payments.

§ 137.342 What happens to funds remaining at the conclusion of a cost reimbursement construction project?

All funds, including contingency funds, remaining at the conclusion of the project are considered savings and may be used by the Self-Governance Tribe to provide additional services for the purpose for which the funds were originally appropriated. No further approval or justifying documentation is required before the expenditure of the remaining funds.

§ 137.343 What happens to funds remaining at the conclusion of a fixed price construction project?

(a) For lump sum fixed price construction project agreements, all funds remaining at the conclusion of the project are considered profits and belong to the Self-Governance Tribe.

(b) For fixed price construction project agreements with unit price components, all funds remaining that are associated with overestimated unit price quantities are savings and may be used by the Self-Governance Tribe in accordance with section 137.342. All other funds remaining at the conclusion of the project are considered profit and belong to the Self-Governance Tribe.

(c) At the option of the Self-Governance Tribe, funds otherwise identified in paragraphs (a) and (b) as ''profit'' may be reclassified, in whole or in part, as savings and to that extent may be used by the Self-Governance Tribe in accordance with section 137.142.

§ 137.344 May a Self-Governance Tribe reallocate funds among construction project agreements?

Yes, a Self-Governance Tribe may reallocate funds among construction project agreements to the extent not prohibited by applicable appropriation law(s).

ROLES OF SELF-GOVERNANCE TRIBE IN ESTABLISHING AND IMPLEMENTING CONSTRUCTION PROJECT AGREEMENTS

§ 137.350 Is a Self-Governance Tribe responsible for completing a construction project in accordance with the negotiated construction project agreement?

Yes, a Self-Governance Tribe assumes responsibility for completing a construction project, including day-to-day on-site management and administration of the project, in accordance with the negotiated construction project agreement. However, Self-Governance Tribes are not required to perform beyond the amount of funds provided. For example, a Self-Governance Tribe may encounter unforeseen circumstances during the term of a construction project agreement. If this occurs, options available to the Self-Governance Tribe include, but are not limited to:

(a) Reallocating existing funding;

(b) Reducing/revising the scope of work that does not require an amendment because it does not result in a significant change;

(c) Utilizing savings from other projects;

(d) Requesting additional funds or appropriations;

(e) Utilizing interest earnings;

(f) Seeking funds from other sources; and/or

(g) Redesigning or re-scoping that does result in a significant change by amendment as provided in §§ 137.363 and 137.364.

§ 137.351 Is a Self-Governance Tribe required to submit construction project progress and financial reports for construction project agreements?

Yes, a Self-Governance Tribe must provide the Secretary with construction project progress and financial reports semiannually or, at the option of the Self-Governance Tribe, on a more frequent basis. Self-Governance Tribes are only required to submit the reports, as negotiated in the Construction Project Agreement, after funds have been transferred to the Self-Governance Tribe for a construction project. Construction project progress reports and financial reports are only required for active construction projects.

§ 137.352 What is contained in a construction project progress report?

Construction project progress reports contain information about accomplishments during the reporting period and issues and concerns of the Self-Governance Tribe, if any.

§ 137.353 What is contained in a construction project financial report?

Construction project financial reports contain information regarding the amount of funds expended during the reporting period, and financial concerns of the Self-Governance Tribe, if any.

ROLES OF THE SECRETARY IN ESTABLISHING AND IMPLEMENTING CONSTRUCTION PROJECT AGREEMENTS

§ 137.360 Does the Secretary approve project planning and design documents prepared by the Self-Governance Tribe?

The Secretary shall have at least one opportunity to approve project planning and design documents prepared by the Self-Governance Tribe in advance

of construction if the Self-Governance Tribe is required to submit planning or design documents as a part of the scope of work under a construction project agreement.

§ 137.361 Does the Secretary have any other opportunities to approve planning or design documents prepared by the Self-Governance Tribe?

Yes, but only if there is an amendment to the construction project agreement that results in a significant change in the original scope of work.

§ 137.362 May construction project agreements be amended?

Yes, the Self-Governance Tribe, at its discretion, may request the Secretary to amend a construction project agreement to include additional projects. In addition, amendments are required if there is a significant change from the original scope of work or if funds are added by the Secretary. The Self-Governance Tribe may make immaterial changes to the performance period and make budget adjustments within available funding without an amendment to the construction project agreement.

§ 137.363 What is the procedure for the Secretary's review and approval of amendments?

(a) The Secretary shall promptly notify the Self-Governance Tribe in writing of any concerns or issues that may lead to disapproval. The Secretary shall share relevant information and documents, and make a good faith effort to resolve all issues and concerns of the Self-Governance Tribe. If, after consultation with the Self-Governance Tribe, the Secretary intends to disapprove the proposed amendment, then the Secretary shall follow the procedures set forth in § 137.330 through 137.334.

(b) The time allowed for Secretarial review, comment, and approval of amendments is 30 days, or within a longer time if agreed to by the Self-Governance Tribe in writing. Absence of a written response by the Secretary within 30 days shall be deemed approved.

(c) The timeframe set forth in paragraph (b) of this section is intended to be the maximum time and may be reduced based on urgency and need, by agreement of the parties. If the Self-Governance Tribe requests reduced timeframes for action due to unusual or special conditions (such as limited construction periods), the Secretary shall make a good faith effort to accommodate the requested timeframes.

§ 137.364 What constitutes a significant change in the original scope of work?

A significant change in the original scope of work is:

(a) A change that would result in a cost that exceeds the total of the project funds available and the Self-Governance Tribe's contingency funds; or

(b) A material departure from the original scope of work, including substantial departure from timelines negotiated in the construction project agreement.

§ 137.365 What is the procedure for the Secretary's review and approval of project planning and design documents submitted by the Self-Governance Tribe?

(a) The Secretary shall review and approve planning documents to ensure compliance with planning standards identified in the construction project agreement. The Secretary shall review and approve design documents for general compliance with requirements of the construction project agreement.

(b) The Secretary shall promptly notify the Self-Governance Tribe in writing of any concerns or issues that may lead to disapproval. The Secretary shall share relevant information and documents, and make a good faith effort to resolve all issues and concerns of the Self-Governance Tribe. If, after consultation with the Self-Governance Tribe, the Secretary intends to disapprove the documents, then the Secretary shall follow the procedures set forth in § 137.333.

(c) The time allowed for Secretarial review, comment, and approval of planning and design documents is 21 days, unless otherwise agreed to by the Self-Governance Tribe in writing. Absence of a written response by the Secretary within 21 days shall be deemed approved.

§ 137.366 May the Secretary conduct onsite project oversight visits?

Yes, the Secretary may conduct onsite project oversight visits semiannually or on an alternate schedule negotiated in the construction project agreement. The Secretary must provide the Self-Governance Tribe with reasonable advance written notice to assist the Self-Governance Tribe in coordinating the visit. The purpose of the visit is review the progress under the construction project agreement. At the request of the Self-Governance Tribe, the Secretary must provide the Self-Governance Tribe a written site visit report.

§ 137.367 May the Secretary issue a stop work order under a construction project agreement?

No, the Secretary has no role in the day-to-day management of a construction project.

§ 137.368 Is the Secretary responsible for oversight and compliance of health and safety codes during construction projects being performed by a Self-Governance Tribe under section 509 of the Act [25 U.S.C. 488aaa–8]?

No, the Secretary is not responsible for oversight and compliance of health and safety codes during construction projects being performed by a Self-Governance Tribe under section 509 of the Act [25 U.S.C. 488aaa–8].

OTHER

§ 137.370 Do all provisions of this part apply to construction project agreements under this subpart?

Yes, to the extent the provisions are not inconsistent with the provisions in this subpart. Provisions that do not apply include: programmatic reports and data requirements; reassumption; compact and funding agreement review, approval, and final offer process; and compact and funding agreement contents.

§ 137.371 Who takes title to real property purchased with funds provided under a construction project agreement?

The Self-Governance Tribe takes title to the real property unless the Self-Governance Tribe requests that the Secretary take title to the property.

§ 137.372 Does the Secretary have a role in the fee-to-trust process when real property is purchased with construction project agreement funds?

No, the Secretary does not have a role in the fee-to-trust process except to provide technical assistance if requested by the Self-Governance Tribe.

§ 137.373 Do Federal real property laws, regulations and procedures that apply to the Secretary also apply to Self-Governance Tribes that purchase real property with funds provided under a construction project agreement?

No, unless the Self-Governance Tribe has requested the Secretary to take fee title to the property.

§ 137.374 Does the Secretary have a role in reviewing or monitoring a Self-Governance Tribe's actions in acquiring or leasing real property with funds provided under a construction project agreement?

No, unless the Self-Governance Tribe has requested the Secretary take fee title to the property. The Self-Governance Tribe is responsible for acquiring all real property needed to perform a construction project under a construction project agreement, not the Secretary. The Secretary shall not withhold funds or refuse to enter into a construction project agreement because of a disagreement between the Self-Governance Tribe and the Secretary over the Self-Governance Tribe's decisions to purchase or lease real property.

§ 137.375 Are Tribally-owned facilities constructed under section 509 of the Act [25 U.S.C. 458aaa–8] eligible for replacement, maintenance, and improvement funds on the same basis as if title to such property were vested in the United States?

Yes, Tribally-owned facilities constructed under section 509 of the Act [25 U.S.C. 458aaa–8] are eligible for replacement, maintenance, and improvement funds on the same basis as if title to such property were vested in the United States.

§ 137.376 Are design and construction projects performed by Self-Governance Tribes under section 509 of the Act [25 U.S.C. 458aaa–8] subject to Federal metric requirements?

No, however, the Self-Governance Tribe and the Secretary may negotiate the use of Federal metric requirements in the construction project agreement when the Self-Governance Tribe will design and/or construct an IHS facility that the Secretary will own and operate.

§ 137.377 Do Federal procurement laws and regulations apply to construction project agreements performed under section 509 of the Act [25 U.S.C. 458aaa–8]?

No, unless otherwise agreed to by the Tribe, no provision of the Office of Federal Procurement Policy Act, the Federal Acquisition Regulations issued pursuant thereto, or any other law or regulation pertaining to Federal procurement (including Executive Orders) shall apply to any construction project conducted under section 509 of the Act [25 U.S.C. 458aaa–8]. The Secretary and the Self-Governance Tribe may negotiate to apply specific provisions of the Office of Federal Procurement and Policy Act and Federal Acquisition Regulations to a construction project agreement or funding agreement. Absent a negotiated agreement, such provisions and regulatory requirements do not apply.

§ 137.378 Do the Federal Davis-Bacon Act and wage rates apply to construction projects performed by Self-Governance Tribes using their own funds or other non-Federal funds?

No, the Federal Davis-Bacon Act and wage rates do not apply to construction projects performed by Self-Governance Tribes using their own funds or other non-Federal funds.

§ 137.379 Do Davis-Bacon wage rates apply to construction projects performed by Self-Governance Tribes using Federal funds?

Davis-Bacon Act wage rates only apply to laborers and mechanics employed by the contractors and subcontractors (excluding Indian Tribes, inter-Tribal consortia, and Tribal organizations) retained by Self-Governance Tribes to perform construction. The Davis-Bacon Act and wage rates do not apply when Self-Governance Tribes perform work with their own employees.

Subpart O—Secretarial Responsibilities

BUDGET REQUEST

§ 137.401 What role does Tribal consultation play in the IHS annual budget request process?

The IHS will consult with Tribes on budget issues consistent with Administration policy on Tribal consultation.

REPORTS

§ 137.405 Is the Secretary required to report to Congress on administration of Title V and the funding requirements presently funded or unfunded?

Yes, no later than January 1 of each year after the date of enactment of the Tribal Self-Governance Amendments of 2000, the Secretary shall submit to the Committee on Indian Affairs of the Senate and the Committee on Resources of the House of Representatives a written report regarding the administration of Title V. The report shall include a detailed analysis of the funding requirements presently funded or unfunded for each Indian Tribe or Tribal organization, either directly by the Secretary, under self-determination contracts under Title I, or under compacts and funding agreements authorized under Title V.

§ 137.406 In compiling reports pursuant to this section, may the Secretary impose any reporting requirements on Self-Governance Tribes, not otherwise provided in Title V?

No, in compiling reports pursuant to this section, the Secretary may not impose any reporting requirements on Self-Governance Tribes, not otherwise provided in Title V.

§ 137.407 What guidelines will be used by the Secretary to compile information required for the report?

The report shall be compiled from information contained in funding agreements, annual audit reports, and data of the Secretary regarding the disposition of Federal funds. The report must identify:

(a) The relative costs and benefits of self-governance, including savings;

(b) With particularity, all funds that are specifically or functionally related to the provision by the Secretary of services and benefits to Self-Governance Tribes and their members;

(c) The funds transferred to each Self-Governance Tribe and the corresponding reduction in the Federal bureaucracy;

(d) The funding formula for individual Tribal shares of all headquarters' funds, together with the comments of affected Self-Governance Tribes, developed under § 137.405 of this subpart; and

(e) Amounts expended in the preceding fiscal year to carry out inherent Federal functions, including an identification of those functions by type and location.

Subpart P—Appeals

§ 137.410 For the purposes of section 110 of the Act [25 U.S.C. 450m–1] does the term contract include compacts, funding agreements, and construction project agreements entered into under Title V?

Yes, for the purposes of section 110 of the Act [25 U.S.C. 450m–1] the term ''contract'' includes compacts, funding agreements, and construction project agreements entered into under Title V.

POST-AWARD DISPUTES

§ 137.412 Do the regulations at 25 CFR Part 900, Subpart N apply to compacts, funding agreements, and construction project agreements entered into under Title V?

Yes, the regulations at 25 CFR Part 900, Subpart N apply to compacts, funding agreements, and construction project agreements entered into under Title V.

PRE-AWARD DISPUTES

§ 137.415 What decisions may an Indian Tribe appeal under § 137.415 through 137.436?

An Indian Tribe may appeal:

(a) A decision to reject a final offer, or a portion thereof, under section 507(b) of the Act [25 U.S.C. 458aaa–6(b)];

(b) A decision to reject a proposed amendment to a compact or funding agreement, or a portion thereof, under section 507(b) of the Act [25 U.S.C. 458aaa–6(b)];

(c) A decision to rescind and reassume a compact or funding agreement, in whole or in part, under section 507(a)(2) of the Act [25 U.S.C. 458aaa–6(a)(2)], except for immediate reassumptions under section 507(a)(2)(C) of the Act [25 U.S.C. 458aaa–6(a)(2)(C)];

(d) A decision to reject a final construction project proposal, or a portion thereof, under section 509(b) of the Act [25 U.S.C. 458aaa–8(b)] and subpart N of this part; and

(e) For construction project agreements carried out under section 509 of the Act [25 U.S.C. 458aaa–8], a decision to reject project planning documents, design documents, or proposed amendments submitted by a Self-Governance Tribe under section 509(f) of the Act [25 U.S.C. 458aaa–8(f)] and subpart N of this part.

§ 137.416 Do §§ 137.415 through 137.436 apply to any other disputes?

No, §§ 137.415 through 137.436 only apply to decisions listed in § 137.415. Specifically, §§ 137.415 through 137.436 do not apply to any other dispute, including, but not limited to:

(a) Disputes arising under the terms of a compact, funding agreement, or construction project agreement that has been awarded;

(b) Disputes arising from immediate reassumptions under section 507(a)(2)(C) of the Act [25 U.S.C. 458aaa–6(a)(2)(C)] and § 137.261 and 137.262, which are covered under § 137.440 through 137.445.

(c) Other post-award contract disputes, which are covered under § 137.412.

(d) Denials under the Freedom of Information Act, 5 U.S.C. 552, which may be appealed under 45 CFR part 5.

(e) Decisions relating to the award of grants under section 503(e) of the Act [25 U.S.C. 458aaa–2(e)], which may be appealed under 45 CFR part 5.

§ 137.417 What procedures apply to Interior Board of Indian Appeals (IBIA) proceedings?

The IBIA may use the procedures set forth in 43 CFR 4.22–4.27 as a guide.

§ 137.418 How does an Indian Tribe know where and when to file its appeal from decisions made by IHS?

Every decision in any of the areas listed in § 137.415 must contain information which shall tell the Indian Tribe where and when to file the Indian Tribe's appeal. Each decision shall include the following statement:

Within 30 days of the receipt of this decision, you may request an informal conference under 42 CFR 137.421, or appeal this decision under 42 CFR 137.425 to the Interior Board of Indian Appeals (IBIA). Should you decide to appeal this decision, you may request a hearing on the record. An appeal to the IBIA under 42 CFR 137.425 shall be filed with the IBIA by certified mail or by hand delivery at the following address: Board of Indian Appeals, U.S. Department of the Interior, 4015 Wilson Boulevard, Arlington, VA 22203. You shall serve copies of your Notice of Appeal on the Secretary and on the official whose decision is being appealed. You shall certify to the IBIA that you have served these copies.

§ 137.419 What authority does the IBIA have under §§ 137.415 through 137.436?

The IBIA has the authority:

(a) to conduct a hearing on the record;

(b) to permit the parties to engage in full discovery relevant to any issue raised in the matter;

(c) to issue a recommended decision; *and*

(d) to take such action as necessary to insure rights specified in § 137.430.

§ 137.420 Does an Indian Tribe have any options besides an appeal?

Yes, the Indian Tribe may request an informal conference. An informal conference is a way to resolve issues as quickly as possible, without the need for a formal hearing. Or, the Indian Tribe may, in lieu of filing an administrative appeal under this subpart or upon completion of an informal conference, file an action in Federal court pursuant to section 110 of the Act [25 U.S.C. 450m–1].

§ 137.421 How does an Indian Tribe request an informal conference?

The Indian Tribe must file its request for an informal conference with the office of the person whose decision it is appealing, within 30 days of the day it receives the decision. The Indian Tribe may either hand-deliver the request for an informal conference to that person's office, or mail it by certified mail, return receipt requested. If the Indian Tribe mails the request, it will be considered filed on the date the Indian Tribe mailed it by certified mail.

§ 137.422 How is an informal conference held?

(a) The informal conference must be held within 30 days of the date the request was received, unless the Indian Tribe and the authorized representative of the Secretary agree on another date.

(b) If possible, the informal conference will be held at the Indian Tribe's office. If the meeting cannot be held at the Indian Tribe's office and is held more than fifty miles from its office, the Secretary must arrange to pay transportation costs and per diem for incidental expenses to allow for adequate representation of the Indian Tribe.

(c) The informal conference must be conducted by a designated representative of the Secretary.

(d) Only people who are the designated representatives of the Indian Tribe, or authorized by the Secretary are allowed to make presentations at the informal conference. Such designated representatives may include Office of Tribal Self-Governance.

§ 137.423 What happens after the informal conference?

(a) Within 10 days of the informal conference, the person who conducted the informal conference must prepare and mail to the Indian Tribe a written report which summarizes what happened at the informal conference and a recommended decision.

(b) Every report of an informal conference must contain the following language:

Within 30 days of the receipt of the recommended decision from the informal conference, you may file an appeal of the initial decision of the DHHS agency with the Interior Board of Indian Appeals (IBIA) under 42 CFR 137.425. You may request a hearing on the record. An appeal to the IBIA under 42 CFR 137.425 shall be filed with the IBIA by certified mail or hand delivery at the following address: Board of Indian Appeals, U.S. Department of the Interior, 4015 Wilson Boulevard, Arlington, VA 22203. You shall serve copies of your Notice of Appeal on the Secretary and on the official whose decision is being appealed. You shall certify to the IBIA that you have served these copies. Alternatively you may file an action in Federal court pursuant to section 110 of the Act. [25 U.S.C. 450m–1].

§ 137.424 Is the recommended decision from the informal conference final for the Secretary?

No. If the Indian Tribe is dissatisfied with the recommended decision from the informal conference, it may still appeal the initial decision within 30 days of receiving the recommended decision and the report of the informal conference. If the Indian Tribe does not file a notice of appeal within 30 days, or before the expiration of the extension it has received under § 137.426 , the recommended decision of the informal conference becomes final for the Secretary and may be appealed to Federal court pursuant to section 110 of the Act [25 U.S.C. 450m–1].

§ 137.425 How does an Indian Tribe appeal the initial decision if it does not request an informal conference or if it does not agree with the recommended decision resulting from the informal conference?

(a) If the Indian Tribe decides to appeal, it must file a notice of appeal with the IBIA within 30 days of receiving either the initial decision or the recommended decision from the informal conference.

(b) The Indian Tribe may either hand-deliver the notice of appeal to the IBIA, or mail it by certified mail, return receipt requested. If the Indian Tribe mails the Notice of Appeal, it will be considered filed on the date the Indian Tribe mailed it by certified mail. The Indian Tribe should mail the notice of appeal to: Board of Indian Appeals, U.S. Department of the Interior, 4015 Wilson Boulevard, Arlington, VA 22203.

(c) The Notice of Appeal must:

(1) Briefly state why the Indian Tribe thinks the initial decision is wrong;

(2) Briefly identify the issues involved in the appeal; and

(3) State whether the Indian Tribe wants a hearing on the record, or whether the Indian Tribe wants to waive its right to a hearing.

(d) The Indian Tribe must serve a copy of the notice of appeal upon the official whose decision it is appealing. The Indian Tribe must certify to the IBIA that it has done so.

(e) The authorized representative of the Secretary will be considered a party to all appeals filed with the IBIA under the Act.

(f) In lieu of filing an administrative appeal an Indian Tribe may proceed directly to Federal court pursuant to section 110 of the Act [25 U.S.C. 450m–1].

§ 137.426 May an Indian Tribe get an extension of time to file a notice of appeal?

Yes, if the Indian Tribe needs additional time, the Indian Tribe may request an extension of time to file its Notice of Appeal with the IBIA within 60 days of receiving either the initial decision or the recommended decision resulting from the informal conference. The request of the Indian Tribe must be in writing, and must give a reason for not filing its notice of appeal within the 30-day time period. If the Indian Tribe has a valid reason for not filing its notice of appeal on time, it may receive an extension.

§ 137.427 What happens after an Indian Tribe files an appeal?

(a) Within 5 days of receiving the Indian Tribe's notice of appeal, the IBIA will decide whether the appeal falls under § 137.415. If so, the Indian Tribe is entitled to a hearing.

(b) If the IBIA cannot make that decision based on the information included in the notice of appeal, the IBIA may ask for additional statements

from the Indian Tribe, or from the appropriate Federal agency. If the IBIA asks for more statements, it will make its decision within 5 days of receiving those statements.

(c) If the IBIA decides that the Indian Tribe is not entitled to a hearing or if the Indian Tribe has waived its right to a hearing on the record, the IBIA will dismiss the appeal and inform the Indian Tribe that it is not entitled to a hearing or has waived its right to a hearing.

§ 137.428 How is a hearing arranged?

(a) If a hearing is to be held, the IBIA will refer the Indian Tribe's case to the Hearings Division of the Office of Hearings and Appeals of the U.S. Department of the Interior. The case will then be assigned to an Administrative Law Judge (ALJ), appointed under 5 U.S.C. 3105.

(b) Within 15 days of the date of the referral, the ALJ will hold a pre-hearing conference, by telephone or in person, to decide whether an evidentiary hearing is necessary, or whether it is possible to decide the appeal based on the written record. At the pre-hearing conference the ALJ will provide for:

(1) A briefing and discovery schedule;

(2) A schedule for the exchange of information, including, but not limited to witness and exhibit lists, if an evidentiary hearing is to be held;

(3) The simplification or clarification of issues;

(4) The limitation of the number of expert witnesses, or avoidance of similar cumulative evidence, if an evidentiary hearing is to be held;

(5) The possibility of agreement disposing of all or any of the issues in dispute; and

(6) Such other matters as may aid in the disposition of the appeal.

(c) The ALJ shall order a written record to be made of any conference results that are not reflected in a transcript.

§ 137.429 What happens when a hearing is necessary?

(a) The ALJ must hold a hearing within 90 days of the date of the order referring the appeal to the ALJ, unless the parties agree to have the hearing on a later date.

(b) At least 30 days before the hearing, the Secretary must file and serve the Indian Tribe with a response to the notice of appeal.

(c) If the hearing is held more than 50 miles from the Indian Tribe's office, the Secretary must arrange to pay transportation costs and per diem for incidental expenses to allow for adequate representation of the Indian Tribe.

(d) The hearing shall be conducted in accordance with the Administrative Procedure Act, 5 U.S.C. 556.

§ 137.430 What is the Secretary's burden of proof for appeals covered by § 137.415?

As required by section 518 of the Act [25 U.S.C. 458aaa–17], the Secretary must demonstrate by clear and convincing evidence the validity of the grounds for the decision made and that the decision is fully consistent with provisions and policies of the Act.

§ 137.431 What rights do Indian Tribes and the Secretary have during the appeal process?

Both the Indian Tribe and the Secretary have the same rights during the appeal process. These rights include the right to:

(a) Be represented by legal counsel;

(b) Have the parties provide witnesses who have knowledge of the relevant issues, including specific witnesses with that knowledge, who are requested by either party;

(c) Cross-examine witnesses;

(d) Introduce oral or documentary evidence, or both;

(e) Require that oral testimony be under oath;

(f) Receive a copy of the transcript of the hearing, and copies of all documentary evidence which is introduced at the hearing;

(g) Compel the presence of witnesses, or the production of documents, or both, by subpoena at hearings or at depositions;

(h) Take depositions, to request the production of documents, to serve interrogatories on other parties, and to request admissions; and

(i) Any other procedural rights under the Administrative Procedure Act, 5 U.S.C. 556.

§ 137.432 What happens after the hearing?

(a) Within 30 days of the end of the formal hearing or any post-hearing briefing schedule established by the ALJ, the ALJ shall send all the parties a recommended decision, by certified mail, return receipt requested. The recommended decision must contain the ALJ's findings of fact and conclusions of law on all the issues. The recommended decision shall also state that the Indian Tribe has the right to object to the recommended decision.

(b) The recommended decision shall contain the following statement:

Within 30 days of the receipt of this recommended decision, you may file an objection to the recommended decision with the Secretary under 42 CFR 137.43. An appeal to the Secretary under 42 CFR 137.43 shall be filed at the following address: Department of Health and Human Services, 200 Independence Ave. S.W., Washington, DC, 20201. You shall serve copies of your notice of appeal on the official whose decision is being appealed. You shall certify to the Secretary that you have served this copy. If neither party files an objection to the recommended decision within 30 days, the recommended decision will become final.

§ 137.433 Is the recommended decision always final?

No, any party to the appeal may file precise and specific written objections to the recommended decision, or any other comments, within 30 days of receiving the recommended decision. Objections must be served on all other parties. The recommended decision shall become final for the Secretary 30 days after the Indian Tribe receives the ALJs recommended decision, unless a written statement of objections is filed with the Secretary during the 30-day period. If no party files a written statement of objections within 30 days, the recommended decision shall become final for the Secretary.

§ 137.434 If an Indian Tribe objects to the recommended decision, what will the Secretary do?

(a) The Secretary has 45 days from the date it receives the final authorized submission in the appeal to modify, adopt, or reverse the recommended decision. The Secretary also may remand the case to the IBIA for further proceedings. If the Secretary does not modify or reverse the recommended decision or remand the case to the IBIA during that time, the recommended decision automatically becomes final.

(b) When reviewing the recommended decision, the Secretary may consider and decide all issues properly raised by any party to the appeal, based on the record.

(c) The decision of the Secretary must:

(1) Be in writing;

(2) Specify the findings of fact or conclusions of law that are modified or reversed;

(3) Give reasons for the decision, based on the record; and

(4) State that the decision is final for the Department.

§ 137.435 Will an appeal adversely affect the Indian Tribe's rights in other compact, funding negotiations, or construction project agreement?

No, a pending appeal will not adversely affect or prevent the negotiation or award of another compact, funding agreement, or construction project agreement.

§ 137.436 Will the decisions on appeal be available for the public to review?

Yes, all final decisions must be published for the Department under this subpart. Decisions can be found on the Department's website.

APPEALS OF AN IMMEDIATE REASSUMPTION OF A SELF-GOVERNANCE PROGRAM

§ 137.440 What happens in the case of an immediate reassumption under section 507(a)(2)(C) of the Act [25 U.S.C. 458aaa–6(a)(2)(C)]?

(a) The Secretary may, upon written notification to the Self-Governance Tribe, immediately reassume operation of a program, service, function, or activity (or portion thereof) if:

(1) The Secretary makes a finding of imminent substantial and irreparable endangerment of the public health caused by an act or omission of the Self-Governance Tribe; and

(2) The endangerment arises out of a failure to carry out the compact or funding agreement.

(b) When the Secretary advises a Self-Governance Tribe that the Secretary intends to take an action referred to in paragraph (a) of this section, the Secretary must also notify the Deputy Director of the Office of Hearings and Appeals, Department of the Interior, 4015 Wilson Boulevard, Arlington, VA 22203.

§ 137.441 Will there be a hearing?

Yes, unless the Self-Governance Tribe waives its right to a hearing in writing. The Deputy Director of the Office of Hearings and Appeals must appoint an Administrative Law Judge to hold a hearing,

(a) The hearing must be held within 10 days of the date of the notice referred to in § 137.440 unless the Self-Governance Tribe agrees to a later date.

(b) If possible, the hearing will be held at the office of the Self-Governance Tribe. If the hearing is held more than 50 miles from the office of the Self-Governance Tribe, the Secretary must arrange to pay transportation costs and per diem for incidental expenses. This will allow for adequate representation of the Self-Governance Tribe.

§ 137.442 What happens after the hearing?

(a) Within 30 days after the end of the hearing or any post-hearing briefing schedule established by the ALJ, the ALJ must send all parties a recommended decision by certified mail, return receipt requested. The recommended decision shall contain the ALJs findings of fact and conclusions of law on all the issues. The recommended decision must also state that the Self-Governance Tribe has the right to object to the recommended decision.

(b) The recommended decision must contain the following statement:

Within 15 days of the receipt of this recommended decision, you may file an objection to the recommended decision with the Secretary under § 137.443. An appeal to the Secretary under 25 CFR 900.165(b) shall be filed at the following address: Department of Health and Human Services, 200 Independence Ave. SW., Washington, DC 20201. You shall serve copies of your notice of appeal on the official whose decision is being appealed. You shall certify to the Secretary that you have served this copy. If neither party files an objection to the recommended decision within 15 days, the recommended decision will become final.

§ 137.443 Is the recommended decision always final?

No, any party to the appeal may file precise and specific written objections to the recommended decision, or any other comments, within 15 days of receiving the recommended decision. The objecting party must serve a copy of its objections on the other party. The recommended decision will become final 15 days after the Self-Governance Tribe receives the ALJs recommended decision, unless a written statement of objections is filed with the Secretary during the 15-day period. If no party files a written statement of objections within 15 days, the recommended decision will become final.

§ 137.444 If a Self-Governance Tribe objects to the recommended decision, what action will the Secretary take?

(a) The Secretary has 15 days from the date the Secretary receives timely written objections to modify, adopt, or reverse the recommended decision. If the Secretary does not modify or reverse the recommended decision during that time, the recommended decision automatically becomes final.

(b) When reviewing the recommended decision, the Secretary may consider and decide all issues properly raised by any party to the appeal, based on the record.

(c) The decision of the Secretary must:

(1) Be in writing;

(2) Specify the findings of fact or conclusions of law that are modified or reversed;

(3) Give reasons for the decision, based on the record; and

(4) State that the decision is final for the Secretary.

§ 137.445 Will an immediate reassumption appeal adversely affect the Self-Governance Tribe's rights in other self-governance negotiations?

No, a pending appeal will not adversely affect or prevent the negotiation or award of another compact, funding agreement, or construction project agreement.

EQUAL ACCESS TO JUSTICE ACT FEES

§ 137.450 Does the Equal Access to Justice Act (EAJA) apply to appeals under this subpart?

Yes, EAJA claims against the Department will be heard pursuant to 25 CFR 900.177.

PARTS 138–199 [RESERVED]

CHAPTERS II–III [RESERVED]