AUTHENTICATED
U.S. GOVERNMENT
INFORMATION
GPO

Code of Federal Regulations

49

Parts 572 to 999

Revised as of October 1, 2010

Transportation

Containing a codification of documents of general applicability and future effect

As of October 1, 2010

With Ancillaries

Published by
Office of the Federal Register
National Archives and Records
Administration

A Special Edition of the Federal Register

U.S. GOVERNMENT OFFICIAL EDITION NOTICE

Legal Status and Use of Seals and Logos

The seal of the National Archives and Records Administration (NARA) authenticates the Code of Federal Regulations (CFR) as the official codification of Federal regulations established under the Federal Register Act. Under the provisions of 44 U.S.C. 1507, the contents of the CFR, a special edition of the Federal Register, shall be judicially noticed. The CFR is prima facie evidence of the original documents published in the Federal Register (44 U.S.C. 1510).

It is prohibited to use NARA's official seal and the stylized Code of Federal Regulations logo on any republication of this material without the express, written permission of the Archivist of the United States or the Archivist's designee. Any person using NARA's official seals and logos in a manner inconsistent with the provisions of 36 CFR part 1200 is subject to the penalties specified in 18 U.S.C. 506, 701, and 1017.

Use of ISBN Prefix

This is the Official U.S. Government edition of this publication and is herein identified to certify its authenticity. Use of the 0–16 ISBN prefix is for U.S. Government Printing Office Official Editions only. The Superintendent of Documents of the U.S. Government Printing Office requests that any reprinted edition clearly be labeled as a copy of the authentic work with a new ISBN.

U.S. GOVERNMENT PRINTING OFFICE

U.S. Superintendent of Documents • Washington, DC 20402–0001

http://bookstore.gpo.gov

Phone: toll-free (866) 512-1800; DC area (202) 512-1800

Table of Contents

	Page
Explanation	v
Title 49:	
SUBTITLE B—OTHER REGULATIONS RELATING TO TRANSPORTATION (CONTINUED)	
Chapter V—National Highway Traffic Safety Administration, Department of Transportation, (Continued)	5
Chapter VI—Federal Transit Administration, Department of Transportation	401
Chapter VII—National Railroad Passenger Corporation (AMTRAK)	513
Chapter VIII—National Transportation Safety Board	529
Finding Aids:	
Table of CFR Titles and Chapters	621
Alphabetical List of Agencies Appearing in the CFR	641
List of CFR Sections Affected	651

Cite this Code: CFR

To cite the regulations in this volume use title, part and section number. Thus, 49 CFR 572.1 *refers to title 49, part 572, section 1.*

Explanation

The Code of Federal Regulations is a codification of the general and permanent rules published in the Federal Register by the Executive departments and agencies of the Federal Government. The Code is divided into 50 titles which represent broad areas subject to Federal regulation. Each title is divided into chapters which usually bear the name of the issuing agency. Each chapter is further subdivided into parts covering specific regulatory areas.

Each volume of the Code is revised at least once each calendar year and issued on a quarterly basis approximately as follows:

Title 1 through Title 16.....as of January 1
Title 17 through Title 27.....as of April 1
Title 28 through Title 41.....as of July 1
Title 42 through Title 50.....as of October 1

The appropriate revision date is printed on the cover of each volume.

LEGAL STATUS

The contents of the Federal Register are required to be judicially noticed (44 U.S.C. 1507). The Code of Federal Regulations is prima facie evidence of the text of the original documents (44 U.S.C. 1510).

HOW TO USE THE CODE OF FEDERAL REGULATIONS

The Code of Federal Regulations is kept up to date by the individual issues of the Federal Register. These two publications must be used together to determine the latest version of any given rule.

To determine whether a Code volume has been amended since its revision date (in this case, October 1, 2010), consult the ''List of CFR Sections Affected (LSA),'' which is issued monthly, and the ''Cumulative List of Parts Affected,'' which appears in the Reader Aids section of the daily Federal Register. These two lists will identify the Federal Register page number of the latest amendment of any given rule.

EFFECTIVE AND EXPIRATION DATES

Each volume of the Code contains amendments published in the Federal Register since the last revision of that volume of the Code. Source citations for the regulations are referred to by volume number and page number of the Federal Register and date of publication. Publication dates and effective dates are usually not the same and care must be exercised by the user in determining the actual effective date. In instances where the effective date is beyond the cutoff date for the Code a note has been inserted to reflect the future effective date. In those instances where a regulation published in the Federal Register states a date certain for expiration, an appropriate note will be inserted following the text.

OMB CONTROL NUMBERS

The Paperwork Reduction Act of 1980 (Pub. L. 96–511) requires Federal agencies to display an OMB control number with their information collection request.

Many agencies have begun publishing numerous OMB control numbers as amendments to existing regulations in the CFR. These OMB numbers are placed as close as possible to the applicable recordkeeping or reporting requirements.

OBSOLETE PROVISIONS

Provisions that become obsolete before the revision date stated on the cover of each volume are not carried. Code users may find the text of provisions in effect on a given date in the past by using the appropriate numerical list of sections affected. For the period before January 1, 2001, consult either the List of CFR Sections Affected, 1949–1963, 1964–1972, 1973–1985, or 1986–2000, published in eleven separate volumes. For the period beginning January 1, 2001, a ''List of CFR Sections Affected'' is published at the end of each CFR volume.

''[RESERVED]'' TERMINOLOGY

The term ''[Reserved]'' is used as a place holder within the Code of Federal Regulations. An agency may add regulatory information at a ''[Reserved]'' location at any time. Occasionally ''[Reserved]'' is used editorially to indicate that a portion of the CFR was left vacant and not accidentally dropped due to a printing or computer error.

INCORPORATION BY REFERENCE

What is incorporation by reference? Incorporation by reference was established by statute and allows Federal agencies to meet the requirement to publish regulations in the Federal Register by referring to materials already published elsewhere. For an incorporation to be valid, the Director of the Federal Register must approve it. The legal effect of incorporation by reference is that the material is treated as if it were published in full in the Federal Register (5 U.S.C. 552(a)). This material, like any other properly issued regulation, has the force of law.

What is a proper incorporation by reference? The Director of the Federal Register will approve an incorporation by reference only when the requirements of 1 CFR part 51 are met. Some of the elements on which approval is based are:

(a) The incorporation will substantially reduce the volume of material published in the Federal Register.

(b) The matter incorporated is in fact available to the extent necessary to afford fairness and uniformity in the administrative process.

(c) The incorporating document is drafted and submitted for publication in accordance with 1 CFR part 51.

What if the material incorporated by reference cannot be found? If you have any problem locating or obtaining a copy of material listed as an approved incorporation by reference, please contact the agency that issued the regulation containing that incorporation. If, after contacting the agency, you find the material is not available, please notify the Director of the Federal Register, National Archives and Records Administration, 8601 Adelphi Road, College Park, MD 20740-6001, or call 202-741-6010.

CFR INDEXES AND TABULAR GUIDES

A subject index to the Code of Federal Regulations is contained in a separate volume, revised annually as of January 1, entitled CFR INDEX AND FINDING AIDS. This volume contains the Parallel Table of Authorities and Rules. A list of CFR titles, chapters, subchapters, and parts and an alphabetical list of agencies publishing in the CFR are also included in this volume.

An index to the text of ''Title 3—The President'' is carried within that volume.

The Federal Register Index is issued monthly in cumulative form. This index is based on a consolidation of the ''Contents'' entries in the daily Federal Register.

A List of CFR Sections Affected (LSA) is published monthly, keyed to the revision dates of the 50 CFR titles.

REPUBLICATION OF MATERIAL

There are no restrictions on the republication of material appearing in the Code of Federal Regulations.

INQUIRIES

For a legal interpretation or explanation of any regulation in this volume, contact the issuing agency. The issuing agency's name appears at the top of odd-numbered pages.

For inquiries concerning CFR reference assistance, call 202–741–6000 or write to the Director, Office of the Federal Register, National Archives and Records Administration, 8601 Adelphi Road, College Park, MD 20740-6001 or e-mail fedreg.info@nara.gov.

SALES

The Government Printing Office (GPO) processes all sales and distribution of the CFR. For payment by credit card, call toll-free, 866-512-1800, or DC area, 202-512-1800, M-F 8 a.m. to 4 p.m. e.s.t. or fax your order to 202-512-2250, 24 hours a day. For payment by check, write to: US Government Printing Office – New Orders, P.O. Box 979050, St. Louis, MO 63197-9000. For GPO Customer Service call 202-512-1803.

ELECTRONIC SERVICES

The full text of the Code of Federal Regulations, the LSA (List of CFR Sections Affected), The United States Government Manual, the Federal Register, Public Laws, Public Papers, Daily Compilation of Presidential Documents and the Privacy Act Compilation are available in electronic format via *Federalregister.gov*. For more information, contact Electronic Information Dissemination Services, U.S. Government Printing Office. Phone 202-512-1530, or 888-293-6498 (toll-free). E-mail, *gpoaccess@gpo.gov*.

The Office of the Federal Register also offers a free service on the National Archives and Records Administration's (NARA) World Wide Web site for public law numbers, Federal Register finding aids, and related information. Connect to NARA's web site at *www.archives.gov/federal-register*. The NARA site also contains links to GPO Access.

RAYMOND A. MOSLEY,
Director,
Office of the Federal Register.
October 1, 2010.

THIS TITLE

Title 49—TRANSPORTATION is composed of nine volumes. The parts in these volumes are arranged in the following order: Parts 1–99, parts 100–185, parts 186–199, parts 200–299, parts 300–399, parts 400–571, parts 572–999, parts 1000–1199, and part 1200 to end. The first volume (parts 1–99) contains current regulations issued under subtitle A—Office of the Secretary of Transportation; the second volume (parts 100–185) and the third volume (parts 186–199) contain the current regulations issued under chapter I—Pipeline and Hazardous Materials Safety Administration (DOT); the fourth volume (parts 200–299) contains the current regulations issued under chapter II—Federal Railroad Administration (DOT); the fifth volume (parts 300–399) contains the current regulations issued under chapter III—Federal Motor Carrier Safety Administration (DOT); the sixth volume (parts 400–571) contains the current regulations issued under chapter IV—Coast Guard (DHS), and some of chapter V—National Highway Traffic Safety Administration (DOT); the seventh volume (parts 572–999) contains the rest of the regulations issued under chapter IV, and the current regulations issued under chapter VI—Federal Transit Administration (DOT), chapter VII—National Railroad Passenger Corporation (AMTRAK), and chapter VIII—National Transportation Safety Board; the eighth volume (parts 1000–1199) contains the current regulations issued under chapter X—Surface Transportation Board and the ninth volume (part 1200 to end) contains the current regulations issued under chapter X—Surface Transportation Board, chapter XI—Research and Innovative Technology Administration, and chapter XII—Transportation Security Administration, Department of Transportation. The contents of these volumes represent all current regulations codified under this title of the CFR as of October 1, 2010.

In the volume containing parts 100–185, see § 172.101 for the Hazardous Materials Table. The Federal Motor Vehicle Safety Standards appear in part 571.

Redesignation tables for chapter III—Federal Motor Carrier Safety Administration, Department of Transportation and chapter XII—Transportation Security Administration, Department of Transportation appear in the Finding Aids section of the fifth and ninth volumes.

For this volume, Susannah C. Hurley was Chief Editor. The Code of Federal Regulations publication program is under the direction of Michael L. White, assisted by Ann Worley.

Title 49—Transportation

(This book contains parts 572 to 999)

SUBTITLE B—OTHER REGULATIONS RELATING TO TRANSPORTATION (CONTINUED)

Part

CHAPTER V—National Highway Traffic Safety Administration, Department of Transportation (Continued) 572

CHAPTER VI—Federal Transit Administration, Department of Transportation 601

CHAPTER VII—National Railroad Passenger Corporation (AMTRAK) 700

CHAPTER VIII—National Transportation Safety Board 800

Subtitle B—Other Regulations Relating to Transportation (Continued)

CHAPTER V—NATIONAL HIGHWAY TRAFFIC SAFETY ADMINISTRATION, DEPARTMENT OF TRANSPORTATION (CONTINUED)

Part		*Page*
572	Anthropomorphic test devices	7
573	Defect and noncompliance responsibility and reports	160
574	Tire identification and recordkeeping	173
575	Consumer information	182
576	Record retention	220
577	Defect and noncompliance notification	221
578	Civil and criminal penalties	231
579	Reporting of information and communications about potential defects	234
580	Odometer disclosure requirements	258
581	Bumper standard	267
582	Insurance cost information regulation	271
583	Automobile parts content labeling	272
585	Phase-in reporting requirements	284
586	[Reserved]	
587	Deformable barriers	299
588	Child restraint systems recordkeeping requirements	308
589–590	[Reserved]	
591	Importation of vehicles and equipment subject to Federal safety, bumper and theft prevention standards	309
592	Registered importers of vehicles not originally manufactured to conform to the Federal motor vehicle safety standards	320
593	Determinations that a vehicle not originally manufactured to conform to the Federal motor vehicle safety standards is eligible for importation	333
594	Schedule of fees authorized by 49 U.S.C. 30141	347
595	Make inoperative exemptions	351
596–598	[Reserved]	

Part		Page
599	Requirements and procedures for Consumer Assistance to Recycle and Save Act program	368

PART 572—ANTHROPOMORPHIC TEST DEVICES

Subpart A—General

Sec.
572.1 Scope.
572.2 Purpose.
572.3 Application.
572.4 Terminology.

Subpart B—50th Percentile Male

572.5 General description.
572.6 Head.
572.7 Neck.
572.8 Thorax.
572.9 Lumbar spine, abdomen, and pelvis.
572.10 Limbs.
572.11 Test conditions and instrumentation.

Subpart C—3-Year-Old Child

572.15 General description.
572.16 Head.
572.17 Neck.
572.18 Thorax.
572.19 Lumbar spine, abdomen and pelvis.
572.20 Limbs.
572.21 Test conditions and instrumentation.

Subpart D—6-Month-Old Infant

572.25 General description.

Subpart E—Hybrid III Test Dummy

572.30 Incorporated materials.
572.31 General description.
572.32 Head.
572.33 Neck.
572.34 Thorax.
572.35 Limbs.
572.36 Test conditions and instrumentation.

Subpart F—Side Impact Dummy 50th Percentile Male

572.40 Incorporated materials.
572.41 General description.
572.42 Thorax.
572.43 Lumbar spine and pelvis.
572.44 Instrumentation and test conditions.
APPENDIX A TO SUBPART F

Subparts G–H [Reserved]

Subpart I—6-Year-Old Child

572.70 Incorporation by reference.
572.71 General description.
572.72 Head assembly and test procedure.
572.73 Neck assembly and test procedure.
572.74 Thorax assembly and test procedure.
572.75 Lumbar spine, abdomen, and pelvis assembly and test procedure.
572.76 Limbs assembly and test procedure.
572.77 Instrumentation.
572.78 Performance test conditions.
FIGURES TO SUBPART I

Subpart J—9-Month Old Child

572.80 Incorporated materials.
572.81 General description.
572.82 Head.
572.83 Head-neck.
572.84 Thorax.
572.85 Lumbar spine flexure.
572.86 Test conditions and dummy adjustment.

Subpart K—Newborn Infant

572.90 Incorporation by reference.
572.91 General description.

Subpart L—Free Motion Headform

572.100 Incorporation by reference.
572.101 General description.
572.102 Drop test.
572.103 Test conditions and instrumentation.

Subpart M—Side Impact Hybrid Dummy 50th Percentile Male.

572.110 Materials incorporated by reference.
572.111 General description.
572.112 Head assembly.
572.113 Neck assembly.
572.114 Thorax.
572.115 Lumbar spine and pelvis.
572.116 Instrumentation and test conditions.

Subpart N—Six-year-old Child Test Dummy, Beta Version

572.120 Incorporation by reference.
572.121 General description.
572.122 Head assembly and test procedure.
572.123 Neck assembly and test procedure.
572.124 Thorax assembly and test procedure.
572.125 Upper and lower torso assemblies and torso flexion test procedure.
572.126 Knees and knee impact test procedure.
572.127 Test conditions and instrumentation.
FIGURES TO SUBPART N

Subpart O—Hybrid III 5th Percentile Female Test Dummy, Alpha Version

572.130 Incorporation by reference.
572.131 General description.
572.132 Head assembly and test procedure.
572.133 Neck assembly and test procedure.
572.134 Thorax assembly and test procedure.
572.135 Upper and lower torso assemblies and torso flexion test procedure.
572.136 Knees and knee impact test procedure.

572.137 Test conditions and instrumentation.

FIGURES TO SUBPART O

Subpart P—Hybrid III 3-Year-Old Child Crash Test Dummy, Alpha Version

572.140 Incorporation by reference.
572.141 General description.
572.142 Head assembly and test procedure.
572.143 Neck-headform assembly and test procedure.
572.144 Thorax assembly and test procedure.
572.145 Upper and lower torso assemblies and torso flexion test procedure.
572.146 Test condition and instrumentation.

FIGURES TO SUBPART P

Subpart R—CRABI 12-Month-Old Infant Crash Test Dummy, Alpha Version

572.150 Incorporation by reference.
572.151 General description.
572.152 Head assembly and test procedure.
572.153 Neck-headform assembly and test procedure.
572.154 Thorax assembly and test procedure.
572.155 Test condition and instrumentation.

FIGURES TO SUBPART R

Subpart S—Hybrid III Six-Year-Old Weighted Child Test Dummy

572.160 Incorporation by reference.
572.161 General description.
572.162 Head assembly and test procedure.
572.163 Neck assembly and test procedure.
572.164 Thorax assembly and test procedure.
572.165 Upper and lower torso assemblies and torso flexion test procedure.
572.166 Knees and knee impact test procedure.
572.167 Test conditions and instrumentation.

FIGURES TO SUBPART S

Subpart T [Reserved]

Subpart U— ES–2re Side Impact Crash Test Dummy, 50th Percentile Adult Male

572.180 Incorporated materials.
572.181 General description.
572.182 Head assembly.
572.183 Neck assembly.
572.184 Shoulder assembly.
572.185 Thorax (upper torso) assembly.
572.186 Abdomen assembly.
572.187 Lumbar spine.
572.188 Pelvis.
572.189 Instrumentation and test conditions.

APPENDIX A TO SUBPART U OF PART 572—FIGURES

Subpart V, SID–IIsD Side Impact Crash Test Dummy, Small Adult Female

572.190 Incorporated materials.
572.191 General description.
572.192 Head assembly.
572.193 Neck assembly.
572.194 Shoulder.
572.195 Thorax with arm.
572.196 Thorax without arm.
572.197 Abdomen.
572.198 Pelvis acetabulum.
572.199 Pelvis iliac.
572.200 Instrumentation and test conditions.

APPENDIX A TO SUBPART V OF PART 572—FIGURES

AUTHORITY: 49 U.S.C. 322, 30111, 30115, 30117 and 30166; delegation of authority at 49 CFR 1.50.

EDITORIAL NOTES: 1. For compliance provisions relating to a vehicle's conformance with the performance requirements of Standard No. 208 (§ 571.208) relating to the part 572 test dummy, see the ''Effective Date Note'' at subpart E of this part.

2. Nomenclature changes to part 572 appear at 69 FR 18803, Apr. 9, 2004.

Subpart A—General

§ 572.1 Scope.

This part describes the anthropomorphic test devices that are to be used for compliance testing of motor vehicles and motor vehicle equipment with motor vehicle safety standards.

[60 FR 43058, Aug. 18, 1995]

§ 572.2 Purpose.

The design and performance criteria specified in this part are intended to describe measuring tools with sufficient precision to give repetitive and correlative results under similar test conditions and to reflect adequately the protective performance of a vehicle or item of motor vehicle equipment with respect to human occupants.

[38 FR 20451, Aug. 1, 1973, as amended at 42 FR 7151, Feb. 7, 1977]

§ 572.3 Application.

This part does not in itself impose duties or liabilities on any person. It is a description of tools that measure the performance of occupant protection systems required by the safety standards that incorporate it. It is designed to be referenced by, and become a part

of, the test procedures specified in motor vehicle safety standards such as Standard No. 208, Occupant Crash Protection.

[38 FR 20451, Aug. 1, 1973, as amended at 42 FR 7152, Feb. 7, 1977]

§ 572.4 Terminology.

(a) The term *dummy*, when used in this subpart A, refers to any test device described by this part. The term *dummy*, when used in any other subpart of this part, refers to the particular dummy described in that part.

(b) Terms describing parts of the dummy, such as *head*, are the same as names for corresponding parts of the human body.

(c) The term *unimodal*, when used in subparts C and I, refers to an acceleration-time curve which has only one prominent peak.

[38 FR 20451, Aug. 1, 1973, as amended at 42 FR 7152, Feb. 7, 1977; 44 FR 76530, Dec. 27, 1979; 56 FR 57836, Nov. 14, 1991]

Subpart B—50th Percentile Male

§ 572.5 General description.

(a) The dummy consists of the component assemblies specified in Figure 1, which are described in their entirety by means of approximately 250 drawings and specifications that are grouped by component assemblies under the following nine headings:

SA 150 M070—Right arm assembly
SA 150 M071—Left arm assembly
SA 150 M050—Lumbar spine assembly
SA 150 M060—Pelvis and abdomen assembly
SA 150 M080—Right leg assembly
SA 150 M081—Left leg assembly
SA 150 M010—Head assembly
SA 150 M020—Neck assembly
SA 150 M030—Shoulder-thorax assembly.

(b) The drawings and specifications referred to in this regulation that are not set forth in full are hereby incorporated in this part by reference. These materials are thereby made part of this regulation. The Director of the Federal Register has approved the materials incorporated by reference. For materials subject to change, only the specific version approved by the Director of the Federal Register and specified in the regulation are incorporated. A notice of any change will be published in the FEDERAL REGISTER. As a convenience to the reader, the materials incorporated by reference are listed in the Finding Aid Table found at the end of this volume of the Code of Federal Regulations.

(c) The materials incorporated by reference are available for examination in Docket 73–08, Docket Section, National Highway Traffic Safety Administration, Room 5109, 400 Seventh Street SW., Washington, DC, 20590. Copies may be obtained from Rowley-Scher Reprographics, Inc., 1216 K Street NW., Washington, DC 20005 ((202) 628–6667). The drawings and specifications are also on file in the reference library of the Office of the Federal Register, National Archives and Records Administration, Washington, DC.

(d) Adjacent segments are joined in a manner such that throughout the range of motion and also under crash impact conditions there is no contact between metallic elements except for contacts that exist under static conditions.

(e) The structural properties of the dummy are such that the dummy conforms to this part in every respect both before and after being used in vehicle tests specified in Standard No. 208 of this chapter (571.208).

(f) A specimen of the dummy is available for surface measurements and access can be arranged by contacting: Office of Vehicle Safety Standards, National Highway Traffic Safety Administration, 400 Seventh Street, SW., Washington, DC 20590.

[50 FR 25423, June 19, 1985]

§ 572.6 Head.

(a) The head consists of the assembly shown as number SA 150 M010 in Figure 1 and conforms to each of the drawings subtended by number SA 150 M010.

(b) When the head is dropped from a height of 10 inches in accordance with paragraph (c) of this section, the peak resultant accelerations at the location of the accelerometers mounted in the head form in accordance with § 572.11(b) shall be not less than 210g, and not more than 260g. The acceleration/time curve for the test shall be unimodal and shall lie at or above the 100g level

for an interval not less than 0.9 milliseconds and not more than 1.5 milliseconds. The lateral acceleration vector shall not exceed 10g.

(c) Test procedure:

(1) Suspend the head as shown in Figure 2, so that the lowest point on the forehead is 0.5 inches below the lowest point on the dummy's nose when the midsagittal plane is vertical.

(2) Drop the head from the specified height by means that ensures instant release onto a rigidly supported flat horizontal steel plate, 2 inches thick and 2 feet square, which has a clean, dry surface and any microfinish of not less than 8 microinches (rms) and not more than 80 microinches (rms).

(3) Allow a time period of at least 2 hours between successive tests on the same head.

[38 FR 20451, Aug. 1, 1973, as amended at 42 FR 7152, Feb. 7, 1977]

§ 572.7 Neck.

(a) The neck consists of the assembly shown as number SA 150 M020 in Figure 1 and conforms to each of the drawings subtended by number SA 150 M020.

(b) When the neck is tested with the head in accordance with paragraph (c) of this section, the head shall rotate in reference to the pendulum's longitudinal centerline a total of 68° ±5° about its center of gravity, rotating to the extent specified in the following table at each indicated point in time, measured from impact, with a chordal displacement measured at its center of gravity that is within the limits specified. The chordal displacement at time T is defined as the straight line distance between (1) the position relative to the pendulum arm of the head center of gravity at time zero, and (2) the position relative to the pendulum arm of the head center of gravity at time T as illustrated by Figure 3. The peak resultant acceleration recorded at the location of the accelerometers mounted in the head form in accordance with § 572.11(b) shall not exceed 26g. The pendulum shall not reverse direction until the head's center of gravity returns to the original zero time position relative to the pendulum arm.

Rotation (degrees)	Time (ms) ±(2+.08T)	Chordal Displacement (inches ±0.5)
0	0	0.0
30	30	2.6
60	46	4.8
Maximum	60	5.5
60	75	4.8
30	95	2.6
0	112	0.0

(c) Test procedure: (1) Mount the head and neck on a rigid pendulum as specified in Figure 4, so that the head's midsagittal plane is vertical and coincides with the plane of motion of the pendulum's longitudinal centerline. Mount the neck directly to the pendulum as shown in Figure 4.

(2) Release the pendulum and allow it to fall freely from a height such that the velocity at impact is 23.5 ±2.0 feet per second (fps), measured at the center of the accelerometer specified in Figure 4.

(3) Decelerate the pendulum to a stop with an acceleration-time pulse described as follows:

(i) Establish 5g and 20g levels on the a-t curve.

(ii) Establish t_1 at the point where the rising a-t curve first crosses the 5g level, t_2 at the point where the rising a-t curve first crosses the 20g level, t_2 at the point where the decaying a-t curve last crosses the 20g level, and t_4 at the point where the decaying a-t curve first crosses the 5g level.

(iii) t_2–t_1 shall be not more than 3 milliseconds.

(iv) t_3–t_2 shall be not less than 25 milliseconds and not more than 30 milliseconds.

(v) t_4–t_3 shall be not more than 10 milliseconds.

(vi) The average deceleration between t_2 and t_3 shall be not less than 20g and not more than 24g.

(4) Allow the neck to flex without impact of the head or neck with any object other than the pendulum arm.

[38 FR 20451, Aug. 1, 1973, as amended at 42 FR 7152, Feb. 7, 1977; 42 FR 12176, Mar. 3, 1977; 45 FR 40596, June 16, 1980]

§ 572.8 Thorax.

(a) The thorax consists of the assembly shown as number SA 150 M030 in Figure 1, and conforms to each of the

drawings subtended by number SA 150 M030.

(b) The thorax contains enough unobstructed interior space behind the rib cage to permit the midpoint of the sternum to be depressed 2 inches without contact between the rib cage and other parts of the dummy or its instrumentation, except for instruments specified in paragraph (d)(7) of this section.

(c) When impacted by a test probe conforming to §572.11(a) at 14 fps and at 22 fps in accordance with paragraph (d) of this section, the thorax shall resist with forces measured by the test probe of not more than 1450 pounds and 2250 pounds, respectively, and shall deflect by amounts not greater than 1.1 inches and 1.7 inches, respectively. The internal hysteresis in each impact shall not be less than 50 percent and not more than 70 percent.

(d) Test procedure: (1) With the dummy seated without back support on a surface as specified in §572.11(i) and in the orientation specified in §572.11(i), adjust the dummy arms and legs until they are extended horizontally forward parallel to the midsagittal plane.

(2) Place the longitudinal center line of the test probe so that it is 17.7 ±0.1 inches above the seating surface at impact.

(3) Align the test probe specified in §572.11(a) so that at impact its longitudinal centerline coincides within 2 degrees of a horizontal line in the dummy's midsagittal plane.

(4) Adjust the dummy so that the surface area on the thorax immediately adjacent to the projected longitudinal center line of the test probe is vertical. Limb support, as needed to achieve and maintain this orientation, may be provided by placement of a steel rod of any diameter not less than one-quarter of an inch and not more than three-eighths of an inch, with hemispherical ends, vertically under the limb at its projected geometric center.

(5) Impact the thorax with the test probe so that its longitudinal centerline falls within 2 degrees of a horizontal line in the dummy's midsagittal plane at the moment of impact.

(6) Guide the probe during impact so that it moves with no significant lateral, vertical, or rotational movement.

(7) Measure the horizontal deflection of the sternum relative to the thoracic spine along the line established by the longitudinal centerline of the probe at the moment of impact, using a potentiometer mounted inside the sternum.

(8) Measure hysteresis by determining the ratio of the area between the loading and unloading portions of the force deflection curve to the area under the loading portion of the curve.

[38 FR 20451, Aug. 1, 1973, as amended at 42 FR 7152, Feb. 7, 1977]

§572.9 Lumbar spine, abdomen, and pelvis.

(a) The lumbar spine, abdomen, and pelvis consist of the assemblies designated as numbers SA 150 M050 and SA 150 M060 in Figure 1 and conform to the drawings subtended by these numbers.

(b) When subjected to continuously applied force in accordance with paragraph (c) of this section, the lumbar spine assembly shall flex by an amount that permits the rigid thoracic spine to rotate from its initial position in accordance with Figure 11 by the number of degrees shown below at each specified force level, and straighten upon removal of the force to within 12 degrees of its initial position in accordance with Figure 11.

Flexion (degrees)	Force (±6 pounds)
0	0
20	28
30	40
40	52

(c) Test procedure: (1) Assemble the thorax, lumbar spine, pelvic, and upper leg assemblies (above the femur force transducers), ensuring that all component surfaces are clean, dry, and untreated unless otherwise specified, and attach them to the horizontal fixture shown in Figure 5 at the two link rod pins and with the mounting brackets for the lumbar test fixtures illustrated in Figures 6 to 9.

(2) Attach the rear mounting of the pelvis to the pelvic instrument cavity rear face at the four ¼″ cap screw holes and attach the front mounting at the femur axial rotation joint. Tighten the

mountings so that the pelvic-lumbar adapter is horizontal and adjust the femur friction plungers at each hip socket joint to 240 inch-pounds torque.

(3) Flex the thorax forward 50° and then rearward as necessary to return it to its initial position in accordance with Figure 11 unsupported by external means.

(4) Apply a forward force perpendicular to the thorax instrument cavity rear face in the midsagittal plane 15 inches above the top surface of the pelvic-lumbar adapter. Apply the force at any torso deflection rate between .5 and 1.5 degrees per second up to 40° of flexion but no further, continue to apply for 10 seconds that force necessary to maintain 40° of flexion, and record the force with an instrument mounted to the thorax as shown in Figure 5. Release all force as rapidly as possible and measure the return angle 3 minutes after the release.

(d) When the abdomen is subjected to continuously applied force in accordance with paragraph (e) of this section, the abdominal force-deflection curve shall be within the two curves plotted in Figure 10.

(e) Test procedure: (1) Place the assembled thorax, lumbar spine and pelvic assemblies in a supine position on a flat, rigid, smooth, dry, clean horizontal surface, ensuring that all component surfaces are clean, dry, and untreated unless otherwise specified.

(2) Place a rigid cylinder 6 inches in diameter and 18 inches long transversely across the abdomen, so that the cylinder is symmetrical about the midsagittal plane, with its longitudinal centerline horizontal and perpendicular to the midsagittal plane at a point 9.2 inches above the bottom line of the buttocks, measured with the dummy positioned in accordance with Figure 11.

(3) Establish the zero deflection point as the point at which a force of 10 pounds has been reached.

(4) Apply a vertical downward force through the cylinder at any rate between 0.25 and 0.35 inches per second.

(5) Guide the cylinder so that it moves without significant lateral or rotational movement.

[42 FR 7152, Feb. 7, 1977]

§ 572.10 Limbs.

(a) The limbs consist of the assemblies shown as numbers SA 150 M070, SA 150 M071, SA 150 M080, and SA 150 M081 in Figure 1 and conform to the drawings subtended by these numbers.

(b) When each knee is impacted at 6.9 ft/sec. in accordance with paragraph (c) of this section, the maximum force on the femur shall be not more than 2500 pounds and not less than 1850 pounds, with a duration above 1000 pounds of not less than 1.7 milliseconds.

(c) Test procedure: (1) Seat the dummy without back support on a surface as specified in § 572.11(i) that is 17.3 ±0.2 inches above a horizontal surface, oriented as specified in § 572.11(i), and with the hip joint adjustment at any setting between 1g and 2g. Place the dummy legs in planes parallel to its midsagittal plane (knee pivot centerline perpendicular to the midsagittal plane) and with the feet flat on the horizontal surface. Adjust the feet and lower legs until the lines between the midpoints of the knee pivots and the ankle pivots are at any angle not less than 2 degrees and not more than 4 degrees rear of the vertical, measured at the centerline of the knee pivots.

(2) Reposition the dummy if necessary so that the rearmost point of the lower legs at the level one inch below the seating surface remains at any distance not less than 5 inches and not more than 6 inches forward of the forward edge of the seat.

(3) Align the test probe specified in § 572.11(a) so that at impact its longitudinal centerline coincides within ±2° with the longitudinal centerline of the femur.

(4) Impact the knee with the test probe moving horizontally and parallel to the midsagittal plane at the specified velocity.

(5) Guide the probe during impact so that it moves with no significant lateral, vertical, or rotational movement.

[38 FR 20451, Aug. 1, 1973, as amended at 42 FR 7153, Feb. 7, 1977]

§ 572.11 Test conditions and instrumentation.

(a) The test probe used for thoracic and knee impact tests is a cylinder 6 inches in diameter that weighs 51.5

pounds including instrumentation. Its impacting end has a flat right face that is rigid and that has an edge radius of 0.5 inches.

(b) Accelerometers are mounted in the head on the horizontal transverse bulkhead shown in the drawings subreferenced under assembly No. SA 150 M010 in Figure 1, so that their sensitive axes intersect at a point in the midsagittal plane 0.5 inches above the horizontal bulkhead and 1.9 inches ventral of the vertical mating surface of the skull with the skull cover. One accelerometer is aligned with its sensitive axis perpendicular to the horizontal bulkhead in the midsagittal plane and with its seismic mass center at any distance up to 0.3 inches superior to the axial intersection point. Another accelerometer is aligned with its sensitive axis parallel to the horizontal bulkhead and perpendicular to the midsagittal plane, and with its seismic mass center at any distance up to 1.3 inches to the left of the axial intersection point (left side of dummy is the same as that of man). A third accelerometer is aligned with its sensitive axis parallel to the horizontal bulkhead in the midsagittal plane, and with its seismic mass center at any distance up to 1.3 inches dorsal to the axial intersection point.

(c) Accelerometers are mounted in the thorax by means of a bracket attached to the rear vertical surface (hereafter ''attachment surface'') of the thoracic spine so that their sensitive axes intersect at a point in the midsagittal plane 0.8 inches below the upper surface of the plate to which the neck mounting bracket is attached and 3.2 inches perpendicularly forward of the surface to which the accelerometer bracket is attached. One accelerometer has its sensitive axis oriented parallel to the attachment surface in the midsagittal plane, with its seismic mass center at any distance up to 1.3 inches inferior to the intersection of the sensitive axes specified above. Another accelerometer has its sensitive axis oriented parallel to the attachment surface and perpendicular to the midsagittal plane, with its seismic mass center at any distance up to 0.2 inches to the right of the intersection of the sensitive axes specified above. A third accelerometer has its sensitive axis oriented perpendicular to the attachment surface in the midsagittal plane, with its seismic mass center at any distance up to 1.3 inches dorsal to the intersection of the sensitive axes specified above. Accelerometers are oriented with the dummy in the position specified in § 572.11(i).

(d) A force-sensing device is mounted axially in each femur shaft so that the transverse centerline of the sensing element is 4.25 inches from the knee's center of rotation.

(e) The outputs of acceleration and force-sensing devices installed in the dummy and in the test apparatus specified by this part are recorded in individual data channels that conform to the requirements of SAE Recommended Practice J211a, December 1971, with channel classes as follows:

(1) Head acceleration—Class 1000.

(2) Pendulum acceleration—Class 60.

(3) Thorax acceleration—Class 180.

(4) Thorax compression—Class 180.

(5) Femur force—Class 600.

(f) The mountings for sensing devices have no resonance frequency within a range of 3 times the frequency range of the applicable channel class.

(g) Limb joints are set at 1g, barely restraining the weight of the limb when it is extended horizontally. The force required to move a limb segment does not exceed 2g throughout the range of limb motion.

(h) Performance tests are conducted at any temperature from 66 °F to 78 °F and at any relative humidity from 10 percent to 70 percent after exposure of the dummy to these conditions for a period of not less than 4 hours.

(i) For the performance tests specified in §§ 572.8, 572.9, and 572.10, the dummy is positioned in accordance with Figure 11 as follows:

(1) The dummy is placed on a flat, rigid, smooth, clean, dry, horizontal, steel test surface whose length and width dimensions are not less than 16 inches, so that the dummy's midsagittal plane is vertical and centered on the test surface and the rearmost points on its lower legs at the level of the test surface are at any distance not less than 5 inches and not more than 6 inches forward of the forward edge of the test surface.

(2) The pelvis is adjusted so that the upper surface of the lumbar-pelvic adapter is horizontal.

(3) The shoulder yokes are adjusted so that they are at the midpoint of their anterior-posterior travel with their upper surfaces horizontal.

(4) The dummy is adjusted so that the rear surfaces of the shoulders and buttocks are tangent to a transverse vertical plane.

(5) The upper legs are positioned symmetrically about the midsagittal plane so that the distance between the knee pivot bolt heads is 11.6 inches.

(6) The lower legs are positioned in planes parallel to the midsagittal plane so that the lines between the midpoint of the knee pivots and the ankle pivots are vertical.

(j) The dummy's dimensions, as specified in drawing number SA 150 M002, are determined as follows:

(1) With the dummy seated as specified in paragraph (i) of this section, the head is adjusted and secured so that its occiput is 1.7 inches forward of the transverse vertical plane with the vertical mating surface of the skull with its cover parallel to the transverse vertical plane.

(2) The thorax is adjusted and secured so that the rear surface of the chest accelerometer mounting cavity is inclined 3° forward of vertical.

(3) Chest and waist circumference and chest depth measurements are taken with the dummy positioned in accordance with paragraphs (j) (1) and (2) of this section.

(4) The chest skin and abdominal sac are removed and all following measurements are made without them.

(5) Seated height is measured from the seating surface to the uppermost point on the head-skin surface.

(6) Shoulder pivot height is measured from the seating surface to the center of the arm elevation pivot.

(7) H-point locations are measured from the seating surface to the center of the holes in the pelvis flesh covering in line with the hip motion ball.

(8) Knee pivot distance from the backline is measured to the center of the knee pivot bolt head.

(9) Knee pivot distance from floor is measured from the center of the knee pivot bolt head to the bottom of the heel when the foot is horizontal and pointing forward.

(10) Shoulder width measurement is taken at arm elevation pivot center height with the centerlines between the elbow pivots and the shoulder pivots vertical.

(11) Hip width measurement is taken at widest point of pelvic section.

(k) Performance tests of the same component, segment, assembly, or fully assembled dummy are separated in time by a period of not less than 30 minutes unless otherwise noted.

(l) Surfaces of dummy components are not painted except as specified in this part or in drawings subtended by this part.

FIGURE 1

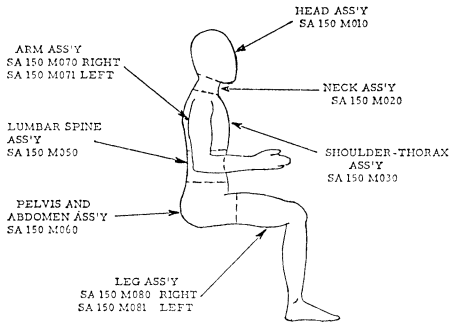

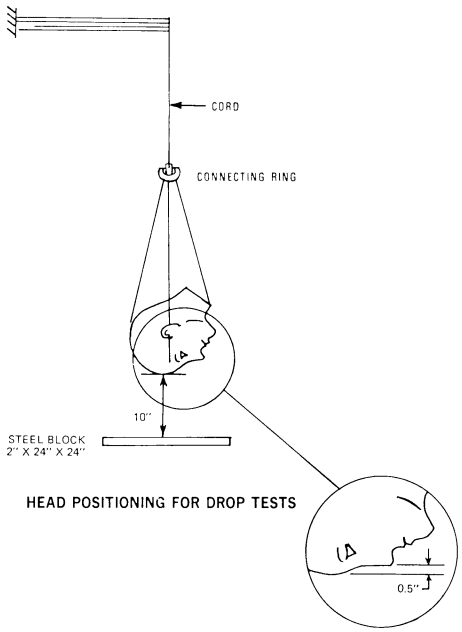

Figure 2

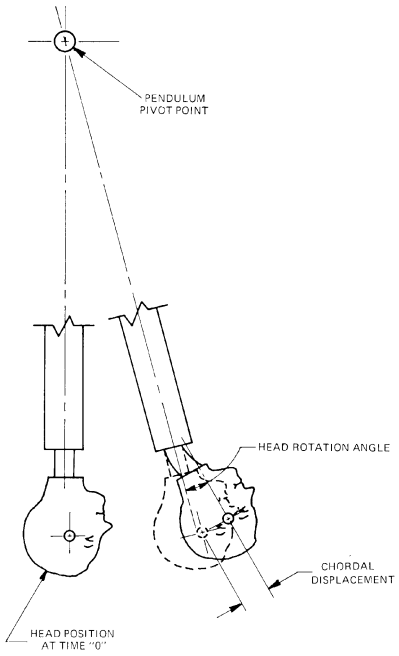

FIGURE NO. 3
NECK COMPONENT TEST

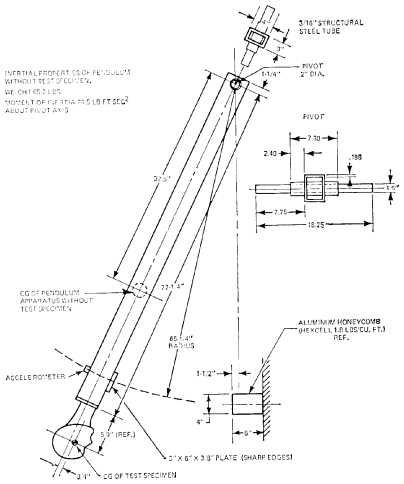

FIGURE NO. 4
NECK COMPONENT TEST

FIGURE NO. 5
LUMBAR FLEXION TEST

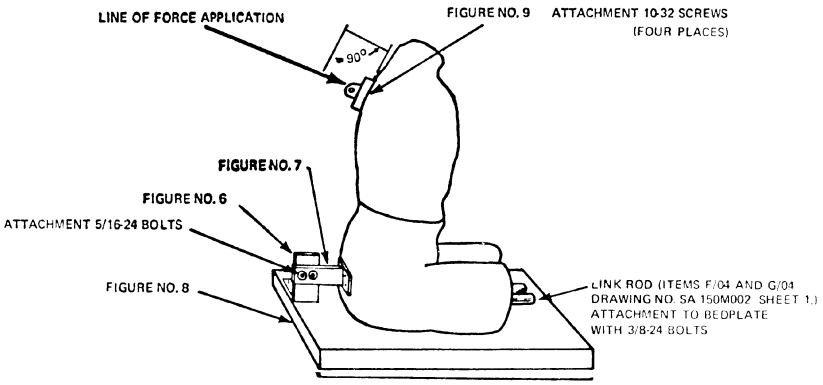

FIGURE NO. 6

SUPPORT BRACKET
LUMBAR TEST FIXTURE

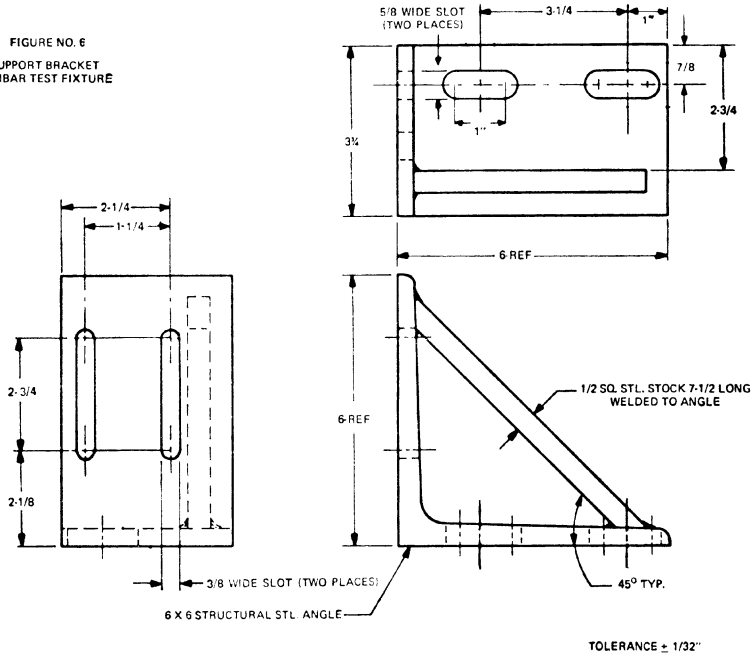

FIGURE NO. 7

MOUNTING BRACKET-LUMBAR TEST FIXTURE

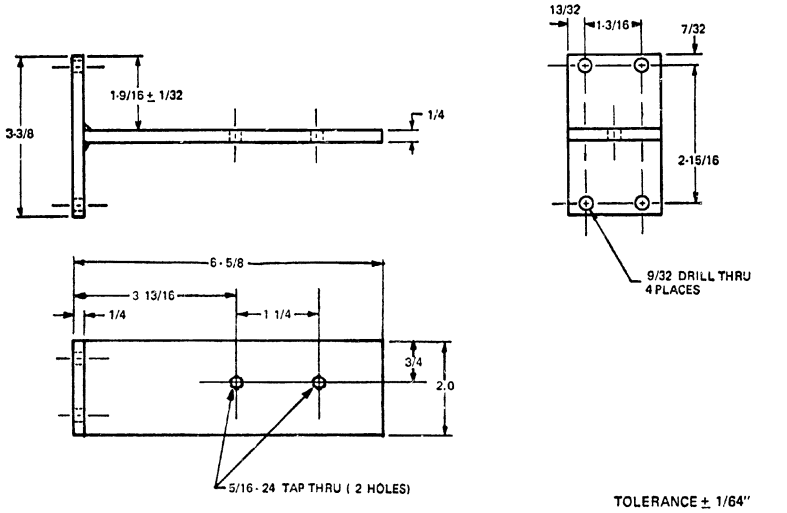

TOLERANCE ± 1/64"
MATERIAL: STEEL
WELDED CONSTRUCTION

FIGURE NO. 8

BEDPLATE - LUMBAR TEST FIXTURE

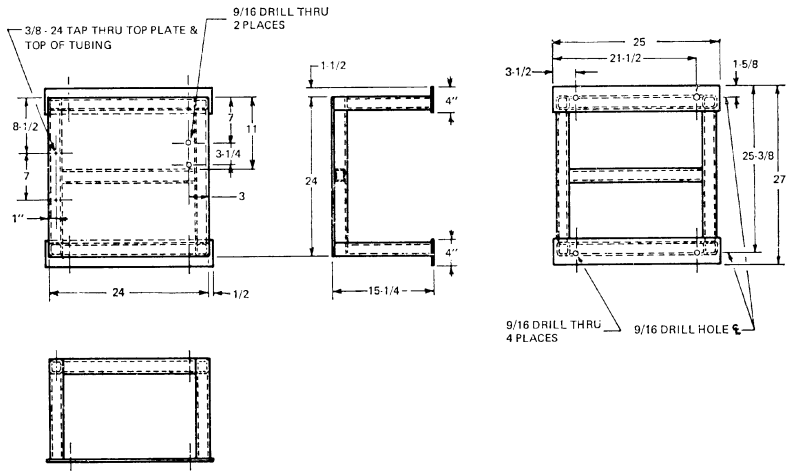

MATL: STEEL - 1/4 THICK PLATE & 2 X 2-1/4 WALL SQ. TUBING
WELDED CONSTRUCTION

TOLERANCE: ± 1/32"

FIGURE 9
Loading Plate- Lumbar Test Fixture

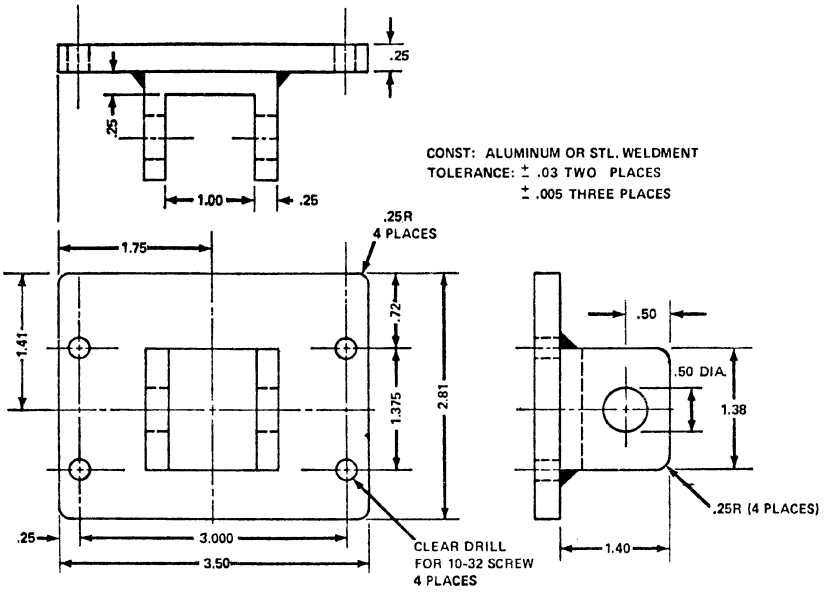

FIGURE NO. 10

ABDOMEN COMPONENT TEST

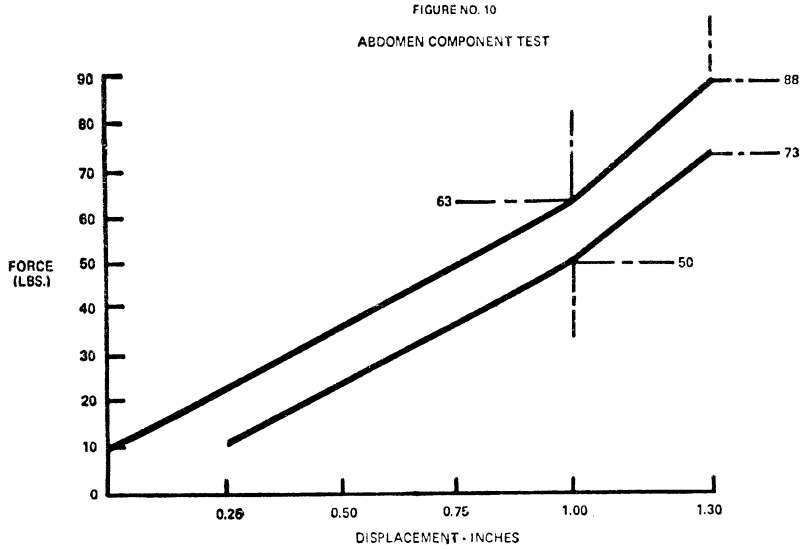

FIGURE No. 11

UPRIGHT SEATED POSITION FOR LINEAR MEASUREMENTS

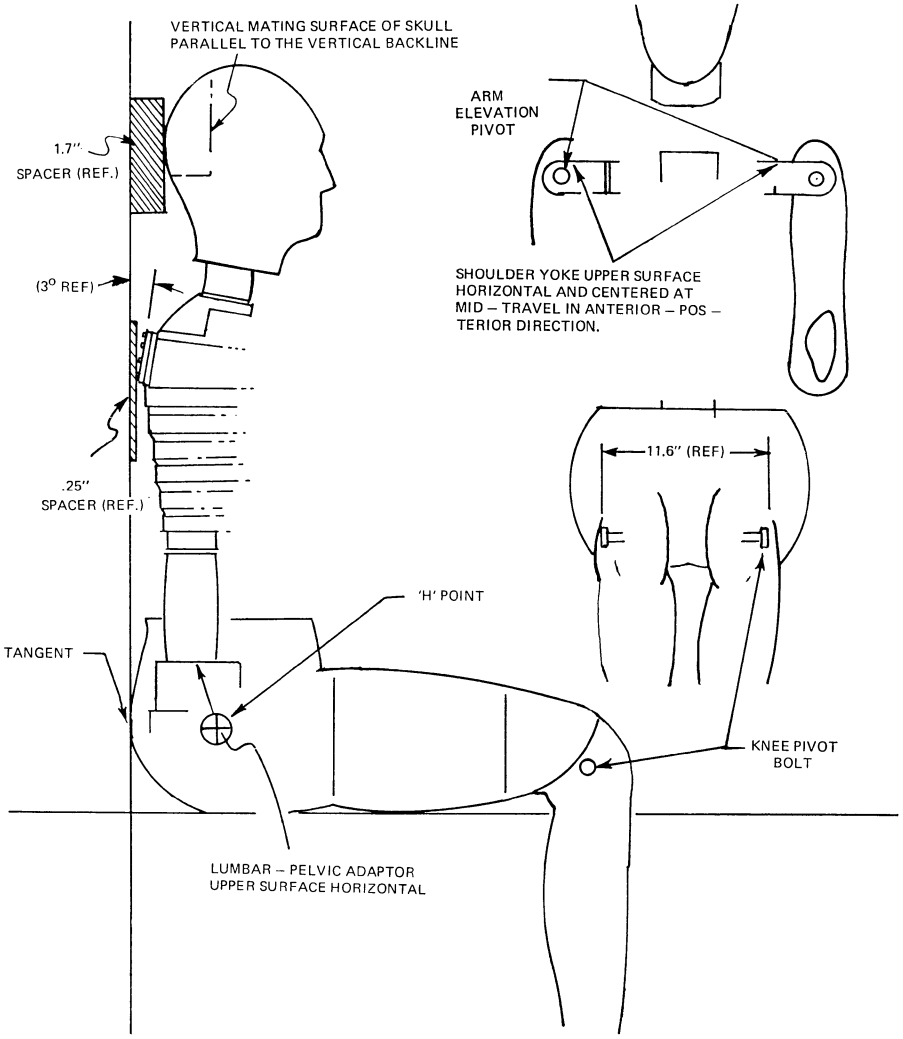

[38 FR 20451, Aug. 1, 1973, as amended at 42 FR 7153, Feb. 7, 1977]

Subpart C—3-Year-Old Child

SOURCE: 44 FR 76530, Dec. 27, 1979, unless otherwise noted.

§ 572.15 General description.

(a) The dummy consists of the component assemblies specified in drawing SA 103C 001, which are described in their entirety by means of approximately 122 drawings and specifications

and an Operation and Maintenance Manual, dated May 28, 1976. The drawings and specifications are grouped by component assemblies under the following thirteen headings:

SA 103C 010 Head Assembly
SA 103C 020 Neck Assembly
SA 103C 030 Torso Assembly
SA 103C 041 Upper Arm Assembly Left
SA 103C 042 Upper Arm Assembly Right
SA 103C 051 Forearm Hand Assembly Left
SA 103C 052 Forearm Hand Assembly Right
SA 103C 061Upper Leg Assembly Left
SA 103C 062 Upper Leg Assembly Right
SA 103C 071 Lower Leg Assembly Left
SA 103C 072 Lower Leg Assembly Right
SA 103C 081 Foot Assembly left
SA 103C 082 Foot Assembly Right.

(b) The drawings, specifications, and operation and maintenance manual referred to in this regulation that are not set forth in full are hereby incorporated in this part by reference. These materials are thereby made part of this regulation. The Director of the Federal Register has approved the materials incorporated by reference. For materials subject to change, only the specific version approved by the Director of the Federal Register and specified in the regulation are incorporated. A notice of any change will be published in the FEDERAL REGISTER. As a convenience to the reader, the materials incorporated by reference are listed in the Finding Aid Table found at the end of this volume of the Code of Federal Regulations.

(c) The materials incorporated by reference are available for examination in Docket 78–09, Room 5109, Docket Section, National Highway Traffic Safety Administration, 400 Seventh Street SW., Washington, DC 20590. Copies may be obtained from Rowley-Scher Reprographics, Inc., 1216 K Street NW., Washington, DC 20005 ((202) 628–6667). The materials are also on file in the reference library of the Office of the Federal Register, National Archives and Records Administration, Washington, DC.

(d) Adjacent segments are joined in a manner such that throughout the range of motion and also under simulated crash-impact conditions there is no contact between metallic elements except for contacts that exist under static conditions.

(e) The structural properties of the dummy are such that the dummy conforms to this part in every respect both before and after being used in vehicle tests specified in Standard No. 213 of this chapter (§ 571.213).

(f) The patterns of all cast and molded parts for reproduction of the molds needed in manufacturing of the dummies can be obtained on a loan basis by manufacturers of the testes dummies, or others if need is shown, from: Office of Vehicle Safety Standards, National Highway Traffic Safety Administration, 400 Seventh Street SW., Washington, DC 20590.

[50 FR 25423, June 19, 1985]

§ 572.16 Head.

(a) The head consists of the assembly designated as SA 103C 010 on drawing No. SA 103C 001, and conforms to either—

(1) Each item specified on drawing SA 103C 002(B), sheet 8; or

(2) Each item specified on drawing SA 103C 002, sheet 8.

(b) When the head is impacted by a test probe specified in § 572.21(a)(1) at 7 fps, then the peak resultant acceleration measured at the location of the accelerometer mounted in the headform according to § 572.21(b) is not less than 95g and not more than 118g.

(1) The recorded acceleration-time curve for this test is unimodal at or above the 50g level, and lies at or above that level for intervals:

(i) In the case of the head assembly specified in paragraph (a)(1) of this section, not less than 1.3 milliseconds and not more than 2.0 milliseconds;

(ii) In the case of the head assembly specified in paragraph (a)(2) of this section, not less than 2.0 milliseconds and not more than 3.0 milliseconds.

(2) The lateral acceleration vector does not exceed 7g.

(c) *Test procedure.* (1) Seat the dummy on a seating surface having a back support as specified in § 572.21(h) and orient the dummy in accordance with § 572.21(h) and adjust the joints of the limbs at any setting between 1g and 2g, which just supports the limbs' weight when the limbs are extended horizontally forward.

(2) Adjust the test probe so that its longitudinal centerline is at the forehead at the point of orthogonal intersection of the head midsagittal plane and the transverse plane which is perpendicular to the ''Z'' axis of the head (longitudinal centerline of the skull anchor) and is located 0.6 ±0.1 inches above the centers of the head center of gravity reference pins and coincides within 2 degrees with the line made by the intersection of horizontal and midsagittal planes passing through this point.

(3) Adjust the dummy so that the surface area on the forehead immediately adjacent to the projected longitudinal centerline of the test probe is vertical.

(4) Impact the head with the test probe so that at the moment of impact the probe's longitudinal centerline falls within 2 degrees of a horizontal line in the dummy's midsagittal plane.

(5) Guide the probe during impact so that it moves with no significant lateral, vertical, or rotational movement.

(6) Allow a time period of at least 20 minutes between successive tests of the head.

[44 FR 76530, Dec. 27, 1979; 45 FR 43353, June 26, 1980, as amended at 45 FR 82267, Dec. 15, 1980; 55 FR 30468, July 26, 1990]

§ 572.17 Neck.

(a)(1) The neck for use with the head assembly described in § 572.16(a)(1) consists of the assembly designated as SA 103C 020 on drawing No. SA 103C 001, conforms to each item specified on drawing No. SA 103C 002(B), sheet 9.

(2) The neck for use with the head assembly described in § 572.16(a)(2) consists of the assembly designated as SA 103C 020 on drawing No. SA 103C 001, and conforms to each item specified on drawing No. SA 103C 002, sheet 9.

(b) When the head-neck assembly is tested in accordance with paragraph (c) of this section, the head shall rotate in reference to the pendulum's longitudinal centerline a total of 84 degrees ± 8 degrees about its center of gravity, rotating to the extent specified in the following table at each indicated point in time, measured from impact, with the chordal displacement measured at its center of gravity. The chordal displacement at time T is defined as the straight line distance between (1) the position relative to the pendulum arm of the head center of gravity at time zero, and (2) the position relative to the pendulum arm of the head center of gravity at time T as illustrated by figure 3. The peak resultant acceleration recorded at the location of the accelerometers mounted in the headform in accordance with § 572.21(b) shall not exceed 30g. The pendulum shall not reverse direction until the head's center of gravity returns to the original zero time position relative to the pendulum arm.

Rotation (degrees)	Time (ms) ±(2+.08T)	Chordal displacement (inches ±0.8)
0	0	0
30	21	2.2
60	36	4.3
Maximum	62	5.8
60	91	4.3
30	108	2.2
0	123	0

(c) *Test procedure.* (1) Mount the head and neck on a rigid pendulum as specified in Figure 4, so that the head's midsagittal plane is vertical and coincides with the plane of motion of the pendulum's longitudinal centerline. Mount the neck directly to the pendulum as shown in Figure 15.

(2) Release the pendulum and allow it to fall freely from a height such that the velocity at impact is 17.00 ±1.0 feet per second (fps), measured at the center of the accelerometer specified in figure 4.

(3) Decelerate the pendulum to a stop with an acceleration-time pulse described as follows:

(i) Establish 5g and 20g levels on the a-t curve.

(ii) Establish t_1 at the point where the a-t curve first crosses the 5g level, t_2 at the point where the rising a-t curve first crosses the 20g level, t_3 at the point where the decaying a-t curve last crosses the 20g level, and t_4 at the point where the decaying a-t curve first crosses the 5g level.

(iii) t_2–t_1, shall be not more than 4 milliseconds.

(iv) t_3–t_2, shall be not less than 18 and not more than 21 milliseconds.

(v) t_4–t_3, shall be not more than 5 milliseconds.

(vi) The average deceleration between t_2 and t_3 shall be not less than 20g and not more then 34g.

(4) Allow the neck to flex without contact of the head or neck with any object other than the pendulum arm.

(5) Allow a time period of at least 1 hour between successive tests of the head and neck.

[44 FR 76530, Dec. 27, 1979; 45 FR 43353, June 26, 1980, as amended at 55 FR 30468, July 26, 1990]

§ 572.18 Thorax.

(a) The thorax consists of the part of the torso shown in assembly drawing SA 103C 001 by number SA 103C 030 and conforms to each of the applicable drawings listed under this number on drawing SA 103C 002, sheets 10 and 11.

(b) When impacted by a test probe conforming to § 572.21(a) at 13 fps in accordance with paragraph (c) of this section, the peak resultant accelerations at the location of the accelerometers mounted in the chest cavity in accordance with § 572.21(c) shall be not less than 50g and not more than 70g. The acceleration-time curve for the test shall be unimodal at or above the 30g level and shall lie at or above the 30g level for an interval not less than 2.5 milliseconds and not more than 4.0 milliseconds. The lateral acceleration shall not exceed 5g.

(c) *Test procedure.* (1) With the dummy seated without back support on a surface as specified in § 572.21(h) and oriented as specified in § 572.21(h), adjust the dummy arms and legs until they are extended horizontally forward parallel to the midsagittal plane. The joints of the limbs are adjusted at any setting between 1g and 2g, which just supports the limbs' weight when the limbs are extended horizontally forward.

(2) Establish the impact point at the chest midsagittal plane so that it is 1.5 inches below the longitudinal centerline of the bolt that attaches the top of the ribcage sternum to the thoracic spine box.

(3) Adjust the dummy so that the tangent plane at the surface on the thorax immediately adjacent to the designated impact point is vertical and parallel to the face of the test probe.

(4) Place the longitudinal centerline of the test probe to coincide with the designated impact point and align the test probe so that at impact its longitudinal centerline coincides within 2 degrees with the line formed by intersection of the horizontal and midsagittal planes passing through the designated impact point.

(5) Impact the thorax with the test probe so that at the moment of impact the probe's longitudinal centerline falls within 2 degrees of a horizontal line in the dummy midsagittal plane.

(6) Guide the probe during impact so that it moves with no significant lateral, vertical or rotational movement.

(7) Allow a time period of at least 20 minutes between successive tests of the chest.

§ 572.19 Lumbar spine, abdomen and pelvis.

(a) The lumbar spine, abdomen, and pelvis consist of the part of the torso assembly shown by number SA 103C 030 on drawing SA 103C 001 and conform to each of the applicable drawings listed under this number on drawing SA 103C 002, sheets 10 and 11.

(b) When subjected to continuously applied force in accordance with paragraph (c) of this section, the lumbar spine assembly shall flex by an amount that permits the rigid thoracic spine to rotate from its initial position in accordance with Figure 18 of this subpart by 40 degrees at a force level of not less than 34 pounds and not more than 47 pounds, and straighten upon removal of the force to within 5 degrees of its initial position.

(c) *Test procedure.* (1) The dummy with lower legs removed is positioned in an upright seated position on a seat as indicated in Figure 18, ensuring that all dummy component surfaces are clean, dry and untreated unless otherwise specified.

(2) Attach the pelvis to the seating surface by a bolt C/328, modified as shown in Figure 18, and the upper legs at the knee axial rotation joints by the attachments shown in Figure 18. Tighten the mountings so that the pelvis-lumbar joining surface is horizontal and adjust the femur ball-flange screws at each hip socket joint to 50 inch pounds torque. Remove the head and

the neck and install a cylindrical aluminum adapter 2.0 inches in diameter and 2.80 inches long in place of the neck.

(3) Flex the thorax forward 50 degrees and then rearward as necessary to return to its initial position in accordance with Figure 18 unsupported by external means.

(4) Apply a forward pull force in the midsagittal plane at the top of the neck adapter, so that at 40 degrees of the lumbar spine flexion the applied force is perpendicular to the thoracic spine box. Apply the force at any torso deflection rate between 0.5 and 1.5 degrees per second up to 40 degrees of flexion but no further; continue to apply for 10 seconds the force necessary to maintain 40 degrees of flexion, and record the highest applied force at that time. Release all force as rapidly as possible and measure the return angle 3 minutes after the release.

§ 572.20 Limbs.

The limbs consist of the assemblies shown on drawing SA 103C 001 as Nos. SA 103C 041, SA 103C 042, SA 103C 051, SA 103C 052, SA 103C 061, SA 103C 062, SA 103C 071, SA 103C 072, SA 103C 081, SA 103C 082, and conform to each of the applicable drawings listed under their respective numbers of the drawing SA 103C 002, sheets 12 through 21.

§ 572.21 Test conditions and instrumentation.

(a)(1) The test probe used for head and thoracic impact tests is a cylinder 3 inches in diameter, 13.8 inches long, and weighing 10 lbs., 6 ozs. Its impacting end has a flat right face that is rigid and that has an edge radius of 0.5 inches.

(2) The head and thorax assembly may be instrumented with a Type A or Type C accelerometer.

(i) Type A accelerometer is defined in drawing SA–572 S1.

(ii) Type C accelerometer is defined in drawing SA–572 S2.

(b) *Head accelerometers.* Install one of the triaxial accelerometers specified in § 572.21(a)(2) on a mounting block located on the horizontal transverse bulkhead as shown in the drawings subreferenced under assembly SA 103C 010 so that the seismic mass centers of each sensing element are positioned as specified in this paragraph, relative to the head accelerometer reference point located at the intersection of a line connecting the longitudinal centerlines of the transfer pins in the side of the dummy head with the midsagittal plane of the dummy head.

(1) The sensing elements of the Type C triaxial accelerometer are aligned as follows:

(i) Align one sensitive axis parallel to the vertical bulkhead and coincident with the midsagittal plane, with the seismic mass center located 0.2 inches dorsal to, and 0.1 inches inferior to the head accelerometer reference point.

(ii) Align the second sensitive axis with the horizontal plane, perpendicular to the midsagittal plane, with the seismic mass center located 0.1 inches inferior, 0.4 inches to the right of, and 0.9 inches dorsal to the head accelerometer reference point.

(iii) Align the third sensitive axis so that it is parallel to the midsagittal and horizontal planes, with the seismic mass center located 0.1 inches inferior to, 0.6 inches dorsal to, and 0.4 inches to the right of the head accelerometer reference point.

(iv) All seismic mass centers are positioned with ±0.05 inches of the specified locations.

(2) The sensing elements of the Type A triaxial accelerometer are aligned as follows:

(i) Align one sensitive axis parallel to the vertical bulkhead and coincident with midsagittal planes, with the seismic mass center located from 0.2 to 0.47 inches dorsal to, from 0.01 inches inferior to 0.21 inches superior, and from 0.0 to 0.17 inches left of the head accelerometer reference point.

(ii) Align the second sensitive axis with the horizontal plane, perpendicular to the midsagittal plane, with the seismic mass center located 0.1 to 0.13 inches inferior to, 0.17 to 0.4 inches to the right of, and 0.47 to 0.9 inches dorsal of the head accelerometer reference point.

(iii) Align the third sensitive axis so that it is parallel to the midsagittal and horizontal planes, with the seismic mass center located 0.1 to 0.13 inches inferior to, 0.6 to 0.81 inches dorsal to, and from 0.17 inches left to 0.4 inches

right of the head accelerometer reference point.

(c) *Thorax accelerometers.* Install one of the triaxial accelerometers specified in § 572.21(a)(2) on a mounting plate attached to the vertical transverse bulkhead shown in the drawing subreferenced under assembly No. SA 103C 030 in drawing SA 103C 001, so that the seismic mass centers of each sensing element are positioned as specified in this paragraph, relative to the thorax accelerometer reference point located in the midsagital plane 3 inches above the top surface of the lumbar spine, and 0.3 inches dorsal to the accelerometer mounting plate surface.

(1) The sensing elements of the Type C triaxial accelerometer are aligned as follows:

(i) Align one sensitive axis parallel to the vertical bulkhead and midsagittal planes, with the seismic mass center located 0.2 inches to the left of, 0.1 inches inferior to, and 0.2 inches ventral to the thorax accelerometer reference point.

(ii) Align the second sensitive axis so that it is in the horizontal transverse plane, and perpendicular to the midsagittal plane, with the seismic mass center located 0.2 inches to the right of, 0.1 inches inferior to, and 0.2 inches ventral to the thorax accelerometer reference point.

(iii) Align the third sensitive axis so that it is parallel to the midsagittal and horizontal planes, with the seismic mass center located 0.2 inches superior to, 0.5 inches to the right of, and 0.1 inches ventral to the thorax accelerometer reference points.

(iv) All seismic mass centers shall be positioned within ±0.05 inches of the specified locations.

(2) The sensing elements of the Type A triaxial accelerometer are aligned as follows:

(i) Align one sensitive axis parallel to the vertical bulkhead and midsagittal planes, with the seismic mass center located from 0.2 inches left to 0.28 inches right, from 0.5 to 0.15 inches inferior to, and from 0.15 to 0.25 inches ventral of the thorax accelerometer reference point.

(ii) Align the second sensitive axis so that it is in the horizontal transverse plane and perpendicular to the midsagital plane, with the seismic mass center located from 0.06 inches left to 0.2 inches right of, from 0.1 inches inferior to 0.24 inches superior, and 0.15 to 0.25 inches ventral to the thorax accelerometer reference point.

(iii) Align the third sensitive axis so that it is parallel to the midsagital and horizontal planes, with the seismic mass center located 0.15 to 0.25 inches superior to, 0.28 to 0.5 inches to the right of, and from 0.1 inches ventral to 0.19 inches dorsal to the thorax accelerometer reference point.

(d) The outputs of accelerometers installed in the dummy, and of test apparatus specified by this part, are recorded in individual data channels that conform to the requirements of SAE Recommended Practice J211a, December 1971, with channel classes as follows:

(1) Head acceleration—Class 1000.

(2) Pendulum acceleration—Class 60.

(3) Thorax acceleration—Class 180.

(e) The mountings for accelerometers have no resonance frequency less than cut-off 3 times the cut-off frequency of the applicable channel class.

(f) Limb joints are set at the force between 1–2*g*, which just supports the limbs' weight when the limbs are extended horizontally forward. The force required to move a limb segment does not exceed 2*g* throughout the range of limb motion.

(g) Performance tests are conducted at any temperature from 66 °F to 78 °F and at any relative humidity from 10 percent to 70 percent after exposure of the dummy to these conditions for a period of not less than 4 hours.

(h) For the performance tests specified in §§ 572.16, 572.18, and 572.19, the dummy is positioned in accordance with Figures 16, 17, and 18 as follows:

(1) The dummy is placed on a flat, rigid, clean, dry, horizontal surface of teflon sheeting with a smoothness of 40 microinches and whose length and width dimensions are not less than 16 inches, so that the dummy's midsagittal plane is vertical and centered on the test surface. For head tests, the seat has a vertical back support whose top is 12.4 ±0.2 inches above the seating surface. The rear surfaces of the dummy's shoulders and buttocks are touching the back support as

shown in Figure 16. For thorax and lumbar spine tests, the seating surface is without the back support as shown in Figures 17 and 18, respectively.

(2) The shoulder yokes are adjusted so that they are at the midpoint of their anterior-posterior travel with their upper surfaces horizontal.

(3) The dummy is adjusted for head impact and lumbar flexion tests so that the rear surfaces of the shoulders and buttocks are tangent to a transverse vertical plane.

(4) The arms and legs are positioned so that their centerlines are in planes parallel to the midsagittal plane.

(i) The dummy's dimensions are specified in drawings No. SA 103C 002, sheets 22 through 26.

(j) Performance tests of the same component, segment, assembly or fully assembled dummy are separated in time by a period of not less than 20 minutes unless otherwise specified.

(k) Surfaces of the dummy components are not painted except as specified in this part or in drawings subtended by this part.

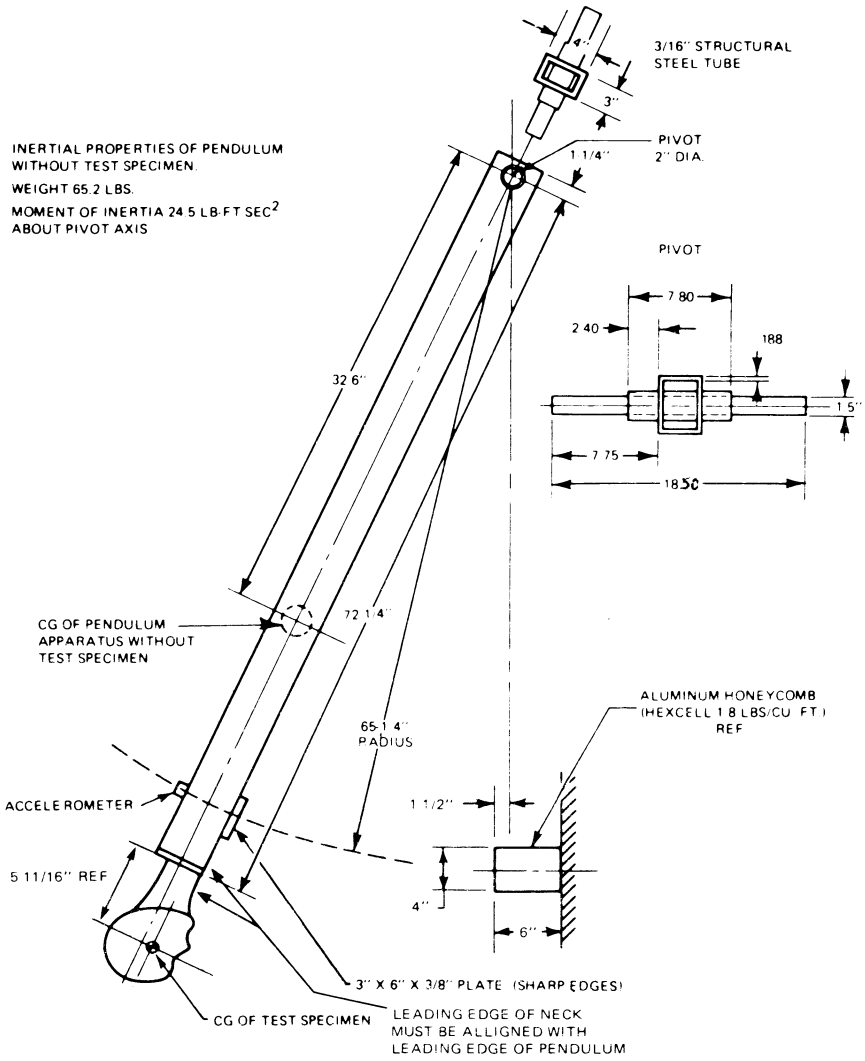

FIGURE NO. 15
NECK COMPONENT TEST

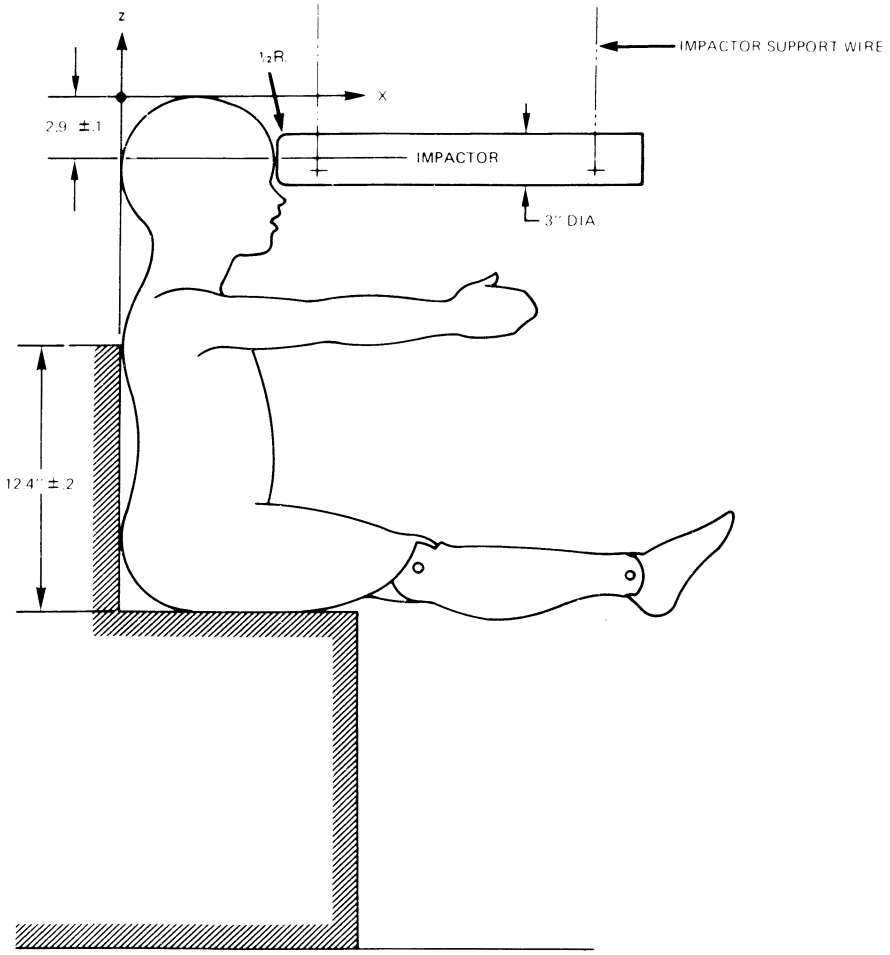

FIGURE NO. 16
HEAD IMPACT TEST

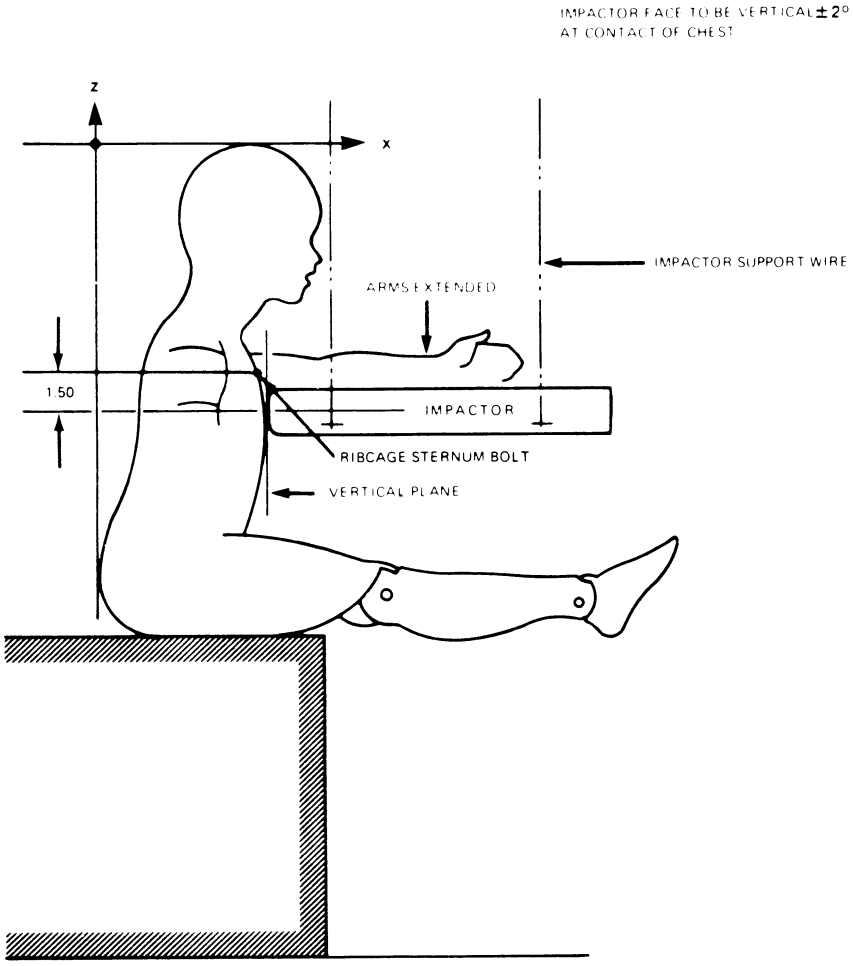

FIGURE NO. 17
CHEST IMPACT TEST

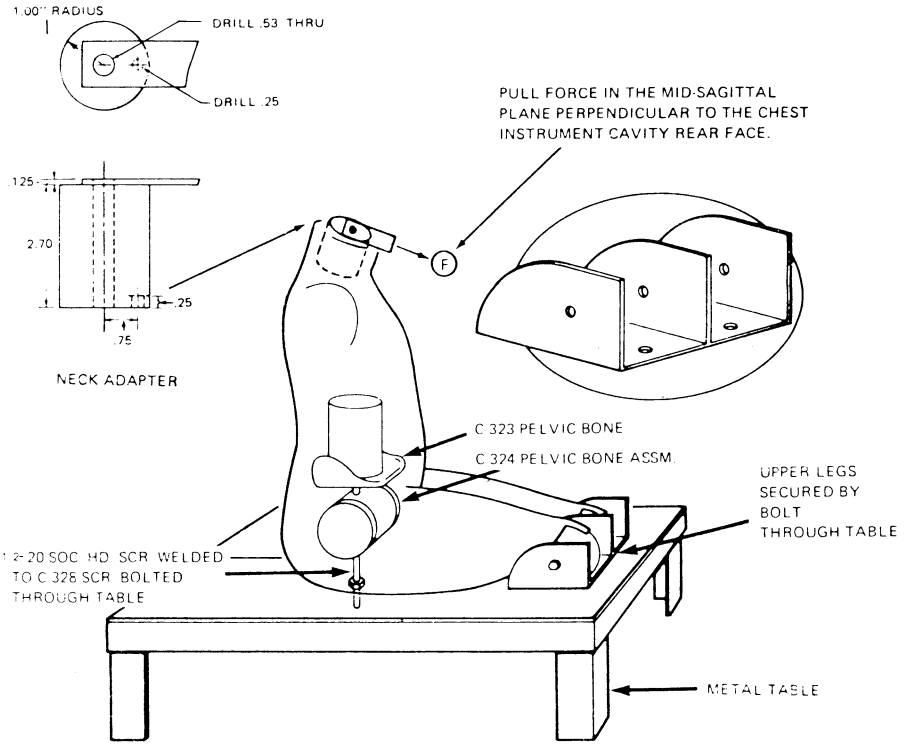

FIGURE NO. 18

LUMBAR SPINE FLEXION TEST

[44 FR 76530, Dec. 27, 1979, as amended at 45 FR 82267, Dec. 15, 1980; 55 FR 30468, July 26, 1990]

Subpart D—6-Month-Old Infant

§ 572.25 General description.

(a) The infant dummy is specified in its entirety by means of 5 drawings (No. SA 1001) and a construction manual, dated July 2, 1974, which describe in detail the materials and the procedures involved in the manufacturing of this dummy.

(b) The drawings, specifications, and construction manual referred to in this regulation that are not set forth in full are hereby incorporated in this part by reference. These materials are thereby

made part of this regulation. The Director of the Federal Register has approved the materials incorporated by reference. For materials subject to change, only the specific version approved by the Director of the Federal Register and specified in the regulation are incorporated. A notice of any change will be published in the FEDERAL REGISTER. As a convenience to the reader, the materials incorporated by reference are listed in the Finding Aid Table found at the end of this volume of the Code of Federal Regulations.

(c) The materials incorporated by reference are available for examination in Docket 78–09, Room 5109, Docket Section, National Highway Traffic Safety Administration, 400 Seventh Street SW., Washington, DC, 20590. Copies may be obtained from Rowley-Scher Reprographics, Inc., 1216 K Street NW., Washington, DC 20005 ((202) 628–6667). The materials are also on file in the reference library of the Office of the Federal Register, National Archives and Records Administration, Washington, DC.

(d) The structural properties of the dummy are such that the dummy conforms to this part in every respect both before and after being used in vehicle tests specified in Standard No. 213 of this chapter (§ 571.213).

[50 FR 25424, June 19, 1985]

Subpart E—Hybrid III Test Dummy

SOURCE: 51 FR 26701, July 25, 1986, unless otherwise noted.

§ 572.30 Incorporated materials.

(a) The drawings and specifications referred to in this regulation that are not set forth in full are hereby incorporated in this part by reference. The Director of the Federal Register has approved the materials incorporated by reference. For materials subject to change, only the specific version approved by the Director of the Federal Register and specified in the regulation are incorporated. A notice of any change will be published in the FEDERAL REGISTER. As a convenience to the reader, the materials incorporated by reference are listed in the Finding Aid Table found at the end of this volume of the Code of Federal Regulations.

(b) The materials incorporated by reference are available for examination in the general reference section of docket 74–14, Docket Section, National Highway Traffic Safety Administration, Room 5109, 400 Seventh Street, SW., Washington, DC 20590. Copies may be obtained from Reprographic Technologies, 9000 Virginia Manor Road, Beltsville, MD 20705, Telephone (301) 210–5600, Facsimile (301) 419–5069, Attn. Mr. Jay Wall. Drawings and specifications are also on file at the National Archives and Records Administration (NARA). For information on the availability of this material at NARA, call 202–741–6030, or go to: *http://www.archives.gov/federal_register/code_of_federal_regulations/ibr_locations.html.*

[51 FR 26701, July 25, 1986, as amended at 61 FR 67955, Dec. 26, 1996]

§ 572.31 General description.

(a) The Hybrid III 50th percentile size dummy consists of components and assemblies specified in the Anthropomorphic Test Dummy drawing and specifications package which consists of the following six items:

(1) The Anthropomorphic Test Dummy Parts List, dated June 26, 1998, and containing 16 pages, and a Parts List Index, dated June 26, 1998, containing 8 pages.

(2) A listing of Hybrid III Dummy Transducers-reference document AGARD-AR-330, ''Anthropomorphic Dummies for Crash and Escape System Testing'', Chapter 6, Table 6–2, North Atlantic Treaty Organization, July, 1996.

(3) A General Motors Drawing Package identified by GM Drawing No. 78051–218, revision U, titled ''Hybrid III Anthropomorphic Test Dummy,'' dated August 30, 1998, the following component assemblies, and subordinate drawings:

Drawing No.	Revision
78051–61X head assembly-complete, (May 20, 1978)	(T)
78051–90 neck assembly-complete, dated May 20, 1978	(A)

Drawing No.	Revision
78051–89 upper torso assembly-complete, dated May 20, 1978	(K)
78051–70 lower torso assembly-complete, dated June 30, 1998, except for drawing No. 78051–55, ''Instrumentation Assembly-Pelvic Accelerometer,'' dated August 2, 1979	(F)
86–5001–001 leg assembly-complete (LH), dated March 26, 1996	(A)
86–5001–002 leg assembly-complete (RH), dated March 26, 1996	(A)
78051–123 arm assembly-complete (LH), dated May 20, 1996	(D)
78051–124 arm assembly-complete (RH), dated May 20, 1978	(D)
78051–59 pelvic assembly-complete, dated June 30, 1998	(G)
78051–60 pelvic structure-molded, dated June 30, 1998	(E)

(4) Disassembly, Inspection, Assembly and Limbs Adjustment Procedures for the Hybrid III dummy, dated June 1998.

(5) Sign Convention for signal outputs—reference document SAE J1733 Information Report, titled ''Sign Convention for Vehicle Crash Testing'', dated 1994–12.

(6) Exterior dimensions of the Hybrid III dummy, dated July 15, 1986.

(b) [Reserved]

(c) Adjacent segments are joined in a manner such that throughout the range of motion and also under crash-impact conditions, there is no contact between metallic elements except for contacts that exist under static conditions.

(d) The weights, inertial properties and centers of gravity location of component assemblies shall conform to those listed in drawing 78051–338, revision S, titled ''Segment Weights, Inertial Properties, Center of Gravity Location—Hybrid III,'' dated May 20, 1978 of drawing No. 78051–218.

(e) The structural properties of the dummy are such that the dummy conforms to this part in every respect both before and after being used in vehicle test specified in Standard No. 208 of this chapter (§ 571.208).

[51 FR 26701, July 25, 1986, as amended at 53 FR 8764, Mar. 17, 1988; 57 FR 47010, Oct. 14, 1992; 61 FR 67955, Dec. 26, 1996; 62 FR 27514, May 20, 1997; 63 FR 5747, Feb. 4, 1998; 63 FR 53851, Oct. 7, 1998]

§ 572.32 Head.

(a) The head consists of the assembly shown in drawing 78051–61X, revision C, and conforms to each of the drawings subtended therein.

(b) When the head (Drawing number 78051–61X, titled ''head assembly—complete,'' dated March 28, 1997 (Revision C) with six axis neck transducer structural replacement (Drawing number 78051–383X, Revision P, titled ''Neck Transducer Structural Replacement,'' dated November 1, 1995) is dropped from a height of 14.8 inches in accordance with paragraph (c) of this section, the peak resultant accelerations at the location of the accelerometers mounted in the head in accordance with § 572.36(c) shall not be less than 225g, and not more than 275g. The acceleration/time curve for the test shall be unimodal to the extent that oscillations occurring after the main acceleration pulse are less than ten percent (zero to peak) of the main pulse. The lateral acceleration vector shall not exceed 15g (zero to peak).

(c) *Test procedure.* (1) Soak the head assembly in a test environment at any temperature between 66 degrees F to 78 degrees F and at a relative humidity from 10% to 70% for a period of at least four hours prior to its application in a test.

(2) Clean the head's skin surface and the surface of the impact plate with 1,1,1 Trichlorethane or equivalent.

(3) Suspend the head, as shown in Figure 19, so that the lowest point on the forehead is 0.5 inches below the lowest point on the dummy's nose when the midsagittal plane is vertical.

FIGURE 19

TEST SET-UP SPECIFICATIONS

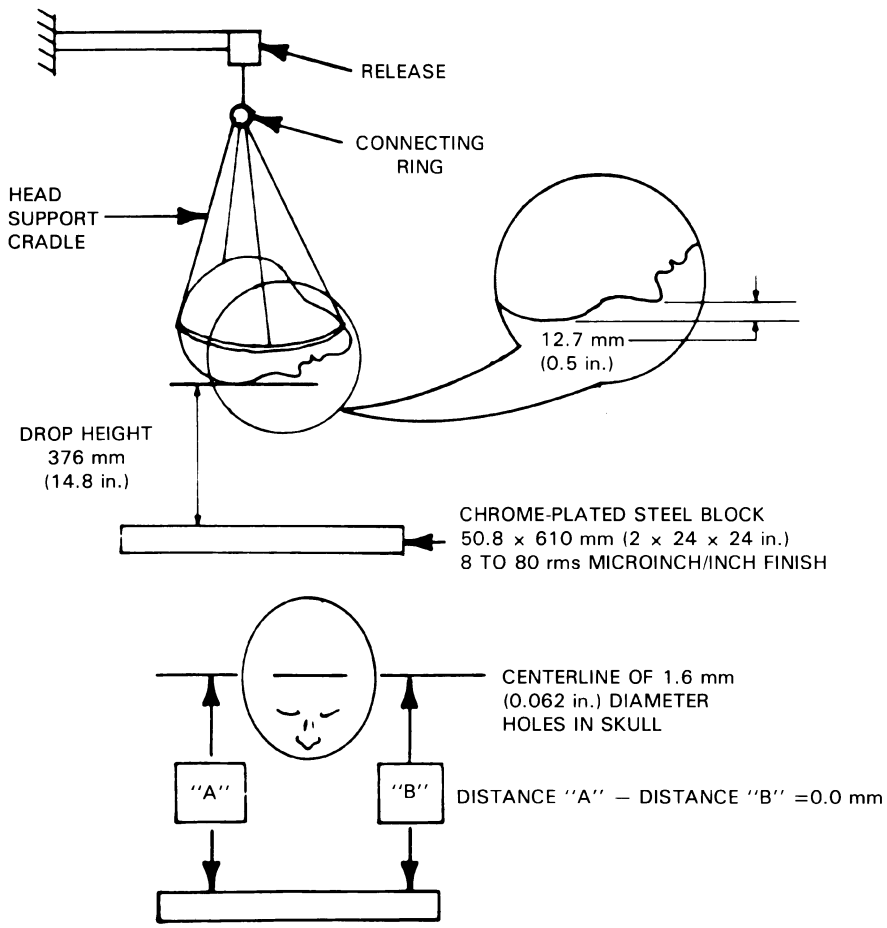

NOTE: TOLERANCE ON TEST SETUP DIMENSIONS ±1 mm (0.04 in.)

(4) Drop the head from the specified height by means that ensure instant release into a rigidly supported flat horizontal steel plate, which is 2 inches thick and 2 feet square. The plate shall have a clean, dry surface and any microfinish of not less than 8 microinches (rms) and not more than 80 microinches (rms).

(5) Allow at least 3 hours between successive tests on the same head.

[51 FR 26701, July 25, 1986, as amended at 62 FR 27514, May 20, 1997]

§ 572.33 Neck.

(a) The neck consists of the assembly shown in drawing 78051–90, revision A and conforms to each of the drawings subtended therein.

(b) When the head and neck assembly (consisting of the parts 78051–61X, revision C; –90, revision A; –84; –94; –98; –104, revision F; –303, revision E; –305; –306; –307, revision X) which has a six axis neck transducer (Drawing number C–1709, Revision D, titled ''Neck transducer,'' dated February 1, 1993.) installed in conformance with § 572.36(d), is tested in accordance with paragraph (c) of this section, it shall have the following characteristics:

(1) *Flexion*. (i) Plane D, referenced in Figure 20, shall rotate between 64 degrees and 78 degrees, which shall occur between 57 milliseconds (ms) and 64 ms from time zero. In first rebound, the rotation of Plane D shall cross 0 degrees between 113 ms and 128 ms.

(ii) The moment measured by the six axis neck transducer (drawing C–1709, revision D) about the occipital condyles, referenced in Figure 20, shall be calculated by the following formula: Moment (lbs-ft) = My − 0.058 × Fx, where My is the moment measured in lbs-ft by the ''Y'' axis moment sensor of the six axis neck transducer and Fx is the force measured in lbs by the ''X'' axis force sensor (Channel Class 600) of the six axis neck transducer. The moment shall have a maximum value between 65 lbs-ft and 80 lbs-ft occurring between 47ms and 58 ms, and the positive moment shall decay for the first time to 0 lb-ft between 97 ms and 107 ms.

(2) *Extension*. (i) Plane D, referenced in Figure 21, shall rotate between 81 degrees and 106 degrees, which shall occur between 72 ms and 82 ms from time zero. In first rebound, rotation of Plane D shall cross 0 degrees between 147 ms and 174 ms.

(ii) The moment measured by the six axis neck transducer (drawing C–1709, revision D) about the occipital condyles, referenced in Figure 21, shall be calculated by the following formula: Moment (lbs-ft) = My − 0.058 × Fx, where My is the moment measured in lbs-ft by the ''Y'' axis moment sensor of the six axis neck transducer and Fx is the force measured in lbs by the ''X'' axis force sensor (Channel Class 600) of the six axis neck transducer. The moment shall have a maximum value between—39 lbs-ft and –59 lbs-ft, occurring between 65 ms and 79 ms, and the negative moment shall decay for the first time to 0 lb-ft between 120 ms and 148 ms.

FIGURE 20

FLEXION - TEST SET-UP SPECIFICATIONS

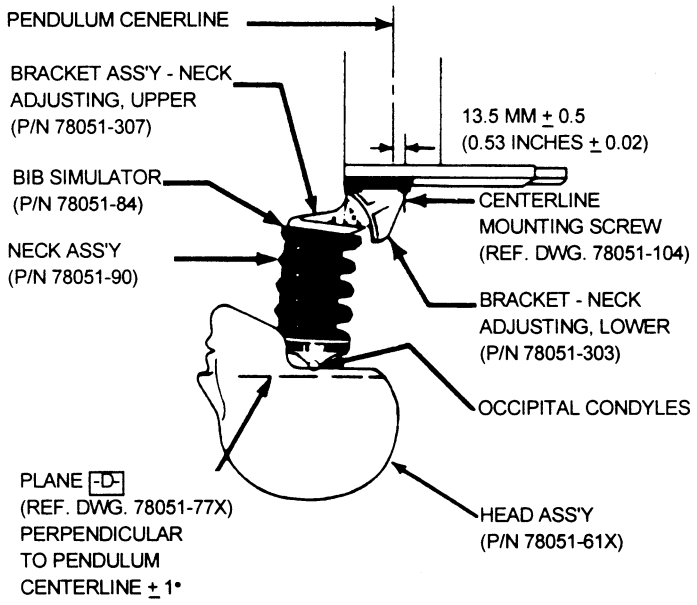

NOTE: PENDULUM SHOWN AT TIME ZERO POSITION

FIGURE 21

EXTENSION - TEST SET-UP SPECIFICATIONS

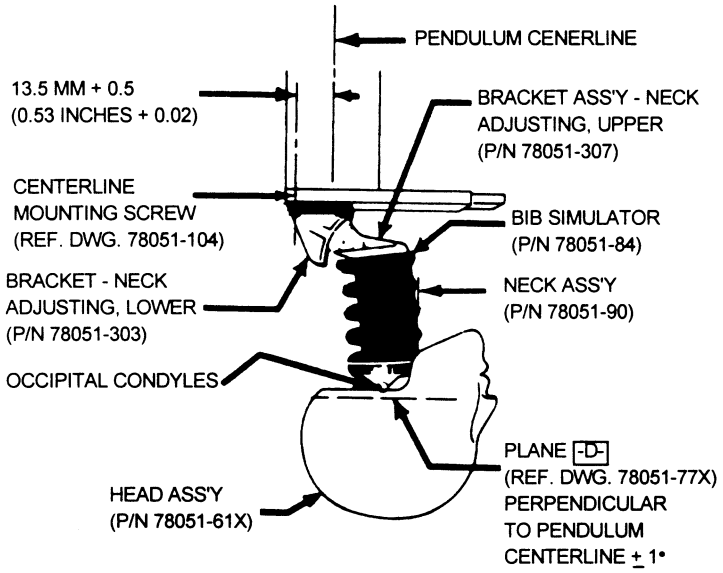

NOTE: PENDULUM SHOWN AT TIME ZERO POSITION

(c) *Test procedure.* (1) Soak the test material in a test environment at any temperature between 69 degrees F to 72 degrees F and at a relative humidity from 10% to 70% for a period of at least four hours prior to its application in a test.

(2) Torque the jamnut (78051–64) on the neck cable (78051–301, revision E) to 1.0 lbs-ft ±.2 lbs-ft.

(3) Mount the head-neck assembly, defined in paragraph (b) of this section, on a rigid pendulum as shown in Figure 22 so that the head's midsagittal plane is vertical and coincides with the plane of motion of the pendulum's longitudinal axis.

FIGURE 22

PENDULUM SPECIFICATIONS

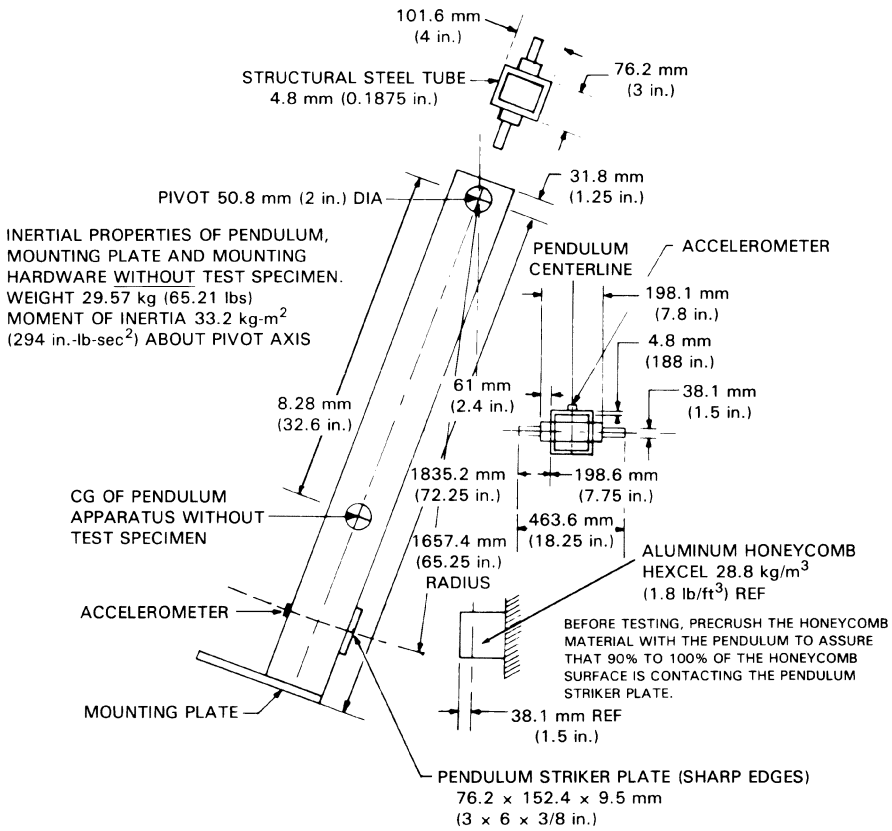

(4) Release the pendulum and allow it to fall freely from a height such that the tangential velocity at the pendulum accelerometer centerline at the instance of contact with the honeycomb is 23.0 ft/sec ±0.4 ft/sec. for flexion testing and 19.9 ft/sec. ±0.4 ft/sec. for extension testing. The pendulum deceleration vs. time pulse for flexion testing shall conform to the characteristics shown in Table A and the decaying deceleration-time curve shall first cross 5_g between 34 ms and 42 ms. The pendulum deceleration vs. time pulse for extension testing shall conform to the characteristics shown in Table B and the decaying deceleration-time curve shall cross 5g between 38 ms and 46 ms.

TABLE A—FLEXION PENDULUM DECELERATION VS. TIME PULSE

Time (ms)	Flexion deceleration level (g)
10	22.50–27.50
20	17.60–22.60
30	12.50–18.50
Any other time above 30 ms	29 maximum.

TABLE B—EXTENSION PENDULUM DECELERATION VS. TIME PULSE

Time (ms)	Extension deceleration level (g)
10	17.20–21.20
20	14.00–19.00
30	11.00–16.00
Any other time above 30 ms	22 maximum.

(5) Allow the neck to flex without impact of the head or neck with any object during the test.

[51 FR 26701, July 25, 1986, as amended at 53 FR 8765, Mar. 17, 1988; 62 FR 27514, May 20, 1997]

§ 572.34 Thorax.

(a) The thorax consists of the upper torso assembly in drawing 78051–89, revision K and shall conform to each of the drawings subtended therein.

(b) When impacted by a test probe conforming to § 572.36(a) at 22 fps ±0.40 fps in accordance with paragraph (c) of this section, the thorax of a complete dummy assembly (78051–218, revision U, without shoes, shall resist with a force of 1242.5 pounds ±82.5 pounds measured by the test probe and shall have a sternum displacement measured relative to spine of 2.68 inches ±0.18 inches. The internal hysteresis in each impact shall be more than 69% but less than 85%. The force measured is the product of pendulum mass and deceleration.

(c) *Test procedure.* (1) Soak the test dummy in an environment with a relative humidity from 10% to 70% until the temperature of the ribs of the test dummy have stabilized at a temperature between 69 degrees F and 72 degrees F.

(2) Seat the dummy without back and arm supports on a surface as shown in Figure 23, and set the angle of the pelvic bone at 13 degrees plus or minus 2 degrees, using the procedure described in S11.4.3.2 of Standard No. 208 (§ 571.208 of this chapter).

FIGURE 23

TEST SET-UP SPECIFICATIONS

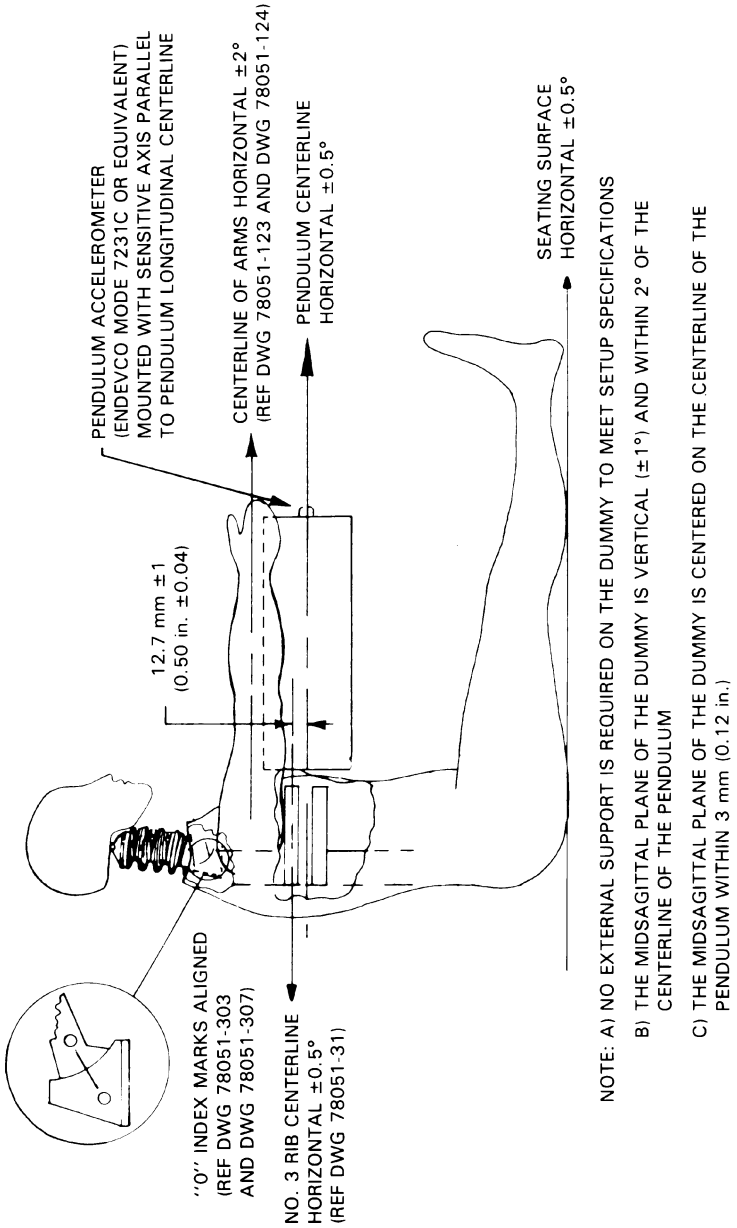

(3) Place the longitudinal centerline of the test probe so that it is .5 ±.04 in. below the horizontal centerline of the No. 3 Rib (reference drawing number 79051–64, revision A-M) as shown in Figure 23.

(4) Align the test probe specified in § 572.36(a) so that at impact its longitudinal centerline coincides within .5 degree of a horizontal line in the dummy's midsagittal plane.

(5) Impact the thorax with the test probe so that the longitudinal centerline of the test probe falls within 2 degrees of a horizontal line in the dummy midsagittal plane at the moment of impact.

(6) Guide the probe during impact so that it moves with no significant lateral, vertical, or rotational movement.

(7) Measure the horizontal deflection of the sternum relative to the thoracic spine along the line established by the longitudinal centerline of the probe at the moment of impact, using a potentiometer (ref. drawing 78051–317, revision A) mounted inside the sternum as shown in drawing 78051–89, revision I.

(8) Measure hysteresis by determining the ratio of the area between the loading and unloading portions of the force deflection curve to the area under the loading portion of the curve.

[51 FR 26701, July 25, 1986, as amended at 53 FR 8765, Mar. 17, 1988; 62 FR 27518, May 20, 1997; 63 FR 53851, Oct. 7, 1998]

§ 572.35 Limbs.

(a) The limbs consist of the following assemblies: leg assemblies 86–5001–001, revision A and –002, revision A, and arm assemblies 78051–123, revision D and –124, revision D, and shall conform to the drawings subtended therein.

(b) *Femur impact response.* (1) When each knee of the leg assemblies is impacted in accordance with paragraph (b)(2) of this section, at 6.9 ft/sec ±0.10 ft/sec by the pendulum defined in § 572.36(b), the peak knee impact force, which is a product of pendulum mass and acceleration, shall have a minimum value of not less than 1060 pounds and a maximum value of not more than 1300 pounds.

(2) *Test procedure.* (i) The test material consists of leg assemblies (86–5001–001, revision A) left and (–002, revision A) right with upper leg assemblies (78051–46) left and (78051–47) right removed. The load cell simulator (78051–319, revision A) is used to secure the knee cap assemblies (79051–16, revision B) as shown in Figure 24.

(ii) Soak the test material in a test environment at any temperature between 66 degrees F to 78 degrees F and at a relative humidity from 10% to 70% for a period of at least four hours prior to its application in a test.

(iii) Mount the test material with the leg assembly secured through the load cell simulator to a rigid surface as shown in Figure 24. No contact is permitted between the foot and any other exterior surfaces.

(iv) Place the longitudinal centerline of the test probe so that at contact with the knee it is collinear within 2 degrees with the longitudinal centerline of the femur load cell simulator.

(v) Guide the pendulum so that there is no significant lateral, vertical or rotational movement at time zero.

(vi) Impact the knee with the test probe so that the longitudinal centerline of the test probe at the instant of impact falls within .5 degrees of a horizontal line parallel to the femur load cell simulator at time zero.

(vii) Time zero is defined as the time of contact between the test probe and the knee.

(c) *Hip joint-femur flexion.* (1) When each femur is rotated in the flexion direction in accordance with paragraph (c)(2) of this section, the femur torque at 30 deg. rotation from its initial horizontal orientation will not be more than 70 ft-lbf, and at 150 ft-lbf of torque will not be less than 40 deg. or more than 50 deg.

(2) Test procedure. (i) The test material consists of the assembled dummy, part No. 78051–218 (revision S) except that (1) leg assemblies (86–5001–001 and 002) are separated from the dummy by removing the 3/8–16 Socket Head Cap Screw (SHCS) (78051–99) but retaining the structural assembly of the upper legs (78051–43 and –44), (2) the abdominal insert (78051–52) is removed and (3) the instrument cover plate (78051–13) in the pelvic bone is replaced by a rigid pelvic bone stabilizer insert (Figure 25a) and firmly secured.

(ii) Seat the dummy on a rigid seat fixture (Figure 25) and firmly secure it to the seat back by bolting the stabilizer insert and the rigid support device (Figure 25b) to the seat back of the test fixture (Figures 26 and 27) while

maintaining the pelvis (78051–58) ''B'' plane horizontal.

(iii) Insert a lever arm into the femur shaft opening of the upper leg structure assembly (78051–43/44) and firmly secure it using the 3/8–16 socket head cap screws.

(iv) Lift the lever arm parallel to the midsagittal plane at a rotation rate of 5 to 10 deg. per second while maintaining the 1/2 in. shoulder bolt longitudinal centerline horizontal throughout the range of motion until the 150 ft-lbf torque level is reached. Record the torque and angle of rotation of the femur.

(v) Operating environment and temperature are the same as specified in paragraph (b)(2)(ii) of this section.

FIGURE 24

TEST SET-UP SPECIFICATIONS

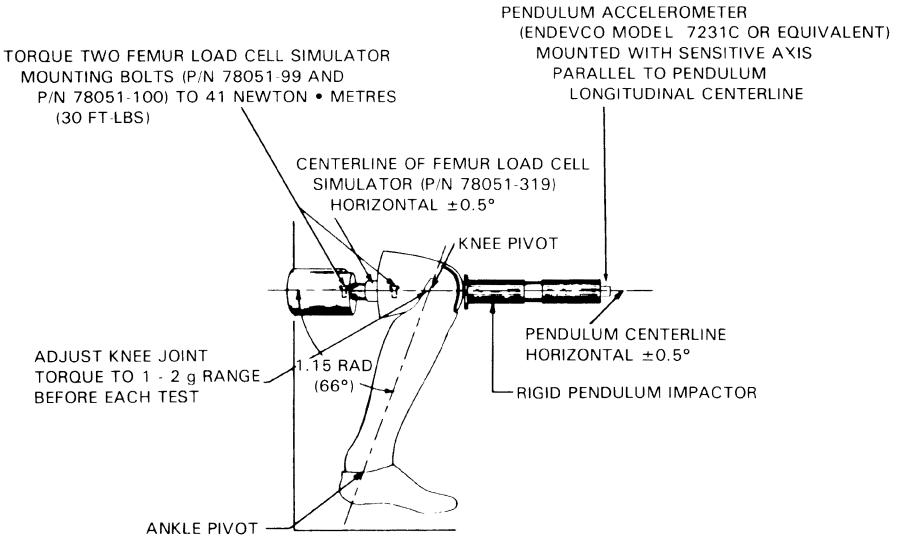

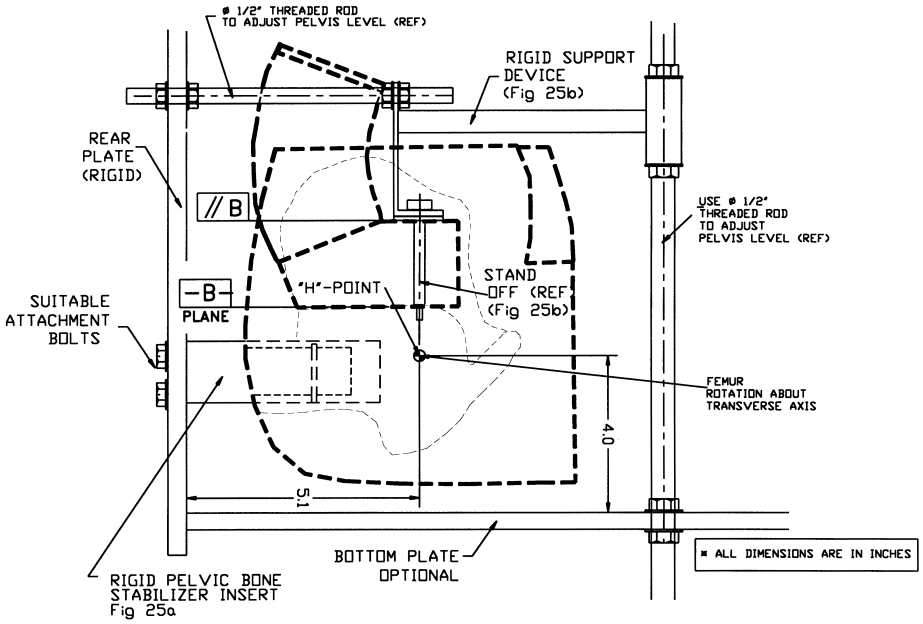

HIP-JOINT TEST FIXTURE ASSEMBLY (REF)
Fig 25

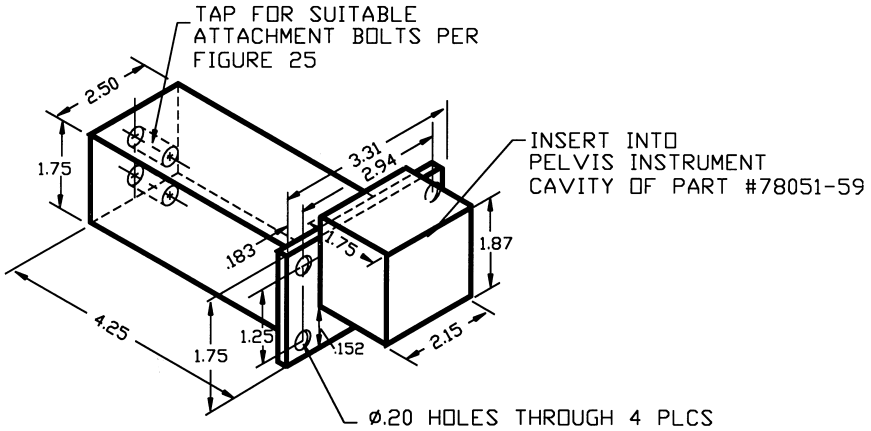

(REF NOTE): HOLE LOCATIONS MATCHING
INSTRUMENT CAVITY COVER #78051-13

* ALL DIMENSIONS ARE IN INCHES

MATERIAL: Alum. or Steel

PELVIC BONE STABILIZER INSERT (REF)

Fig 25a

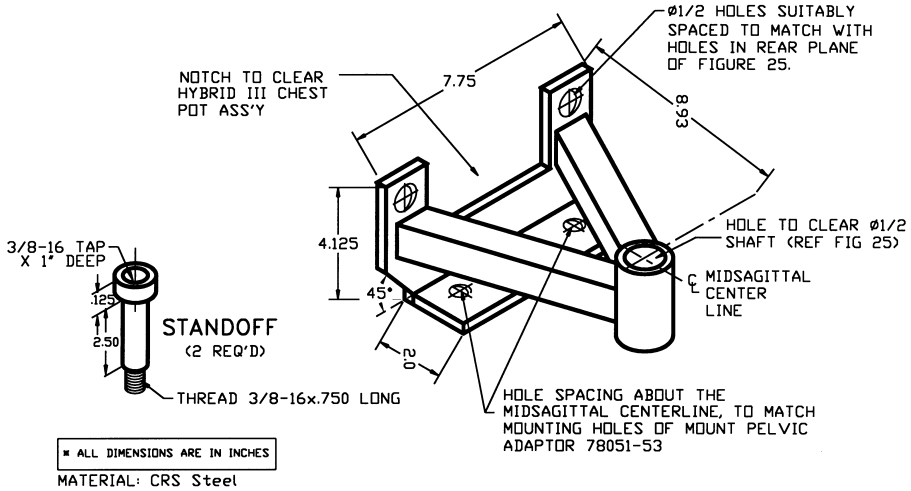

* ALL DIMENSIONS ARE IN INCHES

MATERIAL: CRS Steel

PELVIS UPPER SUPPORT DEVICE (REF)

Fig 25b

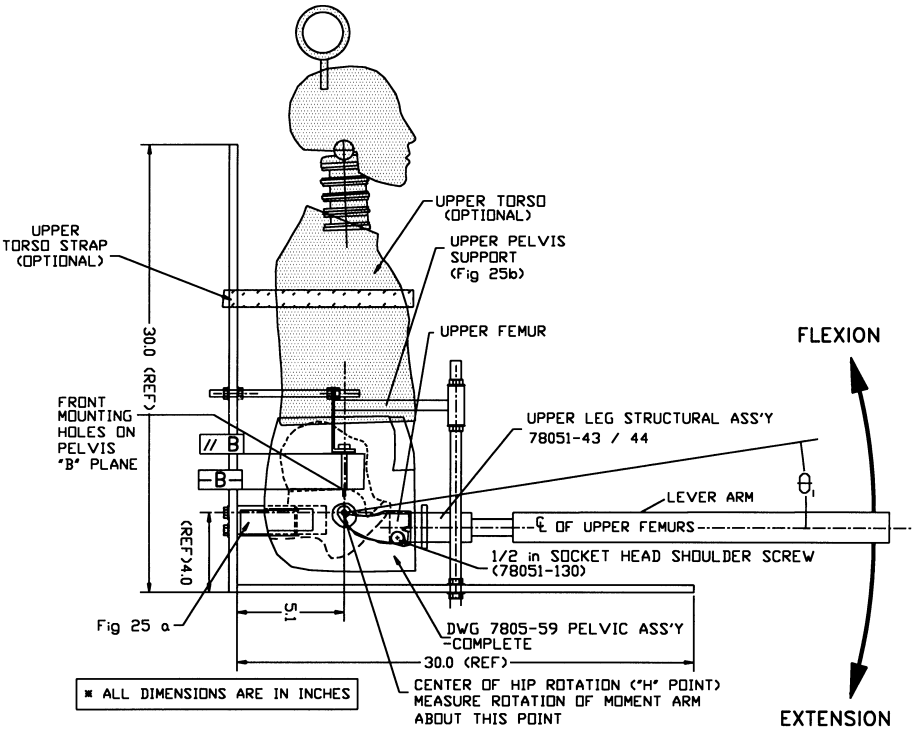

HIP JOINT TEST FIXTURE AND TORSO ASSEMBLY (REF)
SIDE VIEW

Fig 26

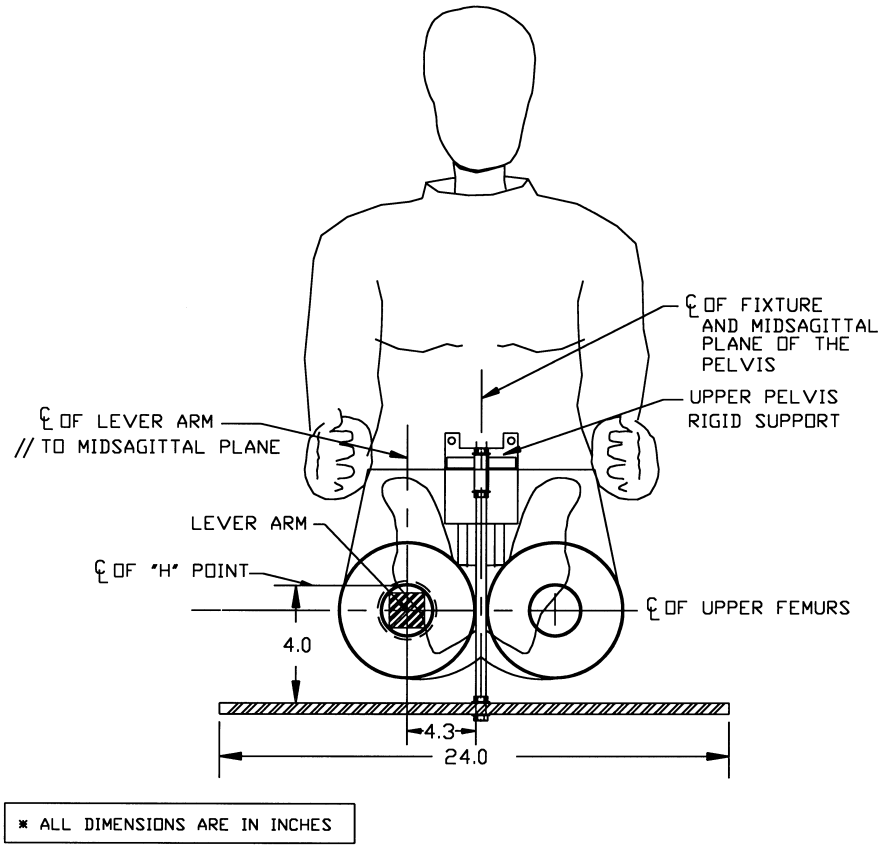

HIP JOINT TEST FIXTURE AND TORSO ASSEMBLY (REF)
FRONT VIEW

Fig 27

[51 FR 26701, July 25, 1986, as amended at 53 FR 8765, Mar. 17, 1988; 61 FR 67955, Dec. 26, 1997; 63 FR 5748, Feb. 4, 1998]

§ 572.36 Test conditions and instrumentation.

(a) The test probe used for thoracic impact tests is a 6 inch diameter cylinder that weighs 51.5 pounds including instrumentation. Its impacting end has a flat right angle face that is rigid and has an edge radius of 0.5 inches. The test probe has an accelerometer mounted on the end opposite from impact with its sensitive axis colinear to the longitudinal centerline of the cylinder.

(b) Test probe used for the knee impact tests is a 3 inch diameter cylinder that weights 11 pounds including instrumentation. Its impacting end has a flat right angle face that is rigid and has an edge radius of 0.02 inches. The test probe has an accelerometer mounted on the end opposite from impact with its sensitive axis colinear to

the longitudinal centerline of the cylinder.

(c) Head accelerometers shall have dimensions and response characteristics specified in drawing 78051–136, revision A, or its equivalent, and the location of their seismic mass as mounted in the skull are shown in drawing C–1709, revision D.

(d) The six axis neck transducer shall have the dimensions, response characteristics, and sensitive axis locations specified in drawing C–1709, revision D and be mounted for testing as shown in Figures 20 and 21 of § 572.33, and in the assembly drawing 78051–218, revision T.

(e) The chest accelerometers shall have the dimensions, response characteristics, and sensitive mass locations specified in drawing 78051–136, revision A or its equivalent and be mounted as shown with adaptor assembly 78051–116, revision D for assembly into 78051–218, revision T.

(f) The chest deflection transducer shall have the dimensions and response characteristics specified in drawing 78051–342, revision A or its equivalent and be mounted in the chest deflection transducer assembly 78051–317, revision A for assembly into 78051–218, revision T.

(g) The thorax and knee impactor accelerometers shall have the dimensions and characteristics of Endevco Model 7231c or equivalent. Each accelerometer shall be mounted with its sensitive axis colinear with the pendulum's longitudinal centerline.

(h) The femur load cell shall have the dimensions, response characteristics, and sensitive axis locations specified in drawing 78051–265 or its equivalent and be mounted in assemblies 78051–46 and –47 for assembly into 78051–218, revision T.

(i) The outputs of acceleration and force-sensing devices installed in the dummy and in the test apparatus specified by this part are recorded in individual data channels that conform to requirements of Society of Automotive Engineers (SAE) Recommended Practice J211 Mar95, Instrumentation for Impact Tests, Parts 1 and 2. SAE J211 Mar95 sets forth the following channel classes:

(1) Head acceleration—Class 1000

(2) Neck forces—Class 1000

(3) Neck moments—Class 600

(4) Neck pendulum acceleration—Class 60

(5) Thorax and thorax pendulum acceleration—Class 180

(6) Thorax deflection—Class 180

(7) Knee pendulum acceleration—Class 600

(8) Femur force—Class 600

(j) Coordinate signs for instrumentation polarity conform to the sign convention shown in the document incorporated by § 572.31(a)(5).

(k) The mountings for sensing devices shall have no resonance frequency within range of 3 times the frequency range of the applicable channel class.

(l) Limb joints are set at lg, barely restraining the weight of the limb when it is extended horizontally. The force required to move a limb segment shall not exceed 2g throughout the range of limb motion.

(m) Performance tests of the same component, segment, assembly, or fully assembled dummy are separated in time by period of not less than 30 minutes unless otherwise noted.

(n) Surfaces of dummy components are not painted except as specified in this part or in drawings subtended by this part.

[51 FR 26701, July 25, 1986, as amended at 53 FR 8765, Mar. 17, 1988; 62 FR 27518, May 20, 1997; 63 FR 45965, Aug. 28, 1998]

Subpart F—Side Impact Dummy 50th Percentile Male

SOURCE: 55 FR 45766, Oct. 30, 1990, unless otherwise noted.

§ 572.40 Incorporated materials.

(a) The drawings, specifications, manual, and computer program referred to in this regulation that are not set forth in full are hereby incorporated in this part by reference. These materials are thereby made part of this regulation. The Director of the Federal Register has approved the materials incorporated by reference. For materials subject to change, only the specific version approved by the Director of the Federal Register and specified in the regulation are incorporated. A notice of any change will be published in the FEDERAL REGISTER. As a convenience

to the reader, the materials incorporated by reference are listed in the Finding Aids Table found at the end of this volume of the Code of Federal Regulations.

(b) The materials incorporated in this part by reference are available for examination in the general reference section of Docket 79–04, Docket Section, National Highway Traffic Safety Administration, room 5109, 400 Seventh St., S.W., Washington, D.C., 20590, telephone (202) 366–4949. Copies may be obtained from Reprographic Technologies, 9000 Virginia Manor Rd., Suite 210, Beltsville, MD, 20705, Telephone (301) 419–5070, Fax (301) 419–5069.

[55 FR 45766, Oct. 30, 1990, as amended at 63 FR 16140, Apr. 2, 1998]

§ 572.41 General description.

(a) The dummy consists of component parts and component assemblies (SA-SID-M001, revision C, dated September 12, 1996, and SA-SID-M001A, revision B, dated September 12, 1996), which are described in approximately 250 drawings and specifications that are set forth in § 572.5(a) of this chapter with the following changes and additions which are described in approximately 85 drawings and specifications (incorporated by reference; see § 572.40):

(1) The head assembly consists of the assembly specified in subpart B (§ 572.6(a)) and conforms to each of the drawings subtended under drawing SA 150 M010 and drawings specified in SA-SID-M010, dated August 13, 1987.

(2) The neck assembly consists of the assembly specified in subpart B (§ 572.7(a)) and conforms to each of the drawings subtended under drawing SA 150 M020 and drawings shown in SA-SID-M010, dated August 13, 1987.

(3) The thorax assembly consists of the assembly shown as number SID–053 and conforms to each applicable drawing subtended by number SA-SID-M030 revision A, dated May 18, 1994.

(4) The lumbar spine consists of the assembly specified in subpart B (§ 572.9(a)) and conforms to drawing SA 150 M050 and drawings subtended by SA-SID-M050 revision B, dated September 12, 1996, including the addition of Lumbar Spacers-Lower SID-SM-001 and Lumbar Spacers-Upper SID-SM-002 (both dated May 12, 1994), and Washer 78051–243.

(5) The abdomen and pelvis consist of the assembly specified in subpart B of this part (§ 572.9) and conform to the drawings subtended by SA 150 M060, the drawings subtended by SA-SID-M060 revision A, dated May 18, 1994, and the drawings subtended by SA-SID-087 sheet 1 revision H, dated May 18, 1994, and SA-SID-087 sheet 2 revision H.

(6) The lower limbs consist of the assemblies specified in subpart B (§ 572.10) shown as SA 150 M080 and SA 150 M081 in Figure 1 and SA-SID-M080 and SA-SID-M081, both dated August 13, 1987, and conform to the drawings subtended by those numbers.

(b) The structural properties of the dummy are such that the dummy conforms to the requirements of this subpart in every respect both before and after being used in vehicle tests specified in Standard No 214 § 571.214 of this chapter.

(c) Disassembly, inspection, and assembly procedures; external dimensions and weight; and a dummy drawing list are set forth in the Side Impact Dummy (SID) User's Manual, dated May 1994 except for pages 7, 20 and 23, and appendix A (consisting of replacement pages 7, 20 and 23) dated January 20, 1998 (incorporated by reference; see § 572.40).

[55 FR 45766, Oct. 30, 1990, as amended at 59 FR 52091, Oct. 14, 1994; 63 FR 16140, Apr. 2, 1998]

§ 572.42 Thorax.

(a) When the thorax of a completely assembled dummy (SA-SID-M001A revision A, dated May 18, 1994, incorporated by reference; see § 572.40), appropriately assembled for right or left side impact, is impacted by a test probe conforming to § 572.44(a) at 14 fps in accordance with paragraph (b) of this section, the peak accelerations at the location of the accelerometers mounted on the thorax in accordance with § 572.44(b) shall be:

(1) For the accelerometer at the top of the Rib Bar on the struck side (LUR or RUR) not less than 37 g's and not more than 46 g's.

(2) For the accelerometer at the bottom of the Rib Bar on the struck side

(LLR or RLR) not less than 37 g's and not more than 46 g's.

(3) For the lower thoracic spine (T12) not less than 15 g's and not more than 22 g's.

(b) Test Procedure. (1) Adjust the dummy legs as specified in § 572.44(f). Seat the dummy on a seating surface as specified in § 572.44(h) with the limbs extended horizontally forward.

(2) Place the longitudinal centerline of the test probe at the lateral side of the chest at the intersection of the centerlines of the third rib and the Rib Bar on the desired side of impact. This is the left side if the dummy is to be used on the driver's side of the vehicle and the right side if the dummy is to be used on the passenger side of the vehicle. The probe's centerline is perpendicular to thorax's midsagittal plane.

(3) Align the test probe so that its longitudinal centerline coincides with the line formed by the intersection of the transverse and frontal planes perpendicular to the chest's midsagittal plane passing through the designated impact point.

(4) Position the dummy as specified in § 572.44(h), so that the thorax's midsagittal plane and tangential plane to the Hinge Mounting Block (Drawing SID–034) are vertical.

(5) Impact the thorax with the test probe so that at the moment of impact at the designated impact point, the probe's longitudinal centerline falls within 2 degrees of a horizontal line perpendicular to the dummy's midsagittal plane and passing through the designated impact point.

(6) Guide the probe during impact so that it moves with no significant lateral, vertical or rotational movement.

(7) Allow a time period of at least 20 minutes between successive tests of the chest.

[59 FR 52091, Oct. 14, 1994, as amended at 59 FR 52091, Oct. 14, 1994]

§ 572.43 Lumbar spine and pelvis.

(a) When the pelvis of a fully assembled dummy (SA-SID-M001A revision B, dated September 12, 1996, (incorporated by reference; see § 572.40) is impacted laterally by a test probe conforming to § 572.44(a) at 14 fps in accordance with paragraph (b) of this section, the peak acceleration at the location of the accelerometer mounted in the pelvis cavity in accordance with § 572.44(c) shall be not less than 40g and not more than 60g. The acceleration-time curve for the test shall be unimodal and shall lie at or above the +20g level for an interval not less than 3 milliseconds and not more than 7 milliseconds.

(b) Test Procedure. (1) Adjust the dummy legs as specified in § 572.44(f). Seat the dummy on a seating surface as specified in § 572.44(h) with the limbs extended horizontally forward.

(2) Place the longitudinal centerline of the test probe at the lateral side of the pelvis at a point 3.9 inches vertical from the seating surface and 4.8 inches ventral to a transverse vertical plane which is tangent to the back of the dummy's buttocks.

(3) Align the test probe so that at impact its longitudinal centerline coincides with the line formed by intersection of the horizontal and vertical planes perpendicular to the midsagittal plane passing through the designated impact point.

(4) Adjust the dummy so that its midsagittal plane is vertical and the rear surfaces of the thorax and buttocks are tangent to a transverse vertical plane.

(5) Impact the pelvis with the test probe so that at the moment of impact the probe's longitudinal centerline falls within 2 degrees of the line specified in paragraph (b)(3) of this section.

(6) Guide the test probe during impact so that it moves with no significant lateral, vertical or rotational movement.

(7) Allow a time period of at least 2 hours between successive tests of the pelvis.

[55 FR 45766, Oct. 30, 1990, as amended at 59 FR 52091, Oct. 14, 1994; 63 FR 16140, Apr. 2, 1998]

§ 572.44 Instrumentation and test conditions.

(a) The test probe used for lateral thoracic and pelvis impact tests is a 6 inch diameter cylinder that weighs 51.5 pounds including instrumentation. Its impacting end has a flat right angle face that is rigid and has an edge radius of 0.5 inches.

(b) Three accelerometers are mounted in the thorax for measurement of

lateral accelerations with each accelerometer's sensitive axis aligned to be closely perpendicular to the thorax's midsagittal plane. The accelerometers are mounted in the following locations:

(1) One accelerometer is mounted on the thorax to lumbar adaptor (SID–005 revision F, dated May 18, 1994, incorporated by reference; see § 572.40) with seismic mass center located 0.5 inches toward the impact side, 0.1 inches upward and 1.86 inches rearward from the reference point shown in Figure 30 in appendix A to subpart F of part 572. Maximum permissible variation of the seismic location must not exceed 0.2 inches spherical radius.

(2) Two accelerometers are mounted, one on the top and the other at the bottom part of the Rib Bar (SID–024) on the struck side. Their seismic mass centers are at any distance up to .4 inches from a point on the Rib Bar surface located on its longitudinal center line .75 inches from the top for the top accelerometer and .75 inches from the bottom, for the bottom accelerometer.

(c) One accelerometer is mounted in the pelvis for measurement of the lateral acceleration with its sensitive axis perpendicular to the pelvic midsagittal plane. The accelerometer is mounted on the rear wall of the instrumentation cavity of the pelvis (SID–087 revision H, dated May 18, 1994, incorporated by reference; see § 572.40). The accelerometer's seismic mass with respect to the mounting bolt center line is 0.9 inches up, 0.7 inches to the left for left side impact and 0.03 inches to the left for right side impact, and 0.5 inches rearward from the rear wall mounting surface as shown in Figure 31 in appendix A to subpart F of part 572. Maximum permissible variation of the seismic location must not exceed 0.2 inches spherical radius.

(d) Instrumentation and sensors used must conform to the SAE J–211 (1980) recommended practice requirements (incorporated by reference; see § 572.40). The outputs of the accelerometers installed in the dummy are then processed with the software for the Finite Impulse Response (FIR) filter (FIR 100 software). The FORTRAN program for this FIR 100 software (FIR100 Filter Program, Version 1.0, July 16, 1990) is incorporated by reference in this part (see § 572.40). The data are processed in the following manner:

(1) Analog data recorded in accordance with SAE J–211 (1980) recommended practice channel class 1000 specification.

(2) Filter the data with a 300 Hz, SAE Class 180 filter;

(3) Subsample the data to a 1600 Hz sampling rate;

(4) Remove the bias from the subsampled data, and

(5) Filter the data with the FIR100 Filter Program (Version 1.0, July 16, 1990), which has the following characteristics—

(i) Passband frequency, 100 Hz.

(ii) Stopband frequency, 189 Hz.

(iii) Stopband gain, −50 db.

(iv) Passband ripple, 0.0225 db.

(e) The mountings for the spine, rib and pelvis accelerometers shall have no resonance frequency within a range of 3 times the frequency range of the applicable channel class.

(f) Limb joints of the test dummy are set at the force between 1–2 g's, which just supports the limbs' weight when the limbs are extended horizontally forward. The force required to move a limb segment does not exceed 2 g's throughout the range of limb motion.

(g) Performance tests are conducted at any temperature from 66 °F to 78 °F and at any relative humidity from 10 percent to 70 percent after exposure of the dummy to these conditions for a period of not less than 4 hours.

(h) For the performance of tests specified in §§ 572.42 and 572.43, the dummy is positioned as follows:

(1) The dummy is placed on a flat, rigid, clean, dry, horizontal smooth aluminum surface whose length and width dimensions are not less than 16 inches, so that the dummy's midsagittal plane is vertical and centered on the test surface. The dummy's torso is positioned to meet the requirements of § 572.42 and § 572.43. The seating surface is without the back support and the test dummy is positioned so that the dummy's midsagittal plane is vertical and centered on the seat surface.

(2) The legs are positioned so that their centerlines are in planes parallel to the midsagittal plane.

(3) Performance pre-tests of the assembled dummy are separated in time by a period of not less than 20 minutes unless otherwise specified.

(4) Surfaces of the dummy components are not painted except as specified in this part or in drawings subtended by this part.

[55 FR 45766, Oct. 30, 1990, as amended at 56 FR 47011, Sept. 17, 1991; 59 FR 52091, Oct. 14, 1994]

APPENDIX A TO SUBPART F OF PART 572—FIGURES

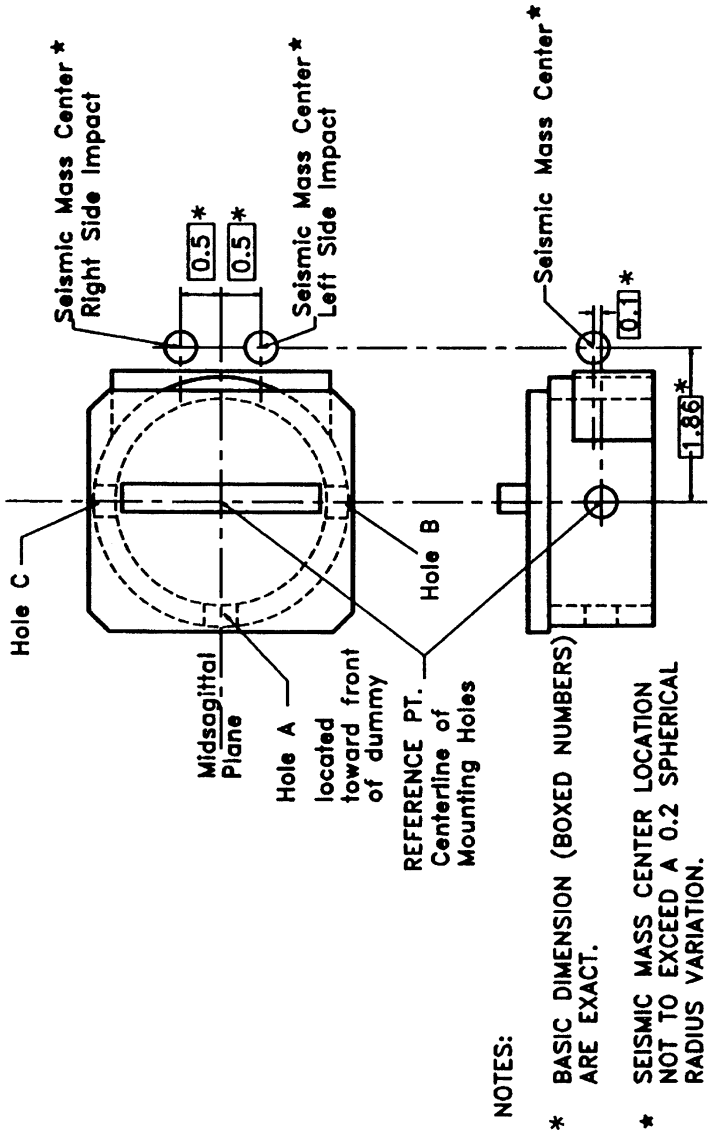

Accelerometer Seismic Mass Location on Assembly SID #005

FIGURE 30

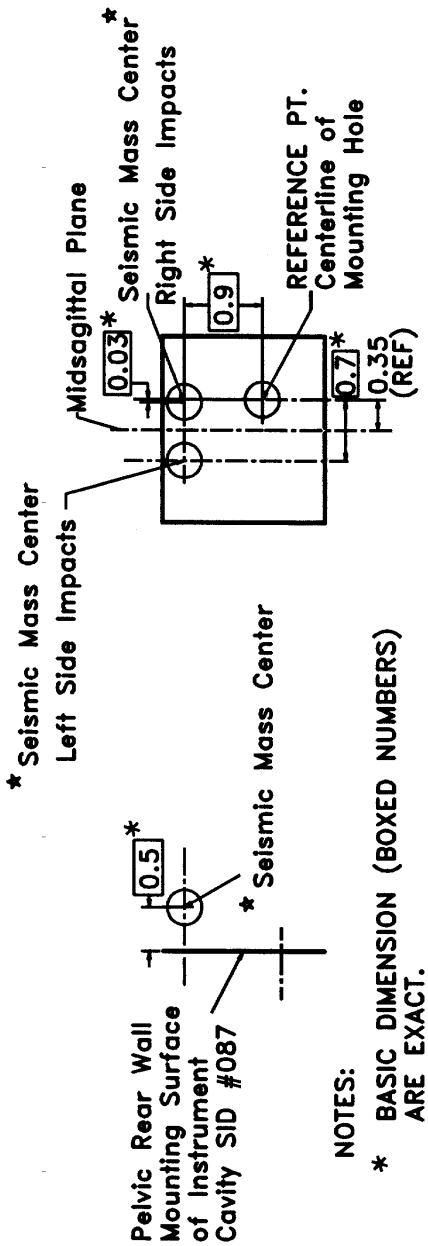

NOTES:

* BASIC DIMENSION (BOXED NUMBERS) ARE EXACT.

* SEISMIC MASS CENTER LOCATION NOT TO EXCEED A 0.2 SPHERICAL RADIUS VARIATION.

Pelvis Accelerometer Seismic Mass Location

FIGURE 31

[59 FR 52092, Oct. 14, 1994]

Subparts G–H [Reserved]

Subpart I—6-Year-Old Child

SOURCE: 56 FR 57836, Nov. 14, 1991, unless otherwise noted.

§ 572.70 Incorporation by reference.

(a) The drawings and specifications referred to in §§ 572.71(a) and 572.71(b) are hereby incorporated in subpart I by reference. These materials are thereby made part of this regulation. The Director of the Federal Register approved the materials incorporated by reference in accordance with 5 U.S.C. 552(a) and 1 CFR part 51. Copies of the materials may be inspected at NHTSA's Docket Section, 400 Seventh Street, SW., room 5109, Washington, DC, or at the National Archives and Records Administration (NARA). For information on the availability of this material at NARA, call 202–741–6030, or go to: *http://www.archives.gov/federal_register/code_of_federal_regulations/ibr_locations.html*.

(b) The incorporated material is available as follows:

(1) Drawing number SA 106 C001 sheets 1 through 18, and the drawings listed in the parts lists described on sheets 8 through 17, are available from Reprographic Technologies, 9000 Virginia Manor Rd., Beltsville, MD 20705, Telephone (301) 210–5600, Fax (301) 210–5607.

(2) A User's Manual entitled, ''Six-Year-Old Size Child Test Dummy SA106C,'' October 28, 1991, is available from Reprographic Technologies at the address in paragraph (b)(1) of this section.

(3) SAE Recommended Practice J211, Instrumentation for Impact Test, June 1988, is available from the Society of Automotive Engineers, Inc., 400 Commonwealth Drive, Warrendale, PA 15096–0001.

[56 FR 57836, Nov. 14, 1991, as amended at 62 FR 44226, Aug. 20, 1997]

§ 572.71 General description.

(a) The representative 6-year-old dummy consists of a drawings and specifications package that contains the following materials:

(1) Technical drawings, specifications, and the parts list package shown in SA 106C 001, sheets 1 through 18, re-released July 11, 1997;

(2) A user's manual entitled, ''Six-Year-Old Size Child Test Dummy SA106C,'' October 28, 1991.

(b) The dummy is made up of the component assemblies set out in Table A:

TABLE A

Assembly drawing No.	Drawing title	Listed on drawing No.	Revision
SA 106C 010	Head Assembly	SA 106C 001, sheet 8	A
SA 106C 020	Neck Assembly	SA 106C 001, sheet 9	A
SA 106C 030	Thorax Assembly	SA 106C 001, sheet 10	C
SA 106C 030	Thorax Assembly	SA 106C 001, sheet 11	D
SA 106C 041	Arm Assembly (right)	SA 106C 001, sheet 14	A
SA 106C 042	Arm Assembly (left)	SA 106C 001, sheet 15	A
SA 106C 050	Lumbar Spine Assembly	SA 106C 001, sheet 12	A
SA 106C 060	Pelvis Assembly	SA 106C 001, sheet 13	A
SA 106C 071	Leg Assembly (right)	SA 106C 001, sheet 16	A
SA 106C 072	Leg Assembly (left)	SA 106C 001, sheet 17	A

(c) Adjacent segments are joined in a manner such that except for contacts existing under static conditions, there is no contact between metallic elements throughout the range of motion or under simulated crash-impact conditions.

(d) The structural properties of the dummy are such that the dummy conforms to this part in every respect both before and after its use in any test similar to those specified in Standard 213, Child Restraint Systems.

[56 FR 57836, Nov. 14, 1991, as amended at 62 FR 44226, Aug. 20, 1997]

§ 572.72 Head assembly and test procedure.

(a) *Head assembly*. The head consists of the assembly designated as SA 106

010 on drawing No. SA 106C 001, sheet 2, and conforms to each drawing listed on SA 106C 001, sheet 8.

(b) *Head assembly impact response requirements.* When the head is impacted by a test probe conforming to § 572.77(a)(1) at 7 feet per second (fps) according to the test procedure in paragraph (c) of this section, then the resultant head acceleration measured at the location of the accelerometer installed in the headform according to § 577.77(b) is not less than 130g and not more than 160g.

(1) The recorded acceleration-time curve for this test is unimodal at or above the 50g level, and lies at or above that level for an interval not less than 1.0 and not more than 2.0 milliseconds.

(2) The lateral acceleration vector does not exceed 5g.

(c) *Head test procedure.* The test procedure for the head is as follows:

(1) Seat and orient the dummy on a seating surface having a back support as specified in § 572.78(c), and adjust the joints of the limbs at any setting (between 1g and 2g) which just supports the limbs' weight when the limbs are extended horizontally and forward.

(2) Adjust the test probe so that its longitudinal center line is—

(i) At the forehead at the point of orthogonal intersection of the head midsagittal plane and the transverse plane which is perpendicular to the Z axis of the head as shown in Figure 40;

(ii) Located 2.7 ±0.1 inches below the top of the head measured along the Z axis, and;

(iii) Coincides within 2 degrees with the line made by the intersection of the horizontal and midsagittal planes passing through this point.

(3) Impact the head with the test probe so that at the moment of contact the probe's longitudinal center line falls within 2 degrees of a horizontal line in the dummy's midsagittal plane.

(4) Guide the test probe during impact so that there is no significant lateral, vertical, or rotational movement.

(5) Allow at least 60 minutes between successive head tests.

§ 572.73 Neck assembly and test procedure.

(a) *Neck assembly.* The neck consists of the assembly designated as SA 106C 020 on drawing SA 106C 001, sheet 2, and conforms to each drawing listed on SA 106C 001, sheet 9.

(b) *Neck assembly impact response requirements.* When the head-neck assembly (SA 106C 010 and SA 106C 020) is tested according to the test procedure in § 572.73(c), the head:

(1) Shall rotate, while translating in the direction of the pendulum preimpact flight, in reference to the pendulum's longitudinal center line a total of 78 degrees ±6 degrees about the head's center of gravity; and

(2) Shall rotate to the extent specified in Table B at each indicated point in time, measured from time of impact, with the chordal displacement measured at the head's center of gravity.

(i) Chordal displacement at time ''T'' is defined as the straight line distance between the position relative to the pendulum arm of the head's center of gravity at time ''zero;'' and the position relative to the pendulum arm of the head's center of gravity at time T as illustrated by Figure 3 in § 572.11.

(ii) The peak resultant acceleration recorded at the location of the accelerometers mounted in the headform according to § 572.77(b) shall not exceed 30g.

TABLE B

Rotation (degrees)	Time (ms) ±(2+.08T)	Chordal displacement (inches) ±0.8
0	0	0
30	26	2.7
60	44	4.3
Maximum	68	5.8
60	101	4.4
30	121	2.4
0	140	0

(3) The pendulum shall not reverse direction until the head's center of gravity returns to the original ''zero'' time position relative to the pendulum arm.

(c) *Neck test procedure.* The test procedure for the neck is as follows:

(1) Mount the head and neck assembly on a rigid pendulum as specified in § 572.21, Figure 15, so that the head's midsagittal plane is vertical and coincides with the plane of motion of the pendulum's longitudinal center line. Attach the neck directly to the pendulum as shown in § 572.21, Figure 15.

(2) Release the pendulum and allow it to fall freely from a height such that the velocity at impact is 17.00 ±1.0 fps, measured at the center of the accelerometer specified in § 572.21, Figure 15.

(3) Decelerate the pendulum to a stop with an acceleration-time pulse described as follows:

(i) Establish 5g and 20g levels on the a-t curve.

(ii) Establish t_1 at the point where the rising a-t curve first crosses the 5g level; t_2 at the point where the rising a-t curve first crosses the 20g level; t_3 at the point where the decaying a-t curve last crosses the 20g level; and t_4 at the point where the decaying a-t curve first crosses the 5g level.

(iii) $t_2 - t_1$ shall not be more than 3 milliseconds.

(iv) $t_3 - t_2$ shall not be more than 22 milliseconds, and not less than 19 milliseconds.

(v) $t_4 - t_3$ shall not be more than 6 milliseconds.

(vi) The average deceleration between t_2 and t_3 shall not be more than 26g, or less than 22g.

(4) Allow the neck to flex without the head or neck contacting any object other than the pendulum arm.

(5) Allow at least 60 minutes between successive tests.

[56 FR 57836, Nov. 14, 1991, as amended at 57 FR 4086, Feb. 3, 1992]

§ 572.74 Thorax assembly and test procedure.

(a) *Thorax assembly*. The thorax consists of the part of the torso assembly designated as SA 106C 030 on drawing SA 106C 001, sheet 2, Revision A, and conforms to each applicable drawing on SA 106C 001 sheet 10, Revision C (including Drawing number 6C–1610–1 thru –4, Revision A, titled ''Screw Button Head Socket'', dated September 30, 1996, and Drawing number 6C–1021, Revision B, titled ''Ballast, 6 Yr. Thoraxc (for 7267A)'', dated September 24, 1996), and sheet 11, Revision D (including Drawing number SA 6C–909, Revision A, titled ''Cover-chest Accelerometer'', dated September 21, 1996, and Drawing number 6C–1000–1, Revision C, titled ''Sternum Thoracic Weld Ass'y.'', dated September 24, 1996).

(b) *Thorax assembly requirements*. When the thorax is impacted by a test probe conforming to § 572.77(a) to 20 ±0.3 fps according to the test procedure in paragraph (c) of this section, the peak resultant accelerations at the accelerometers mounted in the chest cavity according to § 572.77(c) shall not be less than 43g and not more than 53g.

(1) The recorded acceleration-time curve for this test shall be unimodal at or above the 30g level, and shall lie at or above that level for an interval not less than 4 milliseconds and not more than 6 milliseconds.

(2) The lateral accelerations shall not exceed 5g.

(c) *Thorax test procedure*. The test procedure for the thorax is as follows:

(1) Seat and orient the dummy on a seating surface without back support as specified in § 572.78(c), and adjust the joints of the limbs at any setting (between 1g and 2g) which just supports the limbs' weight when the limbs are extended horizontally and forward, parallel to the midsagittal plane.

(2) Establish the impact point at the chest midsagittal plane so that the impact point is 2.25 inches below the longitudinal center of the clavicle retainer screw, and adjust the dummy so that the plane that bisects the No. 3 rib into upper and lower halves is horizontal ±1 degree.

(3) Place the longitudinal center line of the test probe so that it coincides with the designated impact point, and align the test probe so that at impact, the probe's longitudinal center line coincides (within 2 degrees) with the line formed at the intersection of the horizontal and midsagittal planes and passing through the designated impact point.

(4) Impact the thorax with the test probe so that at the moment of contact the probe's longitudinal center line falls within 2 degrees of a horizontal line in the dummy's midsagittal plane.

(5) Guide the test probe during impact so that there is no significant lateral, vertical, or rotational movement.

(6) Allow at least 30 minutes between successive tests.

[56 FR 57836, Nov. 14, 1991, as amended at 60 FR 2897, Jan. 12, 1995; 62 FR 44227, Aug. 20, 1997]

§ 572.75 Lumbar spine, abdomen, and pelvis assembly and test procedure.

(a) *Lumbar spine, abdomen, and pelvis assembly*. The lumbar spine, abdomen, and pelvis consist of the part of the torso assembly designated as SA 106C 50 and 60 on drawing SA 106C 001, sheet 2, and conform to each applicable drawing listed on SA 106C 001, sheets 12 and 13.

(b) *Lumbar spine, abdomen, and pelvis assembly response requirements*. When the lumbar spine is subjected to a force continuously applied according to the test procedure set out in paragraph (c) of this section, the lumbar spine assembly shall—

(1) Flex by an amount that permits the rigid thoracic spine to rotate from the torso's initial position, as defined in (c)(3), by 40 degrees at a force level of not less that 46 pounds and not more than 52 pounds, and

(2) Straighten upon removal of the force to within 5 degrees of its initial position when the force is removed.

(c) *Lumbar spine, abdomen, and pelvis test procedure*. The test procedure for the lumbar spine, abdomen, and pelvis is as follows:

(1) Remove the dummy's head-neck assembly, arms, and lower legs, clean and dry all component surfaces, and seat the dummy upright on a seat as specified in Figure 42.

(2) Adjust the dummy by—

(i) Tightening the femur ballflange screws at each hip socket joint to 50 inch-pounds torque;

(ii) Attaching the pelvis to the seating surface by a bolt D/605 as shown in Figure 42.

(iii) Attaching the upper legs at the knee joints by the attachments shown in drawing Figure 42.

(iv) Tightening the mountings so that the pelvis-lumbar joining surface is horizontal; and

(v) Removing the head and neck, and installing a cylindrical aluminum adapter (neck adapter) of 2.0 inches diameter and 2.60 inches length as shown in Figure 42.

(3) The initial position of the dummy's torso is defined by the plane formed by the rear surfaces of the shoulders and buttocks which is three to seven degrees forward of the transverse vertical plane.

(4) Flex the thorax forward 50 degrees and then rearward as necessary to return the dummy to its initial torso position, unsupported by external means.

(5) Apply a forward pull force in the midsagittal plane at the top of the neck adapter so that when the lumbar spine flexion is 40 degrees, the applied force is perpendicular to the thoracic spine box.

(i) Apply the force at any torso deflection rate between 0.5 and 1.5 degrees per second, up to 40 degrees of flexion.

(ii) For 10 seconds, continue to apply a force sufficient to maintain 40 degrees of flexion, and record the highest applied force during the 10 second period.

(iii) Release all force as rapidly as possible, and measure the return angle 3 minutes after the release.

§ 572.76 Limbs assembly and test procedure.

(a) *Limbs assembly*. The limbs consist of the assemblies designated as SA 106C 041, SA 106C 042, SA 106C 071, and SA 106C 072, on drawing No. SA 106C 001, sheet 2, and conform to each applicable drawing listed on SA 106C 001, sheets 14 through 17.

(b) *Limbs assembly impact response requirement*. When each knee is impacted at 7.0 ±0.1 fps, according to paragraph (c) of this section, the maximum force on the femur shall not be more than 1060 pounds and not less than 780 pounds, with a duration above 400 pounds of not less than 0.8 milliseconds.

(c) *Limbs test procedure*. The test procedure for the limbs is as follows:

(1) Seat and orient the dummy without back support on a seating surface that is 11 ±0.2 inches above a horizontal (floor) surface as specified in § 572.78(c).

(i) Orient the dummy as specified in Figure 43 with the hip joint adjustment at any setting between 1g and 2g.

(ii) Place the dummy legs in a plane parallel to the dummy's midsagittal plane with the knee pivot center line perpendicular to the dummy's midsagittal plane, and with the feet flat on the horizontal (floor) surface.

(iii) Adjust the feet and lower legs until the line between the midpoint of

each knee pivot and each ankle pivot is within 2 degrees of the vertical.

(2) If necessary, reposition the dummy so that at the level one inch below the seating surface, the rearmost point of the dummy's lower legs remains not less than 3 inches and not more than 6 inches forward of the forward edge of the seat.

(3) Align the test probe specified in § 572.77(a) with the longitudinal center line of the femur force gauge, so that at impact, the probe's longitudinal center line coincides with the sensor's longitudinal center line within ±2 degrees.

(4) Impact the knee with the test probe moving horizontally and parallel to the midsagittal plane at the specified velocity.

(5) Guide the test probe during impact so that there is no significant lateral, vertical, or rotational movement.

§ 572.77 Instrumentation.

(a)(1) *Test probe*. For the head, thorax, and knee impact test, use a test probe that is rigid, of uniform density and weighs 10 pounds and 6 ounces, with a diameter of 3 inches; a length of 13.8 inches; and an impacting end that has a rigid flat right face and edge radius of 0.5 inches.

(2) The head and thorax assembly may be instrumented either with a Type A or Type B accelerometer.

(i) Type A accelerometer is defined in drawing SA 572 S1.

(ii) Type B accelerometer is defined in drawing SA 572 S2.

(b) *Head accelerometers*. (1) Install accelerometers in the head as shown in drawing SA 106C 001 sheet 1 using suitable spacers or adaptors as needed to affix them to the horizontal transverse bulkhead so that the sensitive axes of the three accelerometers intersect at the point in the midsagittal plane located 0.4 inches below the intersection of a line connecting the longitudinal center lines of the roll pins in either side of the dummy's head with the head's midsagittal plane.

(2) The head has three orthogonally mounted accelerometers aligned as follows:

(i) Align one accelerometer so that its sensitive axis is perpendicular to the horizontal bulkhead in the midsagittal plane.

(ii) Align the second accelerometer so that its sensitive axis is parallel to the horizontal bulkhead, and perpendicular to the midsagittal plane.

(iii) Align the third accelerometer so that its sensitive axis is parallel to the horizontal bulkhead in the midsagittal plane.

(iv) The seismic mass center for any of these accelerometers may be at any distance up to 0.4 inches from the axial intersection point.

(c) *Thoracic accelerometers*. (1) Install accelerometers in the thoracic assembly as shown in drawing SA 106C 001, sheet 1, using suitable spacers and adaptors to affix them to the frontal surface of the spine assembly so that the sensitive axes of the three accelerometers intersect at a point in the midsagittal plane located 0.95 inches posterior of the spine mounting surface, and 0.55 inches below the horizontal centerline of the two upper accelerometer mount attachment hole centers.

(2) The sternum-thoracic assembly has three orthogonally mounted accelerometers aligned as follows:

(i) Align one accelerometer so that its sensitive axis is parallel to the attachment surface in the midsagittal plane.

(ii) Align the second accelerometer so that its sensitive axis is parallel to the attachment surface, and perpendicular to the midsagittal plane.

(iii) Align the third accelerometer so that its sensitive axis is perpendicular to the attachment surface in the midsagittal plane.

(iv) The seismic mass center for any of these accelerometers may be at any distance up to 0.4 inches of the axial intersection point.

(d) *Femur-sensing device*. Install a force-sensing device SA 572–S10 axially in each femur shaft as shown in drawing SA 106C 072 and secure it to the femur assembly so that the distance measured between the center lines of two attachment bolts is 3.00 inches.

(e) *Limb joints*. Set the limb joints at lg, barely restraining the limb's weight when the limb is extended horizontally, and ensure that the force required to move the limb segment does not exceed 2g throughout the limb's range of motion.

(f) *Recording outputs*. Record the outputs of acceleration and force-sensing devices installed in the dummy and in the test apparatus specified in this part, in individual channels that conform to the requirements of SAE Recommended Practice J211, October 1988, with channel classes as set out in the following table C.

TABLE C

Device	Channel
Head acceleration	Class 1000
Pendulum acceleration	Class 60
Thorax acceleration	Class 180
Femur-force	Class 600

The mountings for sensing devices shall have no resonance frequency within a range of 3 times the frequency range of the applicable channel class.

§ 572.78 Performance test conditions.

(a) Conduct performance tests at any temperature from 66 °F to 78 °F, and at any relative humidity from 10 percent to 70 percent, but only after having first exposed the dummy to these conditions for a period of not less than 4 hours.

(b) For the performance tests specified in § 572.72 (head), § 572.74 (thorax), § 572.75 (lumbar spine, abdomen, and pelvis), and § 572.76 (limbs), position the dummy as set out in paragraph (c) of this section.

(c) Place the dummy on a horizontal seating surface covered by teflon sheeting so that the dummy's midsagittal plane is vertical and centered on the test surface.

(1) The seating surface is flat, rigid, clean, and dry, with a smoothness not exceeding 40 microinches, a length of at least 16 inches, and a width of at least 16 inches.

(2) For head impact tests, the seating surface has a vertical back support whose top is 12.4 ±0.2 inches above the horizontal surface, and the rear surfaces of the dummy's back and buttocks touch the back support as shown in Figure 40.

(3) For the thorax, lumbar spine, and knee tests, the horizontal surface is without a back support as shown in Figure 41 (for the thorax); Figure 42 (for the lumbar spine); and Figure 43 (for the knee).

(4) Position the dummy's arms and legs so that their center lines are in planes parallel to the midsagittal plane.

(5) Adjust each shoulder yoke so that with its upper surface horizontal, a yoke is at the midpoint of its anterior-posterior travel.

(6) Adjust the dummy for head and knee impact tests so that the rear surfaces of the shoulders and buttocks are tangent to a transverse vertical plane.

(d) The dummy's dimensions are specified in drawings SA 106C 001, sheet 3, Revision A, July 11, 1997, and sheets 4 through 6.

(e) Unless otherwise specified in this regulation, performance tests of the same component, segment, assembly or fully assembled dummy are separated in time by a period of not less than 20 minutes.

(f) Unless otherwise specified in this regulation, the surfaces of the dummy components are not painted.

[56 FR 57836, Nov. 14, 1991, as amended at 62 FR 44227, Aug. 20, 1997]

FIGURES TO SUBPART I OF PART 572

FIGURE 40
HEAD IMPACT TEST SET-UP

43

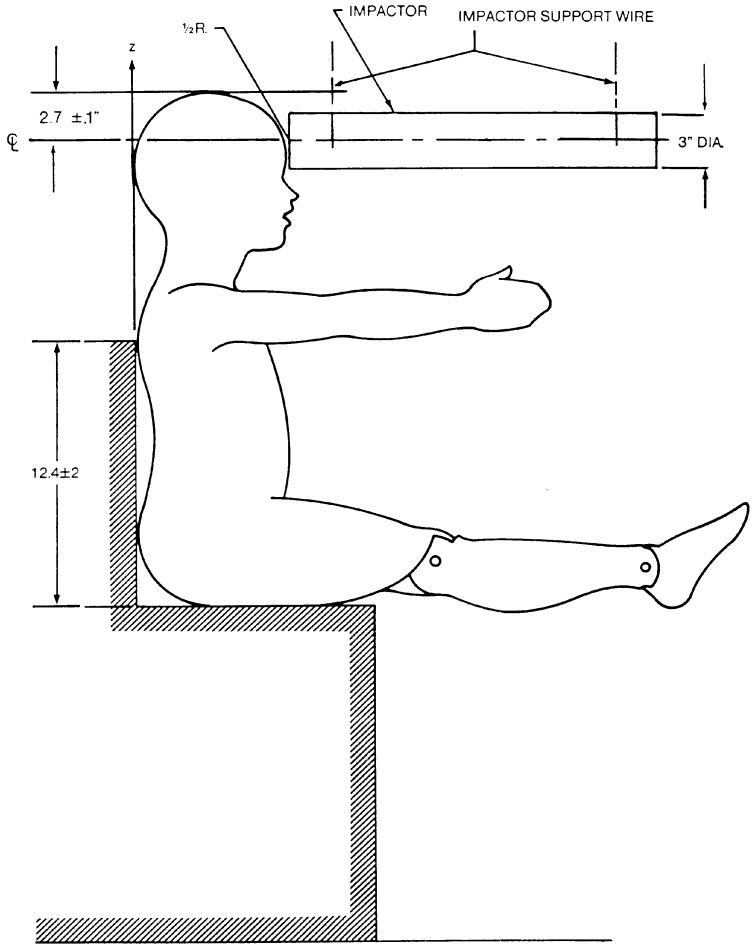

NOTES: 1. DUMMY IMPACT SENSORS NOT USED IN THIS TEST MAY BE REPLACED BY EQUIVALENT DEAD WEIGHTS.

2. NO EXTERNAL SUPPORTS ARE REQUIRED ON THE DUMMY TO MEET SET-UP SPECIFICATIONS.

3. THE MIDSAGITTAL PLANE OF THE DUMMY IS VERTICAL WITHIN +/−1 DEG.

4. THE MIDSAGITTAL PLANE OF THE HEAD IS CENTERED WITH RESPECT TO THE LONGITUDINAL CENTERLINE OF THE PENDULUM WITHIN 0.12 IN.

FIGURE 41
THORAX IMPACT TEST SET-UP

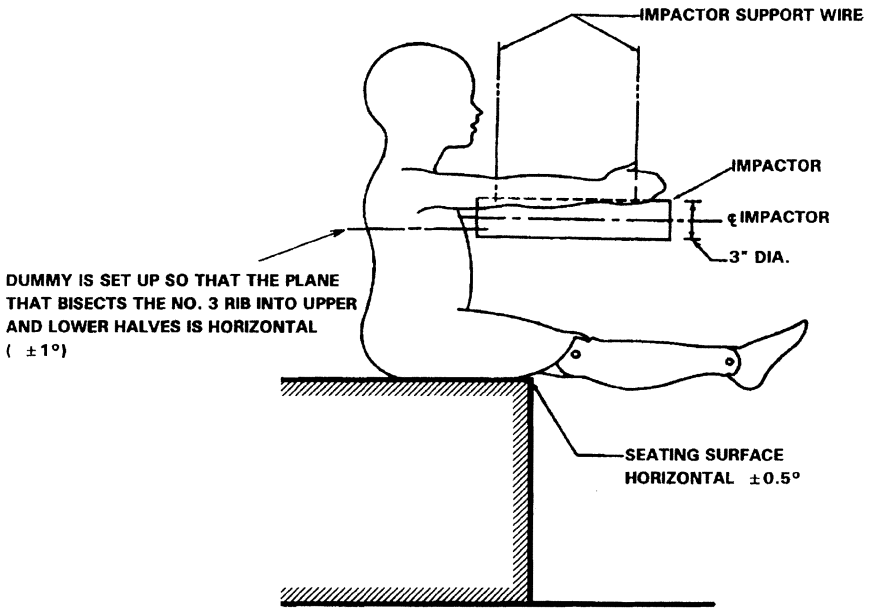

NOTES:

1. DUMMY IMPACT SENSORS NOT USED IN THIS TEST MAY BE REPLACED BY EQUILVALENT DEAD WEIGHTS.
2. NO EXTERNAL SUPPORTS ARE REQUIRED ON THE DUMMY TO MEET SET-UP SPECIFICATIONS.
3. THE MIDSAGITTAL PLANE OF THE DUMMY IS VERTICAL WITHIN +/-1 DEG.
4. THE MIDSAGITTAL PLANE OF THE THORAX IS CENTERED WITH RESPECT TO THE LONGITUDINAL CENTERLINE OF THE PENDULUM WITHIN 0.12 IN.

[60 FR 2898, Jan. 12, 1995]

45

FIGURE 42
LUMBAR SPINE FLEXION TEST SET-UP

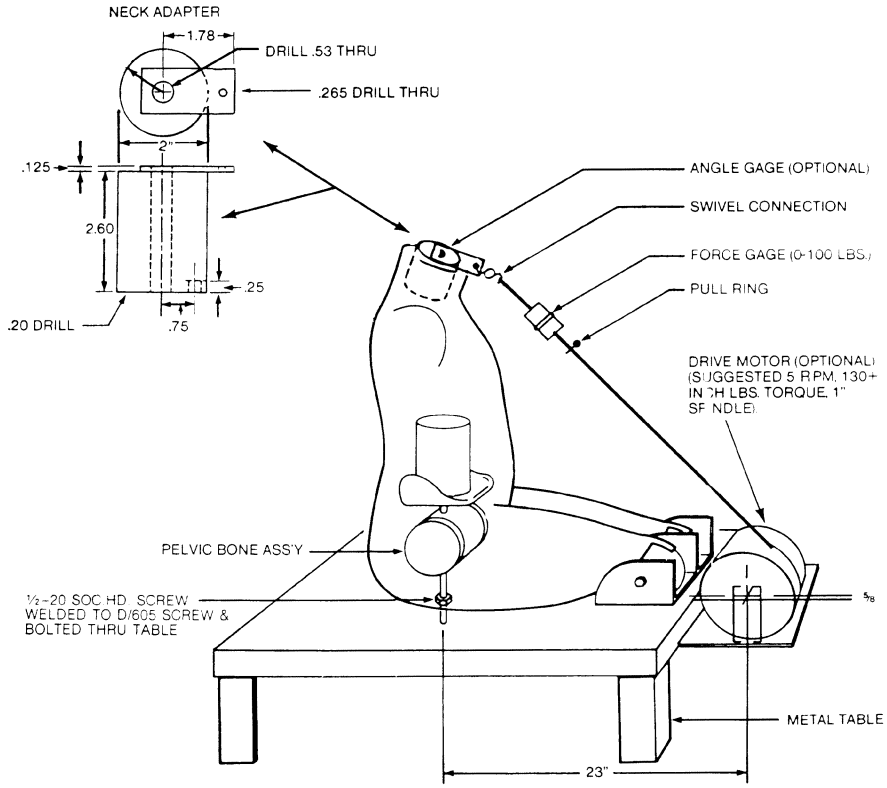

NOTES: 1. DUMMY IMPACT SENSORS NOT USED IN THIS TEST MAY BE REPLACED BY EQUIVALENT DEAD WEIGHTS.

2. NO EXTERNAL SUPPORTS ARE REQUIRED ON THE DUMMY TO MEET SET-UP SPECIFICATIONS.

3. THE MIDSAGITTAL PLANE OF THE DUMMY IS VERTICAL WITHIN + /−1 DEG.

4. THE DUMMY IN THE SEATED POSITION IS FIRMLY AFFIXED TO THE TEST BENCH AT THE PELVIC BONE AND AT THE KNEES.

5. THE PULL-FLEXION FORCE, APPLIED THROUGH A RIGID NECK ADAPTOR WHICH IS MOUNTED ON TOP OF THE THORACIC STERNUM ASSEMBLY (C/601), IS ALIGNED WITH THE MIDSAGITTAL PLANE OF THE DUMMY WITHIN +/−1 DEG.

6. THE SWIVEL FOR THE FORCE MEASURING SENSOR MUST NOT BIND OR BOTTOM OUT THROUGH THE ENTIRE LOADING CYCLE.

46

FIGURE 43
KNEE IMPACT TEST SET-UP

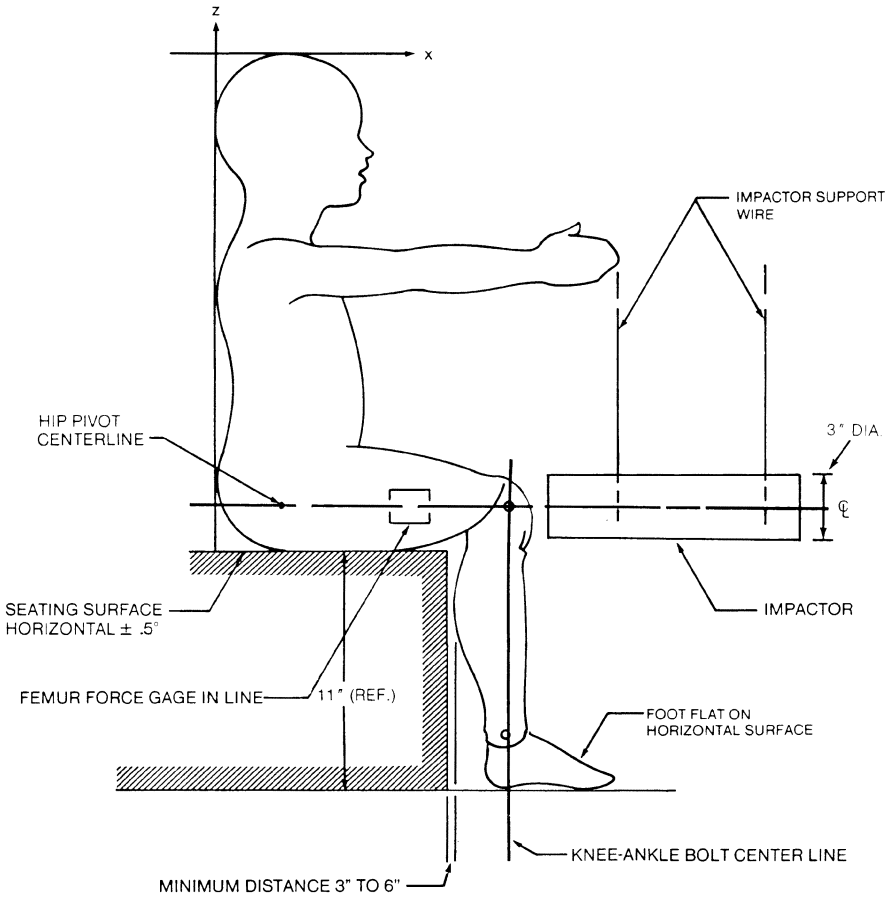

NOTES: 1. DUMMY IMPACT SENSORS NOT USED IN THIS TEST MAY BE REPLACED BY EQUIVALENT DEAD WEIGHTS.

2. NO EXTERNAL SUPPORTS ARE REQUIRED ON THE DUMMY TO MEET SET-UP SPECIFICATIONS.

3. THE MIDSAGITTAL PLANE OF THE DUMMY IS VERTICAL WITHIN +/−1 DEG.

4. CENTERLINE OF THE IMPACTED FEMUR IS ALIGNED WITH THE CENTERLINE OF THE IMPACTOR AND THE PLANE OF THE IMPACTOR MOTION WITHIN +/−1 DEG.

Subpart J—9-Month Old Child

SOURCE: 56 FR 41080, Aug. 19, 1991, unless otherwise noted.

§ 572.80 Incorporated materials.

The drawings and specifications referred to in § 572.81(a) that are not set forth in full are hereby incorporated in

this part by reference. These materials are thereby made part of this regulation. The Director of the Federal Register approved the materials incorporated by reference in accordance with 5 U.S.C. 552(a) and 1 CFR part 51. Copies of the materials may be obtained from Rowley-Scher Reprographics, Inc., 1216 K Street, NW., Washington, DC 20002, telephone (202) 628–6667. Copies are available for inspection in the general reference section of Docket 89–11, Docket Section, National Highway Traffic Safety Administration, room 5109, 400 Seventh Street, SW., Washington, DC, or at the National Archives and Records Administration (NARA). For information on the availability of this material at NARA, call 202–741–6030, or go to: *http://www.archives.gov/federal_register/code_of_federal_regulations/ibr_locations.html*.

§ 572.81 General description.

(a) The dummy consists of: (1) The assembly specified in drawing LP 1049/A, March 1979, which is described in its entirety by means of approximately 54 separate drawings and specifications, 1049/1 through 1049/54; and (2) a parts list LP 1049/0 (5 sheets); and (3) a report entitled, ''The TNO P3/4 Child Dummy Users Manual,'' January 1979, published by Instituut voor Wegtransportmiddelen TNO.

(b) Adjacent dummy segments are joined in a manner such that throughout the range of motion and also under simulated crash-impact conditions there is no contact between metallic elements except for contacts that exist under static conditions.

(c) The structural properties of the dummy are such that the dummy conforms to this part in every respect both before and after being used in dynamic tests such as that specified in Standard No. 213 of this chapter (§ 571.213).

§ 572.82 Head.

The head consists of the assembly shown in drawing LP 1049/A and conforms to each of the applicable drawings listed under LP 1049/0 through 54.

§ 572.83 Head-neck.

The head-neck assembly shown in drawing 1049/A consists of parts specified as items 1 through 16 and in item 56.

§ 572.84 Thorax.

The thorax consists of the part of the torso shown in assembly drawing LP 1049/A and conforms to each of the applicable drawings listed under LP 1049/0 through 54.

§ 572.85 Lumbar spine flexure.

(a) When subjected to continuously applied force in accordance with paragraph (b) of this section, the lumbar spine assembly shall flex by an amount that permits the thoracic spine to rotate from its initial position in accordance with Figure No. 18 of § 572.21 (49 CFR part 572) by 40 degrees at a force level of not less than 18 pounds and not more than 22 pounds, and straighten upon removal of the force to within 5 degrees of its initial position.

(b) *Test procedure.* (1) The lumbar spine flexure test is conducted on a dummy assembly as shown in drawing LP 1049/A, but with the arms (which consist of parts identified as items 17 through 30) and all head-neck parts (identified as items 1 through 13 and 59 through 63), removed.

(2) With the torso assembled in an upright position, adjust the lumbar cable by tightening the adjustment nut for the lumbar vertebrae until the spring is compressed to ⅔ of its unloaded length.

(3) Position the dummy in an upright seated position on a seat as indicated in Figure No. 18 of § 572.21 (lower legs do not need to be removed, but must be clamped firmly to the seating surface), ensuring that all dummy component surfaces are clean, dry and untreated unless otherwise specified.

(4) Firmly affix the dummy to the seating surface through the pelvis at the hip joints by suitable clamps that also prevent any relative motion with respect to the upper legs during the test in § 572.65(c)(3) of this part. Install a pull attachment at the neck to torso juncture as shown in Figure 18 of § 572.21.

(5) Flex the thorax forward 50 degrees and then rearward as necessary to return it to its initial position.

(6) Apply a forward pull force in the midsagittal plane at the top of the

neck adapter so that at 40 degrees of the lumbar spine flexion the applied force is perpendicular to the thoracic spine box. Apply the force at any torso deflection rate between 0.5 and 1.5 degrees per second up to 40 degrees of flexion but no further; maintain 40 degrees of flexion for 10 seconds, and record the highest applied force during that time. Release all force as rapidly as possible and measure the return angle three minutes after release.

§ 572.86 Test conditions and dummy adjustment.

(a) With the complete torso on its back lying on a horizontal surface and the neck assembly mounted and shoulders on the edge of the surface, adjust the neck such that the head bolt is lowered 0.40 ±0.05 inches (10 ±1 mm) after a vertically applied load of 11.25 pounds (50 N) applied to the head bolt is released.

(b) With the complete torso on its back with the adjusted neck assembly as specified in § 572.66(a), and lying on a horizontal surface with the shoulders on the edge of the surface, mount the head and tighten the head bolt and nut firmly, with the head in horizontal position. Adjust the head joint at the force between 1–2g, which just supports the head's weight.

(c) Using the procedures described below, limb joints are set at the force between 1–2g, which just supports the limbs' weight when the limbs are extended horizontally forward:

(1) With the complete torso lying with its front down on a horizontal surface, with the hip joint just over the edge of the surface, mount the upper leg and tighten hip joint nut firmly. Adjust the hip joint by releasing the hip joint nut until the upper leg just starts moving.

(2) With the complete torso and upper leg lying with its front up on a horizontal surface, with the knee joint just over the edge of the surface, mount the lower leg and tighten knee joint firmly. Adjust the knee joint by releasing the knee joint nut until the lower leg just starts moving.

(3) With the torso in an upright position, mount the upper arm and tighten firmly the adjustment bolts for the shoulder joint with the upper arm placed in a horizontal position. Adjust the shoulder joint by releasing the shoulder joint nut until the upper arm just starts moving.

(4) With the complete torso in an upright position and upper arm in a vertical position, mount the forearm in a horizontal position and tighten the elbow hinge bolt and nut firmly. Adjust the elbow joint nut until the forearm just starts moving.

(d) With the torso assembled in an upright position, the adjustment nut for the lumbar vertebrae is tightened until the spring is compressed to ⅔ of its unloaded length.

(e) Performance tests are conducted at any temperature from 66 to 78 degrees F and at any relative humidity from 10 percent to 70 percent after exposure of the dummy to these conditions for a period of not less than four hours.

(f) Performance tests of the same component, segment, assembly or fully assembled dummy are separated in time by a period of not less than 20 minutes unless otherwise specified.

(g) Surfaces of the dummy components are not painted except as specified in the part or in drawings incorporated by this part.

Subpart K—Newborn Infant

SOURCE: 58 FR 3232, Jan. 8, 1993, unless otherwise noted.

§ 572.90 Incorporation by reference.

(a) The drawings and specifications referred to in § 572.91(a) are hereby incorporated in subpart K by reference. These materials are thereby made part of this regulation. The Director of the Federal Register approved that materials incorporated by reference in accordance with 5 U.S.C. 552(a) and 1 CFR part 51. Copies of the materials may be inspected at NHTSA's Docket Section, 400 Seventh Street, SW., room 5109, Washington, DC, or at the National Archives and Records Administration (NARA). For information on the availability of this material at NARA, call 202–741–6030, or go to: *http://www.archives.gov/federal_register/code_of_federal_regulations/ibr_locations.html.*

(b) The incorporated material is available as follows:

(1) Drawing numbers 126–0000 through 126–0015 (sheets 1 through 3), 126–0017 through 126–0027, and a parts list entitled ''Parts List for CAMI Newborn Dummy,'' are available from Reprographic Technologies, 1111 14th Street, NW., Washington, DC 20005. (202) 628–6667.

(2) A construction manual entitled, ''Construction of the Newborn Infant Dummy'' (July 1992) is available from Reprographic Technologies at the address in paragraph (b)(1) of this section.

§572.91 General description.

(a) The representative newborn infant dummy consists of a drawings and specifications package that contains the following materials:

(1) Drawing numbers 126–0000 through 126–0015 (sheets 1 through 3), 126–0017 through 126–0027, and a parts list entitled ''Parts List for CAMI Newborn Dummy''; and,

(2) A construction manual entitled, ''Construction of the Newborn Infant Dummy'' (July 1992).

(b) The structural properties of the dummy are such that the dummy conforms to this part in every respect both before and after being used in dynamic tests specified in Standard No. 213 of this chapter (§571.213).

Subpart L—Free Motion Headform

SOURCE: 60 FR 43058, Aug. 18, 1995, unless otherwise noted.

§572.100 Incorporation by Reference.

(a) The drawings and specifications referred to in §572.101 are hereby incorporated in subpart L by reference. These materials are thereby made part of this regulation. The Director of the Federal Register approved the materials incorporated by reference in accordance with 5 U.S.C. 552(a) and 1 CFR part 51. Copies of the materials may be inspected at NHTSA's Docket Section, 400 Seventh Street, S.W., room 5109, Washington, DC, or at the National Archives and Records Administration (NARA). For information on the availability of this material at NARA, call 202–741–6030, or go to: *http://www.archives.gov/federal_register/code_of_federal_regulations/ibr_locations.html.*

(b) The incorporated material is available as follows:

(1) Drawing number 92041–001, ''Head Form Assembly,'' (November 30, 1992); drawing number 92041–002, ''Skull Assembly,'' (November 30, 1992); drawing number 92041–003, ''Skull Cap Plate Assembly,'' (November 30, 1992); drawing number 92041–004, ''Skull Cap Plate,'' (November 30, 1992); drawing number 92041–005, ''Threaded Pin,'' (November 30, 1992); drawing number 92041–006, ''Hex Nut,'' (November 30, 1992); drawing number 92041–008, ''Head Skin without Nose,'' (November 30, 1992, as amended March 6, 1995); drawing number 92041–009, ''Six-Axis Load Cell Simulator Assembly,'' (November 30, 1992); drawing number 92041–011, ''Head Ballast Weight,'' (November 30, 1992); drawing number 92041–018, ''Head Form Bill of Materials,'' (November 30, 1992); drawing number 78051–148, ''Skull-Head (cast) Hybrid III,'' (May 20, 1978, as amended August 17, 1978); drawing number 78051–228/78051–229, ''Skin- Hybrid III,'' (May 20, 1978, as amended through September 24, 1979); drawing number 78051–339, ''Pivot Pin-Neck Transducer,'' (May 20, 1978, as amended May 14, 1986); drawing number 78051–372, ''Vinyl Skin Formulation Hybrid III,'' (May 20, 1978); and drawing number C–1797, ''Neck Blank, (August 1, 1989); drawing number SA572–S4, ''Accelerometer Specification,'' (November 30, 1992), are available from Reprographic Technologies, 1111 14th Street, N.W., Washington, DC 20005.

(2) A user's manual entitled ''Free-Motion Headform User's Manual,'' version 2, March 1995, is available from NHTSA's Docket Section at the address in paragraph (a) of this section.

(3) SAE Recommended Practice J211, OCT 1988, ''Instrumentation for Impact Tests,'' Class 1000, is available from The Society of Automotive Engineers, Inc., 400 Commonwealth Drive, Warrendale, PA 15096.

§572.101 General description.

(a) The free motion headform consists of the component assembly which is shown in drawings 92041–001 (incorporated by reference; see §572.100), 92041–002 (incorporated by reference;

see § 572.100), 92041–003 (incorporated by reference; see § 572.100), 92041–004 (incorporated by reference; see § 572.100), 92041–005 (incorporated by reference; see § 572.100), 92041–006 (incorporated by reference; see § 572.100), 92041–008 (incorporated by reference; see § 572.100), 92041–009 (incorporated by reference; see § 572.100), 92041–011 (incorporated by reference; see § 572.100), 78051–148 (incorporated by reference; see § 572.100), 78051–228/78051–229 (incorporated by reference; see § 572.100), 78051–339 (incorporated by reference; see § 572.100), 78051–372 (incorporated by reference; see § 572.100), C–1797 (incorporated by reference; see § 572.100), and SA572–S4 (incorporated by reference; see § 572.100).

(b) Disassembly, inspection, and assembly procedures, and sign convention for the signal outputs of the free motion headform accelerometers, are set forth in the Free-Motion Headform User's Manual (incorporated by reference; see § 572.100).

(c) The structural properties of the headform are such that it conforms to this part in every respect both before and after being used in the test specified in Standard No. 201 of this chapter (§ 571.201).

(d) The outputs of accelerometers installed in the headform are recorded in individual data channels that conform to the requirements of SAE Recommended Practice J211, OCT 1988, ''Instrumentation for Impact Tests,'' Class 1000 (incorporated by reference; see § 572.100).

§ 572.102 Drop test.

(a) When the headform is dropped from a height of 14.8 inches in accordance with paragraph (b) of this section, the peak resultant accelerations at the location of the accelerometers mounted in the headform as shown in drawing 92041–001 (incorporated by reference; see § 572.100) shall not be less than 225g, and not more than 275g. The acceleration/time curve for the test shall be unimodal to the extent that oscillations occurring after the main acceleration pulse are less than ten percent (zero to peak) of the main pulse. The lateral acceleration vector shall not exceed 15g (zero to peak).

(b) *Test procedure.* (1) Soak the headform in a test environment at any temperature between 19 degrees C. to 26 degrees C. and at a relative humidity from 10 percent to 70 percent for a period of at least four hours prior to its use in a test.

(2) Clean the headform's skin surface and the surface of the impact plate with 1,1,1 Trichloroethane or equivalent.

(3) Suspend the headform, as shown in Figure 50. Position the forehead below the chin such that the skull cap plate is at an angle of 28.5 ±0.5 degrees with the impact surface when the midsagittal plane is vertical.

(4) Drop the headform from the specified height by means that ensure instant release onto a rigidly supported flat horizontal steel plate, which is 2 inches thick and 2 feet square. The plate shall have a clean, dry surface and any microfinish of not less than 8 microinches 203.2×10^{-6} mm (rms) and not more than 80 microinches 2032×10^{-6} mm (rms).

(5) Allow at least 3 hours between successive tests on the same headform.

§ 572.103 Test conditions and instrumentation.

(a) Headform accelerometers shall have dimensions, response characteristics, and sensitive mass locations specified in drawing SA572–S4 (incorporated by reference; see § 572.100) and be mounted in the headform as shown in drawing 92041–001 (incorporated by reference; see § 572.100).

(b) The outputs of accelerometers installed in the headform are recorded in individual data channels that conform to the requirements of SAE Recommended Practice J211, OCT 1988, ''Instrumentation for Impact Tests,'' Class 1000 (incorporated by reference; see § 572.100).

(c) Coordinate signs for instrumentation polarity conform to the sign convention shown in the Free-Motion Headform User's Manual (incorporated by reference; see § 572.100).

(d) The mountings for accelerometers shall have no resonant frequency within a range of 3 times the frequency range of the applicable channel class.

Figure 50

HEADFORM DROP TEST
Set-Up Specifications

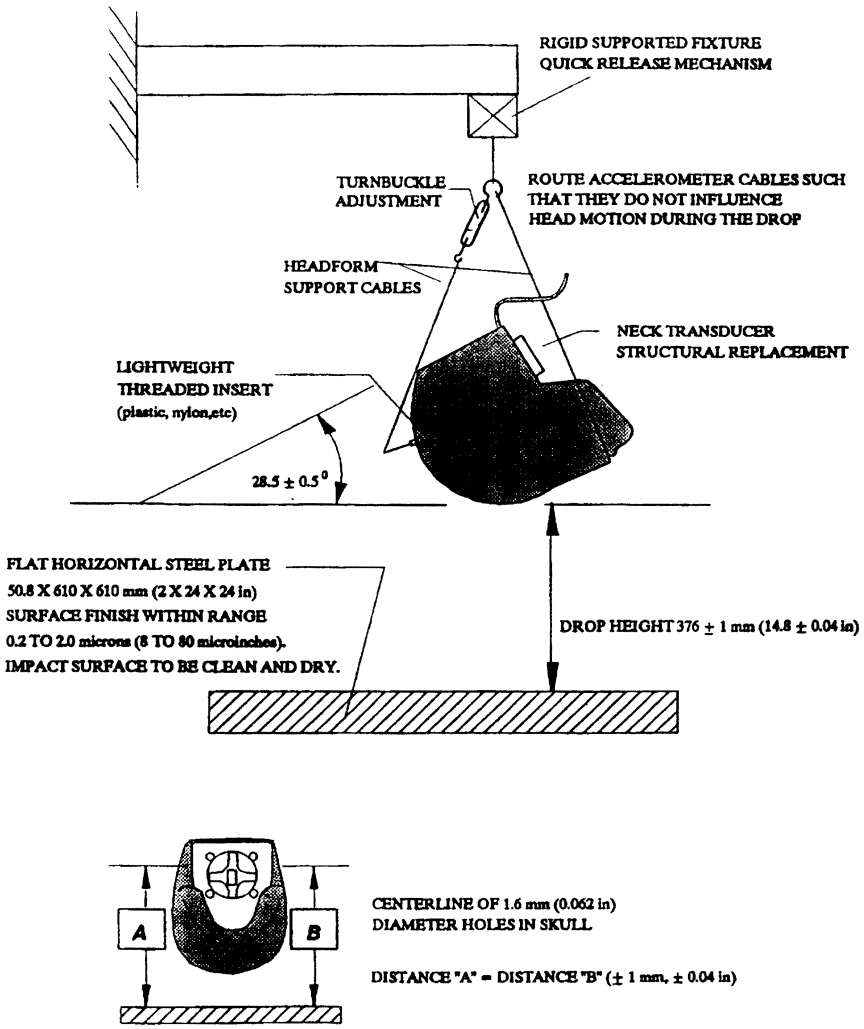

[60 FR 43060, Aug. 18, 1995]

Subpart M—Side Impact Hybrid Dummy 50th Percentile Male

SOURCE: 63 FR 41470, Aug. 4, 1998, unless otherwise noted.

§ 572.110 Materials incorporated by reference.

(a) The following materials are hereby incorporated by reference in Subpart M:

(1) The Anthropomorphic Test Dummy Parts List, SID/Hybrid III part 572, subpart M, dated May 10, 1997.

(2) The SID/Hybrid III Part 572 Subpart M User's Manual, dated May 1997.

(3) Drawing number 96–SIDH3–001, titled, ''Head-Neck Bracket,'' dated August 30, 1996.

(4) Drawing number 96–SIDH3–006, titled, ''Upper and Middle Shoulder Foam,'' dated May 10, 1997.

(5) Drawing number SA-SIDH3-M001, titled, ''Complete Assembly SIDH3,'' dated April 19, 1997.

(6) Drawing number 78051–61X, Revision C, titled ''Head Assembly—complete,'' dated March 28, 1997

(7) Drawing number 78051–90, Revision A, titled ''Neck Assembly—complete,'' dated May 20, 1978.

(8) Dummy assembly drawing number SA-SID-M030, Revision A, titled ''Thorax Assembly—complete,'' dated May 18, 1994.

(9) Dummy assembly drawing SA-SID-M050, revision A, titled ''Lumbar Spine Assembly,'' dated May 18, 1994.

(10) Dummy assembly drawing SA–150 M060, revision A, titled ''Pelvis and Abdomen Assembly,'' dated May 18, 1994.

(11) Dummy assembly drawing SA-SID-053, revision A, titled ''Lumbar Spine Assembly,'' dated May 18, 1994.

(12) Dummy assembly drawing SA-SID-M080, titled ''Leg Assembly, Right,'' dated August 13, 1987.

(13) Dummy assembly drawing SA-SID-M081, titled ''Leg Assembly, Left,'' dated August 13, 1987.

(14) Drawing number 78051–383X, Revision P, titled ''Neck Transducer Structural Replacement,'' dated November 1, 1995.

(15) The Society of Automotive Engineers (SAE) J1733 Information Report, titled ''Sign Convention for Vehicle Crash Testing,'' dated December 1994.

(16) SAE Recommended Practice J211, ''Instrumentation for Impact Tests,'' Parts 1 and 2, dated March 1995.

(b) The incorporated materials are available as follows:

(1) The Director of the Federal Register approved those materials incorporated by reference in accordance with 5 U.S.C. 552(a) and 1 CFR part 51. Copies of the materials may be inspected at NHTSA's Docket Section, 400 Seventh Street S.W., room 5109, Washington, DC, or at the National Archives and Records Administration (NARA). For information on the availability of this material at NARA, call 202–741–6030, or go to: *http://www.archives.gov/federal_register/code_of_federal_regulations/ibr_locations.html.*

(2) The parts lists, user's manual and drawings referred to in paragraphs (a)(1) through (a)(14) of this section are available from Reprographic Technologies, 9000 Virginia Manor Road, Beltsville, MD 20705 (301) 419–5070.

(3) The SAE materials referred to in paragraphs (a)(15) and (a)(16) of this section are available from the Society of Automotive Engineers, Inc., 400 Commonwealth Drive, Warrendale, PA 15096.

§ 572.111 General description.

(a) The dummy consists of component parts and component assemblies defined in drawing SA-SIDH3-M001, dated April 19, 1997, which are described in approximately 200 drawings and specifications that are set forth in §§ 572.32, 572.33 and 572.41(a)(3),(4),(5) and (6) of this part, and in the drawing of the Adaptor Bracket 96–SIDH3–001.

(1) The head assembly consists of the assembly specified in subpart E (§ 572.32) and conforms to each of the drawings subtended under drawing 78051–61X rev. C.

(2) The neck assembly consists of the assembly specified in subpart E (§ 572.33) and conforms to each of the drawings subtended under drawing 78051–90 rev. A.

(3) The thorax assembly consists of the assembly shown as number SID 053 and conforms to each applicable drawing subtended by number SA-SID M030 rev. A.

(4) The lumbar spine consists of the assembly specified in subpart B (§572.9(a)) and conforms to drawing SA 150 M050 and drawings subtended by SA-SID M050 rev. A.

(5) The abdomen and pelvis consist of the assembly and conform to the drawings subtended by SA 150 M060, the drawings subtended by SA 150 M060 rev. A and the drawings subtended by SA-SID-087 sheet 1 rev. H, and SA-SID-87 sheet 2 rev. H.

(6) The lower limbs consist of the assemblies specified in Subpart B (§572.10) shown as SA 150 M080 and SA 150 M081 in Figure 1 and SA-SID-M080 and SA-SID-M081 and conform to the drawings subtended by those numbers.

(7) The neck mounting adaptor bracket conforms to drawing 96–SIDH3–001.

(8) Upper and middle shoulder foams conform to drawing 96–SIDH3–006.

(b) The structural properties of the dummy are such that the dummy conforms to the specifications of this subpart in every respect before being used in vehicle tests specified in Standard 201.

(c) Disassembly, inspection and assembly procedures, external dimensions, weight and drawing list are set forth in the SIDH3 User's Manual, dated May 1997.

(d) Sign convention for signal outputs is given in the reference document SAE J1733 of 1994–12, ''Sign Convention for Vehicle Crash Testing.''

§572.112 Head assembly.

The head assembly consists of the head (drawing 78051–61X, rev. C) with the neck transducer structural replacement (drawing 78051–383X, rev. P) and three (3) accelerometers that are mounted in conformance to §572.36 (c).

(a) Test procedure. (1) Soak the head assembly in a test environment at any temperature between 18.9 and 25.6 degrees C. (66 to 78 degrees F.) and at a relative humidity between 10 percent and 70 percent for a period of at least four (4) hours prior to its application in a test.

(2) Clean the impact surface of the head skin and impact plate surface, described in paragraph (a)(4) of this section, with 1,1,1 trichloroethane or equivalent prior to the test.

(3) Suspend the head, as shown in Figure 51, so that the midsagittal plane makes an angle of 35 ±1 degrees with the impact surface and its anterior-posterior axis is horizontal ±1 degree.

(4) Drop the head from a height of 200 ±0.25 mm (7.87 ±0.01 inches), measured from the lowest point on the head, by a means that ensures a smooth, clean release into a rigidly supported flat horizontal steel plate, which is 51 ±2 mm (2.0 ±0.01 in.) thick and 610 ±10 mm (24.0 ±0.4 in) square. The plate shall have a dry surface and shall have a microfinish of 0.2 microns (8 microinches) to 2.0 microns (80 microinches).

(5) Allow at least two (2) hours between successive tests on the same head.

(b) Performance criteria. (1) When the head assembly is dropped in accordance with §572.112(a), the measured peak resultant acceleration shall be between 120 and 150 G's.

(2) The resultant acceleration-time curve shall be unimodal to the extent that oscillations occurring after the main acceleration pulse shall not exceed 15 percent (zero to peak) of the main pulse. The longitudinal acceleration vector shall not exceed 15 G's.

Figure 51

HEAD DROP TEST

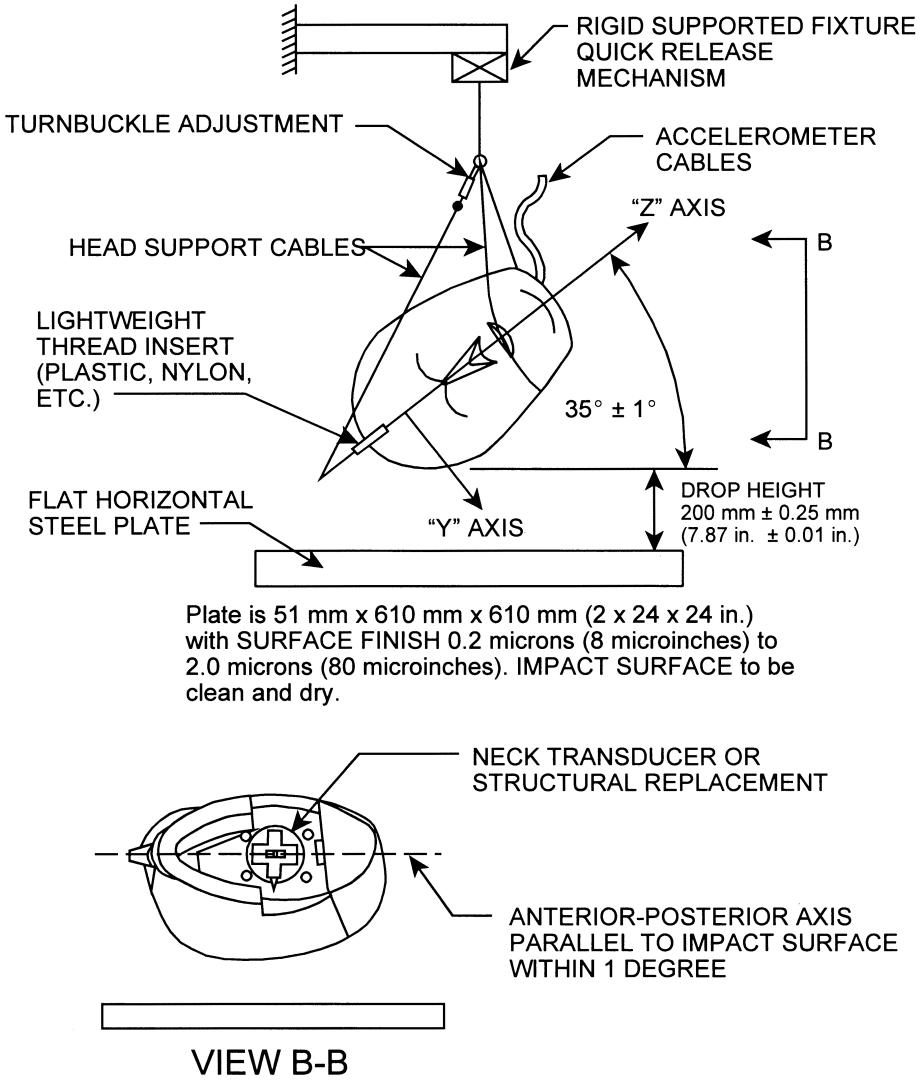

§572.113 Neck assembly.

The head/neck assembly consists of the parts 78051–61X, rev. C; –84; –90, rev. A; –94; –98; –104, revision F; –303, rev. E;—305; –306; –307, rev. X and has a six axis neck transducer (drawing C–1709, revision D) installed in conformance with §572.36(d).

(a) Test procedure. (1) Soak the head and neck assembly in a test environment at any temperature between 20.6 and 22.2 degrees C. (69 to 72 degrees F.) and at any relative humidity between 10 percent and 70 percent for a period of at least four (4) hours prior to its application in a test.

(2) Torque the jamnut (78051–64) on the neck cable (78051–301, rev. E) to 1.35 ±0.27 Nm (1.0 ±0.2 ft-lb) before each test.

(3) Using neck brackets 78051–303 and –307, mount the head/neck assembly to the part 572 pendulum test fixture (see § 572.33, Figure 22,) so that the midsagittal plane of the head is vertical and perpendicular to the plane of motion of the pendulum's longitudinal centerline (see § 572.33, Figure 20, except that the direction of the head/neck assembly is rotated around the superior-inferior axis by an angle of 90 degrees). Install suitable transducers or other devices necessary for measuring the ''D'' plane (horizontal surface at the base of the skull) rotation with respect to the pendulum's longitudinal centerline. The rotation can be measured by placing a transducer at the occipital condyles and another at the intersection of the centerline of the neck and the line extending from the base of the neck as shown in figure 52.

(4) Release the pendulum and allow it to fall freely from a height to achieve an impact velocity of 6.89 to 7.13 m/s (22.6 to 23.4 ft/sec) measured at the center of the pendulum accelerometer.

(5) Allow the neck to flex without the head or neck contacting any object during the test.

(6) Time zero is defined as the time of initial contact between the striker plate and the pendulum deceleration medium.

(7) Allow a period of at least thirty (30) minutes between successive tests on the same neck assembly.

(b) Performance criteria. (1) The pendulum deceleration pulse is to be characterized in terms of decrease in velocity as obtained by integrating the pendulum acceleration output.

Time (ms)	Pendulum Delta-V (m/s)
10	1.96 to 2.55.
20	4.12 to 5.10.
30	5.73 to 7.01.
40 to 70	6.27 to 7.64.

(2) The maximum rotation of the midsagittal plane of the head shall be 66 to 82 degrees with respect to the pendulum's longitudinal centerline. The decaying head rotation vs. time curve shall cross the zero angle between 58 to 67 ms after reaching its peak value.

(3) The moment about the x-axis which coincides with the midsagittal plane of the head at the level of the occipital condyles shall have a maximum value between 73 and 88 Nm. The decaying moment vs. time curve shall first cross zero moment between 49 and 64 ms after reaching its peak value. The following formula is to be used to calculate the moment about the occipital condyles when using the six-axis neck transducer:

$$M = Mx + 0.01778\ Fy$$

Where Mx and Fy are the moment and force measured by the transducer and expressed in terms of Nm and N, respectively.

(4) The maximum rotation of the head with respect to the pendulum's longitudinal centerline shall occur between 2 and 16 ms after peak moment.

[63 FR 41470, Aug. 4, 1998, as amended at 66 FR 51882, Oct. 11, 2001]

§ 572.114 Thorax.

The specifications and test procedure for the thorax for the SID/HIII dummy are identical to those applicable to the SID dummy as set forth in § 572.42 except that the reference to the SID device found in § 572.42(a), (SA-SID-M001A revision A, dated May 18, 1994) does not apply and the reference to the SID/HIII (SA-SIDH3-M001, dated April 19, 1997) is applied in its place.

Figure 52

NECK PENDULUM TEST

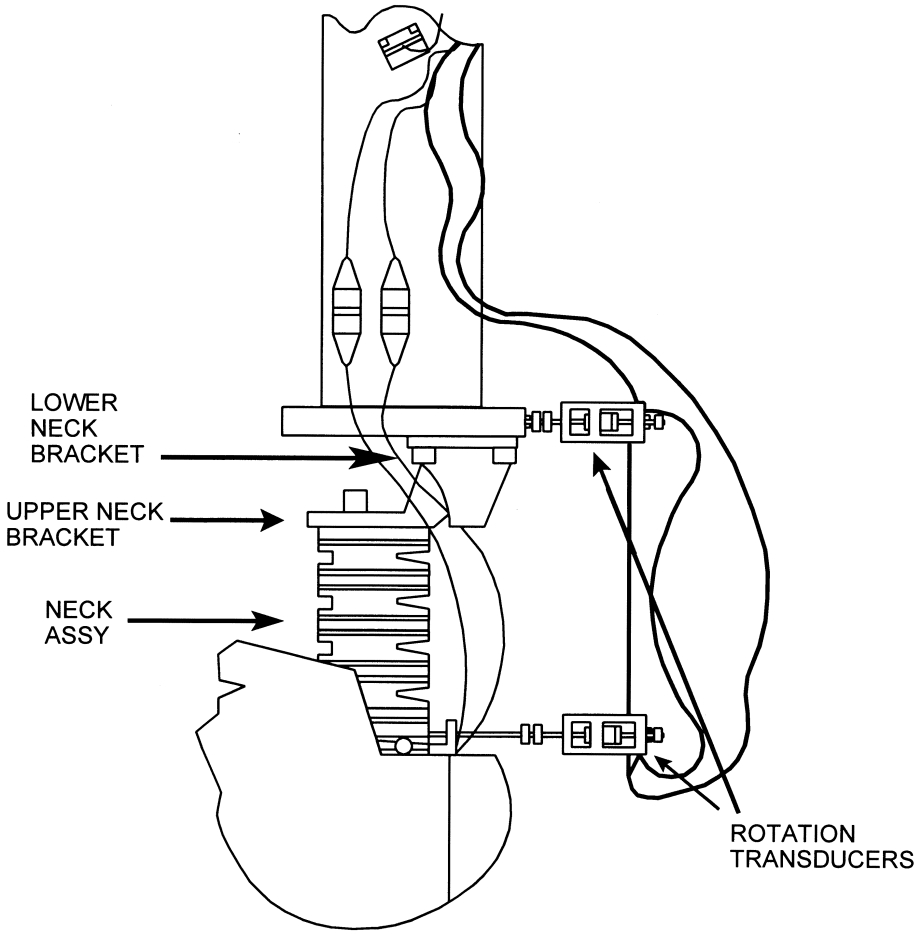

§ 572.115 Lumbar spine and pelvis.

The specifications and test procedure for the lumbar spine and pelvis are identical to those for the SID dummy as set forth in § 572.42 except that the reference to the SID device found in § 572.42(a), (SA-SID-M001A revision A, dated May 18, 1994) does not apply and the reference to the SID/HIII (SA-SIDH3-M001, dated April 19, 1997) is applied in its place.

§ 572.116 Instrumentation and test conditions.

(a) The test probe for lateral thoracic and pelvis impact tests are the same as those specified in § 572.44(a).

(b) Accelerometer mounting in the thorax is the same as specified in § 572.44(b).

(c) Accelerometer mounting in the pelvis is the same as specified in § 572.44(c).

(d) Head accelerometer mounting is the same as specified in § 572.36(c).

(e) Neck transducer mounting is the same as specified in § 572.36(d).

(f) Instrumentation and sensors used must conform to SAE Recommended Practice J211, March 1995, ''Instrumentation for Impact Tests.''

(g) The mountings for the spine, rib and pelvis accelerometers shall have no resonance frequency within a range of 3 times the frequency range of the applicable channel class.

(h) Limb joints of the test dummy shall be set at the force between 1 to 2 g's, which just supports the limb's weight when the limbs are extended horizontally forward. The force required to move a limb segment does not exceed 2 g's throughout the range of the limb motion.

(i) Performance tests must be conducted at a temperature between 20.6 and 22.2 degrees C. (69 to 72 degrees F.) and at a relative humidity between 10 percent and 70 percent after exposure of the dummy to those conditions for a period of at least four (4) hours.

(j) For the performance of tests specified in § 572.114 and § 572.115, the dummy is positioned the same as specified in § 572.44(h).

Subpart N—Six-year-old Child Test Dummy, Beta Version

SOURCE: 65 FR 2065, Jan. 13, 2000, unless otherwise noted.

§ 572.120 Incorporation by reference.

(a) The following materials are hereby incorporated into this subpart by reference:

(1) A drawings and inspection package entitled ''Parts List and Drawings, Hybrid III Six-year-old Child Test Dummy (H-III6C, Beta Version) (June 2002)'', consisting of:

(i) Drawing No. 127–1000, 6-year H3 Head Complete,

(ii) Drawing No. 127–1015, Neck Assembly,

(iii) Drawing No. 127–2000, Upper Torso Assembly,

(iv) Drawing No. 127–3000, Lower Torso Assembly,

(v) Drawing No. 127–4000–1 and 4000–2, Leg Assembly,

(vi) Drawing No. 127–5000–1 and 5000–2, Arm Assembly, and

(vii) The Hybrid III Six-year-old Child Parts/Drawing List.

(2) A procedures manual entitled ''Procedures for Assembly, Disassembly, and Inspection (PADI) of the Hybrid III 6-year-old Child Crash Test Dummy (H-III6C), Beta Version, June 2002'';

(3) SAE Recommended Practice J211–1995 Instrumentation for Impact Tests—Parts 1 and 2, dated March, 1995'';

(4) SAE J1733 Information Report, titled ''Sign Convention for Vehicle Crash Testing'', dated December 1994.

(b) The Director of the Federal Register approved those materials incorporated by reference in accordance with 5 U.S.C. 552(a) and 1 CFR part 51. Copies of the materials may be inspected at NHTSA's Technical Reference Library, 400 Seventh Street SW., room 5109, Washington, DC, or at the National Archives and Records Administration (NARA). For information on the availability of this material at NARA, call 202–741–6030, or go to: *http://www.archives.gov/federal_register/code_of_federal_regulations/ibr_locations.html.*

(c) The incorporated materials are available as follows:

(1) The drawings and specifications package and the PADI document referred to in subparagraph (a) are accessible for viewing and copying at the Department of Transportation Docket's public area, Plaza 401, 400 Seventh St., SW., Washington, DC 20590, and may be downloaded from dms.dot.gov. They are also available from Reprographic Technologies, 9107 Gaither Rd, Gaithersburg, MD 200877, (301) 419–5070.

(2) The SAE materials referred to in paragraphs (a)(3) and (a)(4) of this section are available from the Society of

Automotive Engineers, Inc., 400 Commonwealth Drive, Warrendale, PA 15096.

[65 FR 2065, Jan. 13, 2000, as amended at 67 FR 47327, July 18, 2002]

§ 572.121 General description.

(a) The Hybrid III type 6-year-old dummy is defined by drawings and specifications containing the following materials:

(1) Technical drawings and specifications package P/N 127–0000, the titles of which are listed in Table A;

(2) Procedures for Assembly, Disassembly, and Inspection (PADI) of the Hybrid III 6-year-old test dummy, Alpha version (August 1999).

TABLE A

Component assembly	Drawing number
Head assembly	127–1000
Neck assembly	127–1015
Upper torso assembly	127–2000
Lower torso assembly	127–3000
Leg assembly	127–4000
Arm assembly	127–5000

(b) Adjacent segments are joined in a manner such that except for contacts existing under static conditions, there is no contact between metallic elements throughout the range of motion or under simulated crash impact conditions.

(c) The structural properties of the dummy are such that the dummy must conform to this Subpart in every respect before use in any test similar to those specified in Standard 208, ''Occupant Crash Protection'', and Standard 213, ''Child Restraint Systems''.

§ 572.122 Head assembly and test procedure.

(a) The head assembly for this test consists of the complete head (drawing 127–1000), a six-axis neck transducer (drawing SA572–S11) or its structural replacement (drawing 78051–383X), a head to neck-to-pivot pin (drawing 78051–339), and 3 accelerometers (drawing SA572–S4).

(b) When the head assembly in paragraph (a) of this section is dropped from a height of 376.0 ±1.0 mm (14.8 ±0.04 in) in accordance with paragraph (c) of this section, the peak resultant acceleration at the location of the accelerometers at the head CG may not be less than 245 G or more than 300 G. The resultant acceleration vs. time history curve shall be unimodal; oscillations occurring after the main pulse must be less than 10 percent of the peak resultant acceleration. The lateral acceleration shall not exceed 15 g's (zero to peak).

(c) *Head test procedure*. The test procedure for the head is as follows:

(1) Soak the head assembly in a controlled environment at any temperature between 18.9 and 25.6 °C (66 and 78 °F) and a relative humidity from 10 to 70 percent for at least four hours prior to a test.

(2) Prior to the test, clean the impact surface of the skin and the impact plate surface with isopropyl alcohol, trichloroethane, or an equivalent. The skin of the head must be clean and dry for testing.

(3) Suspend the head assembly as shown in Figure N1. The lowest point on the forehead must be 376.0 ±1.0 mm (14.8 ±0.04 in) from the impact surface and the head must be oriented to an incline of 62 ±1 deg. between the ''D'' plane as shown in Figure N1 and the plane of the impact surface. The 1.57 mm (0.062 in) diameter holes located on either side of the dummy's head shall be used to ensure that the head is level with respect to the impact surface.

(4) Drop the head assembly from the specified height by means that ensure a smooth, instant release onto a rigidly supported flat horizontal steel plate which is 50.8 mm (2 in) thick and 610 mm (24 in) square. The impact surface shall be clean, dry and have a micro finish of not less than $203.2. \times 10^{-6}$ mm (8 micro inches) (RMS) and not more than 2032.0×10^{-6} mm (80 micro inches) (RMS).

(5) Allow at least 2 hours between successive tests on the same head.

§ 572.123 Neck assembly and test procedure.

(a) The neck assembly for the purposes of this test consists of the assembly of components shown in drawing 127–1015.

(b) When the head-neck assembly consisting of the head (drawing 127–1000), neck (drawing 127–1015), pivot pin (drawing 78051–339), bib simulator

(drawing TE127–1025, neck bracket assembly (drawing 127–8221), six-axis neck transducer (drawing SA572–S11), neck mounting adaptor (drawing TE–2208–001), and three accelerometers (drawing SA572–S4) installed in the head assembly as specified in §572.122, is tested according to the test procedure in paragraph (c) of this section, it shall have the following characteristics:

(1) *Flexion*. (i) Plane D, referenced in Figure N2, shall rotate in the direction of preimpact flight with respect to the pendulum's longitudinal centerline between 74 degrees and 92 degrees. Within this specified rotation corridor, the peak moment about the occipital condyles shall be not less than 27 N-m (19.9 ft-lbf) and not more than 33 N-m (24.3 ft-lbf).

(ii) The positive moment shall decay for the first time to 5 N-m (3.7 ft-lbf) between 103 ms and 123 ms.

(iii) The moment shall be calculated by the following formula: Moment (N-m) = $M_y - (0.01778m) \times (F_X)$.

(iv) M_y is the moment about the y-axis and F_X is the shear force measured by the neck transducer (drawing SA572–S11) and 0.01778m is the distance from force to occipital condyle.

(2) *Extension*. (i) Plane D, referenced in Figure N3, shall rotate in the direction of preimpact flight with respect to the pendulum's longitudinal centerline between 85 degrees and 103 degrees. Within this specified rotation corridor, the peak moment about the occipital condyles shall be not more than −19 N-m (−14 ft-lbf) and not less than −24 N-m (−17.7ft-lbf).

(ii) The negative moment shall decay for the first time to −5 N-m (−3.7 ft-lbf) between 123 ms and 147 ms.

(iii) The moment shall be calculated by the following formula: Moment (N-m)=$M_y - (0.01778m) \times (F_X)$.

(iv) M_y is the moment about the y-axis and F_X is the shear force measured by the neck transducer (drawing SA572–S11) and 0.017778m is the distance from force to occipital condyle.

(3) Time-zero is defined as the time of initial contact between the pendulum striker plate and the honeycomb material.

(c) *Test procedure*. The test procedure for the neck assembly is as follows:

(1) Soak the neck assembly in a controlled environment at any temperature between 20.6 and 22.2 °C (69 and 72 °F) and a relative humidity between 10 and 70 percent for at least four hours prior to a test.

(2) Torque the jam nut (drawing 9000341) on the neck cable (drawing 127–1016) to 0.23 ±0.02 N-m (2.0 ±0.2 in-lbs).

(3) Mount the head-neck assembly, defined in paragraph (b) of this section, on the pendulum so the midsagittal plane of the head is vertical and coincides with the plane of motion of the pendulum as shown in Figure N2 for flexion tests and Figure N3 for extension tests.

(4) Release the pendulum and allow it to fall freely from a height to achieve an impact velocity of 4.95 ±0.12 m/s (16.2 ±0.4 ft/s) for flexion tests and 4.3 ±0.12 m/s (14.10 ±0.40 ft/s) for extension tests, measured by an accelerometer mounted on the pendulum as shown in Figure 22 of 49 CFR 572 at the instant of contact with the honey comb.

(i) Time-zero is defined as the time of initial contact between the pendulum striker plate and the honeycomb material. All data channels should be at the zero level at this time.

(ii) Stop the pendulum from the initial velocity with an acceleration vs. time pulse which meets the velocity change as specified below. Integrate the pendulum acceleration data channel to obtain the velocity vs. time curve:

TABLE B

Time	Pendulum pulse			
ms	Flexion		Extension	
	m/s	ft/s	m/s	ft/s
10	1.2–1.6	3.9–5.3	1.0–1.4	3.3–4.6
20	2.4–3.4	7.9–11.2	2.2–3.0	7.2–9.8
30	3.8–5.0	12.5–16.4	3.2–4.2	10.5–13.8

§ 572.124 Thorax assembly and test procedure.

(a) *Thorax (upper torso) assembly*. The thorax consists of the part of the torso assembly shown in drawing 127–2000.

(b) When the anterior surface of the thorax of a completely assembled dummy (drawing 127–0000) is impacted by a test probe conforming to section 572.127(a) at 6.71 ±0.12 m/s (22.0 ±0.4 ft/s) according to the test procedure in paragraph (c) of this section:

(1) The maximum sternum displacement (compression) relative to the spine, measured with chest deflection transducer (drawing SA572-S50), must be not less than 38.0 mm (1.50 in) and not more than 46.0 mm (1.80 in). Within this specified compression corridor, the peak force, measured by the probe in accordance with section 572.127, shall not be less than 1150 N (259 lbf) and not more than 1380 N (310 lbf). The peak force after 12.5 mm (0.5 in) of sternum displacement but before reaching the minimum required 38.0 mm (1.5 in) sternum displacement limit shall not exceed 1500 N (337.2 lbf).

(2) The internal hysteresis of the ribcage in each impact as determined by the plot of force vs. deflection in paragraph (b)(1) of this section shall be not less than 65 percent but not more than 85 percent.

(c) *Test procedure*. The test procedure for the thorax assembly is as follows:

(1) Soak the dummy in a controlled environment at any temperature between 20.6° and 22.2 °C (69° and 72 °F) and a relative humidity between 10 and 70 percent for at least four hours prior to a test.

(2) Seat and orient the dummy, wearing tight-fitting underwear or equivalent consisting of a size 5 short-sleeved shirt having a weight less than 0.090 kg (0.2 lb) and an opening at the top just large enough to permit the passage of the head with a tight fit, and a size 4 pair of long pants having a weight of less than 0.090 kg (0.2 lb) with the legs cut off sufficiently above the knee to allow the knee target to be visible, on a seating surface without back support as shown in Figure N4, with the limbs extended horizontally and forward, parallel to the midsagittal plane, the midsagittal plane vertical within ±1 degree and the ribs level in the anterior-posterior and lateral directions within ±0.5 degrees.

(3) Establish the impact point at the chest midsagittal plane so that the impact point of the longitudinal centerline of the probe coincides with the midsagittal plane of the dummy within ±2.5 mm (0.1 in) and is 12.7 ±1.1 mm (0.5 ±0.04 in) below the horizontal-peripheral centerline of the No. 3 rib and is within 0.5 degrees of a horizontal line in the dummy's midsagittal plane.

(4) Impact the thorax with the test probe so that at the moment of contact the probe's longitudinal center line falls within 2 degrees of a horizontal line in the dummy's midsagittal plane.

(5) Guide the test probe during impact so that there is no significant lateral, vertical or rotational movement.

(6) No suspension hardware, suspension cables, or any other attachments to the probe, including the velocity vane, shall make contact with the dummy during the test.

[65 FR 2065, Jan. 13, 2000, as amended at 67 FR 47327, July 18, 2002]

§ 572.125 Upper and lower torso assemblies and torso flexion test procedure.

(a) *Upper/lower torso assembly*. The test objective is to determine the stiffness effects of the lumbar spine (drawing 127–3002), including cable (drawing 127–8095), mounting plate insert (drawing 910420–048), nylon shoulder bushing (drawing 9001373), nut (drawing 9001336), and abdominal insert (drawing 127–8210), on resistance to articulation between upper torso assembly (drawing 127–2000) and lower torso assembly (drawing 127–3000).

(b)(1) When the upper torso assembly of a seated dummy is subjected to a force continuously applied at the head to neck pivot pin level through a rigidly attached adaptor bracket as shown in Figure N5 according to the test procedure set out in paragraph (c) of this section, the lumbar spine-abdomen assembly shall flex by an amount that permits the upper torso assembly to translate in angular motion until the machined rear surface of the instrument cavity at the back of the thoracic spine box is at 45 ±0.5 degrees relative to the vertical transverse plane, at which time the force applied as shown

in Figure N5 must be not less than 147 N (33 lbf) and not more than 200 N (45 lbf), and

(2) Upon removal of the force, the torso assembly must return to within 8 degrees of its initial position.

(c) *Test procedure*. The test procedure for the torso assemblies is as follows:

(1) Soak the dummy in a controlled environment at any temperature between 18.9 and 25.6 °C (66 and 78 °F) and a relative humidity between 10 and 70 percent for at least four hours prior to a test.

(2) Attach the dummy (with or without the legs below the femurs) to the fixture in a seated posture as shown in Figure N5.

(3) Secure the pelvis at the pelvis instrument cavity rear face by threading four ¼ in cap screws into the available threaded attachment holes. Tighten the mountings so that the test material is rigidly affixed to the test fixture and the pelvic-lumbar joining surface is horizontal.

(4) Flex the thorax forward three times between vertical and until the torso reference plane, as shown in figure N5, reaches 30 ±2 degrees from vertical. Bring the torso to vertical orientation, remove all externally applied flexion forces, and wait 30 minutes before conducting the test. During the 30-minute waiting period, the dummy's upper torso shall be externally supported at or near its vertical orientation to prevent sagging.

(5) Remove the external support and wait two minutes. Measure the initial orientation of the torso reference plane of the seated, unsupported dummy as shown in Figure N5. This initial torso orientation angle may not exceed 22 degrees.

(6) Attach the loading adapter bracket to the spine of the dummy, the pull cable, and the load cell as shown in Figure N5.

(7) Apply a tension force in the midsagittal plane to the pull cable as shown in Figure N5 at any upper torso deflection rate between 0.5 and 1.5 degrees per second, until the torso reference plane is at 45 ±0.5 degrees of flexion relative to the vertical transverse plane as shown in Figure N5.

(8) Continue to apply a force sufficient to maintain 45 ±0.5 degrees of flexion for 10 seconds, and record the highest applied force during the 10-second period.

(9) Release all force as rapidly as possible, and measure the return angle at 3 minutes or any time thereafter after the release.

§ 572.126 Knees and knee impact test procedure.

(a) *Knee assembly*. The knee assembly is part of the leg assembly (drawing 127–4000–1 and –2).

(b) When the knee assembly, consisting of knee machined (drawing 127–4013), knee flesh (drawing 127–4011), lower leg (drawing 127–4014), the foot assembly (drawing 127–4030–1(left) and -2 (right)) and femur load transducer (drawing SA572-S10) or its structural replacement (drawing 127–4007) is tested according to the test procedure in section 572.127(c), the peak resistance force as measured with the test probe mounted accelerometer must be not less than 2.0 kN (450 lbf) and not more than 3.0 kN (674 lbf).

(c) *Test procedure*. The test procedure for the knee assembly is as follows:

(1) Soak the knee assembly in a controlled environment at any temperature between 18.9 and 25.6 °C (66 and 78 °F) and a relative humidity from 10 to 70 percent for at least four hours prior to a test.

(2) Mount the test material and secure it to a rigid test fixture as shown in Figure N6. No contact is permitted between any part of the foot or tibia and any exterior surface.

(3) Align the test probe so that throughout its stroke and at contact with the knee it is within 2 degrees of horizontal and collinear with the longitudinal centerline of the femur.

(4) Guide the pendulum so that there is no significant lateral vertical or rotational movement at time-zero.

(5) The test probe velocity at the time of contact shall be 2.1 ±0.03 m/s (6.9 # 0.1 ft/s).

(6) No suspension hardware, suspension cables, or any other attachments to the probe, including the velocity vane, shall make contact with the dummy during testing.

[65 FR 2065, Jan. 13, 2000, as amended at 67 FR 47328, July 18, 2002]

§ 572.127 Test conditions and instrumentation.

(a) The test probe for thoracic impacts, except for attachments, shall be of rigid metal or metal alloy construction and concentric about its longitudinal axis. Any attachments to the impactor, such as suspension hardware, velocity vanes, etc., must meet the requirements of § 572.124(c)(6). The impactor shall have a mass of 2.86 ±0.02 kg (6.3 ±0.05 lb) and a minimum mass moment of inertia of 160 kg-c^2 (0.141 lb-in-sec^2) in yaw and pitch about the CG of the probe. One third of the weight of suspension cables and any attachments to the impact probe must be included in the calculation of mass, and such components may not exceed five percent of the total weight of the probe. The impacting end of the probe, has a flat, continuous, and non-deformable 101.6 ±0.25 mm (4.00 ±0.01 in) diameter face with an edge radius of 7.6/12.7 mm (0.3/0.5 in). The impactor shall have a 101–103 mm (4.0–4.1 in) diameter cylindrical surface extending for a minimum of 12.5 mm (0.5 in) to the rear from the impact face. The probe's end opposite to the impact face has provisions for mounting an accelerometer with its sensitive axis collinear with the longitudinal axis of the probe. The impact probe shall have a free air resonant frequency of not less than 1000 Hz limited to the direction of the longitudinal axis of the impactor.

(b) The test probe for knee impacts, except for attachments, shall be of rigid metal or alloy construction and concentric about its longitudinal axis. Any attachments to the impactor, such as suspension hardware, velocity vanes, etc., must meet the requirements of § 572.126(c)(6). The impactor shall have a mass of 0.82 ±0.02 kg (1.8 ±0.05 lb) and a minimum mass moment of inertia of 34 kg-cm2 (0.03 lb-in-sec2) in yaw and pitch about the CG of the probe. One third of the weight of suspension cables and any attachments to the impact probe must be included in the calculation of mass, and such components may not exceed five percent of the total weight of the probe. The impacting end of the probe, has a flat, continuous, and non-deformable 76.2 ±0.2 mm (3.00 ±0.01 in) diameter face with an edge radius of 7.6/12.7 mm (0.3/0.5 in). The impactor shall have a 76–77 mm (3.0–3.1 in) diameter cylindrical surface extending for a minimum of 12.5 mm (0.5 in) to the rear from the impact face. The probe's end opposite to the impact face has provisions for mounting an accelerometer with its sensitive axis collinear with the longitudinal axis of the probe. The impact probe shall have a free air resonant frequency of not less than 1000 Hz limited to the direction of the longitudinal axis of the impactor.

(c) Head accelerometers shall have dimensions, response characteristics, and sensitive mass locations specified in drawing SA572–S4 and be mounted in the head as shown in drawing 127–0000 sheet 3.

(d) *Neck force/moment transducer*. (1) The upper neck force/moment transducer shall have the dimensions, response characteristics, and sensitive axis locations specified in drawing SA572–S11 and be mounted in the head-neck assembly as shown in drawing 127–0000 sheet 3.

(2) The optional lower neck force/moment transducer shall have the dimensions, response characteristics, and sensitive axis locations specified in drawing SA572–S26 and be mounted as shown in drawing 127–0000 sheet 3.

(e) The thorax accelerometers shall have the dimensions, response characteristics, and sensitive mass locations specified in drawing SA572–S4 and be mounted in the torso assembly in triaxial configuration at T4, and as optional instrumentation in uniaxial for-and-aft oriented configuration on the most anterior ends of ribs #1 and #6 and at the spine box at the levels of #1 and #6 ribs as shown in 127–0000 sheet 3.

(f) The chest deflection transducer shall have the dimensions and response characteristics specified in drawing SA572–S50 and be mounted in the upper torso assembly as shown in 127–0000 sheet 3.

(g) The optional lumbar spine force-moment transducer shall have the dimensions, response characteristics, and sensitive axis locations specified in drawing SA572–S12 and be mounted in the lower torso assembly as shown in drawing 127–0000 sheet 3 as a replacement for lumbar adaptor 127–3005.

(h) The optional iliac spine force transducers shall have the dimensions and response characteristics specified in drawing SA572–S13 and be mounted in the torso assembly as shown in drawing 127–0000 sheet 3 as a replacement for ASIS load cell 127–3015–1 (left) and −2 (right).

(i) The optional pelvis accelerometers shall have the dimensions, response characteristics, and sensitive mass locations specified in drawing SA572–S4 and be mounted in the torso assembly in triaxial configuration in the pelvis bone as shown in drawing 127–0000 sheet 3.

(j) The femur force transducer shall have the dimensions and response characteristics specified in drawing SA72–S10 and be mounted in the leg assembly as shown in drawing 127–0000 sheet 3.

(k) The outputs of acceleration and force-sensing devices installed in the dummy and in the test apparatus specified by this part must be recorded in individual data channels that conform to SAE Recommended Practice J211, Rev. Mar95 ''Instrumentation for lmpact Tests,'' except that the lumbar measurements are based on CFC 600, with channel classes as follows:

(1) Head acceleration—Class 1000.

(2) Neck:

(i) Forces—Class 1000;

(ii) Moments—Class 600;

(iii) Pendulum acceleration—Class 180;

(iv) Rotation—Class 60 (if used).

(3) Thorax:

(i) Rib acceleration—Class 1000;

(ii) Spine and pendulum accelerations—Class 180;

(iii) Sternum deflection—Class 600.

(4) Lumbar:

(i) Forces—Class 1000;

(ii) Moments—Class 600;

(iii) Flexion—Class 60 if data channel is used.

(5) Pelvis accelerations—Class 1000.

(6) Femur forces—Class 600.

(l) Coordinate signs for instrumentation polarity shall conform to the Sign Convention For Vehicle Crash Testing, Surface Vehicle Information Report, SAE J1733, 1994–12.

(m) The mountings for sensing devices shall have no resonance frequency less than 3 times the frequency range of the applicable channel class.

(n) Limb joints must be set at one G, barely restraining the weight of the limb when it is extended horizontally. The force needed to move a limb segment shall not exceed 2G throughout the range of limb motion.

(o) Performance tests of the same component, segment, assembly, or fully assembled dummy shall be separated in time by period of not less than 30 minutes unless otherwise noted.

(p) Surfaces of dummy components may not be painted except as specified in this subpart or in drawings subtended by this subpart.

[65 FR 2065, Jan. 13, 2000, as amended at 67 FR 47328, July 18, 2002]

FIGURES TO SUBPART N OF PART 572

Figure N 1

HEAD DROP TEST SET-UP SPECIFICATIONS

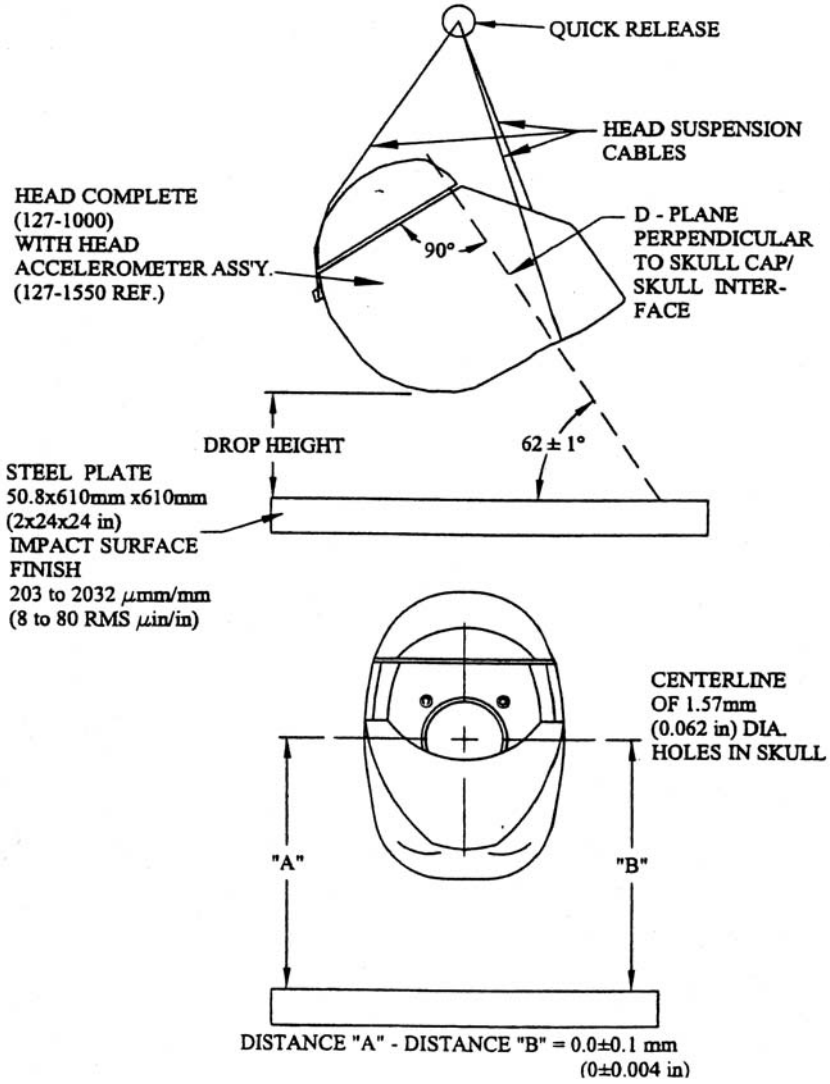

Figure N 2

NECK FLEXION TEST SET-UP SPECIFICATIONS

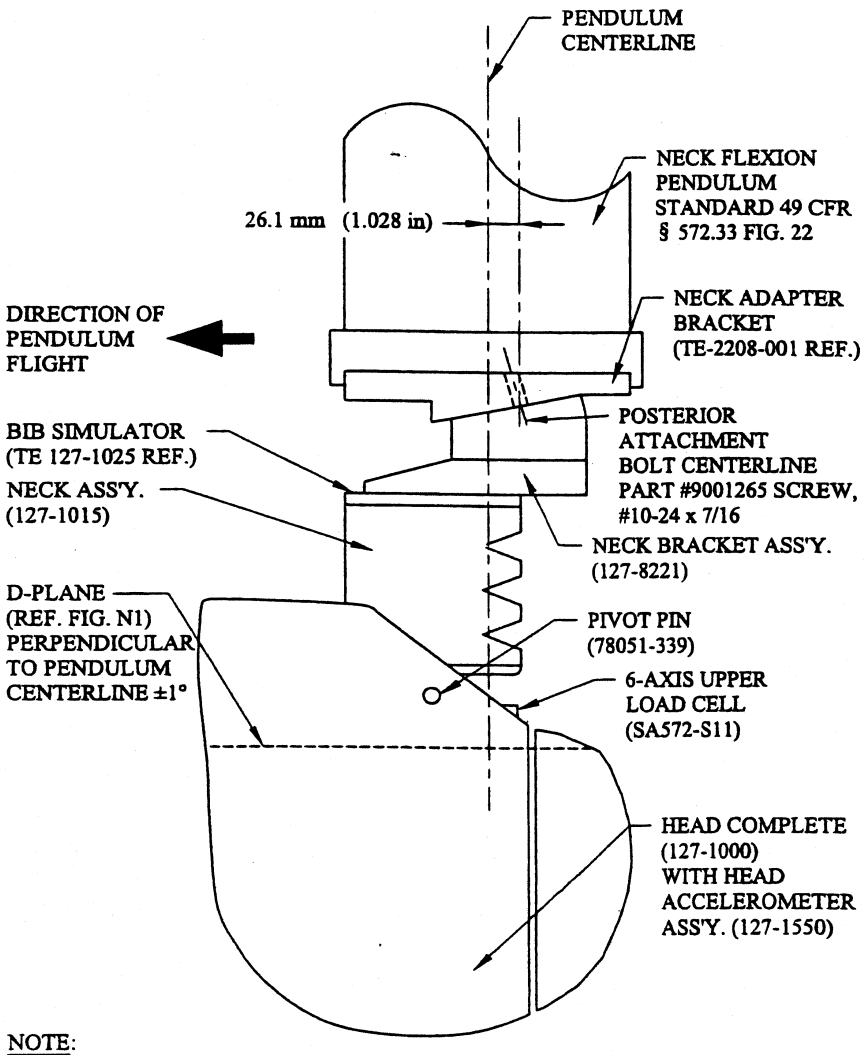

NOTE:
PENDULUM SHOWN IN VERTICAL ORIENTATION

Figure N 3

NECK EXTENSION TEST SET-UP SPECIFICATIONS

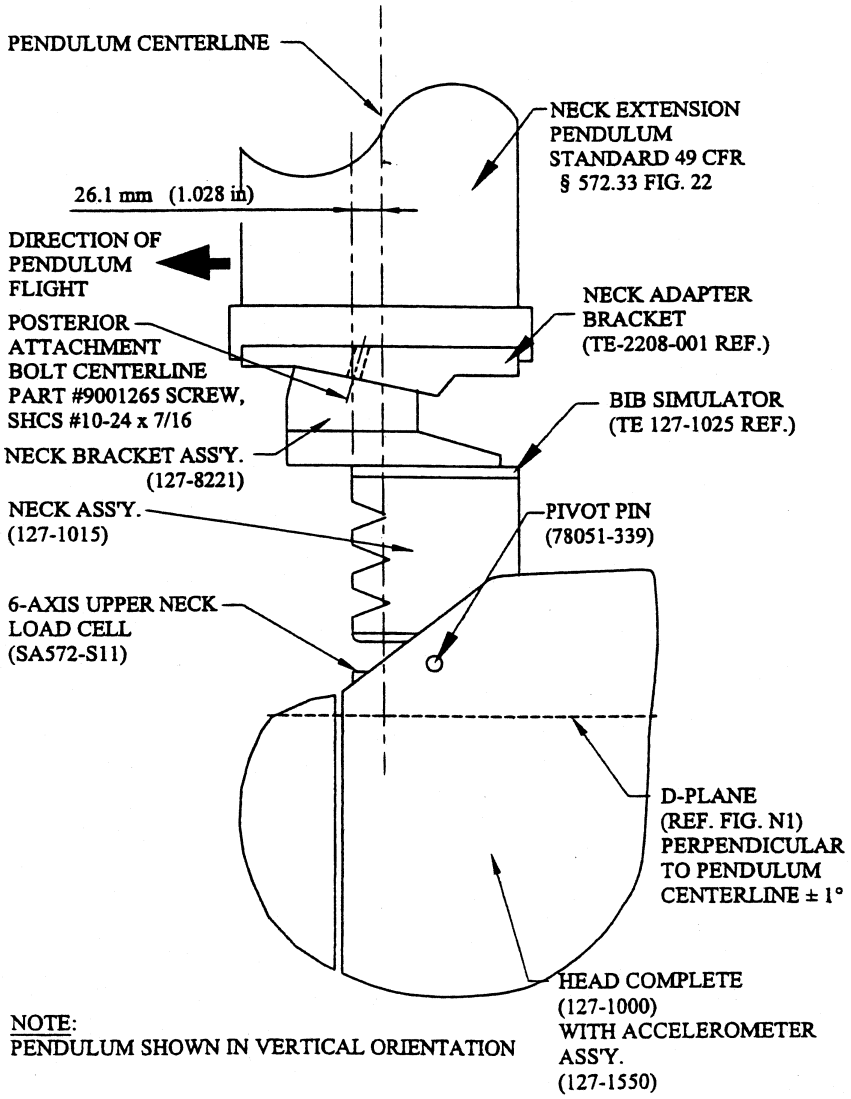

NOTE:
PENDULUM SHOWN IN VERTICAL ORIENTATION

FIGURE N 4

THORAX IMPACT TEST SET-UP SPECIFICATIONS

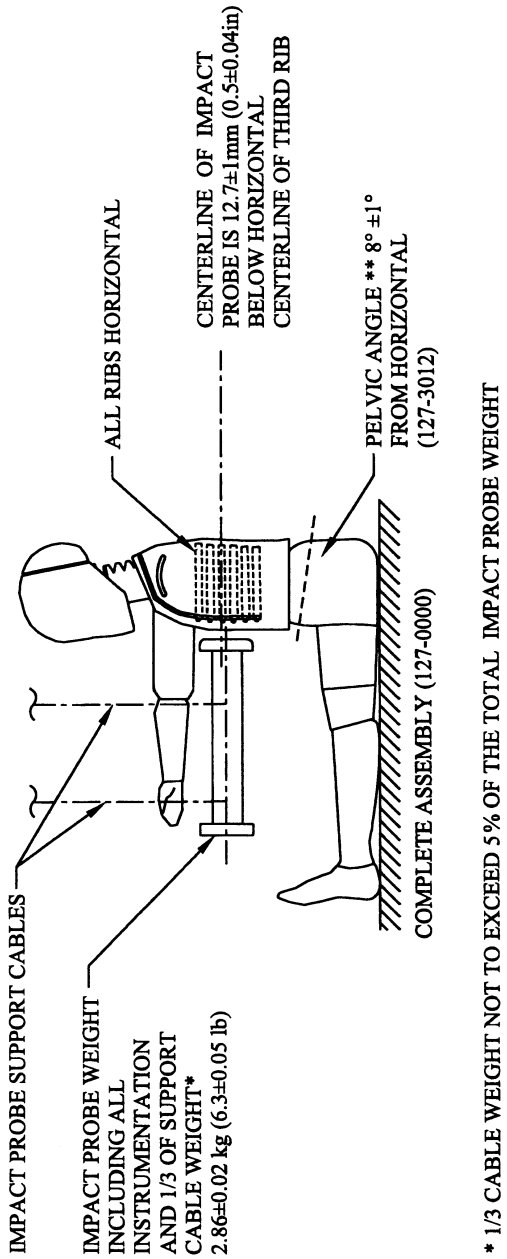

* 1/3 CABLE WEIGHT NOT TO EXCEED 5% OF THE TOTAL IMPACT PROBE WEIGHT

** PELVIS LUMBAR JOINING SURFACE

FIGURE N 5
TORSO FLEXION TEST SET-UP SPECIFICATIONS

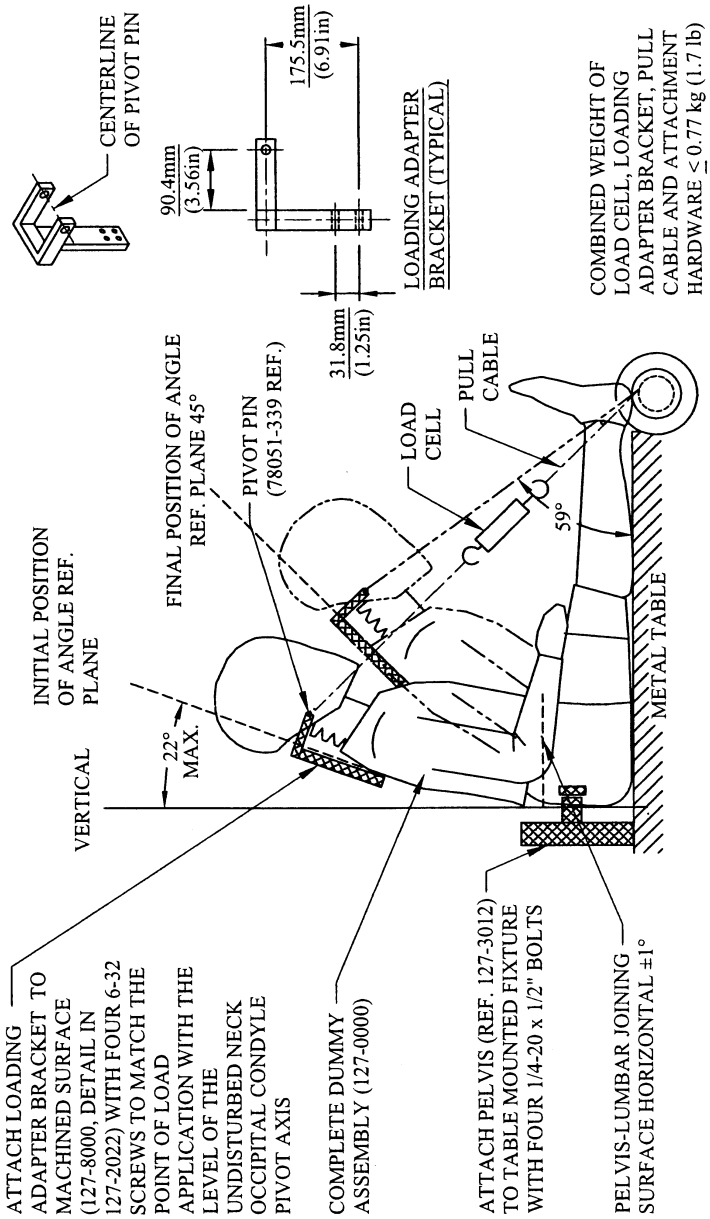

FIGURE N 6

KNEE IMPACT TEST SET-UP SPECIFICATIONS

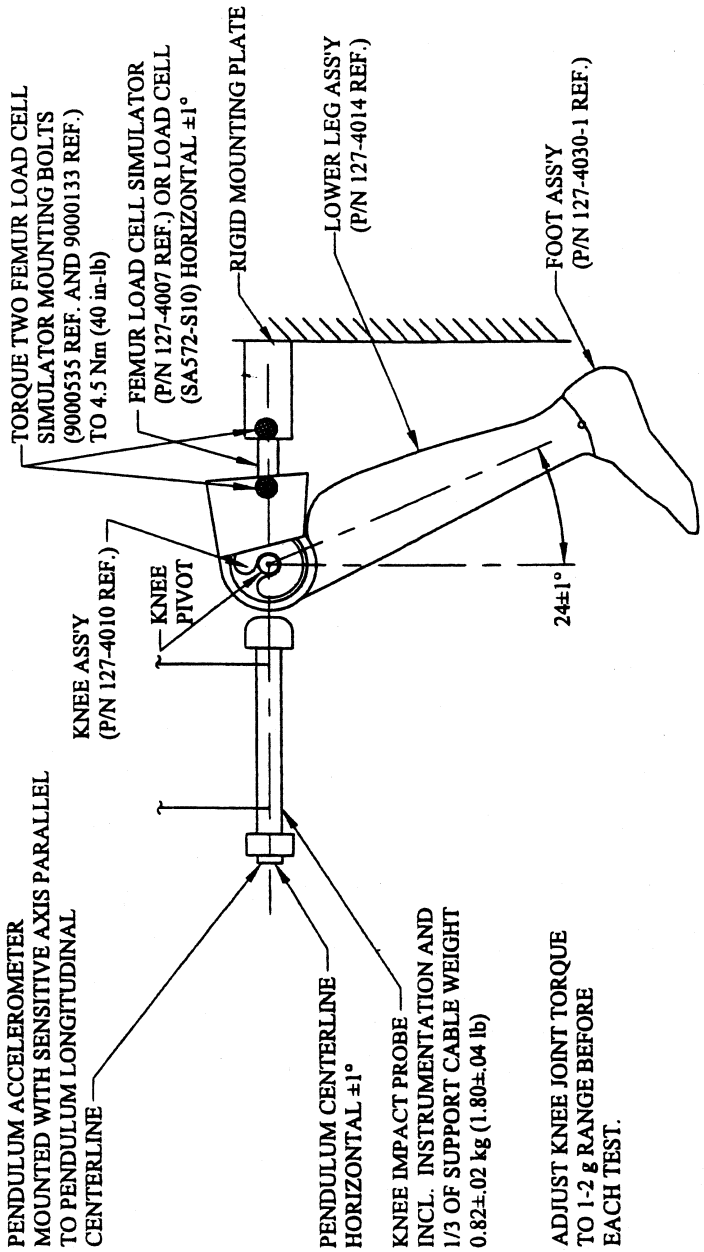

[65 FR 2065, Jan. 13, 2000, as amended at 67 FR 47329, July 18, 2002; 67 FR 59023, Sept. 19, 2002]

Subpart O—Hybrid III 5th Percentile Female Test Dummy, Alpha Version

SOURCE: 65 FR 10968, Mar. 1, 2000, unless otherwise noted.

§ 572.130 Incorporation by reference.

(a) The following materials are hereby incorporated into this Subpart by reference:

(1) A drawings and specification package entitled ''Parts List and Drawings, Part 572 Subpart O Hybrid III Fifth Percentile Small Adult Female Crash Test Dummy (HIII–5F, Alpha Version)'' (June 2002), incorporated by reference in ''572.131, and consisting of:

(i) Drawing No. 880105–100X, Head Assembly, incorporated by reference in §§ 572.131, 572.132, 572.133, 572.134, 572.135, and 572.137;

(ii) Drawing No. 880105–250, Neck Assembly, incorporated by reference in §§ 572.131, 572.133, 572.134, 572.135, and 572.137;

(iii) Drawing No. 880105–300, Upper Torso Assembly, incorporated by reference in §§ 572.131, 572.134, 572.135, and 572.137;

(iv) Drawing No. 880105–450, Lower Torso Assembly, incorporated by reference in §§ 572.131, 572.134, 572.135, and 572.137;

(v) Drawing No. 880105–560–1, Complete Leg Assembly—left, incorporated by reference in §§ 572.131, 572.135, 572.136, and 572.137;

(vi) Drawing No. 880105–560–2, Complete Leg Assembly—right incorporated by reference in §§ 572.131, 572.135, 572.136, and 572.137;

(vii) Drawing No. 880105–728–1, Complete Arm Assembly—left, incorporated by reference in §§ 572.131, 572.134, and 572.135 as part of the complete dummy assembly;

(viii) Drawing No. 880105–728–2, Complete Arm Assembly—right, incorporated by reference in §§ 572.131, 572.134, and 572.135 as part of the complete dummy assembly;

(ix) The Hybrid III 5th percentile small adult female crash test dummy parts list, incorporated by reference in § 572.131;

(2) A procedures manual entitled ''Procedures for Assembly, Disassembly, and Inspection (PADI) Subpart O Hybrid III Fifth Percentile Adult Female Crash Test Dummy (HIII–5F), Alpha Version'' (February 2002), incorporated by reference in § 572.132.

(3) SAE Recommended Practice J211/1, Rev. Mar 95 ''Instrumentation for Impact Tests—Part 1—Electronic Instrumentation'', incorporated by reference in § 572.137;

(4) SAE Recommended Practice J211/2, Rev. Mar 95 ''Instrumentation for Impact Tests—Part 2—Photographic Instrumentation'' incorporated by reference in § 572.137; and

(5) SAE J1733 of 1994–12 ''Sign Convention for Vehicle Crash Testing'', incorporated by reference in § 572.137.

(b) The Director of the Federal Register approved the materials incorporated by reference in accordance with 5 U.S.C. 552(a) and 1 CFR part 51. Copies of the materials may be inspected at NHTSA's Technical Reference Library, 400 Seventh Street SW., room 5109, Washington, DC, or at the National Archives and Records Administration (NARA). For information on the availability of this material at NARA, call 202–741–6030, or go to: *http://www.archives.gov/federal_register/code_of_federal_regulations/ibr_locations.html.*

(c) The incorporated materials are available as follows:

(1) The Parts List and Drawings, Part 572 Subpart O Hybrid III Fifth Percentile Small Adult Female Crash Test Dummy, (HIII–5F, Alpha Version) (June 2002), referred to in paragraph (a)(1) of this section and the Procedures for Assembly, Disassembly, and Inspection (PADI) of the Hybrid III 5th Percentile Small Adult Female Crash Test Dummy, Alpha Version, referred to in paragraph (a)(2) of this section are available from Reprographic Technologies, 9107 Gaither Road, Gaithersburg, MD 20877, (301) 419–5070. These documents are also accessible for reading and copying through the DOT Docket Management System.

(2) The SAE materials referred to in paragraphs (a)(3) and (a)(4) of this section are available from the Society of

Automotive Engineers, Inc., 400 Commonwealth Drive, Warrendale, Pa. 15096.

[65 FR 10968, Mar. 1, 2000, as amended at 67 FR 46413, July 15, 2002]

§ 572.131 General description.

(a) The Hybrid III fifth percentile adult female crash test dummy is defined by drawings and specifications containing the following materials:

(1) Technical drawings and specifications package P/N 880105–000 (refer to § 572.130(a)(1)), the titles of which are listed in Table A;

(2) Parts List and Drawings, Part 572 Subpart O Hybrid III Fifth Percentile Small Adult Female Crash Test Dummy (HIII–5F, Alpha Version) (June 2002) (refer to § 572.130(a)(1)(ix)).

TABLE A

Component assembly	Drawing No.
Head Assembly	880105–100X
Neck Assembly	880105–250
Upper Torso Assembly	880105–300
Lower Torso Assembly	880105–450
Complete Leg Assembly—left	880105–560–1
Complete Leg Assembly—right	880105–560–2
Complete Arm Assembly—left	880105–728–1
Complete Arm Assembly—right	880105–728–2

(b) Adjacent segments are joined in a manner such that, except for contacts existing under static conditions, there is no contact between metallic elements throughout the range of motion or under simulated crash impact conditions.

(c) The structural properties of the dummy are such that the dummy conforms to this Subpart in every respect before use in any test similar to those specified in Standard 208, Occupant Crash Protection.

[65 FR 10968, Mar. 1, 2000, as amended at 67 FR 46414, July 15, 2002]

§ 572.132 Head assembly and test procedure.

(a) The head assembly (refer to § 572.130(a)(1)(i)) for this test consists of the complete head (drawing 880105–100X), a six-axis neck transducer (drawing SA572–S11) or its structural replacement (drawing 78051–383X), and 3 accelerometers (drawing SA572–S4).

(b) When the head assembly is dropped from a height of 376.0 ±1.0 mm (14.8 ±0.04 in) in accordance with subsection (c) of this section, the peak resultant acceleration at the location of the accelerometers at the head CG may not be less than 250 G or more than 300 G. The resultant acceleration vs. time history curve shall be unimodal; oscillations occurring after the main pulse must be less than 10 percent of the peak resultant acceleration. The lateral acceleration shall not exceed 15 G (zero to peak).

(c) *Head test procedure*. The test procedure for the head is as follows:

(1) Soak the head assembly in a controlled environment at any temperature between 18.9 and 25.6 °C (66 and 78 °F) and a relative humidity from 10 to 70 percent for at least four hours prior to a test.

(2) Prior to the test, clean the impact surface of the skin and the impact plate surface with isopropyl alcohol, trichloroethane, or an equivalent. The skin of the head must be clean and dry for testing.

(3) Suspend and orient the head assembly as shown in Figure 19 of 49 CFR 572. The lowest point on the forehead must be 376.0 ±1.0 mm (14.8 ±0.04 in) from the impact surface. The 1.57 mm (0.062 in) diameter holes located on either side of the dummy's head shall be used to ensure that the head is level with respect to the impact surface.

(4) Drop the head assembly from the specified height by means that ensure a smooth, instant release onto a rigidly supported flat horizontal steel plate which is 50.8 mm (2.0 in) thick and 610 mm (24.0 in) square. The impact surface shall be clean, dry and have a micro finish of not less than $203.2.\times10^{-6}$ mm (8 micro inches) (RMS) and not more than 2032.0×10^{-6} mm (80 micro inches) (RMS).

(5) Allow at least 2 hours between successive tests on the same head.

§ 572.133 Neck assembly and test procedure.

(a) The neck assembly (refer to § 572.130(a)(1)(ii)) for the purposes of this test consists of the assembly of components shown in drawing 880105–250.

(b) When the head-neck assembly consisting of the head (drawing 880105–100X), neck (drawing 880105–250), bib

simulator (drawing 880105–371), upper neck adjusting bracket (drawing 880105–207), lower neck adjusting bracket (drawing 880105–208), six-axis neck transducer (drawing SA572–S11), and either three accelerometers (drawing SA572–S4) or their mass equivalent installed in the head assembly as specified in drawing 880105–100X, is tested according to the test procedure in subsection (c) of this section, it shall have the following characteristics:

(1) *Flexion*. (i) Plane D, referenced in Figure O1, shall rotate in the direction of preimpact flight with respect to the pendulum's longitudinal centerline between 77 degrees and 91 degrees. During the time interval while the rotation is within the specified corridor, the peak moment, measured by the neck transducer (drawing SA5572–311), about the occipital condyles may not be less than 69 N-m (51 ft-lbf) and not more than 83 N-m (61 ft-lbf). The positive moment shall decay for the first time to 10 N-m (7.4 ft-lbf) between 80 ms and 100 ms after time zero.

(ii) The moment shall be calculated by the following formula: Moment (N-m)= $M_y - (0.01778m) \times (F_x)$.

(iii) M_y is the moment about the y-axis, F_x is the shear force measured by the neck transducer (drawing SA572–S11), and 0.01778m is the distance from force to occipital condyle.

(2) *Extension*. (i) Plane D, referenced in Figure O2, shall rotate in the direction of preimpact flight with respect to the pendulum's longitudinal centerline between 99 degrees and 114 degrees. During the time interval while the rotation is within the specified corridor, the peak moment, measured by the neck transducer (drawing SA5572–S11), about the occipital condyles shall be not more than −53 N-m (−39 ft-lbf) and not less than −65 N-m (−48 ft-lbf). The negative moment shall decay for the first time to −10 N-m (−7.4 ft-lbf) between 94 ms and 114 ms after time zero.

(ii) The moment shall be calculated by the following formula: Moment (N-m) = $M_y - (0.01778m) \times (F_x)$.

(iii) M_y is the moment about the y-axis, F_x is the shear force measured by the neck transducer (drawing SA572–S11), and 0.01778 m is the distance from force to occipital condyle.

(3) Time-zero is defined as the time of initial contact between the pendulum striker plate and the honeycomb material. All data channels shall be at the zero level at this time.

(c) *Test Procedure*. The test procedure for the neck assembly is as follows:

(1) Soak the neck assembly in a controlled environment at any temperature between 20.6 and 22.2 °C (69 and 72 °F) and a relative humidity between 10 and 70 percent for at least four hours prior to a test.

(2) Torque the jam nut (drawing 9000018) on the neck cable (drawing 880105–206) to 1.4 ±0.2 N-m (12.0 ±2.0 in-lb).

(3) Mount the head-neck assembly, defined in subsection (b) of this section, on the pendulum described in Figure 22 of 49 CFR 572 so that the midsagittal plane of the head is vertical and coincides with the plane of motion of the pendulum as shown in Figure O1 for flexion tests and Figure O2 for extension tests.

(4)(i) Release the pendulum and allow it to fall freely from a height to achieve an impact velocity of 7.01 ±0.12 m/s (23.0 ±0.4 ft/s) for flexion tests and 6.07 ±0.12 m/s (19.9 ±0.40 ft/s) for extension tests, measured by an accelerometer mounted on the pendulum as shown in Figure 22 of 49 CFR 572 at the instant of contact with the honey comb.

(ii) Stop the pendulum from the initial velocity with an acceleration vs. time pulse which meets the velocity change as specified below. Integrate the pendulum acceleration data channel to obtain the velocity vs. time curve:

TABLE B—PENDULUM PULSE

Time ms	Flexion		Extension	
	m/s	ft/s	m/s	ft/s
10	2.1–2.5	6.9–8.2	1.5–1.9	4.9–6.2
20	4.0–5.0	13.1–16.4	3.1–3.9	10.2–12.8
30	5.8–7.0	19.5–23.0	4.6–5.6	15.1–18.4

[65 FR 10968, Mar. 1, 2000, as amended at 67 FR 46414, July 15, 2002]

§ 572.134 Thorax assembly and test procedure.

(a) Thorax (Upper Torso) Assembly (refer to § 572.130(a)(1)(iii)). The thorax consists of the part of the torso assembly shown in drawing 880105–300.

(b) When the anterior surface of the thorax of a completely assembled dummy (drawing 880105–000) is impacted by a test probe conforming to section 572.137(a) at 6.71 ±0.12 m/s (22.0 ±0.4 ft/s) according to the test procedure in subsection (c) of this section:

(1) Maximum sternum displacement (compression) relative to the spine, measured with chest deflection transducer (drawing SA572–S5), must be not less than 50.0 mm (1.97 in) and not more than 58.0 mm (2.30 in). Within this specified compression corridor, the peak force, measured by the impact probe as defined in section 572.137 and calculated in accordance with paragraph (b)(3) of this section, shall not be less than 3900 N (876 lbf) and not more than 4400 N (989 lbf). The peak force after 18.0 mm (0.71 in) of sternum displacement but before reaching the minimum required 50.0 mm (1.97 in) sternum displacement limit shall not exceed 4600 N.

(2) The internal hysteresis of the ribcage in each impact as determined by the plot of force vs. deflection in paragraph (1) of this section shall be not less than 69 percent but not more than 85 percent. The hysteresis shall be calculated by determining the ratio of the area between the loading and unloading portions of the force deflection curve to the area under the loading portion of the curve.

(3) The force shall be calculated by the product of the impactor mass and its deceleration.

(c) *Test procedure*. The test procedure for the thorax assembly is as follows:

(1) The dummy is clothed in a form fitting cotton stretch above-the-elbow sleeved shirt and above-the-knee pants. The weight of the shirt and pants shall not exceed 0.14 kg (0.30 lb) each.

(2) Soak the dummy in a controlled environment at any temperature between 20.6 and 22.2 °C (69 and 72 °F) and a relative humidity between 10 and 70 percent for at least four hours prior to a test.

(3) Seat and orient the dummy on a seating surface without back support as shown in Figure O3, with the limbs extended horizontally and forward, parallel to the midsagittal plane, the midsagittal plane vertical within ±1 degree and the ribs level in the anterior-posterior and lateral directions within ±0.5 degrees.

(4) Establish the impact point at the chest midsagittal plane so that the impact point of the longitudinal centerline of the probe coincides with the midsagittal plane of the dummy within ±2.5 mm (0.1 in) and is 12.7 ±1.1 mm (0.5 ±0.04 in) below the horizontal-peripheral centerline of the No. 3 rib and is within 0.5 degrees of a horizontal line in the dummy's midsagittal plane.

(5) Impact the thorax with the test probe so that at the moment of contact the probe's longitudinal center line falls within 2 degrees of a horizontal line in the dummy's midsagittal plane.

(6) Guide the test probe during impact so that there is no significant lateral, vertical or rotational movement.

(7) No suspension hardware, suspension cables, or any other attachments to the probe, including the velocity vane, shall make contact with the dummy during the test.

[65 FR 10968, Mar. 1, 2000, as amended at 67 FR 46415, July 15, 2002]

§ 572.135 Upper and lower torso assemblies and torso flexion test procedure.

(a) *Upper/lower torso assembly*. The test objective is to determine the stiffness effects of the lumbar spine (drawing 880105–1096), and abdominal insert (drawing 880105–434), on resistance to articulation between the upper torso assembly (drawing 880105–300) and the lower torso assembly (drawing 880105–450) (refer to § 572.130(a)(1)(iv)).

(b)(1) When the upper torso assembly of a seated dummy is subjected to a force continuously applied at the head to neck pivot pin level through a rigidly attached adaptor bracket as shown in Figure O4 according to the test procedure set out in subsection (c) of this section, the lumbar spine-abdomen assembly shall flex by an amount that permits the upper torso assembly to

translate in angular motion relative to the vertical transverse plane 45 ±0.5 degrees at which time the force applied must be not less than 320 N (71.5 lbf) and not more than 390 N (87.4 lbf), and

(2) Upon removal of the force, the torso assembly must return to within 8 degrees of its initial position.

(c) *Test procedure.* The test procedure for the upper/lower torso assembly is as follows:

(1) Soak the dummy in a controlled environment at any temperature between 18.9 and 25.6 °C (66 and 78 °F) and a relative humidity between 10 and 70 percent for at least four hours prior to a test.

(2) Assemble the complete dummy (with or without the legs below the femurs) and attach to the fixture in a seated posture as shown in Figure O4.

(3) Secure the pelvis to the fixture at the pelvis instrument cavity rear face by threading four ¼ inch cap screws into the available threaded attachment holes. Tighten the mountings so that the test material is rigidly affixed to the test fixture and the pelvic-lumbar joining surface is horizontal.

(4) Attach the loading adapter bracket to the spine of the dummy as shown in Figure O4.

(5) Inspect and adjust, if necessary, the seating of the abdominal insert within the pelvis cavity and with respect to the torso flesh, assuring that the torso flesh provides uniform fit and overlap with respect to the outside surface of the pelvis flesh.

(6) Flex the dummy's upper torso three times between the vertical and until the torso reference plane, as shown in Figure O4, reaches 30 degrees from the vertical transverse plane. Bring the torso to vertical orientation and wait for 30 minutes before conducting the test. During the 30 minute waiting period, the dummy's upper torso shall be externally supported at or near its vertical orientation to prevent it from drooping.

(7) Remove all external support and wait two minutes. Measure the initial orientation angle of the torso reference plane of the seated, unsupported dummy as shown in Figure O4. The initial orientation angle may not exceed 20 degrees.

(8) Attach the pull cable and the load cell as shown in Figure O4.

(9) Apply a tension force in the midsagittal plane to the pull cable as shown in Figure O4 at any upper torso deflection rate between 0.5 and 1.5 degrees per second, until the angle reference plane is at 45 ±0.5 degrees of flexion relative to the vertical transverse plane.

(9) Continue to apply a force sufficient to maintain 45 ±0.5 degrees of flexion for 10 seconds, and record the highest applied force during the 10-second period.

(10) Release all force at the attachment bracket as rapidly as possible, and measure the return angle with respect to the initial angle reference plane as defined in paragraph (6) 3 minutes after the release.

§ 572.136 Knees and knee impact test procedure.

(a) *Knee assembly.* The knee assembly (refer to §§ 572.130(a)(1)(v) and (vi)) for the purpose of this test is the part of the leg assembly shown in drawing 880105–560.

(b)(1) When the knee assembly, consisting of sliding knee assembly (drawing 880105–528R or –528L), lower leg structural replacement (drawing 880105–603), lower leg flesh (drawing 880105–601), ankle assembly (drawing 880105–660), foot assembly (drawing 880105–651 or 650), and femur load transducer (drawing SA572–S14) or its structural replacement (drawing 78051–319) is tested according to the test procedure in subsection (c), the peak resistance force as measured with the test probe-mounted accelerometer must be not less than 3450 N (776 lbf) and not more than 4060 N (913 lbf).

(2) The force shall be calculated by the product of the impactor mass and its deceleration.

(c) *Test procedure.* The test procedure for the knee assembly is as follows:

(1) Soak the knee assembly in a controlled environment at any temperature between 18.9 and 25.6 °C (66 and 78 °F) and a relative humidity from 10 to 70 percent for at least four hours prior to a test.

(2) Mount the test material and secure it to a rigid test fixture as shown

in Figure O5. No part of the foot or tibia may contact any exterior surface.

(3) Align the test probe so that throughout its stroke and at contact with the knee it is within 2 degrees of horizontal and collinear with the longitudinal centerline of the femur.

(4) Guide the pendulum so that there is no significant lateral vertical or rotational movement at the time of initial contact between the impactor and the knee.

(5) The test probe velocity at the time of contact shall be 2.1 ±0.03 m/s (6.9 ±0.1 ft/s).

(6) No suspension hardware, suspension cables, or any other attachments to the probe, including the velocity vane, shall make contact with the dummy during the test.

[65 FR 10968, Mar. 1, 2000, as amended at 67 FR 46415, July 15, 2002]

§ 572.137 Test conditions and instrumentation.

(a) The test probe for thoracic impacts, except for attachments, shall be of rigid metallic construction and concentric about its longitudinal axis. Any attachments to the impactor, such as suspension hardware, impact vanes, etc., must meet the requirements of § 572.134(c)(7). The impactor shall have a mass of 13.97 ±0.23 kg (30.8 ±0.5 lbs) and a minimum mass moment of inertia of 3646 kg-cm^2 (3.22 lbs-in-sec^2) in yaw and pitch about the CG of the probe. One-third (1/3) of the weight of suspension cables and any attachments to the impact probe must be included in the calculation of mass, and such components may not exceed five percent of the total weight of the test probe. The impacting end of the probe, perpendicular to and concentric with the longitudinal axis of the probe, has a flat, continuous, and non-deformable 152.4 ±0.25 mm (6.00 ±0.01 in) diameter face with a minimum/maximum edge radius of 7.6/12.7 mm (0.3/0.5 in). The impactor shall have a 152.4–152.6 mm (6.0–6.1 in) diameter cylindrical surface extending for a minimum of 25 mm (1.0 in) to the rear from the impact face. The probe's end opposite to the impact face has provisions for mounting of an accelerometer with its sensitive axis collinear with the longitudinal axis of the probe. The impact probe has a free air resonant frequency of not less than 1000 Hz, which may be determined using the procedure listed in Docket No. NHTSA–6714–14.

(b) The test probe for knee impacts, except for attachments, shall be of rigid metallic construction and concentric about its longitudinal axis. Any attachments to the impactor, such as suspension hardware, impact vanes, etc., must meet the requirements of § 572.136(c)(6). The impactor shall have a mass of 2.99±0.23 kg (6.6±0.5 lbs) and a minimum mass moment of inertia of 209 kg-cm^2 (0.177 lb-in-sec^2) in yaw and pitch about the CG of the probe. One-third (1/3) of the weight of suspension cables and any attachments to the impact probe may be included in the calculation of mass, and such components may not exceed five percent of the total weight of the test probe. The impacting end of the probe, perpendicular to and concentric with the longitudinal axis of the probe, has a flat, continuous, and non-deformable 76.2 ±0.2 mm (3.00 ±0.01 in) diameter face with a minimum/maximum edge radius of 7.6/12.7 mm (0.3/0.5 in). The impactor shall have a 76.2–76.4 mm (3.0–3.1 in) diameter cylindrical surface extending for a minimum of 12.5 mm (0.5 in) to the rear from the impact face. The probe's end opposite to the impact face has provisions for mounting an accelerometer with its sensitive axis collinear with the longitudinal axis of the probe. The impact probe has a free air resonant frequency of not less than 1000 Hz, which may be determined using the procedure listed in Docket No. NHTSA–6714–14.

(c) Head accelerometers shall have dimensions, response characteristics, and sensitive mass locations specified in drawing SA572–S4 and be mounted in the head as shown in drawing 880105–000 sheet 3 of 6.

(d) The upper neck force/moment transducer shall have the dimensions, response characteristics, and sensitive axis locations specified in drawing SA572–S11 and be mounted in the head neck assembly as shown in drawing 880105–000, sheet 3 of 6.

(e) The thorax accelerometers shall have the dimensions, response characteristics, and sensitive mass locations specified in drawing SA572–S4 and be

mounted in the torso assembly in triaxial configuration within the spine box instrumentation cavity and as optional instrumentation in uniaxial for-and-aft oriented configuration arranged as corresponding pairs in three locations on the sternum on and at the spine box of the upper torso assembly as shown in drawing 880105–000 sheet 3 of 6.

(f) The optional lumbar spine force-moment transducer shall have the dimensions, response characteristics, and sensitive axis locations specified in drawing SA572–S15 and be mounted in the lower torso assembly as shown in drawing 880105–450.

(g) The optional iliac spine force transducers shall have the dimensions and response characteristics specified in drawing SA572–S16 and be mounted in the torso assembly as shown in drawing 880105–450.

(h) The pelvis accelerometers shall have the dimensions, response characteristics, and sensitive mass locations specified in drawing SA572–S4 and be mounted in the torso assembly in triaxial configuration in the pelvis bone as shown in drawing 880105–000 sheet 3.

(i) The single axis femur force transducer (SA572–S14) or the optional multiple axis femur force/moment transducer (SA572–S29) shall have the dimensions, response characteristics, and sensitive axis locations specified in the appropriate drawing and be mounted in the femur assembly as shown in drawing 880105–500 sheet 3 of 6.

(j) The chest deflection transducer shall have the dimensions and response characteristics specified in drawing SA572–S51 and be mounted to the upper torso assembly as shown in drawings 880105–300 and 880105–000 sheet 3 of 6.

(k) The optional lower neck force/moment transducer shall have the dimensions, response characteristics, and sensitive axis locations specified in drawing SA572–S27 and be mounted to the upper torso assembly as shown in drawing 880105–000 sheet 3 of 6.

(l) The optional thoracic spine force/moment transducer shall have the dimensions, response characteristics, and sensitive axis locations specified in drawing SA572–S28 and be mounted in the upper torso assembly as shown in drawing 880105–000 sheet 3 of 6.

(m) The outputs of acceleration and force-sensing devices installed in the dummy and in the test apparatus specified by this part shall be recorded in individual data channels that conform to SAE Recommended Practice J211/10, Rev. Mar95 ''Instrumentation for Impact Impact Tests;—Part 1—Electronic Instrumentation,'' and SAE Recommended Practice J211/2, Rev Mar95 ''Instrumentation for Impact Tests—Part 2—Photographic Instrumentation'', (refer to §§ 572.130(a)(3) and (4) respectively) except as noted, with channel classes as follows:

(1) Head acceleration—Class 1000

(2) Neck:

(i) Forces—Class 1000

(ii) Moments—Class 600

(iii) Pendulum acceleration—Class 180

(iv) Rotation potentiometer—Class 60 (optional)

(3) Thorax:

(i) Rib acceleration—Class 1000

(ii) Spine and pendulum accelerations—Class 180

(iii) Sternum deflection—Class 600

(iv) Forces—Class 1000

(v) Moments—Class 600

(4) Lumbar:

(i) Forces—Class 1000

(ii) Moments—Class 600

(iii) Torso flexion pulling force—Class 60 if data channel is used

(5) Pelvis:

(i) Accelerations—Class 1000

(ii) Iliac wing forces—Class 180

(6) Femur forces and knee pendulum—Class 600

(n) Coordinate signs for instrumentation polarity shall conform to the Sign Convention For Vehicle Crash Testing, Surface Vehicle Information Report, SAE J1733, 1994–12 (refer to section 572.130(a)(4)).

(o) The mountings for sensing devices shall have no resonance frequency less than 3 times the frequency range of the applicable channel class.

(p) Limb joints must be set at one G, barely restraining the weight of the limb when it is extended horizontally. The force needed to move a limb segment shall not exceed 2G throughout the range of limb motion.

(q) Performance tests of the same component, segment, assembly, or

fully assembled dummy shall be separated in time by not less than 30 minutes unless otherwise noted.

(r) Surfaces of dummy components may not be painted except as specified in this subpart or in drawings subtended by this subpart.

[65 FR 10968, Mar. 1, 2000, as amended at 67 FR 46415, July 15, 2002; 74 FR 29894, June 23, 2009]

FIGURES TO SUBPART O OF PART 572

FIGURE O1
NECK FLEXION TEST SETUP SPECIFICATIONS

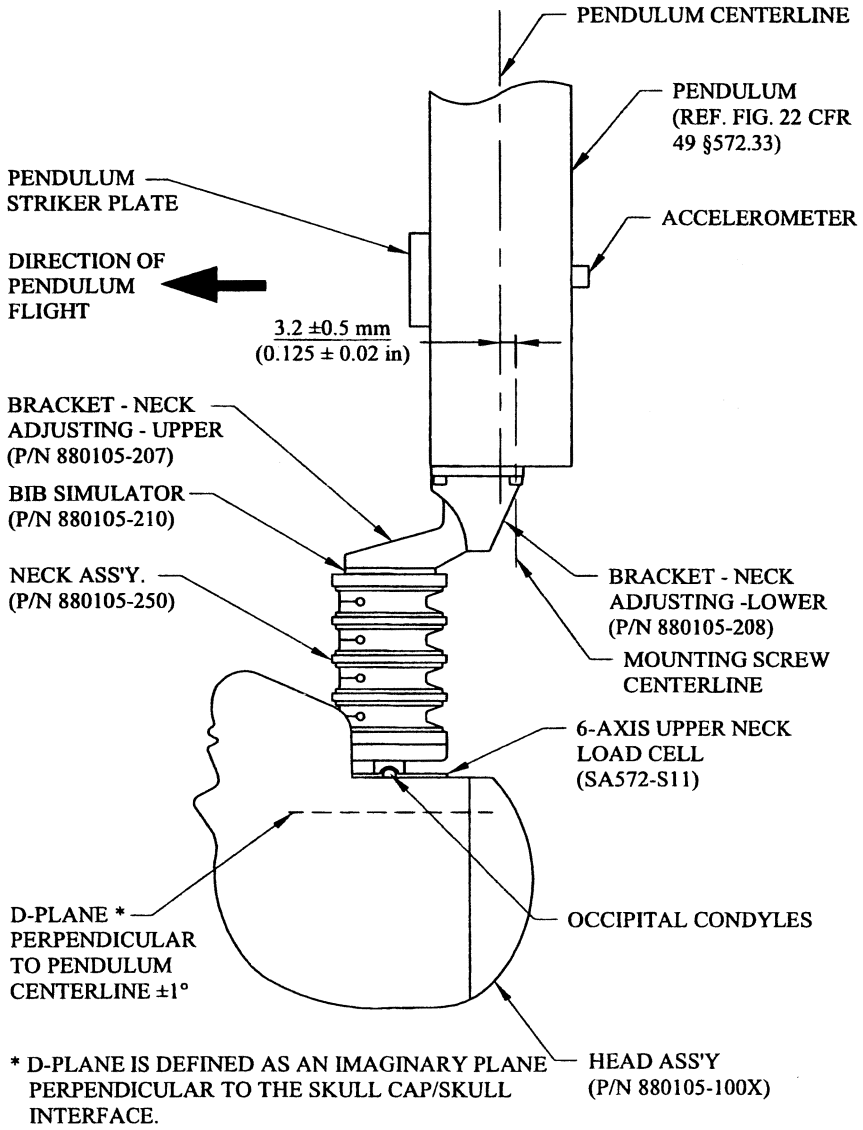

* D-PLANE IS DEFINED AS AN IMAGINARY PLANE PERPENDICULAR TO THE SKULL CAP/SKULL INTERFACE.

FIGURE O2
NECK EXTENSION TEST SETUP SPECIFICATIONS

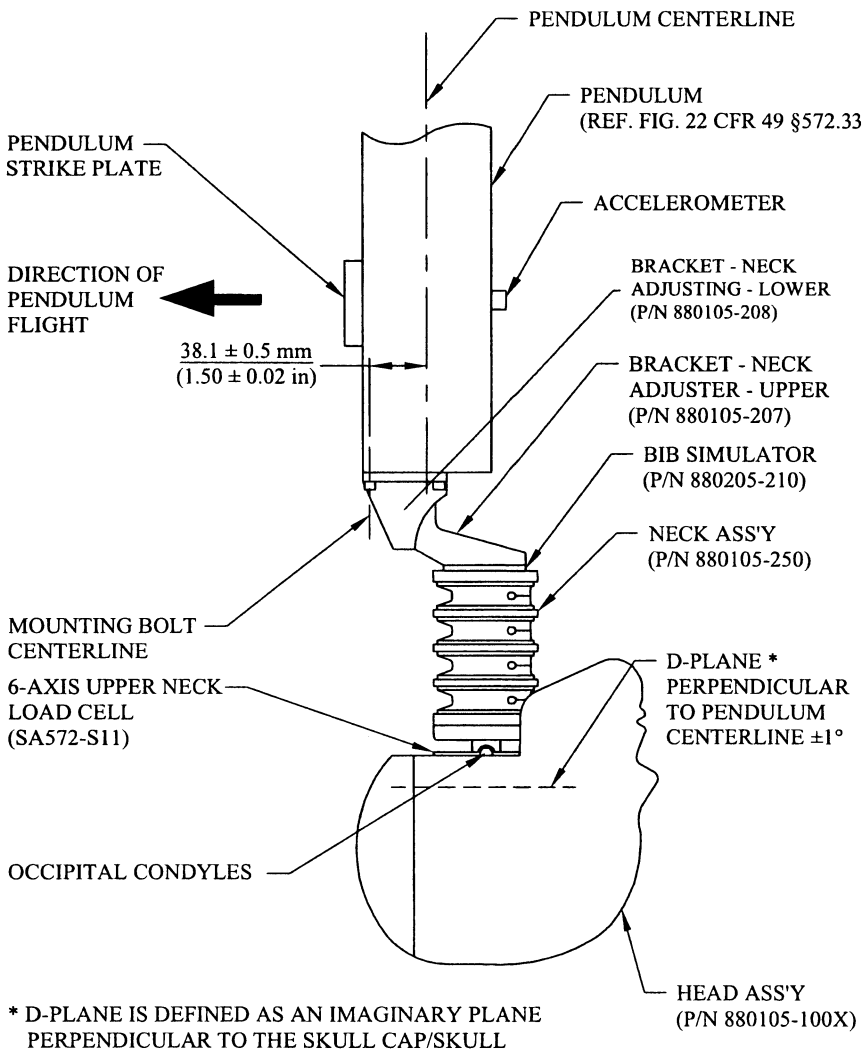

* D-PLANE IS DEFINED AS AN IMAGINARY PLANE PERPENDICULAR TO THE SKULL CAP/SKULL INTERFACE.

FIGURE 03
THORAX IMPACT TEST SETUP SPECIFICATIONS

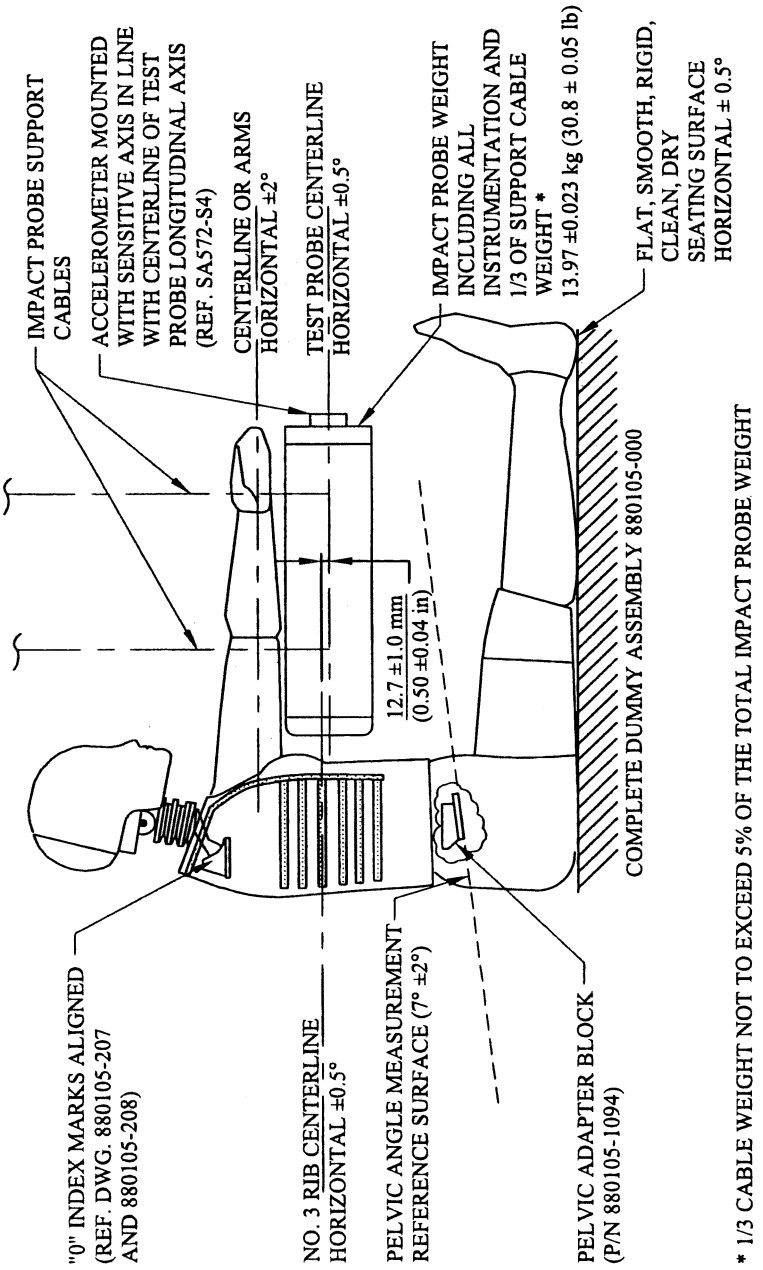

* 1/3 CABLE WEIGHT NOT TO EXCEED 5% OF THE TOTAL IMPACT PROBE WEIGHT

FIGURE O4
TORSO FLEXION TEST SET UP SPECIFICATIONS

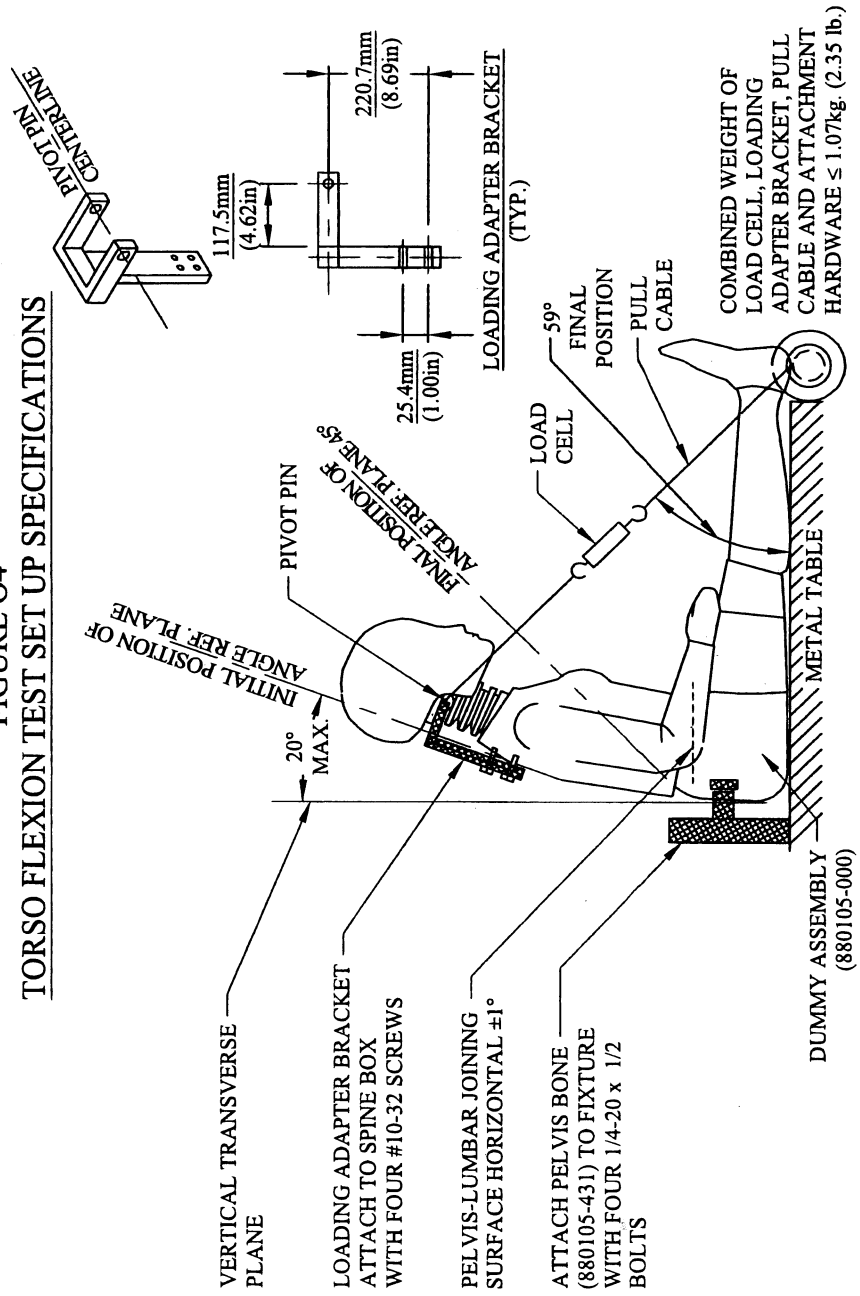

FIGURE O5
KNEE IMPACT TEST SETUP SPECIFICATIONS

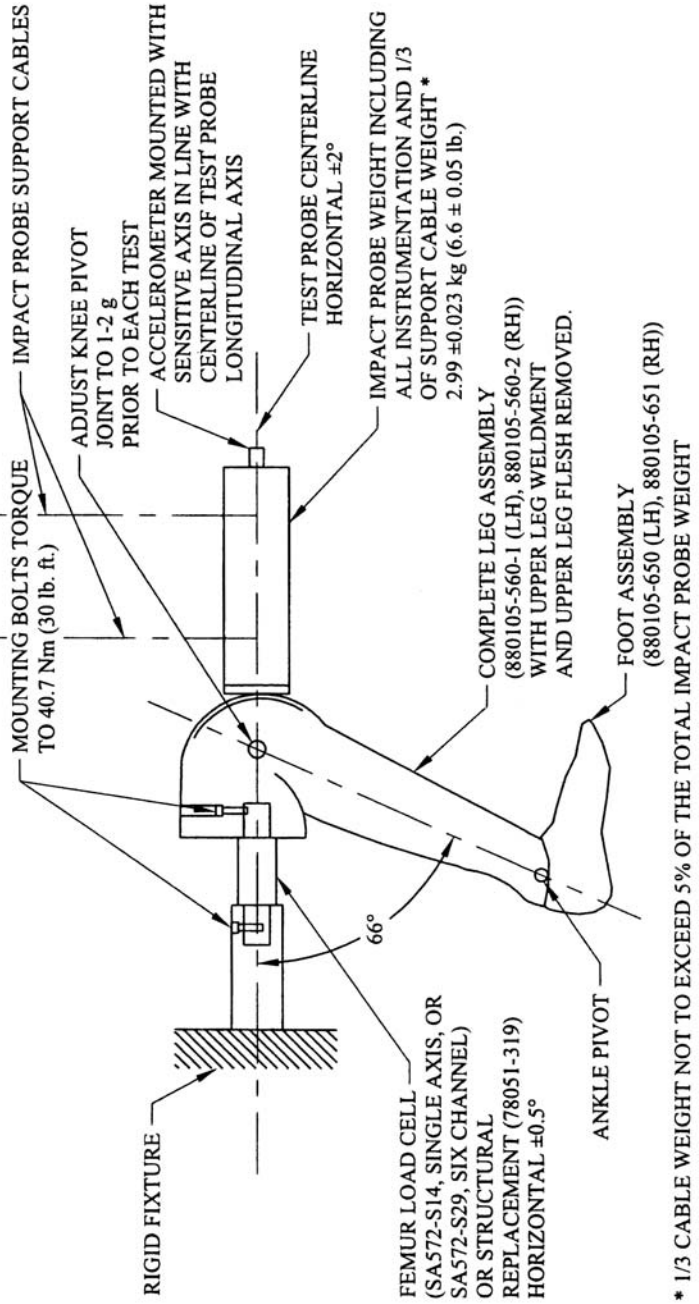

[65 FR 10968, Mar. 1, 2000, as amended at 67 FR 46415, July 15, 2002]

Subpart P—3-year-Old Child Crash Test Dummy, Alpha Version

SOURCE: 65 FR 15262, Mar. 22, 2000, unless otherwise noted.

§ 572.140 Incorporation by reference.

(a) The following materials are hereby incorporated in this subpart P by reference:

(1) A drawings and specifications package entitled, ''Parts List and Drawings, Subpart P Hybrid III 3-year-old child crash test dummy, (H-III3C, Alpha version) September 2001,'' incorporated by reference in § 572.141 and consisting of:

(i) Drawing No. 210–1000, Head Assembly, incorporated by reference in §§ 572.141, 572.142, 572.144, 572.145, and 572.146;

(ii) Drawing No. 210–2001, Neck Assembly, incorporated by reference in §§ 572.141, 572.143, 572.144, 572.145, and 572.146;

(iii) Drawing No. TE–208–000, Headform, incorporated by reference in §§ 572.141, and 572.143;

(iv) Drawing No. 210–3000, Upper/Lower Torso Assembly, incorporated by reference in §§ 572.141, 572.144, 572.145, and 572.146;

(v) Drawing No. 210–5000–1(L), –2(R), Leg Assembly, incorporated by reference in §§ 572.141, 572.144, 572.145 as part of a complete dummy assembly;

(vi) Drawing No. 210–6000–1(L), –2(R), Arm Assembly, incorporated by reference in §§ 572.141, 572.144, and 572.145 as part of the complete dummy assembly;

(2) A procedures manual entitled ''Procedures for Assembly, Disassembly and Inspection (PADI), Subpart P, Hybird III 3-year-old Child Crash Test Dummy, (H-III3C, Alpha Version) September 2001,'' incorporated by reference in § 572.141;

(3) SAE Recommended Practice J211/1, Rev. Mar 95 ''Instrumentation for Impact Tests—Part 1-Electronic Instrumentation'', incorporated by reference in § 572.146;

(4) SAE J1733 1994–12 ''Sign Convention for Vehicle Crash Testing'' incorporated by reference in § 572.146.

(5) The Director of the Federal Register approved those materials incorporated by reference in accordance with 5 U.S.C. 552(a) and 1 CFR Part 51. Copies of the materials may be inspected at NHTSA's Docket Section, 400 Seventh Street SW, room 5109, Washington, DC, or at the National Archives and Records Administration (NARA). For information on the availability of this material at NARA, call 202–741–6030, or go to: *http://www.archives.gov/federal_register/code_of_federal_regulations/ibr_locations.html.*

(b) The incorporated materials are available as follows:

(1) The drawings and specifications package referred to in paragraph (a)(1) of this section and the PADI document referred to in paragraph (a)(2) of this section are accessible for viewing and copying at the Department of Transportation's Docket public area, Plaza 401, 400 Seventh St., SW., Washington, DC 20590, and downloadable at *dms.dot.gov*. They are also available from Reprographic Technologies, 9107 Gaither Rd., Gaithersburg, MD 20877, (301) 419–5070.

(2) The SAE materials referred to in paragraphs (a)(3) and (a)(4) of this section are available from the Society of Automotive Engineers, Inc., 400 Commonwealth Drive, Warrendale, PA 15096.

[65 FR 15262, Mar. 22, 2000, as amended at 66 FR 64376, Dec. 13, 2001]

§ 572.141 General description.

(a) The Hybrid III 3-year-old child dummy is described by the following materials:

(1) Technical drawings and specifications package 210–0000 (refer to § 572.140(a)(1)), the titles of which are listed in Table A of this section;

(2) Procedures for Assembly, Disassembly and Inspection document (PADI) (refer to § 572.140(a)(2)).

(b) The dummy is made up of the component assemblies set out in the following Table A of this section:

TABLE A

Component assembly	Drawing No.
Head Assembly	210–1000
Neck Assembly (complete)	210–2001
Upper/Lower Torso Assembly	210–3000
Leg Assembly	210–5000–1(L), –2(R)

TABLE A—Continued

Component assembly	Drawing No.
Arm Assembly	210–6000–1(L), –2(R)

(c) Adjacent segments are joined in a manner such that except for contacts existing under static conditions, there is no contact between metallic elements throughout the range of motion or under simulated crash impact conditions.

(d) The structural properties of the dummy are such that the dummy conforms to this part in every respect only before use in any test similar to those specified in Standard 208, *Occupant Crash Protection,* and Standard 213, *Child Restraint Systems.*

§ 572.142 Head assembly and test procedure.

(a) The head assembly (refer to § 572.140(a)(1)(i)) for this test consists of the head (drawing 210–1000), adapter plate (drawing ATD 6259), accelerometer mounting block (drawing SA 572–S80), structural replacement of ½ mass of the neck load transducer (drawing TE–107–001), head mounting washer (drawing ATD 6262), one ½–20×1″ flat head cap screw (FHCS) (drawing 9000150), and 3 accelerometers (drawing SA–572–S4).

(b) When the head assembly in paragraph (a) of this section is dropped from a height of 376.0±1.0 mm (14.8±0.04 in) in accordance with paragraph (c) of this section, the peak resultant acceleration at the location of the accelerometers at the head CG shall not be less than 250 g or more than 280 g. The resultant acceleration versus time history curve shall be unimodal, and the oscillations occurring after the main pulse shall be less than 10 percent of the peak resultant acceleration. The lateral acceleration shall not exceed ±15 G (zero to peak).

(c) *Head test procedure.* The test procedure for the head is as follows:

(1) Soak the head assembly in a controlled environment at any temperature between 18.9 and 25.6 °C (66 and 78 °F) and at any relative humidity between 10 and 70 percent for at least four hours prior to a test.

(2) Prior to the test, clean the impact surface of the head skin and the steel impact plate surface with isopropyl alcohol, trichlorethane, or an equivalent. Both impact surfaces must be clean and dry for testing.

(3) Suspend the head assembly with its midsagittal plane in vertical orientation as shown in Figure P1 of this subpart. The lowest point on the forehead is 376.0 ±1.0 mm (14.76 ±0.04 in) from the steel impact surface. The 3.3 mm (0.13 in) diameter holes, located on either side of the dummy's head in transverse alignment with the CG, shall be used to ensure that the head transverse plane is level with respect to the impact surface.

(4) Drop the head assembly from the specified height by a means that ensures a smooth, instant release onto a rigidly supported flat horizontal steel plate which is 50.8 mm (2 in) thick and 610 mm (24 in) square. The impact surface shall be clean, dry and have a finish of not less than 203.2×10^{-6} mm (8 micro inches) (RMS) and not more than 2032.0×10^{-6} mm (80 micro inches) (RMS).

(5) Allow at least 2 hours between successive tests on the same head.

§ 572.143 Neck-headform assembly and test procedure.

(a) The neck and headform assembly (refer to §§ 572.140(a)(1)(ii) and 572.140(a)(1)(iii)) for the purposes of this test, as shown in Figures P2 and P3 of this subpart, consists of the neck molded assembly (drawing 210–2015), neck cable (drawing 210–2040), nylon shoulder bushing (drawing 9001373), upper mount plate insert (drawing 910420–048), bib simulator (drawing TE–208–050), urethane washer (drawing 210–2050), neck mounting plate (drawing TE–250–021), two jam nuts (drawing 9001336), load-moment transducer (drawing SA 572–S19), and headform (drawing TE–208–000).

(b) When the neck and headform assembly, as defined in § 572.143(a), is tested according to the test procedure in paragraph (c) of this section, it shall have the following characteristics:

(1) Flexion.

(i) Plane D, referenced in Figure P2 of this subpart, shall rotate in the direction of preimpact flight with respect to the pendulum's longitudinal centerline between 70 degrees and 82 degrees. Within this specified rotation corridor, the peak moment about the occipital condyle may not be less than 42 N-m and not more than 53 N-m.

(ii) The positive moment shall decay for the first time to 10 N-m between 60 ms and 80 ms after time zero.

(iii) The moment and rotation data channels are defined to be zero when the longitudinal centerline of the neck and pendulum are parallel.

(2) Extension.

(i) Plane D referenced in Figure P3 of this subpart shall rotate in the direction of preimpact flight with respect to the pendulum's longitudinal centerline between 83 degrees and 93 degrees. Within this specified rotation corridor, the peak moment about the occipital condyle may be not more than −43.7 N-m and not less than −53.3 N-m.

(ii) The negative moment shall decay for the first time to −10 N-m between 60 and 80 ms after time zero.

(iii) The moment and rotation data channels are defined to be zero when the longitudinal centerline of the neck and pendulum are parallel.

(c) *Test procedure.* (1) Soak the neck assembly in a controlled environment at any temperature between 20.6 and 22.2 °C (69 and 72 F) and a relative humidity between 10 and 70 percent for at least four hours prior to a test.

(2) Torque the jam nut (drawing 9001336) on the neck cable (drawing 210–2040) between 0.2 N-m and 0.3 N-m.

(3) Mount the neck-headform assembly, defined in paragraph (a) of this section, on the pendulum so the midsagittal plane of the headform is vertical and coincides with the plane of motion of the pendulum as shown in Figure P2 of this subpart for flexion and Figure P3 of this subpart for extension tests.

(4) Release the pendulum and allow it to fall freely to achieve an impact velocity of 5.50 ±0.10 m/s (18.05 + 0.40 ft/s) for flexion and 3.65 ±0.1 m/s (11.98 ±0.40 ft/s) for extension tests, measured by an accelerometer mounted on the pendulum as shown in Figure 22 of this part 572 at time zero.

(i) The test shall be conducted without inducing any torsion twisting of the neck.

(ii) Stop the pendulum from the initial velocity with an acceleration vs. time pulse which meets the velocity change as specified in Table B of this section. Integrate the pendulum acceleration data channel to obtain the velocity vs. time curve as indicated in Table B of this section.

(iii) Time-zero is defined as the time of initial contact between the pendulum striker plate and the honeycomb material. The pendulum data channel shall be zero at this time.

TABLE B—PENDULUM PULSE

Time	Flexion		Time	Extension	
ms	m/s	ft/s	ms	m/s	ft/s
10	2.0–2.7	6.6–8.9	6	1.0–1.4	3.3–4.6
15	3.0–4.0	9.8–13.1	10	1.9–2.5	6.2–8.2
20	4.0–5.1	13.1–16.7	14	2.8–3.5	9.2–11.5

§572.144 Thorax assembly and test procedure.

(a) *Thorax (upper torso) assembly (refer to §572.140(a)(1)(iv)).* The thorax consists of the upper part of the torso assembly shown in drawing 210–3000.

(b) When the anterior surface of the thorax of a completely assembled dummy (drawing 210–0000) is impacted by a test probe conforming to §572.146(a) at 6.0 ±0.1 m/s (19.7 ±0.3 ft/s) according to the test procedure in paragraph (c) of this section.

(1) Maximum sternum displacement (compression) relative to the spine, measured with the chest deflection transducer (SA–572–S50), must not be less than 32mm (1.3 in) and not more than 38mm (1.5 in). Within this specified compression corridor, the peak force, measured by the probe-mounted

accelerometer as defined in § 572.146(a) and calculated in accordance with paragraph (b)(3) of this section, shall be not less than 680 N and not more than 810 N. The peak force after 12.5 mm of sternum compression but before reaching the minimum required 32.0 mm sternum compression shall not exceed 910 N.

(2) The internal hysteresis of the ribcage in each impact, as determined from the force vs. deflection curve, shall be not less than 65 percent and not more than 85 percent. The hysteresis shall be calculated by determining the ratio of the area between the loading and unloading portions of the force deflection curve to the area under the loading portion of the curve.

(3) The force shall be calculated by the product of the impactor mass and its deceleration.

(c) *Test procedure.* The test procedure for the thorax assembly is as follows:

(1) The test dummy is clothed in cotton-polyester-based tight-fitting shirt with long sleeves and ankle-length pants whose combined weight is not more than 0.25 kg (0.55 lbs).

(2) Soak the dummy in a controlled environment at any temperature between 20.6 and 22.2 °C (69 and 72 °F) and at any relative humidity between 10 and 70 percent for at least four hours prior to a test.

(3) Seat and orient the dummy on a seating surface without back support as shown in Figure P4, with the lower limbs extended horizontally and forward, the upper arms parallel to the torso and the lower arms extended horizontally and forward, parallel to the midsagittal plane, the midsagittal plane being vertical within ±1 degree and the ribs level in the anterior-posterior and lateral directions within ±0.5 degrees.

(4) Establish the impact point at the chest midsagittal plane so that the impact point of the longitudinal centerline of the probe coincides with the dummy's mid-sagittal plane and is centered on the center of No. 2 rib within ±2.5 mm (0.1 in.) and 0.5 degrees of a horizontal plane.

(5) Impact the thorax with the test probe so that at the moment of contact the probe's longitudinal center line is within 2 degrees of a horizontal line in the dummy's midsagittal plane.

(6) Guide the test probe during impact so that there is no significant lateral, vertical or rotational movement.

(7) No suspension hardware, suspension cables, or any other attachments to the probe, including the velocity vane, shall make contact with the dummy during the test.

[65 FR 15262, Mar. 22, 2000, as amended at 66 FR 64376, Dec. 13, 2001]

§ 572.145 Upper and lower torso assemblies and torso flexion test procedure.

(a) The test objective is to determine the resistance of the lumbar spine and abdomen of a fully assembled dummy (drawing 210–0000) to flexion articulation between upper and lower halves of the torso assembly (refer to § 572.140(a)(1)(iv)).

(b)(1) When the upper half of the torso assembly of a seated dummy is subjected to a force continuously applied at the occipital condyle level through the rigidly attached adaptor bracket in accordance with the test procedure set out in paragraph (c) of this section, the lumbar spine-abdomen assembly shall flex by an amount that permits the upper half of the torso, as measured at the posterior surface of the torso reference plane shown in Figure P5 of this subpart, to translate in angular motion in the midsagittal plane 45 ±0.5 degrees relative to the vertical transverse plane, at which time the pulling force applied must not be less than 130 N (28.8 lbf) and not more than 180 N (41.2 lbf), and

(2) Upon removal of the force, the upper torso assembly returns to within 10 degrees of its initial position.

(c) *Test procedure.* The test procedure is as follows:

(1) Soak the dummy in a controlled environment at any temperature between 18.9° and 25.6 °C (66 and 78 °F) and at any relative humidity between 10 and 70 percent for at least 4 hours prior to a test.

(2) Assemble the complete dummy (with or without the lower legs) and seat it on a rigid flat-surface table, as shown in Figure P5 of this subpart.

(i) Unzip the torso jacket and remove the four ¼–20×¾″ bolts which attach

the lumbar load transducer or its structural replacement to the pelvis weldment (drawing 210–4510) as shown in Figure P5 of this subpart.

(ii) Position the matching end of the rigid pelvis attachment fixture around the lumbar spine and align it over the four bolt holes.

(iii) Secure the fixture to the dummy with the four ¼–20×¾″ bolts and attach the fixture to the table. Tighten the mountings so that the pelvis-lumbar joining surface is horizontal within ±1 deg and the buttocks and upper legs of the seated dummy are in contact with the test surface.

(iv) Attach the loading adapter bracket to the upper part of the torso as shown in Figure P5 of this subpart and zip up the torso jacket.

(v) Point the upper arms vertically downward and the lower arms forward.

(3)(i) Flex the thorax forward three times from vertical until the torso reference plane reaches 30 ±2 degrees from vertical. The torso reference plane, as shown in figure P5 of this subpart, is defined by the transverse plane tangent to the posterior surface of the upper backplate of the spine box weldment (drawing 210–8020).

(ii) Remove all externally applied flexion forces and support the upper torso half in a vertical orientation for 30 minutes to prevent it from drooping.

(4) Remove the external support and after two minutes measure the initial orientation angle of the upper torso reference plane of the seated, unsupported dummy as shown in Figure P5 of this subpart. The initial orientation of the torso reference plane may not exceed 15 degrees.

(5) Attach the pull cable at the point of load application on the adaptor bracket while maintaining the initial torso orientation. Apply a pulling force in the midsagittal plane, as shown in Figure P5 of this subpart, at any upper torso flexion rate between 0.5 and 1.5 degrees per second, until the torso reference plane reaches 45 ±0.5 degrees of flexion relative to the vertical transverse plane.

(6) Continue to apply a force sufficient to maintain 45 ±0.5 degrees of flexion for 10 seconds, and record the highest applied force during the 10-second period.

(7) [Reserved]

(8) Release all force at the loading adaptor bracket as rapidly as possible and measure the return angle with respect to the initial angle reference plane as defined in paragraph (c)(4) of this section 3 to 4 minutes after the release.

§ 572.146 Test conditions and instrumentation.

(a) The test probe for thoracic impacts, except for attachments, shall be of rigid metallic construction and concentric about its longitudinal axis. Any attachments to the impactor such as suspension hardware, and impact vanes, must meet the requirements of § 572.144(c)(7) of this part. The impactor shall have a mass of 1.70 ±0.02 kg (3.75 ±0.05 lb) and a minimum mass moment of inertia 164 kg-cm^2 (0.145 lb-in-sec^2) in yaw and pitch about the CG of the probe. One-third (⅓) of the weight of suspension cables and any attachments to the impact probe must be included in the calculation of mass, and such components may not exceed five percent of the total weight of the test probe. The impacting end of the probe, perpendicular to and concentric with the longitudinal axis of the probe, has a flat, continuous, and non-deformable 50.8 ±0.25 mm (2.00 ±0.01 inch) diameter face with an edge radius of 7.6/12.7 mm (0.3/0.5 in). The impactor shall have a 53.3 mm (2.1 in) dia. cylindrical surface extending for a minimum of 25.4 mm (1.0 in) to the rear from the impact face. The probe's end opposite to the impact face has provisions for mounting an accelerometer with its sensitive axis collinear with the longitudinal axis of the probe. The impact probe has a free air resonant frequency not less than 1000 Hz limited to the direction of the longitudinal axis of the impactor.

(b) Head accelerometers shall have the dimensions, response characteristics, and sensitive mass locations specified in drawing SA 572–S4 and be mounted in the head as shown in drawing 210–0000.

(c) The neck force-moment transducer shall have the dimensions, response characteristics, and sensitive axis locations specified in drawing SA 572–S19 and be mounted at the upper neck transducer location as shown in

drawing 210–0000. A lower neck transducer as specified in drawing SA 572–S19 is allowed to be mounted as optional instrumentation in place of part No. ATD6204, as shown in drawing 210–0000.

(d) The shoulder force transducers shall have the dimensions and response characteristics specified in drawing SA 572–S21 and be allowed to be mounted as optional instrumentation in place of part No. 210–3800 in the torso assembly as shown in drawing 210–0000.

(e) The thorax accelerometers shall have the dimensions, response characteristics, and sensitive mass locations specified in drawing SA 572–S4 and be mounted in the torso assembly in triaxial configuration at the T4 location, as shown in drawing 210–0000. Triaxial accelerometers may be mounted as optional instrumentation at T1, and T12, and in uniaxial configuration on the sternum at the midpoint level of ribs No. 1 and No. 3 and on the spine coinciding with the midpoint level of No. 3 rib, as shown in drawing 210–0000. If used, the accelerometers must conform to SA–572–S4.

(f) The chest deflection potentiometer shall have the dimensions and response characteristics specified in drawing SA–572–S50 and be mounted in the torso assembly as shown drawing 210–0000.

(g) The lumbar spine force/moment transducer may be mounted in the torso assembly as shown in drawing 210–0000 as optional instrumentation in place of part No. 210–4150. If used, the transducer shall have the dimensions and response characteristics specified in drawing SA–572–S20.

(h) The pubic force transducer may be mounted in the torso assembly as shown in drawing 210–0000 as optional instrumentation in place of part No. 921–0022–036. If used, the transducer shall have the dimensions and response characteristics specified in drawing SA–572–S18.

(i) The acetabulum force transducers may be mounted in the torso assembly as shown in drawing 210–0000 as optional instrumentation in place of part No. 210–4522. If used, the transducer shall have the dimensions and response characteristics specified in drawing SA–572–S22.

(j) The anterior-superior iliac spine transducers may be mounted in the torso assembly as shown in drawing 210–0000 as optional instrumentation in place of part No. 210–4540–1, –2. If used, the transducers shall have the dimensions and response characteristics specified in drawing SA–572–S17.

(k) The pelvis accelerometers may be mounted in the pelvis in triaxial configuration as shown in drawing 210–0000 as optional instrumentation. If used, the accelerometers shall have the dimensions and response characteristics specified in drawing SA–572–S4.

(l) The outputs of acceleration and force-sensing devices installed in the dummy and in the test apparatus specified by this part shall be recorded in individual data channels that conform to the requirements of SAE Recommended Practice J211/1, Rev. Mar 95 ''Instrumentation for Impact Tests—Part 1-Electronic Instrumentation'' (refer to § 572.140(a)(3)), with channel classes as follows:

(1) Head acceleration—Class 1000

(2) Neck

(i) Force—Class 1000

(ii) Moments—Class 600

(iii) Pendulum acceleration—Class 180

(iv) Rotation potentiometer response (if used)—CFC 60.

(3) Thorax:

(i) Rib/sternum acceleration—Class 1000

(ii) Spine and pendulum accelerations—Class 180

(iii) Sternum deflection—Class 600

(iv) Shoulder force—Class 180

(4) Lumbar:

(i) Forces—Class 1000

(ii) Moments—Class 600

(iii) Torso flexion pulling force—Class 60 if data channel is used

(5) Pelvis

(i) Accelerations—Class 1000

(ii) Acetabulum, pubic symphysis—Class 1000,

(iii) Iliac wing forces—Class 180

(m) Coordinate signs for instrumentation polarity shall conform to the Sign Convention For Vehicle Crash Testing, Surface Vehicle Information Report, SAE J1733, 1994–12 (refer to § 572.140(a)(4)).

(n) The mountings for sensing devices shall have no resonance frequency less

than 3 times the frequency range of the applicable channel class.

(o) Limb joints shall be set at 1G, barely restraining the weight of the limbs when they are extended horizontally. The force required to move a limb segment shall not exceed 2G throughout the range of limb motion.

(p) Performance tests of the same component, segment, assembly, or fully assembled dummy shall be separated in time by a period of not less than 30 minutes unless otherwise noted.

(q) Surfaces of dummy components are not painted except as specified in this part or in drawings subtended by this part.

FIGURES TO SUBPART P OF PART 572

Figure P1

HEAD DROP TEST SET-UP SPECIFICATIONS

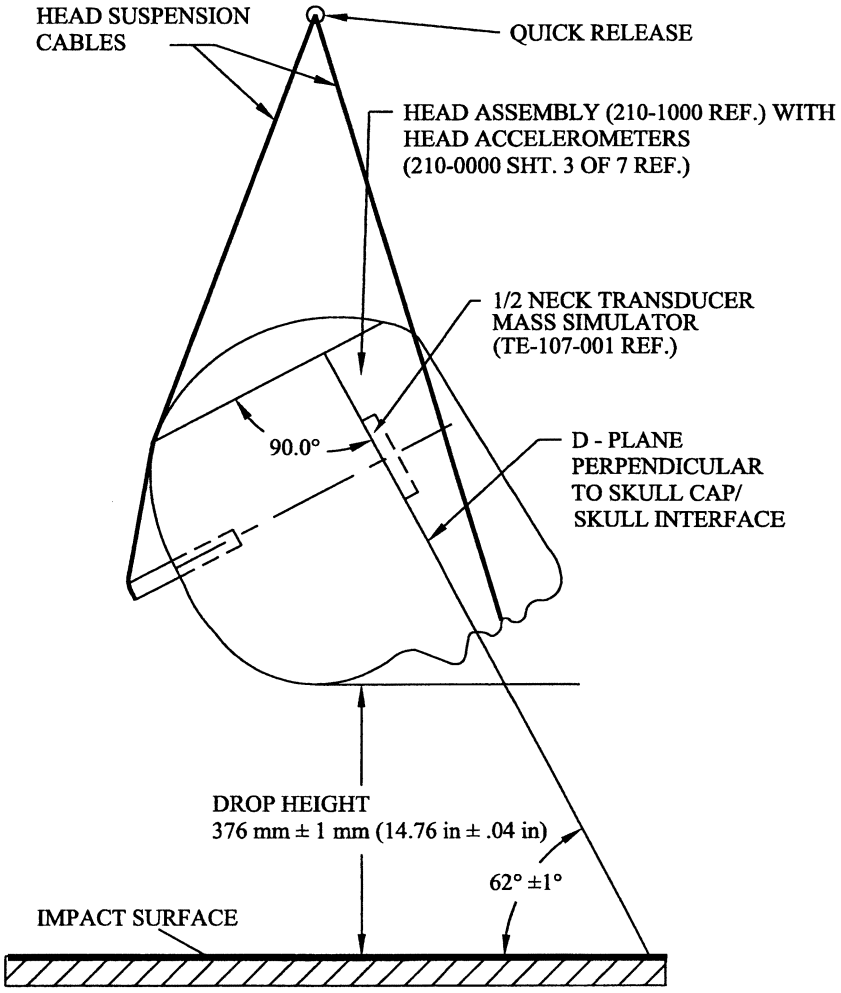

Figure P2

NECK FLEXION TEST SET-UP SPECIFICATIONS

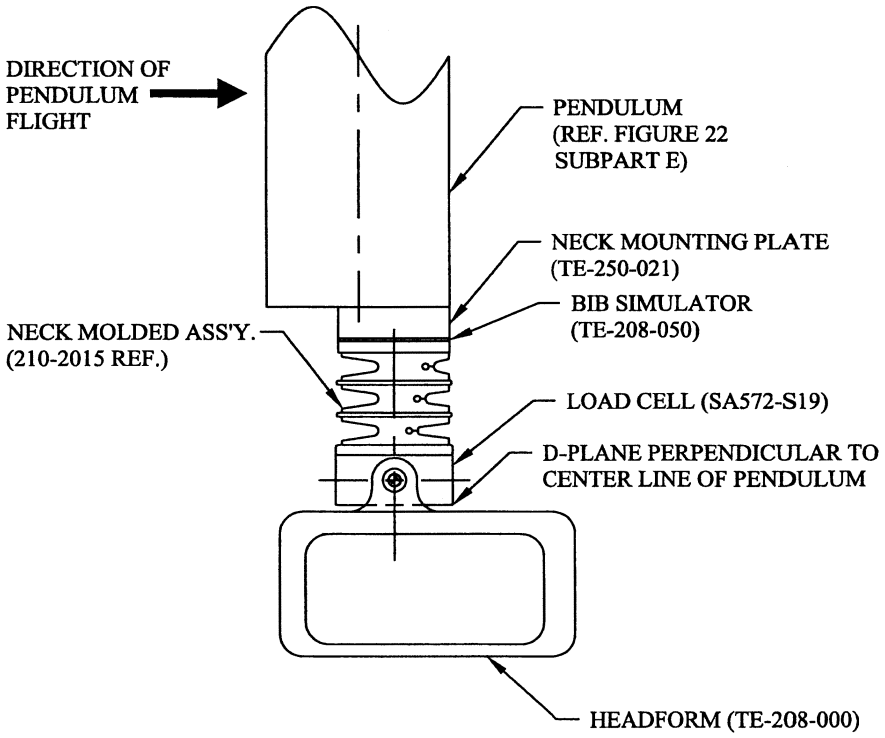

NOTE: MOUNT NECK AT LEADING EDGE OF PENDULUM TO AVOID INTERFERENCE WITH HEADFORM MOTION. PENDULUM SHOWN IN VERTICAL ORIENTATION.

Figure P3

NECK EXTENSION TEST SET-UP SPECIFICATIONS

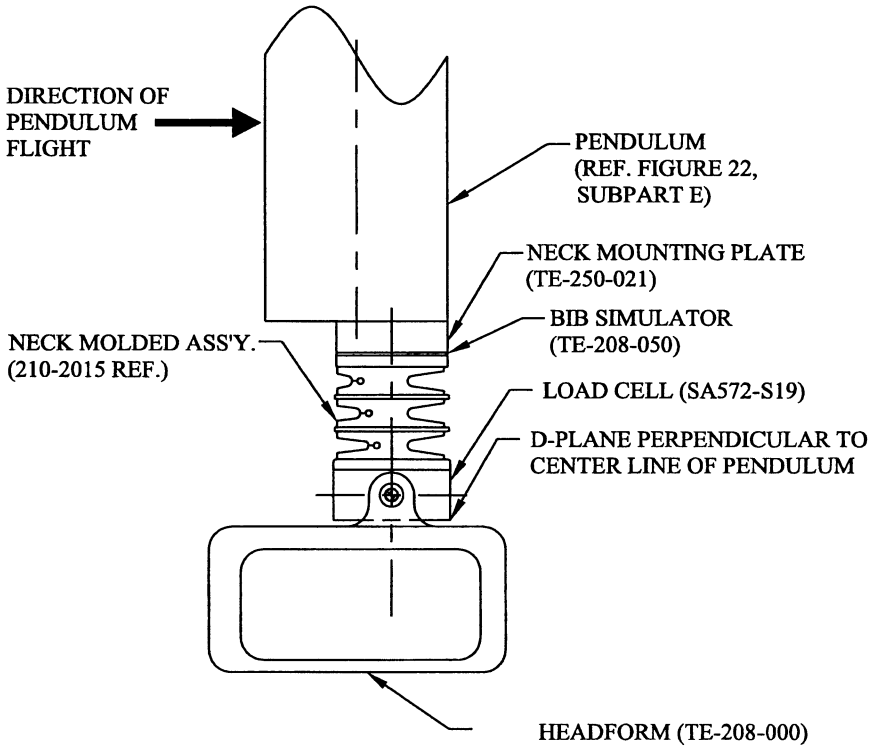

NOTE: MOUNT NECK AT LEADING EDGE OF PENDULUM TO AVOID INTERFERENCE WITH HEADFORM MOTION.
PENDULUM SHOWN IN VERTICAL ORIENTATION.

Figure P4

THORAX IMPACT TEST SET-UP SPECIFICATIONS

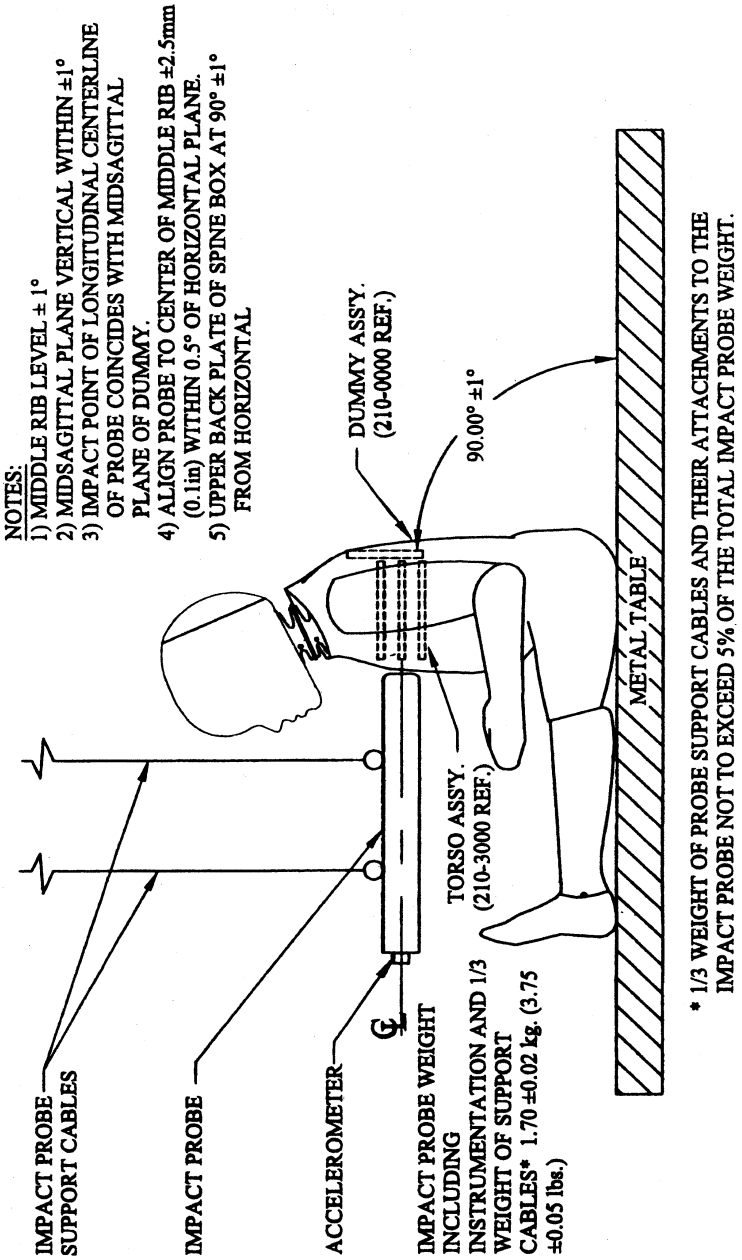

Figure P5

TORSO FLEXION TEST SET-UP SPECIFICATION

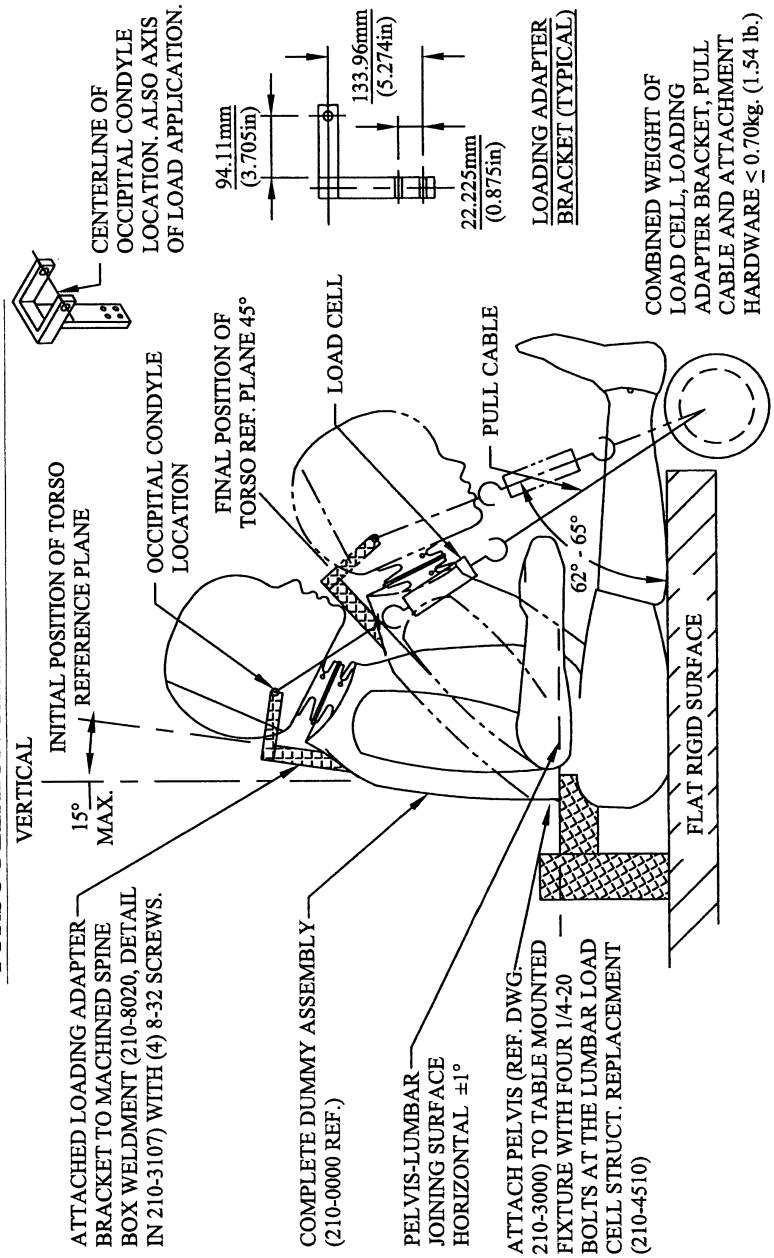

[65 FR 15262, Mar. 22, 2000, as amended at 66 FR 64376, Dec. 13, 2001]

Subpart R—CRABI 12-Month-Old Infant, Alpha Version

SOURCE: 65 FR 17188, Mar. 31, 2000, unless otherwise noted.

§ 572.150 Incorporation by reference.

(a) The following materials are incorporated by reference in this subpart R.

(1) A drawings and specifications package entitled ''Parts List and Drawings, Subpart R, CRABI 12-Month-Old Infant Crash Test Dummy (CRABI–12, Alpha version) August 2001'' and consisting of:

(i) Drawing No. 921022–001, Head Assembly, incorporated by reference in §§ 572.151, 572.152, 572.154, and 572.155;

(ii) Drawing No. 921022–041, Neck Assembly, incorporated by reference in §§ 572.151, 572.153, 572.154, and 572.155;

(iii) Drawing No. TE–3200–160, Headform, incorporated by reference in §§ 572.151 and 572.153;

(iv) Drawing No. 921022–060, Torso Assembly, incorporated by reference in §§ 572.151, 572.154, and 572.155;

(v) Drawing No. 921022–055, Leg Assembly, incorporated by reference in §§ 572.151, and 572.155 as part of a complete dummy assembly;

(vi) Drawing No. 921022–054, Arm Assembly, incorporated by reference in §§ 572.151, and 572.155 as part of the complete dummy assembly;

(2) A procedures manual entitled ''Procedures for Assembly, Disassembly and Inspection (PADI) Subpart R, CRABI 12-Month-Old Infant Crash Test Dummy (CRABI–12, Alpha version) August 2001'' incorporated by reference in § 572.155;

(3) SAE Recommended Practice J211/1, Rev. Mar95 ''Instrumentation for Impact Tests—Part 1—Electronic Instrumentation'', incorporated by reference in § 572.155;

(4) SAE J1733 1994–12 ''Sign Convention for Vehicle Crash Testing'', incorporated by reference in § 572.155.

(b) The Director of the Federal Register approved those materials incorporated by reference in accordance with 5 U.S.C. 552(a) and 1 CFR Part 51. Copies of the materials may be inspected at NHTSA's Docket Section, 400 Seventh Street S.W., room 5109, Washington, DC, or at the National Archives and Records Administration (NARA). For information on the availability of this material at NARA, call 202–741–6030, or go to: *http://www.archives.gov/federal_register/code_of_federal_regulations/ibr_locations.html.*

(c) The incorporated materials are available as follows:

(1) The drawings and specifications package referred to in paragraph (a)(1) of this section and the procedures manual referred to in paragraph (a)(2) of this section are available from Reprographic Technologies, 9000 Virginia Manor Road, Beltsville, MD 20705 (301) 419–5070.

(2) The SAE materials referred to paragraphs (a)(3) and (a)(4) of this section are available from the Society of Automotive Engineers, Inc., 400 Commonwealth Drive, Warrendale, PA 15096.

[65 FR 17188, Mar. 31, 2000, as amended at 66 FR 45784, Aug. 30, 2001]

§ 572.151 General description.

(a) The 12-month-old-infant crash test dummy is described by drawings and specifications containing the following materials:

(1) Technical drawings and specifications package 921022–000 (refer to § 572.150(a)(1)), the titles of which are listed in Table A of this section;

(2) Procedures for Assembly, Disassembly and Inspection document (PADI) (refer to § 572.150(a)(2)).

(b) The dummy consists of the component assemblies set out in the following Table A:

TABLE A

Component assembly	Drawing number
Head Assembly	921022–001.
Neck Assembly (complete)	921022–041.
Torso Assembly	921022–060.
Leg Assembly	921022–055 R&L.
Arm Assembly	921022–054 R&L.

(c) Adjacent segments of the dummy are joined in a manner such that, except for contacts existing under static conditions, there is no contact between metallic elements throughout the range of motion or under simulated crash impact conditions.

(d) The structural properties of the dummy are such that the dummy shall

conform to this Subpart in every respect before its use in any test under this chapter.

§ 572.152 Head assembly and test procedure.

(a) The head assembly (refer to § 572.150(a)(1)(i)) for this test consists of the assembly (drawing 921022–001), triaxial mount block (SA572–80), and 3 accelerometers (drawing SA572–S4).

(b) *Frontal and rear impact.* (1) Frontal impact. When the head assembly in paragraph (a) of this section is dropped from a height of 376.0 ±1.0 mm (14.8 ±0.04 in) in accordance with paragraph (c)(3)(i) of this section, the peak resultant acceleration measured at the head CG shall not be less than 100 g or more than 120 g. The resultant acceleration vs. time history curve shall be unimodal, and the oscillations occurring after the main pulse shall be less than 17 percent of the peak resultant acceleration. The lateral acceleration shall not exceed ±15 g's.

(2) *Rear impact.* When the head assembly in paragraph (a) of this section is dropped from a height of 376.0 ±1.0 mm (14.8 ±0.04 in) in accordance with paragraph (c)(3)(ii) of this section, the peak resultant acceleration measured at the head CG shall be not less than 55 g and not more than 71 g. The resultant acceleration vs. time history curve shall be unimodal, and the oscillations occurring after the main pulse shall be less than 17 percent of the peak resultant acceleration. The lateral acceleration shall not exceed ±15 g's.

(c) *Head test procedure.* The test procedure for the head is as follows:

(1) Soak the head assembly in a controlled environment at any temperature between 18.9 and 25.6 °C (66 and 78 °F) and at any relative humidity between 10 and 70 percent for at least four hours prior to a test. These temperature and humidity levels shall be maintained throughout the entire testing period specified in this section.

(2) Before the test, clean the impact surface of the head skin and the steel impact plate surface with isopropyl alcohol, trichlorethane, or an equivalent. Both impact surfaces shall be clean and dry for testing.

(3)(i) For a frontal impact test, suspend the head assembly with its midsagittal plane in vertical orientation as shown in Figure R1 of this subpart. The lowest point on the forehead is 376.0 ±1.0 mm (14.8 ±0.04 in) from the impact surface. The 3.30 mm (0.13 in) diameter holes located on either side of the dummy's head are used to ensure that the head is level with respect to the impact surface. The angle between the lower surface plane of the neck transducer mass simulator (drawing 910420–003) and the plane of the impact surface is 45 ±1 degrees.

(ii) For a rear impact test, suspend the head assembly with its midsagittal plane in vertical orientation as shown in Figure R2 of this subpart. The lowest point on the back of the head is 376.0 ±1.0 mm (14.8 ±0.04 in) from the impact surface. The 3.30 mm (0.13 in) diameter holes located on either side of the dummy's head are used to ensure that the head is level with respect to the impact surface. The angle between the lower surface plane of the neck transducer structural replacement (drawing 910420–003) and the impact surface is 90 ±1 degrees.

(4) Drop the head assembly from the specified height by a means that ensures a smooth, instant release onto a rigidly supported flat horizontal steel plate which is 50.8 mm (2 in) thick and 610 mm (24 in) square. The impact surface shall be clean, dry and have a micro finish of not less than 203.2×10^{-6} mm (8 micro inches) (RMS) and not more than 2032.0×10^{-6} mm (80 micro inches) (RMS).

(5) Allow at least 2 hours between successive tests of the head assembly at the same impact point. For head impacts on the opposite side of the head, the 30-minute waiting period specified in § 572.155(m) does not apply.

§ 572.153 Neck-headform assembly and test procedure.

(a) The neck and headform assembly (refer to §§ 572.150(a)(1)(ii) and 572.150(a)(1)(iii)) for the purposes of this test consists of parts shown in CRABI neck test assembly (drawing TE–3200–100);

(b) When the neck and headform assembly, as defined in § 572.153(a), is tested according to the test procedure in § 572.153(c), it shall have the following characteristics:

(1) *Flexion*. (i) Plane D referenced in Figure R3 of this subpart shall rotate in the direction of pre-impact flight with respect to the pendulum's longitudinal centerline not less than 75 degrees and not more than 86 degrees. Within this specified rotation corridor, the peak positive moment about the occipital condyles shall be not less than 36 N-m (26.6 ft-lbf) and not more than 45 N-m (33.2 ft-lbf).

(ii) The positive moment about the occipital condyles shall decay for the first time to 5 N-m (3.7 ft-lbf) between 60 ms and 80 ms after time zero.

(iii) The moment about the occipital condyles shall be calculated by the following formula: Moment (N-m) = My − (0.005842m) × (Fx), where My is the moment about the y-axis, Fx is the shear force measured by the neck transducer (drawing SA572 –S23) and 0.005842m is the distance from the point at which the load cell measures the force to the occipital condyle.

(2) *Extension*. (i) Plane D referenced in Figure R4 of this subpart shall rotate in the direction of preimpact flight with respect to the pendulum's longitudinal centerline not less than 80 degrees and not more than 92 degrees. Within the specified rotation corridor, the peak negative moment about the occipital condyles shall be not more than −12 Nm (−8.9 ft-lbf) and not less than −23 N-m (−17.0 ft-lbf) within the minimum and maximum rotation interval.

(ii) The negative moment about the occipital condyles shall decay for the first time to −5 Nm (−3.7 lbf-ft) between 76 ms and 90 ms after time zero.

(iii) The moment about the occipital condyles shall be calculated by the following formula: Moment (N-m) = My − (0.005842m) × (Fx), where My is the moment about the y-axis, Fx is the shear force measured by the neck transducer (drawing SA572 –S23) and 0.005842m is the distance from the point at which the load cell measures the force to the occipital condyle.

(c) *Test procedure*. (1) Soak the neck assembly in a controlled environment at any temperature between 20.6 and 22.2 °C (69 and 72 °F) and at any relative humidity between 10 and 70 percent for at least four hours prior to a test. These temperature and humidity levels shall be maintained throughout the testing period specified in this section.

(2) Torque the jam nut (drawing 9001336) on the neck cable (drawing ATD–6206) to 0.2 to 0.3 Nm (2–3 in-lbf).

(3) Mount the neck-headform assembly, defined in paragraph (b) of this section, on the pendulum so the midsagittal plane of the headform is vertical and coincides with the plane of motion of the pendulum as shown in Figure R3 for flexion and Figure R4 for extension tests.

(i) The moment and rotation data channels are defined to be zero when the longitudinal centerline of the neck and pendulum are parallel.

(ii) The test shall be conducted without inducing any torsion of the neck.

(4) Release the pendulum and allow it to fall freely to achieve an impact velocity of 5.2 ±0.1 m/s (17.1 ±0.3 ft/s) for flexion and 2.5 ±0.1 m/s (8.2 ±0.3 ft/s) for extension measured at the center of the pendulum accelerometer at the instant of contact with the honeycomb.

(i) Time-zero is defined as the time of initial contact between the pendulum striker plate and the honeycomb material. The pendulum data channel shall be defined to be zero at this time.

(ii) Stop the pendulum from the initial velocity with an acceleration vs. time pulse which meets the velocity change as specified in the following table. Integrate the pendulum acceleration data channel to obtain the velocity vs. time curve as indicated in Table B:

TABLE B—PENDULUM PULSE

Time	Flexion		Time	Extension	
m/s	m/s	ft/s	ms	m/s	ft/s
10	1.6–2.3	5.2–7.5	6	0.8–1.2	2.6–3.9
20	3.4–4.2	11.2–13.8	10	1.5–2.1	4.9–6.9
25	4.3–5.2	14.1–17.1	14	2.2–2.9	7.2–9.5

§ 572.154 Thorax assembly and test procedure.

(a) Thorax Assembly (refer to § 572.150(a)(1)(iv)) . The thorax consists of the part of the torso assembly shown in drawing 921022–060.

(b) When the thorax of a completely assembled dummy (drawing 921022–000) is impacted by a test probe conforming to § 572.155(a) at 5.0 ±0.1m/s (16.5 ±0.3 ft/s) according to the test procedure in paragraph (c) of this section, the peak force, measured by the impact probe in accordance with paragraph § 572.155(a), shall be not less than 1514 N (340.7 lbf) and not more than 1796 N (404.1 lbf).

(c) *Test procedure.* (1) Soak the dummy in a controlled environment at any temperature between 20.6 and 22.2 °C (69 and 72 °F) and at any relative humidity between 10 and 70 percent for at least four hours prior to a test. These temperature and humidity levels shall be maintained throughout the entire testing period specified in this section.

(2) The test dummy is clothed in a cotton-polyester based tight fitting sweat shirt with long sleeves and ankle long pants whose combined weight is not more than 0.25 kg (.55 lbs).

(3) Seat and orient the dummy on a level seating surface without back support as shown in Figure R5 of this subpart, with the lower limbs extended forward, parallel to the midsagittal plane and the arms 0 to 5 degrees forward of vertical. The dummy's midsagittal plane is vertical within ±/1 degree and the posterior surface of the upper spine box is aligned at 90 ±/1 degrees from the horizontal. (Shim material may be used under the upper legs to maintain the dummy's specified spine box surface alignment).

(4) Establish the impact point at the chest midsagittal plane so that the impact point of the longitudinal centerline of the probe coincides with the dummy's midsagittal plane, is centered on the torso 196 ±/2.5 mm (7.7 ±/0.1 in) vertically from the plane of the seating surface, and is within 0.5 degrees of a horizontal plane.

(5) Impact the thorax with the test probe so that at the moment of contact the probe's longitudinal center line falls within 2 degrees of a horizontal line in the dummy's midsagittal plane.

(6) Guide the test probe during impact so that there is no significant lateral, vertical or rotational movement.

(7) No suspension hardware, suspension cables, or any other attachments to the probe, including the velocity vane, shall make contact with the dummy during the test.

[65 FR 17188, Mar. 31, 2000, as amended at 66 FR 45784, Aug. 30, 2001]

§ 572.155 Test conditions and instrumentation.

(a) The test probe for thoracic impacts, except for attachments, shall be of rigid metallic construction and concentric about its longitudinal axis. Any attachments to the impactor, such as suspension hardware, impact vanes, etc., must meet the requirements of § 572.154(c)(7). The impactor shall have a mass of 2.86 ±0.02 kg (6.3 ±0.05 lbs) and a minimum mass moment of inertia of 164 kg-cm^2 (0.145 lb-in-sec^2) in yaw and pitch about the CG of the probe. One-third of the weight of suspension cables and any attachments to the impact probe must be included in the calculation of mass, and such components may not exceed five percent of the total weight of the test probe. The impacting end of the probe, perpendicular to and concentric with the longitudinal axis of the probe, has a flat, continuous, and non-deformable 101.6 ±0.25 mm (4.00 ±0.01 in) diameter face with an edge radius of 7.6/12.7 mm (0.3/0.5 in). The impactor shall have a 101–103 mm (4–4.1 in) diameter cylindrical surface extending for a minimum of 12.5 mm (0.5 in) to the rear from the impact face. The probe's end opposite to the impact face has provisions for mounting an accelerometer with its sensitive axis collinear with the longitudinal axis of the probe. The impact probe shall have a free air resonant frequency of not less than 1000 Hz measured in line with the longitudinal axis of the impactor, using the test method shown in the Procedures for Assembly, Disassembly and Inspection (PADI) document referenced in § 572.151.

(b) Head accelerometers shall have the dimensions, response characteristics, and sensitive mass locations specified in drawing SA572–S4 and be mounted in the head as shown in drawing 921022–000.

(c) The neck force-moment transducer shall have the dimensions, response characteristics, and sensitive axis locations specified in drawing SA572–S23 and shall be mounted for testing as shown in drawing 921022–000 and in figures R3 and R4 of this subpart.

(d) The shoulder force transducers shall have the dimensions and response characteristics specified in drawing SA572–S25 and are allowed to be mounted as optional instrumentation in place of part No. 921022–022 in the torso assembly as shown in drawing 921022–000.

(e) The thorax accelerometers shall have the dimensions, response characteristics, and sensitive mass locations specified in drawing SA572–S4 and be mounted in the torso assembly in triaxial configuration as shown in drawing 921022–000.

(f) The lumbar spine and lower neck force/moment transducer shall have the dimensions and response characteristics specified in drawing SA572–S23 and are allowed to be mounted as optional instrumentation in the torso assembly in place of part No. 910420–003 as shown in drawing 921022–000.

(g) The pelvis accelerometers shall have the dimensions, response characteristics, and sensitive mass locations specified in drawing SA572–S4 and are allowed to be mounted as optional instrumentation in the pelvis in triaxial configuration as shown in drawing 921022–000.

(h) The pubic force transducer shall have the dimensions and response characteristics specified in drawing SA572–S24 and is allowed to be mounted as optional instrumentation in place of part No. 921022–050 in the torso assembly as shown in drawing 921022–000.

(i) The outputs of acceleration and force-sensing devices installed in the dummy and in the test apparatus specified by this part are recorded in individual data channels that conform to the requirements of SAE Recommended Practice J211/1, Rev. Mar95 ''Instrumentation for Impact Tests—Part 1—Electronic Instrumentation'' (refer to § 572.150(a)(3)), with channel classes as follows:

(1) Head and headform acceleration—Class 1000.

(2) Neck :

(i) Forces—Class 1000;

(ii) Moments—Class 600;

(iii) Pendulum acceleration—Class 180;

(iv) Rotation potentiometer response (if used)—CFC 60.

(3) Thorax:

(i) Spine and pendulum accelerations—Class 180;

(ii) Shoulder forces—Class 600;

(4) Lumbar:

(i) Forces—Class 1000;

(ii) Moments—Class 600;

(5) Pelvis:

(i) Accelerations—Class 1000;

(ii) Pubic—Class 1000.

(j) Coordinate signs for instrumentation polarity shall conform to SAE J1733, 1994–12, ''Sign Convention For Vehicle Crash Testing, Surface Vehicle Information Report,'' (refer to § 572.150(a)(4)).

(k) The mountings for sensing devices shall have no resonance frequency within a range of 3 times the frequency range of the applicable channel class.

(l) Limb joints shall be set at 1 g, barely restraining the weight of the limb when it is extended horizontally. The force required to move a limb segment shall not exceed 2 g throughout the range of limb motion.

(m) Performance tests of the same component, segment, assembly, or fully assembled dummy shall be separated in time by period of not less than 30 minutes unless otherwise noted.

(n) Surfaces of dummy components may not be painted except as specified in this subpart or in drawings referenced in § 572.150.

[65 FR 17188, Mar. 31, 2000, as amended at 66 FR 45784, Aug. 30, 2001]

FIGURES TO SUBPART R OF PART 572

Figure R 1
FRONTAL HEAD DROP TEST SET-UP SPECIFICATIONS

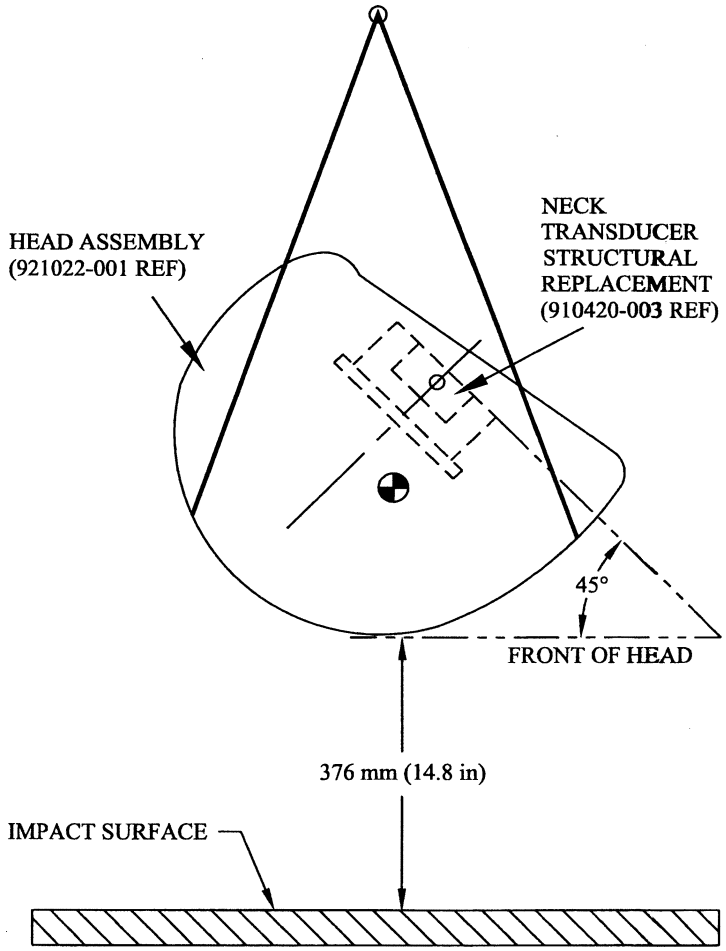

Figure R 2
REAR HEAD DROP TEST SET-UP SPECIFICATIONS

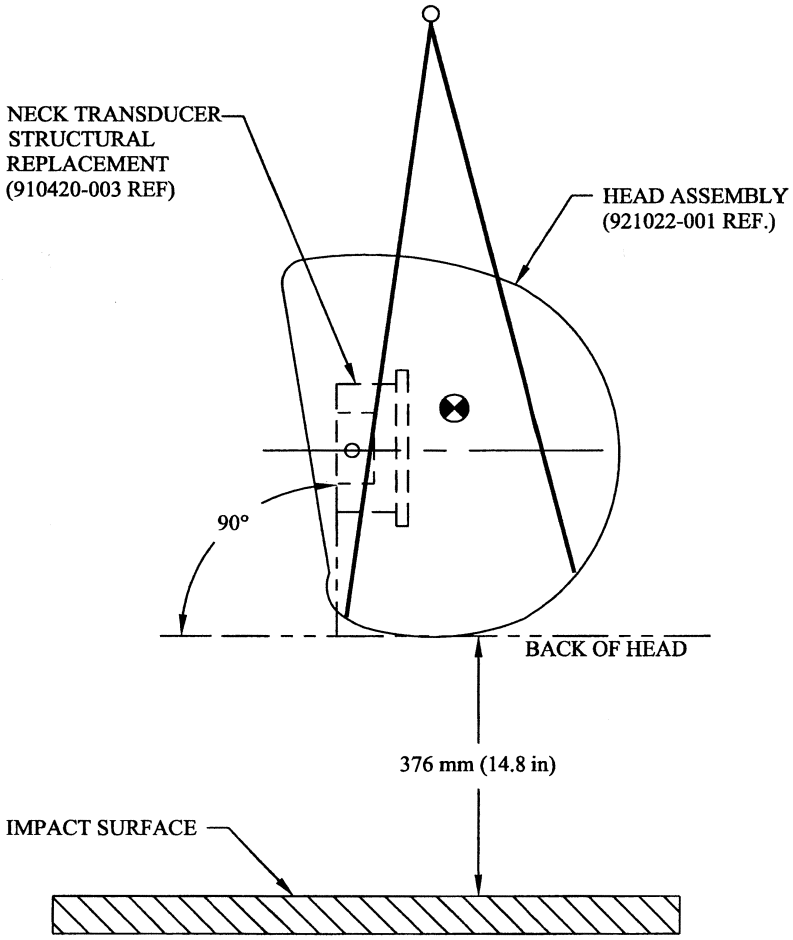

Figure R3
NECK FLEXION TEST SET-UP SPECIFICATIONS

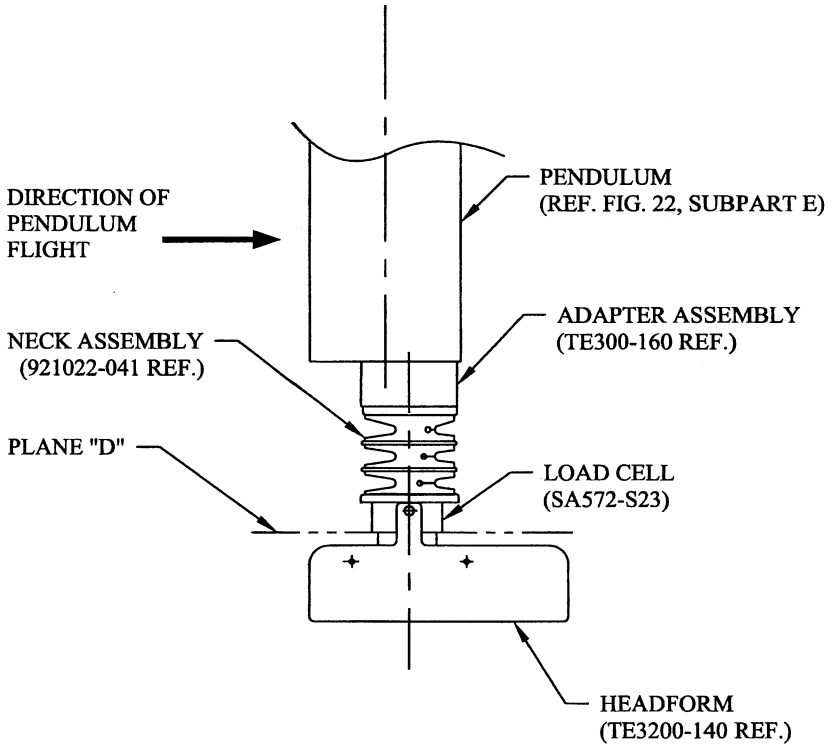

NOTE: MOUNT NECK AT LEADING EDGE OF PENDULUM TO AVOID INTERFERENCE.

Figure R4
NECK EXTENSION TEST SET-UP SPECIFICATIONS

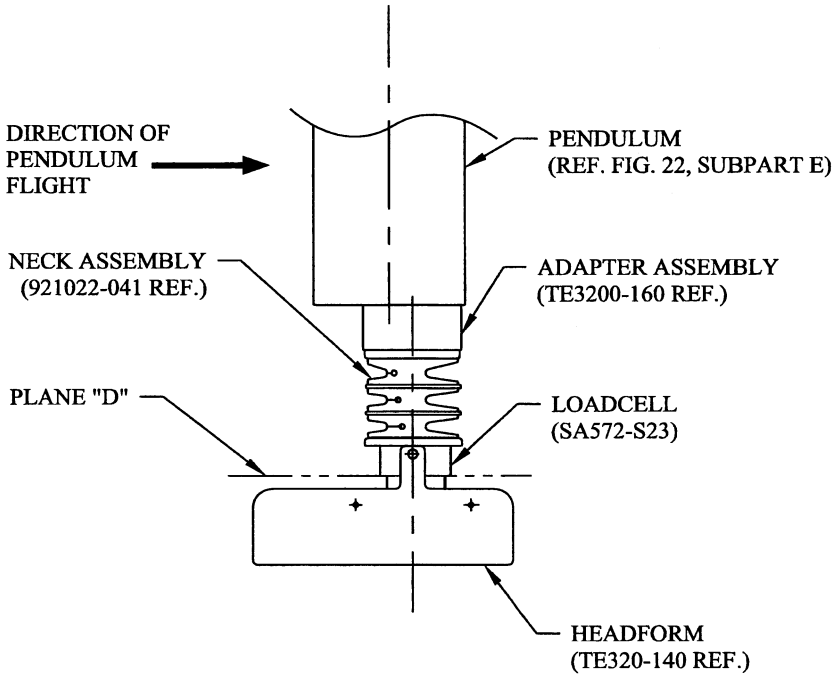

NOTE: MOUNT NECK AT LEADING EDGE OF PENDULUM TO AVOID INTERFERENCE.

Figure R 5
THORAX IMPACT TEST SET-UP SPECIFICATIONS

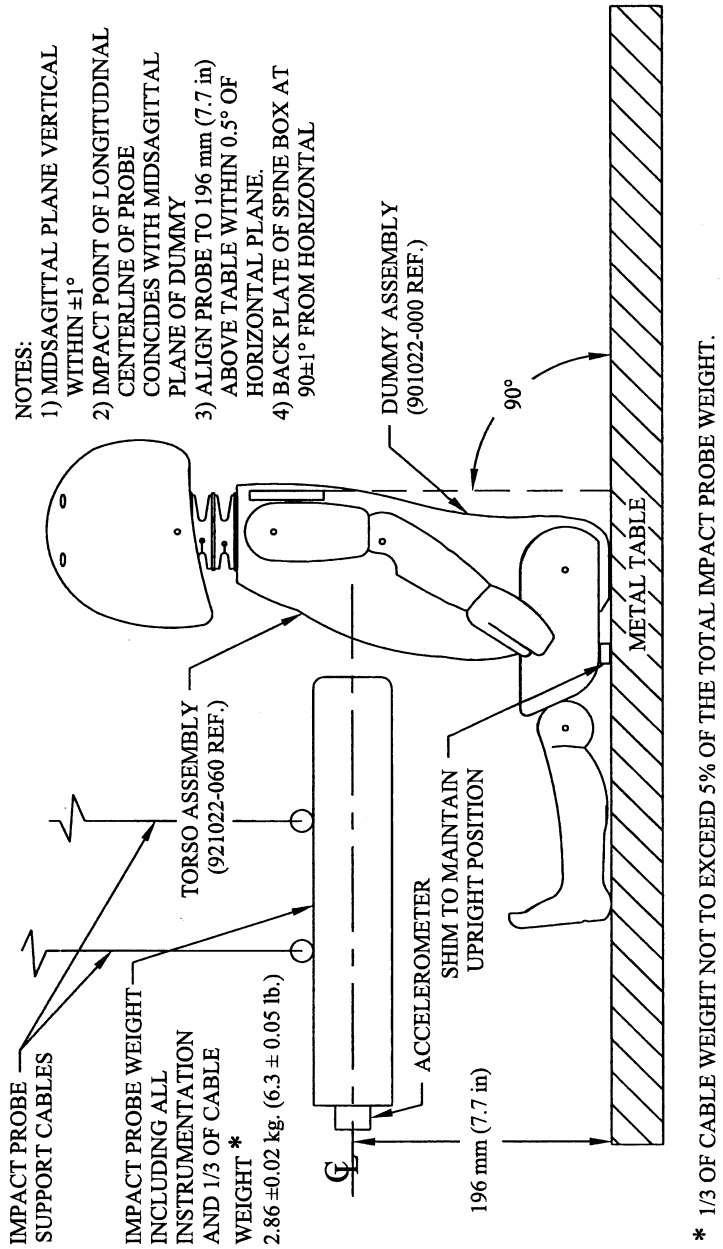

Subpart S—Hybrid III Six-Year-Old Weighted Child Test Dummy

SOURCE: 69 FR 42602, July 16, 2004, unless otherwise noted.

§ 572.160 Incorporation by reference.

(a) The following materials are hereby incorporated into this subpart S by reference:

(1) A drawings and specifications package entitled ''Parts List and Drawings, Part 572 Subpart S, Hybrid III Weighted Six-Year Old Child Test Dummy (H-III6CW, Alpha Version) April 13, 2004'', incorporated by reference in § 572.161 and consisting of:

(i) Drawing No. 167–0000, Complete Assembly, incorporated by reference in § 572.161;

(ii) Drawing No. 167–2000, Upper Torso Assembly, incorporated by reference in §§ 572.161, 572.164, and 572.165 as part of a complete dummy assembly;

(iii) Drawing No. 167–2020 Revision A, dated December 8, 2005, Spine Box Weight, incorporated by reference in §§ 572.161 and 572.165 as part of a complete dummy assembly;

(iv) Drawing No. 167–3000, Lower Torso Assembly, incorporated by reference in §§ 572.161, and 572.165 as part of a complete dummy assembly;

(v) Drawing No. 167–3010 Revision A, dated December 8, 2005, Lumbar Weight Base, incorporated by reference in §§ 572.161 and 572.165 as part of a complete dummy assembly; and

(vi) The Hybrid III Weighted Six-Year-Old Child Parts/Drawing List, incorporated by reference in § 572.161.

(2) A procedures manual entitled ''Procedures for Assembly, Disassembly, and Inspection (PADI) of the Hybrid III Six-Year-Old Weighted Child Test Dummy (H-III6CW), April 2004,'' incorporated by reference in § 572.161;

(3) The Director of the Federal Register approved those materials incorporated by reference in accordance with 5 U.S.C. 552(a) and 1 CFR part 51. Copies of the materials may be inspected at NHTSA's Technical Reference Library, 400 Seventh Street, SW., room 5109, Washington, DC, or at the National Archives and Records Administration (NARA). For information on the availability of this material at NARA, call 202–741–6030, or go to: *http://www.archives.gov/federal_register/code_of_federal_regulations/ibr_locations.html.*

(b) The incorporated materials are available as follows:

(1) The Drawings and Specifications for the Hybrid III Six-Year-Old Weighted Child Test Dummy referred to in paragraph (a)(1) of this section are available in electronic format through the NHTSA docket center and in paper format from Leet-Melbrook, Division of New RT, 18810 Woodfield Road, Gaithersburg, MD 20879, (301) 670–0090.

(2) [Reserved]

[69 FR 42602, July 16, 2004, as amended at 70 FR 77338, Dec. 30, 2005]

§ 572.161 General description.

(a) The Hybrid III Six-Year-Old Weighted Child Test Dummy is defined by drawings and specifications containing the following materials:

(1) ''Parts List and Drawings, Part 572 Subpart S, Hybrid III Weighted Six-Year Old Child Test Dummy (H-III6CW, Alpha Version) April 13, 2004'' (incorporated by reference, see § 572.160),

(2) The head, neck, arm, and leg assemblies specified in 49 CFR 572 subpart N; and

(3) ''Procedures for Assembly, Disassembly, and Inspection (PADI) of the Hybrid III Six-Year-Old Weighted Child Test Dummy, April 2004'' (incorporated by reference, see § 572.160).

TABLE A

Component assembly [1]	Drawing No.
Complete assembly	167–0000.
Upper torso assembly	167–2000.
Spine box weight	167–2020 Rev. A.
Lower torso assembly	167–3000.
Lumbar weight base	167–3010 Rev. A.

[1] Head, neck, arm, and leg assemblies are as specified in 49 CFR 572 subpart N.

(b) Adjacent segments are joined in a manner such that except for contacts existing under static conditions, there is no contact between metallic elements throughout the range of motion or under simulated crash impact conditions.

(c) The structural properties of the dummy are such that the dummy must conform to Subpart S in every respect and Subpart N as applicable, before use

in any test similar to those specified in Standard 208, ''Occupant Crash Protection'' (49 CFR 571.208), and Standard 213, ''Child Restraint Systems'' (49 CFR 571.213).

[69 FR 42602, July 16, 2004, as amended at 70 FR 77338, Dec. 30, 2005]

§ 572.162 Head assembly and test procedure.

The head assembly is assembled and tested as specified in 49 CFR 572.122 (Subpart N).

§ 572.163 Neck assembly and test procedure.

The neck assembly is assembled and tested as specified in 49 CFR 572.123 (Subpart N).

§ 572.164 Thorax assembly and test procedure.

(a) *Thorax (upper torso) assembly*. The thorax consists of the part of the torso assembly shown in drawing 167–2000 (incorporated by reference, see § 572.160).

(b) When the anterior surface of the thorax of a completely assembled dummy (drawing 167–2000) that is seated as shown in Figure S1 is impacted by a test probe conforming to 49 CFR 572.127(a) at 6.71 ±0.12 m/s (22.0 ±0.4 ft/s) according to the test procedure specified in 49 CFR 572.124(c):

(1) The maximum sternum displacement relative to the spine, measured with chest deflection transducer (specified in 49 CFR 572.124(b)(1)), must be not less than 38.0 mm (1.50 in) and not more than 46.0 mm (1.80 in). Within this specified compression corridor, the peak force, measured by the probe in accordance with 49 CFR 572.127, must be not less than 1205 N (270.9 lbf) and not more than 1435 N (322.6 lbf). The peak force after 12.5 mm (0.5 in) of sternum displacement, but before reaching the minimum required 38.0 mm (1.46 in) sternum displacement limit, must not exceed an upper limit of 1500 N.

(2) The internal hysteresis of the ribcage in each impact as determined by the plot of force vs. deflection in paragraph (b)(1) of this section must be not less than 65 percent but not more than 85 percent.

(c) *Test procedure*. The thorax assembly is tested as specified in 49 CFR 572.124(c).

§ 572.165 Upper and lower torso assemblies and torso flexion test procedure.

(a) *Upper/lower torso assembly*. The test objective is to determine the stiffness effects of the lumbar spine (specified in 49 CFR 572.125(a)), including cable (specified in 49 CFR 572.125(a)), mounting plate insert (specified in 49 CFR 572.125(a)), nylon shoulder bushing (specified in 49 CFR 572.125(a)), nut (specified in 49 CFR 572.125(a)), spine box weighting plates (drawing 167–2020 Revision A), lumbar base weight (drawing 167–3010 Revision A), and abdominal insert (specified in 49 CFR 572.125(a)), on resistance to articulation between the upper torso assembly (drawing 167–2000) and the lower torso assembly (drawing 167–3000). Drawing Nos. 167–2000, 167–2020 Revision A, 167–3000, and 167–3010 Revision A, are incorporated by reference, see § 572.160.

(b)(1) When the upper torso assembly of a seated dummy is subjected to a force continuously applied at the head to neck pivot pin level through a rigidly attached adaptor bracket as shown in Figure S2 according to the test procedure set out in 49 CFR 572.125(c), the lumbar spine-abdomen assembly must flex by an amount that permits the upper torso assembly to translate in angular motion until the machined surface of the instrument cavity at the back of the thoracic spine box is at 45 ± 0.5 degrees relative to the transverse plane, at which time the force applied as shown in Figure S2 must be within 88.6 N ± 25 N (20.0 lbf ± 5.6 lbf), and

(2) Upon removal of the force, the torso assembly must return to within 9 degrees of its initial position.

(c) *Test procedure*. The upper and lower torso assemblies are tested as specified in 49 CFR 572.125(c), except that in paragraph (c)(5) of that section, the initial torso orientation angle may not exceed 32 degrees.

[69 FR 42602, July 16, 2004, as amended at 70 FR 77338, Dec. 30, 2005]

§ 572.166 Knees and knee impact test procedure.

The knee assembly is assembled and tested as specified in 49 CFR 572.126 (Subpart N).

§ 572.167 Test conditions and instrumentation.

The test conditions and instrumentation are as specified in 49 CFR 572.127 (Subpart N).

FIGURES TO SUBPART S OF PART 572

FIGURE S1
THORAX IMPACT TEST SET-UP SPECIFICATIONS

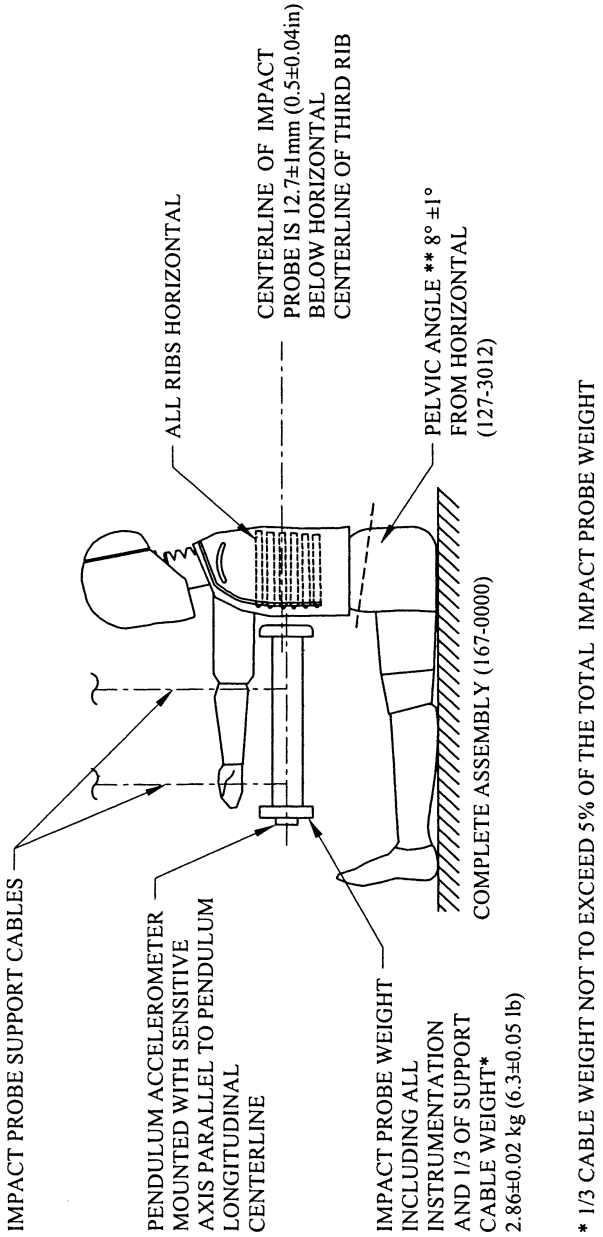

* 1/3 CABLE WEIGHT NOT TO EXCEED 5% OF THE TOTAL IMPACT PROBE WEIGHT
** PELVIS LUMBAR JOINING SURFACE

FIGURE S2
TORSO FLEXION TEST SET-UP SPECIFICATIONS

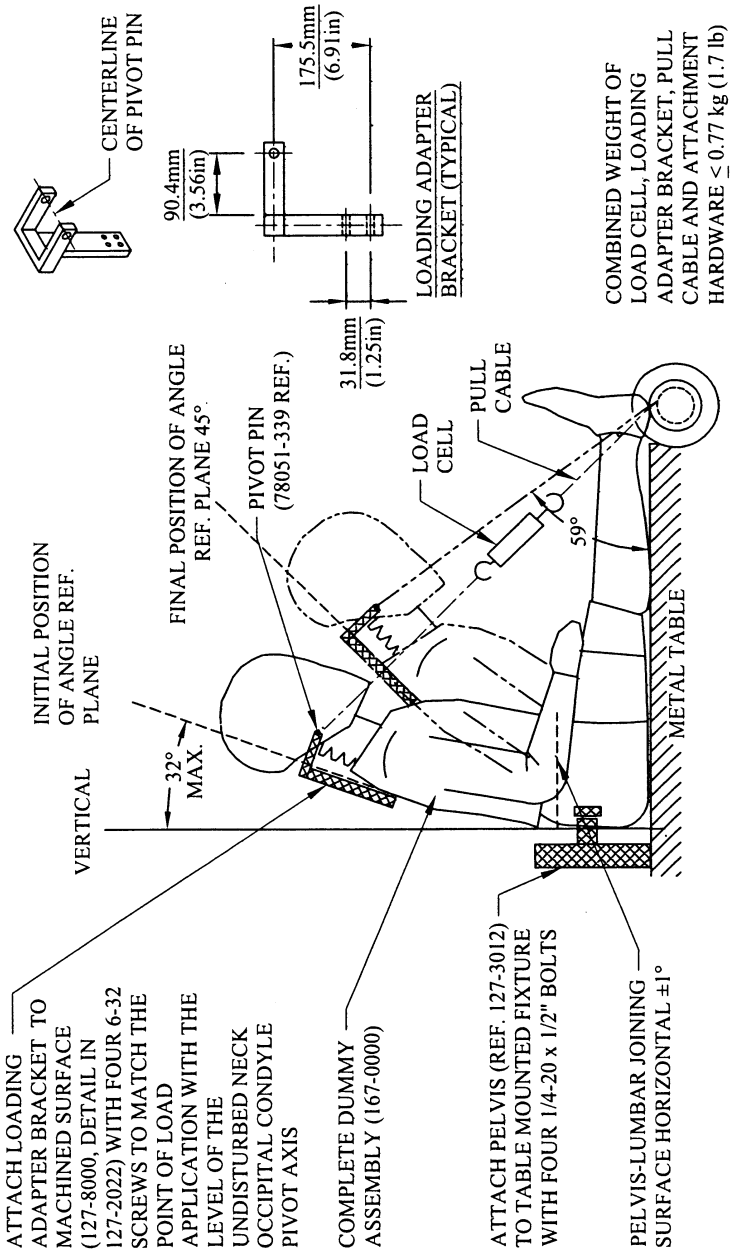

Subpart T [Reserved]

Subpart U, ES–2re Side Impact Crash Test Dummy, 50th Percentile Adult Male

SOURCE: 71 FR 75331, Dec. 14, 2006, unless otherwise noted.

§ 572.180 Incorporated materials.

(a) The following materials are hereby incorporated into this Subpart by reference:

(1) A parts/drawing list entitled, ''Parts/Drawings List, Part 572 Subpart U, Eurosid 2 with Rib Extensions (ES2re), February 2008,''

(2) A drawings and inspection package entitled ''Parts List and Drawings, Part 572 Subpart U, Eurosid 2 with Rib Extensions (ES–2re, Alpha Version), February 2008,'' consisting of:

(i) Drawing No. 175–0000 ES–2re Dummy Assembly;

(ii) Drawing No. 175–1000 Head Assembly;

(iii) Drawing No. 175–2000, Neck Assembly Test/Cert;

(iv) Drawing No. 175–3000, Shoulder Assembly;

(v) Drawing No. 175–3500, Arm Assembly, Left;

(vi) Drawing No. 175–3800, Arm Assembly, Right;

(vii) Drawing No. 175–4000, Thorax Assembly with Rib Extensions;

(viii) Drawing No. 175–5000, Abdominal Assembly;

(ix) Drawing No. 175–5500 Lumbar Spine Assembly;

(x) Drawing No. 175–6000 Pelvis Assembly;

(xi) Drawing No. 175–7000–1, Leg Assembly—left;

(xii) Drawing No. 175–7000–2, Leg Assembly—right;

(xiii) Drawing No. 175–8000, Neoprene Body Suit; and,

(xiv) Drawing No. 175–9000, Headform Assembly;

(3) A procedures manual entitled ''Procedures for Assembly, Disassembly and Inspection (PADI) of the EuroSID–2re 50th Percentile Adult Male Side Impact Crash Test Dummy, February 2008,'' incorporated by reference in §§ 572.180(a)(2), and 572.181(a);

(4) Society of Automotive Engineers (SAE) Recommended Practice J211, Rev. Mar 95 ''Instrumentation for Impact Tests—Part 1—Electronic Instrumentation''; and,

(5) SAE J1733 of 1994–12 ''Sign Convention for Vehicle Crash Testing.''

(b) The Director of the Federal Register approved the materials incorporated by reference in accordance with 5 U.S.C. 552(a) and 1 CFR part 51. Copies of the materials may be inspected at the Department of Transportation, Docket Operations, Room W12–140, 1200 New Jersey Avenue, SE., Washington, DC 20590, telephone (202) 366–9826, and at the National Archives and Records Administration (NARA), and in electronic format through *Regulations.gov*. For information on the availability and inspection of this material at NARA, call 202–741–6030, or go to: *http://www.archives.gov/federal_register/code_of_federal_regulations/ibr_locations.html*. For information on the availability and inspection of this material at *Regulations.gov*, call 1–877–378–5457, or go to: *http://www.regulations.gov*.

(c) The incorporated materials are available as follows:

(1) The Parts/Drawings List, Part 572 Subpart U, Eurosid 2 with Rib Extensions (ES2re), February 2008, referred to in paragraph (a)(1) of this section, the Parts List and Drawings, Part 572 Subpart U, Eurosid 2 with Rib Extensions (ES–2re, Alpha Version), February 2008, referred to in paragraph (a)(2) of this section, and the PADI document referred to in paragraph (a)(3) of this section, are available in electronic format through Regulations.gov and in paper format from Leet-Melbrook, Division of New RT, 18810 Woodfield Road, Gaithersburg, MD 20879, telephone (301) 670–0090.

(2) The SAE materials referred to in paragraphs (a)(4) and (a)(5) of this section are available from the Society of Automotive Engineers, Inc., 400 Commonwealth Drive, Warrendale, PA 15096, telephone 1–877–606–7323.

[71 FR 75331, Dec. 14, 2006, as amended at 73 FR 33920, June 16, 2008]

§ 572.181 General description.

(a) The ES–2re Side Impact Crash Test Dummy, 50th Percentile Adult Male, is defined by:

(1) The drawings and specifications contained in the ''Parts List and Drawings, Part 572 Subpart U, Eurosid 2 with Rib Extensions (ES–2re, Alpha Version), February 2008,'' incorporated by reference in § 572.180, which includes the technical drawings and specifications described in Drawing 175–0000, the titles of which are listed in Table A;

TABLE A

Component assembly	Drawing number
Head Assembly	175–1000
Neck Assembly Test/Cert	175–2000
Neck Bracket Including Lifting Eyebolt	175–2500
Shoulder Assembly	175–3000
Arm Assembly-Left	175–3500
Arm Assembly-Right	175–3800
Thorax Assembly with Rib Extensions	175–4000
Abdominal Assembly	175–5000
Lumbar Spine Assembly	175–5500
Pelvis Assembly	175–6000
Leg Assembly, Left	175–7000–1
Leg Assembly, Right	175–7000–2
Neoprene Body Suit	175–8000

(2) ''Parts/Drawings List, Part 572 Subpart U, Eurosid 2 with Rib Extensions (ES2re), February 2008,'' containing 8 pages, incorporated by reference in § 572.180,

(3) A listing of available transducers-crash test sensors for the ES–2re Crash Test Dummy is shown in drawing 175–0000 sheet 4 of 6, dated February 2008, incorporated by reference in § 572.180,

(4) Procedures for Assembly, Disassembly and Inspection (PADI) of the ES–2re Side Impact Crash Test Dummy, February 2008, incorporated by reference in § 572.180,

(5) Sign convention for signal outputs reference document SAE J1733 Information Report, titled ''Sign Convention for Vehicle Crash Testing'' dated December 1994, incorporated by reference in § 572.180.

(b) Exterior dimensions of ES–2re test dummy are shown in drawing 175–0000 sheet 3 of 6, dated February 2008.

(c) Weights of body segments (head, neck, upper and lower torso, arms and upper and lower segments) and the center of gravity location of the head are shown in drawing 175–0000 sheet 2 of 6, dated February 2008.

(d) Adjacent segments are joined in a manner such that, except for contacts existing under static conditions, there is no additional contact between metallic elements of adjacent body segments throughout the range of motion.

(e) The structural properties of the dummy are such that the dummy conforms to this Subpart in every respect before use in any test similar to those in Standard No. 214, Side Impact Protection and Standard No. 201, Occupant Protection in Interior Impact.

[71 FR 75331, Dec. 14, 2006, as amended at 73 FR 33921, June 16, 2008]

§ 572.182 Head assembly.

(a) The head assembly consists of the head (drawing 175–1000), including the neck upper transducer structural replacement, and a set of three (3) accelerometers in conformance with specifications in § 572.189(b) and mounted as shown in drawing (175–0000 sheet 1 of 6). When tested to the test procedure specified in paragraph (b) of this section, the head assembly shall meet performance requirements specified in paragraph (c) of this section.

(b) *Test procedure.* The head shall be tested per procedure specified in 49 CFR § 572.112(a).

(c) *Performance criteria.* (1) When the head assembly is dropped in accordance with § 572.112 (a), the measured peak resultant acceleration shall be between 125 g's and 155 g's;

(2) The resultant acceleration-time curve shall be unimodal to the extent that oscillations occurring after the main acceleration pulse shall not exceed 15% (zero to peak) of the main pulse;

(3) The fore-and-aft component of the head acceleration shall not exceed 15 g's.

§ 572.183 Neck assembly.

(a) The neck assembly consists of parts shown in drawing 175–2000. For purposes of this test, the neck is mounted within the headform assembly 175–9000 as shown in Figure U1 in appendix A to this subpart. When subjected to tests procedures specified in paragraph (b) of this section, the neck-headform assembly shall meet performance requirements specified in paragraph (c) of this section.

(b) *Test procedure.* (1) Soak the neck-headform assembly in a test environment as specified in § 572.189(n);

(2) Attach the neck-headform assembly to the Part 572 subpart E pendulum test fixture as shown in Figure U2–A in appendix A to this subpart, so that the midsagittal plane of the neck-headform assembly is vertical and perpendicular to the plane of motion of the pendulum longitudinal centerline shown in Figure U2–A. Torque the half-spherical screws (175–2004) located at either end of the neck assembly to 88 ±5 in-lbs using the neck compression tool (175–9500) or equivalent;

(3) Release the pendulum from a height sufficient to allow it to fall freely to achieve an impact velocity of 3.4±0.1 m/s measured at the center of the pendulum accelerometer (Figure 22 as set forth in 49 CFR 572.33) at the time the pendulum makes contact with the decelerating mechanism. The velocity-time history of the pendulum falls inside the corridor determined by the upper and lower boundaries specified in Table 1 to paragraph (a) of this section.

(4) Allow the neck to flex without the neck-headform assembly making contact with any object;

(5) Time zero is defined in § 572.189(j).

TABLE 1 TO PARAGRAPH (A)—ES–2RE NECK CERTIFICATION PENDULUM VELOCITY CORRIDOR

Upper boundary		Lower boundary	
Time (ms)	Velocity (m/s)	Time (ms)	Velocity (m/s)
1.0	0.00	0.0	−0.05
3.0	−0.25	2.5	−0.375
14.0	−3.20	13.5	−3.7
		17.0	−3.7

(c) *Performance criteria.* (1) The pendulum deceleration pulse is to be characterized in terms of decrease in velocity as determined by integrating the filtered pendulum acceleration response from time-zero.

(2) The maximum rotation in the lateral direction of the reference plane of the headform (175–9000) as shown in Figure U2–B in appendix A to this subpart, shall be 49 to 59 degrees with respect to the longitudinal axis of the pendulum occurring between 54 and 66 ms from time zero. Rotation of the headform-neck assembly and the neck angle with respect to the pendulum shall be measured with potentiometers specified in § 572.189(c), installed as shown in drawing 175–9000, and calculated per procedure specified in Figure U2–B in appendix A to this subpart;

(3) The decaying headform rotation vs. time curve shall cross the zero angle with respect to its initial position at time of impact relative to the pendulum centerline between 53 ms to 88 ms after the time the peak translation-rotation value is reached.

[71 FR 75331, Dec. 14, 2006, as amended at 73 FR 33921, June 16, 2008]

§ 572.184 Shoulder assembly.

(a) The shoulder (175–3000) is part of the body assembly shown in drawing 175–0000. When subjected to impact tests specified in paragraph (b) of this section, the shoulder assembly shall meet performance requirements of paragraph (c) of this section.

(b) *Test procedure.* (1) Soak the dummy assembly, without suit and shoulder foam pad (175–3010), in a test environment as specified in § 572.189(n);

(2) The dummy is seated, as shown in Figure U3 in appendix A to this subpart, on a flat, horizontal, rigid surface covered by two overlaid 2 mm thick Teflon sheets and with no back support of the dummy's torso. The dummy's torso spine backplate is vertical within ±2 degrees and the midsagittal plane of the thorax is positioned perpendicular to the direction of the plane of motion of the impactor at contact with the shoulder. The arms are oriented forward at 50±2 degrees from the horizontal, pointing downward. The dummy's legs are horizontal and symmetrical about the midsaggital plane with the distance between the innermost point on the opposite ankle at 100 ±5 mm. The length of the elastic shoulder cord (175–3015) shall be adjusted so that a force between and including 27.5 and 32.5 N applied in a forward direction at 4 ±1 mm from the outer edge of the clavicle in the same plane as the clavicle movement, is required to initiate a forward motion of 1 to 5 mm;

(3) The impactor is the same as defined in § 572.189(a);

(4) The impactor is guided, if needed, so that at contact with the shoulder,

its longitudinal axis is within ±0.5 degrees of a horizontal plane and perpendicular (±0.5 degrees) to the midsagittal plane of the dummy and the centerpoint on the impactor's face is within 5 mm of the center of the upper arm pivot bolt (5000040) at contact with the test dummy, as shown in Figure U3 in appendix A to this subpart;

(5) The impactor impacts the dummy's shoulder at 4.3±0.1 m/s.

(c) *Performance criteria.* The peak acceleration of the impactor is between 7.5 g's and 10.5 g's during the pendulum's contact with the dummy.

§572.185 Thorax (upper torso) assembly.

(a) The thorax assembly of the dummy must meet the requirements of both (b) and (c) of this section. Section 572.185(b) specifies requirements for an individual rib drop test, and §572.185(c) specifies requirements for a full-body thorax impact test.

(b) *Individual rib drop test.* For purposes of this test, the rib modules (175–4002), which are part of the thorax assembly (175–4000), are tested as individual units. When subjected to test procedures specified in paragraph (b)(1) of this section, the rib modules shall meet performance requirements specified in paragraph (b)(2) of this section. Each rib is tested at both the 459 mm and 815 mm drop height tests described in paragraphs (b)(1)(v)(A) and (B) of this section.

(1) *Test procedure.* (i) Soak the rib modules (175–4002) in a test environment as specified in 572.189(n);

(ii) Mount the rib module rigidly in a drop test fixture as shown in Figure U7 in appendix A to this subpart with the impacted side of the rib facing up;

(iii) The drop test fixture contains a free fall guided mass of 7.78±0.01 kg that is of rigid construction and with a flat impact face 150±1.0 mm in diameter and an edge radius of ±0.25 mm;

(iv) Align the vertical longitudinal centerline of the drop mass so that the centerpoint of the downward-facing flat surface is aligned to impact the centerline of the rib rail guide system within ± 2.5 mm.

(v) The impacting mass is dropped from the following heights:

(A) 459 ±5 mm

(B) 815 ±8 mm

(vi) A test cycle consists of one drop from each drop height specified in paragraph (b)(1)(v) of this section. Allow a period of not less than five (5) minutes between impacts in a single test cycle. Allow a period of not less than thirty (30) minutes between two separate cycles of the same rib module.

(2) *Performance criteria.*

(i) Each of the rib modules shall deflect as specified in paragraphs (b)(2)(i)(A) and (B) of this section, with the deflection measurements made with the internal rib module position transducer specified in §572.189(d):

(A) Not less than 36 mm and not more than 40 mm when impacted by the mass dropped from 459 mm; and,

(B) Not less than 46 mm and not more than 51mm when impacted by the mass dropped from 815 mm.

(c) *Full-body thorax impact test.* The thorax is part of the upper torso assembly shown in drawing 175–4000. For this full-body thorax impact test, the dummy is tested as a complete assembly (drawing 175–0000) with the struck-side arm (175–3500, left arm; 175–3800, right arm) removed. The dummy's thorax is equipped with deflection potentiometers as specified in drawing SA572–S69. When subjected to the test procedures specified in paragraph (c)(1) of this section, the thorax shall meet the performance requirements set forth in paragraph (c)(2).

(1) *Test Procedure.* (i) Soak the dummy assembly (175–0000), with struck-side arm (175–3500, left arm; 175–3800, right arm), shoulder foam pad (175–3010), and neoprene body suit (175–8000) removed, in a test environment as specified in §572.189(n);

(ii) The dummy is seated, as shown in Figure U4 in appendix A to this subpart, on a flat, horizontal, rigid surface covered by two overlaid 2 mm thick Teflon sheets and with no back support of the dummy's torso. The dummy's torso spine backplate is vertical within ±2 degrees and the midsagittal plane of thorax is positioned perpendicular to the direction of the plane of motion of the impactor at contact with the thorax. The non-struck side arm is oriented vertically, pointing downward. The dummy's legs are horizontal and symmetrical about the midsagittal

plane with the distance between the innermost point on the opposite ankle at 100 ±5 mm;

(iii) The impactor is the same as defined in § 572.189(a);

(iv) The impactor is guided, if needed, so that at contact with the thorax its longitudinal axis is within ±0.5 degrees of horizontal and perpendicular ±0.5 degrees to the midsagittal plane of the dummy and the centerpoint of the impactor's face is within 5 mm of the impact point on the dummy's middle rib shown in Figure U4 in appendix A to this subpart;

(v) The impactor impacts the dummy's thorax at 5.5 m/s ±0.1 m/s.

(vi) Time zero is defined in § 572.189(k).

(2) *Performance Criteria.* (i) The individual rib modules shall conform to the following range of deflections:

(A) Upper rib not less than 34 mm and not greater than 41 mm;

(B) Middle rib not less than 37 mm and not greater than 45 mm;

(C) Lower rib not less than 37 mm and not greater than 44 mm.

(ii) The impactor force shall be computed as the product of the impact probe acceleration and its mass. The peak impactor force at any time after 6 ms from time zero shall be not less than 5100 N and not greater than 6200 N.

[71 FR 75331, Dec. 14, 2006, as amended at 73 FR 33921, June 16, 2008]

§ 572.186 Abdomen assembly.

(a) The abdomen assembly (175–5000) is part of the dummy assembly shown in drawing 175–0000 including load sensors specified in § 572.189(e). When subjected to tests procedures specified in paragraph (b) of this section, the abdomen assembly shall meet performance requirements specified in paragraph (c) of this section.

(b) *Test procedure.*

(1) Soak the dummy assembly (175–0000), without suit (175–8000) and shoulder foam pad (175–3010), as specified in § 572.189(n);

(2) The dummy is seated as shown in Figure U5 in appendix A to this subpart;

(3) The abdomen impactor is the same as specified in § 572.189(a) except that on its rectangular impact surface is affixed a special purpose block whose weight is 1.0 ± 0.01 kg. The block is 70 mm high, 150 mm wide and 60 to 80 mm deep. The impact surface is flat, has a minimum Rockwell hardness of M85, and an edge radius of 4 to 5 mm. The block's wide surface is horizontally oriented and centered on the longitudinal axis of the probe's impact face as shown in Figure U5–A in appendix A to this subpart;

(4) The impactor is guided, if needed, so that at contact with the abdomen its longitudinal axis is within ± 0.5 degrees of a horizontal plane and perpendicular ± 0.5 degrees to the midsagittal plane of the dummy and the centerpoint on the impactor's face is aligned within 5 mm of the center point of the middle load measuring sensor in the abdomen as shown in Figure U5;

(5) The impactor impacts the dummy's abdomen at 4.0 m/s ± 0.1 m/s;

(6) Time zero is defined in § 572.189(k).

(c) Performance criteria.

(1) The maximum sum of the forces of the three abdominal load sensors, specified in 572.189(e), shall be not less than 2200 N and not more than 2700 N and shall occur between 10 ms and 12.3 ms from time zero. The calculated sum of the three load cell forces must be concurrent in time.

(2) Maximum impactor force (impact probe acceleration multiplied by its mass) is not less than 4000 N and not more than 4800 N occurring between 10.6 ms and 13.0 ms from time zero.

§ 572.187 Lumbar spine.

(a) The lumbar spine assembly consists of parts shown in drawing 175–5500. For purposes of this test, the lumbar spine is mounted within the headform assembly 175–9000 as shown in Figure U1 in appendix A to this subpart. When subjected to tests procedures specified in paragraph (b) of this section, the lumbar spine-headform assembly shall meet performance requirements specified in paragraph (c) of this section.

(b) *Test procedure.* (1) Soak the lumbar spine-headform assembly in a test environment as specified in § 572.189(n);

(2) Attach the lumbar spine-headform assembly to the Part 572 pendulum test fixture per procedure in § 572.183(b)(2)

and as shown in Figure U2–A in appendix A to this subpart. Torque the lumbar hex nut (p/n 9000057) on to the lumbar cable assembly (175–5506) to 50 ± 5 in-lb;

(3) Release the pendulum from a height sufficient to allow it to fall freely to achieve an impact velocity of 6.05 ±0.1 m/s measured at the center of the pendulum accelerometer (Figure 22) at the time the pendulum makes contact with its decelerating mechanism. The velocity-time history of the pendulum falls inside the corridor determined by the upper and lower boundaries specified in Table 1 to paragraph (b) of this section;

(4) Allow the lumbar spine to flex without the lumbar spine or the headform making contact with any object;

(5) Time zero is defined in § 572.189(j).

TABLE 1 TO PARAGRAPH (b)—ES–2RE LUMBAR SPINE CERTIFICATION PENDULUM VELOCITY CORRIDOR

Upper boundary		Lower boundary	
Time (ms)	Velocity (m/s)	Time (ms)	Velocity (m/s)
1.0	0.00	0.0	−0.05
3.7	−0.24	2.7	−0.425
27.0	−5.80	24.5	−6.50
		30.0	−6.50

(c) *Performance criteria.* (1) The pendulum deceleration pulse is to be characterized in terms of decrease in velocity as determined by integrating the filtered pendulum acceleration response from time-zero.

(2) The maximum rotation in the lateral direction of the reference plane of the headform (175–9000) as shown in Figure U2–B in appendix A to this subpart, shall be 45 to 55 degrees with respect to the longitudinal axis of the pendulum occurring between 39 and 53 ms from time zero. Rotation of the headform-neck assembly shall be measured with potentiometers specified in § 572.189(c), installed as shown in drawing 175–9000, and calculated per procedure specified in Figure U2–B in appendix A to this subpart.

(3) The decaying headform rotation vs. time curve shall cross the zero angle with respect to its initial position at impact relative to the pendulum centerline between 37 ms to 57 ms after the time the peak translation-rotation value is reached.

[71 FR 75331, Dec. 14, 2006, as amended at 73 FR 33921, June 16, 2008]

§ 572.188 Pelvis.

(a) The pelvis (175–6000) is part of the torso assembly shown in drawing 175–0000. The pelvis is equipped with a pubic symphysis load sensor in conformance with § 572.189(f) and mounted as shown in drawing (175–0000 sheet 4). When subjected to tests procedures specified in paragraph (b) of this section, the pelvis assembly shall meet performance requirements specified in paragraph (c) of this section.

(b) *Test procedure.*

(1) Soak the dummy assembly (175–0000) without suit (175–8000) and shoulder foam pad (175–3010) as specified in § 572.189(n);

(2) The dummy is seated as specified in Figure U6 in appendix A to this subpart;

(3) The pelvis impactor is the same as specified in § 572.189(a);

(4) The impactor is guided, if needed, so that at contact with the pelvis its longitudinal axis is within ±0.5 degrees of a horizontal plane and perpendicular to the midsagittal plane of the dummy and the centerpoint on the impactor's face is within 5 mm of the center of the H-point in the pelvis, as shown in Figure U6 in appendix A to this subpart;

(5) The impactor impacts the dummy's pelvis at 4.3 ±0.1 m/s.

(6) Time zero is defined in § 572.189(k).

(c) *Performance criteria.* (1) The impactor force (probe acceleration multiplied by its mass) shall be not less than 4,700 N and not more than 5,400 N, occurring between 11.8 ms and 16.1 ms from time zero;

(2) The pubic symphysis load, measured with load cell specified in § 572.189(f) shall be not less than 1,230 N and not more than 1,590 N occurring between 12.2 ms and 17.0 ms from time zero.

[71 FR 75331, Dec. 14, 2006, as amended at 73 FR 33921, June 16, 2008]

§ 572.189 Instrumentation and test conditions.

(a) The test probe for lateral shoulder, thorax without arm, abdomen, and pelvis impact tests is the same as that

specified in §572.36(a) and the impact probe has a minimum mass moment of inertia in yaw of 9,000 kg-cm^2, a free air resonant frequency not less than 1,000 Hz and the probe's end opposite to the impact face has provisions to mount an accelerometer with its sensitive axis collinear with the longitudinal axis of the probe. All hardware attached directly to the impactor and one-third (⅓) of the mass of the suspension cables must be included in the calculations of the total impactor mass. The sum mass of the attachments and ⅓ cable mass must not exceed 5 percent of the total pendulum mass. No suspension hardware, suspension cables, or any other attachments to the test probe, including velocity vane, shall make contact with the dummy during the test.

(b) Accelerometers for the head, the thoracic spine, and the pelvis conform to specifications of SA572–S4.

(c) Rotary potentiometer for the neck and lumbar spine certification tests conforms to SA572–53.

(d) Linear position transducer for the thoracic rib conforms to SA572–S69.

(e) Load sensors for the abdomen conform to specifications of SA572–S75.

(f) Load sensor for the pubic symphysis conforms to specifications of SA572–77.

(g) Load sensor for the lumbar spine conforms to specifications of SA572–76.

(h) Instrumentation and sensors conform to the Recommended Practice SAE J–211 (Mar. 1995)—Instrumentation for Impact Test unless noted otherwise.

(i) All instrumented response signal measurements shall be treated to the following specifications:

(1) Head acceleration—Digitally filtered CFC 1000;

(2) Neck and lumbar spine rotations—Digitally filtered CFC 180;

(3)Neck and lumbar spine pendulum accelerations—Digitally filtered CFC 60;

(4) Pelvis, shoulder, thorax without arm, and abdomen impactor accelerations—Digitally filtered CFC 180;

(5) Abdominal and pubic symphysis force—Digitally filtered at CFC 600;

(6) Thorax deflection—Digitally filtered CFC 180.

(j)(1) Filter the pendulum acceleration data using a SAE J211 CFC 60 filter.

(2) Determine the time when the filtered pendulum accelerometer data first crosses the −10 g level (T_{10}).

(3) Calculate time-zero: $T0 = T_{10} - T_m$.,

Where:

T_m = 1.417 ms for the Neck Test
= 1.588 ms for the Lumbar Spine Test

(4) Set the data time-zero to the sample number nearest to the calculated T0.

(k)(1) Filter the pendulum acceleration data using a SAE J211 CFC 180 filter.

(2) Determine the time when the filtered pendulum accelerometer data first crosses the −1.0 m/s^2 (−.102 g) acceleration level (T0).

(3) Set the data time-zero to the sample number of the new T0.

(l) Mountings for the head, spine and pelvis accelerometers shall have no resonance frequency within a range of 3 times the frequency range of the applicable channel class.

(m) Limb joints of the test dummy are set at the force between 1 to 2 G's, which just supports the limb's weight when the limbs are extended horizontally forward. The force required to move a limb segment does not exceed 2 G's throughout the range of the limb motion.

(n) Performance tests are conducted, unless specified otherwise, at any temperature from 20.6 to 22.2 degrees C. (69 to 72 degrees F.) and at any relative humidity from 10 percent to 70 percent after exposure of the dummy to those conditions for a period of not less than 4 hours.

(o) Certification tests of the same component, segment, assembly, or fully assembled dummy shall be separated in time by a period of not less than thirty (30) minutes unless otherwise specified.

APPENDIX A TO SUBPART U OF PART 572—FIGURES

Figure U1

NECK/LUMBAR SPINE ATTACHED TO HEADFORM

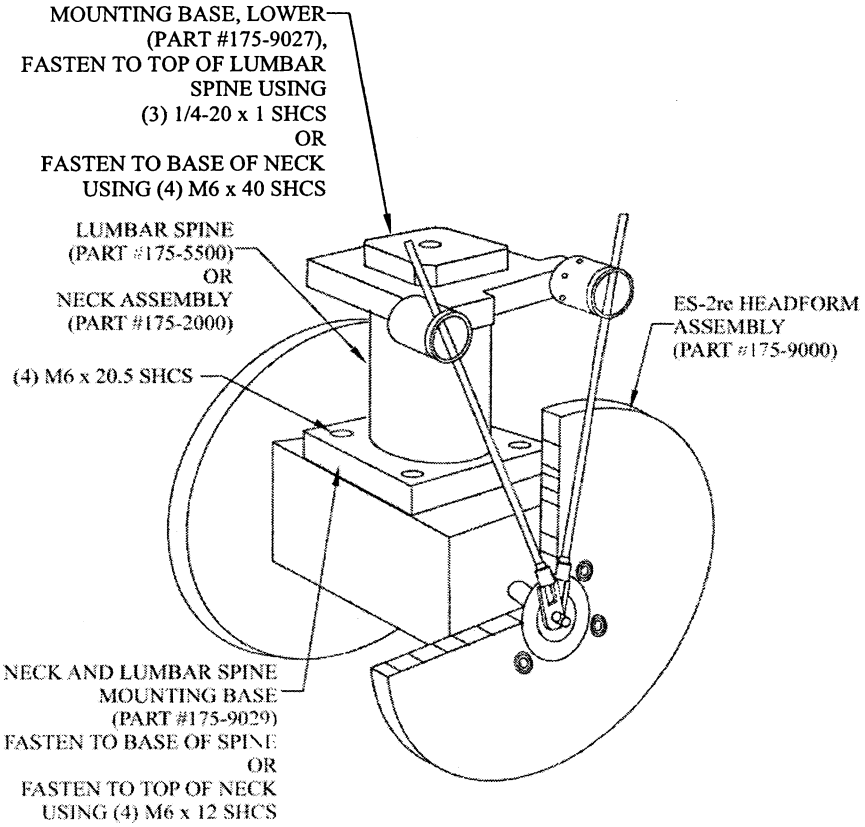

Figure U2-A

NECK/LUMBAR SPINE/HEADFORM ATTACHED TO PENDULUM

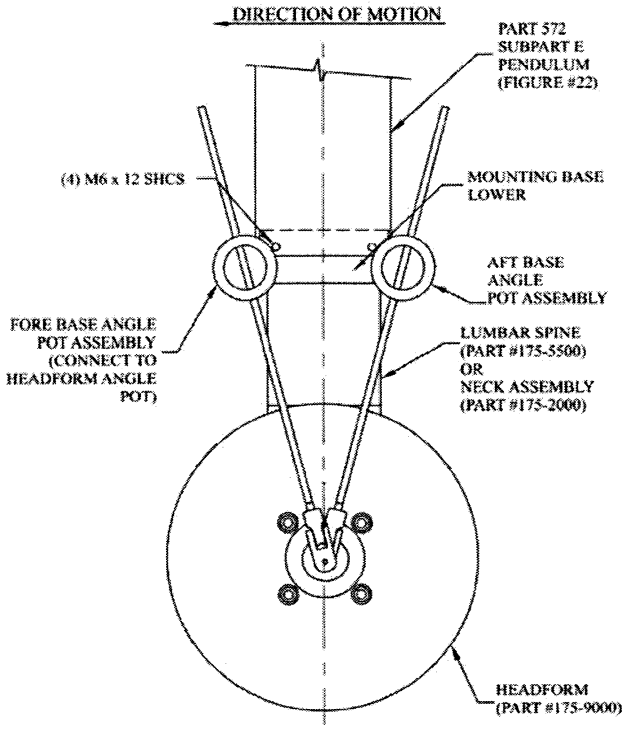

Figure U2-B

ANGLE MEASUREMENTS WITH HEADFORM SET-UP

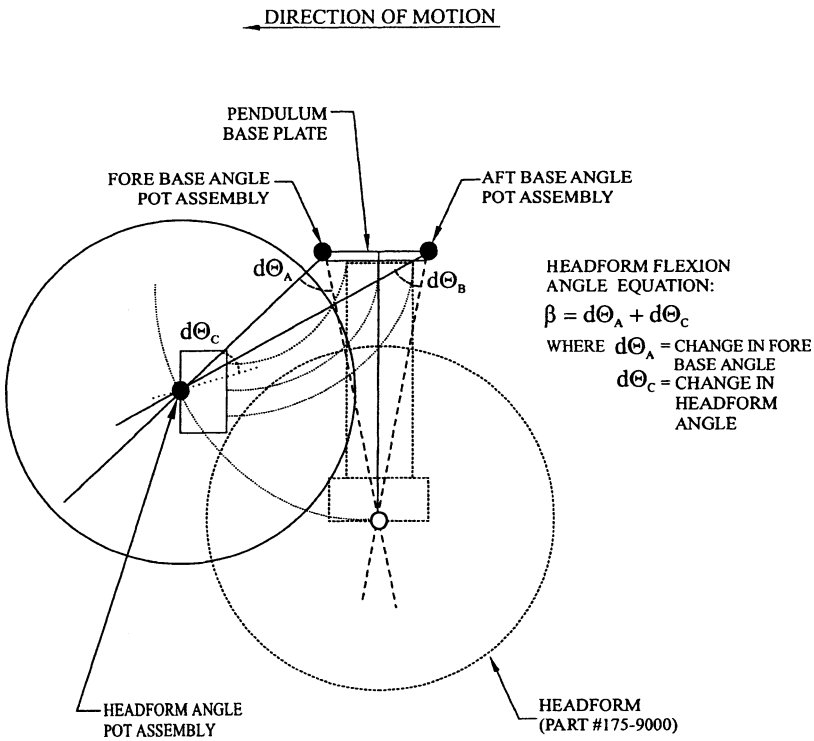

Figure U3
SHOULDER IMPACT

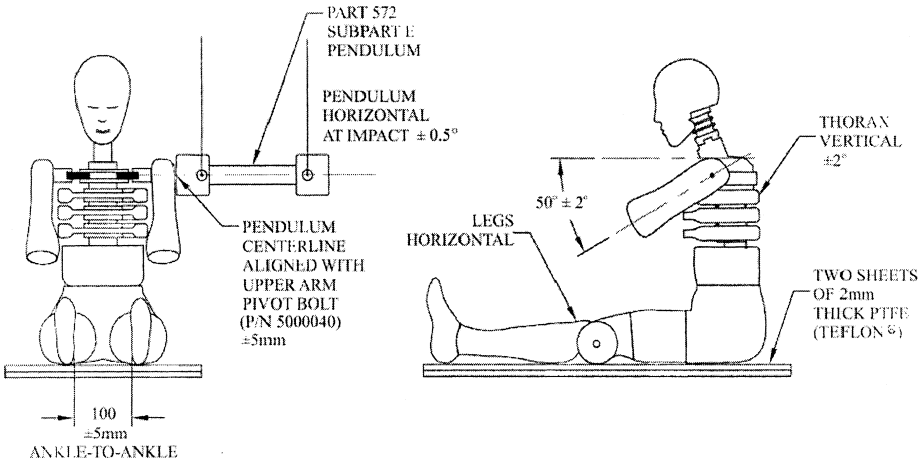

Figure U4
THORAX IMPACT

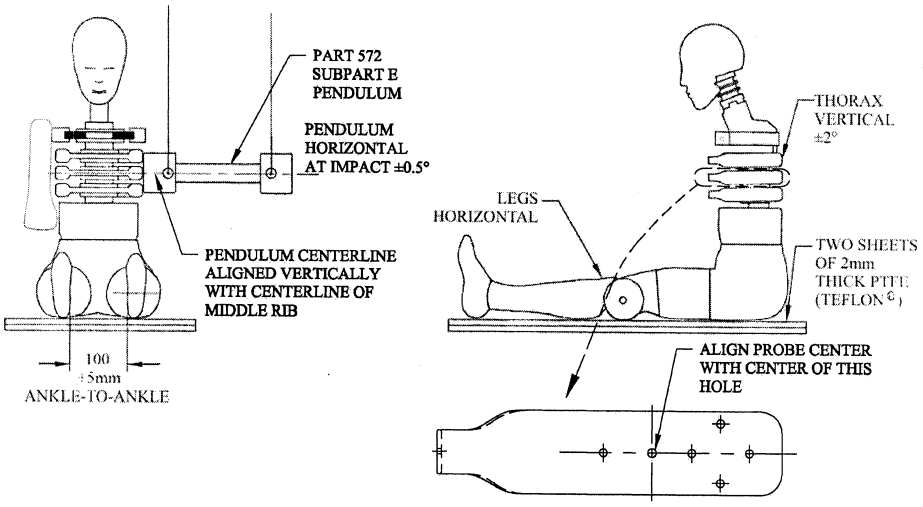

RIB DETAIL
(REF. DWG. 175-4004)

Figure U5
ABDOMEN IMPACT

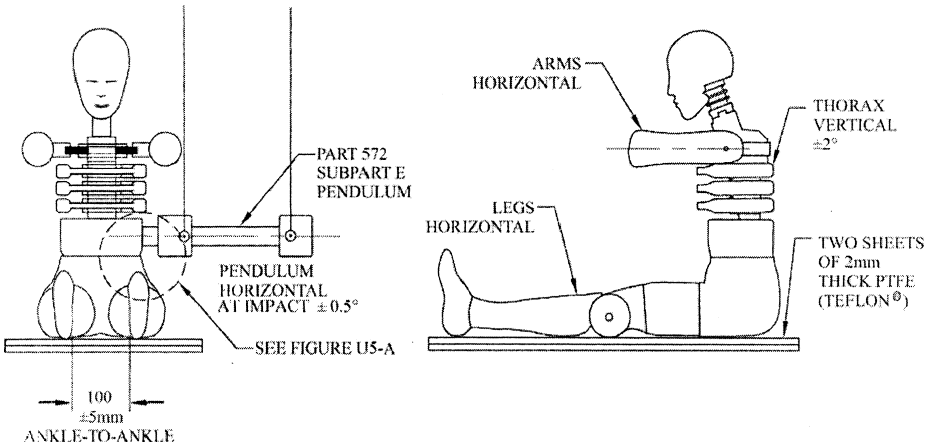

Figure U5-A

ABDOMEN IMPACT - VIEW A

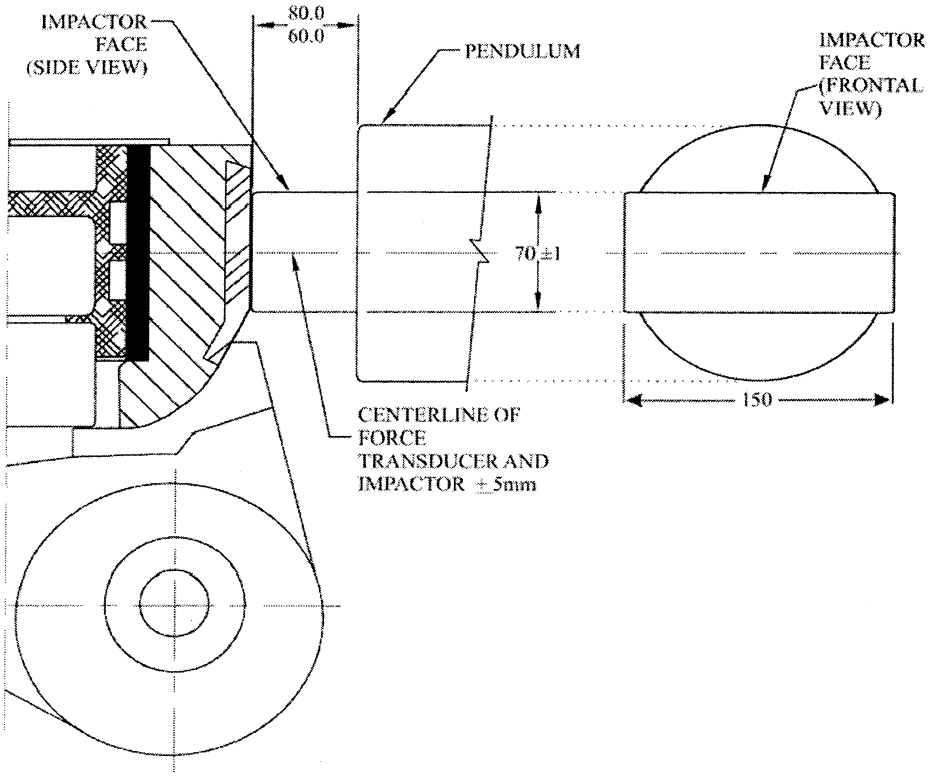

ABDOMEN TEST SET-UP

Figure U6
PELVIS IMPACT

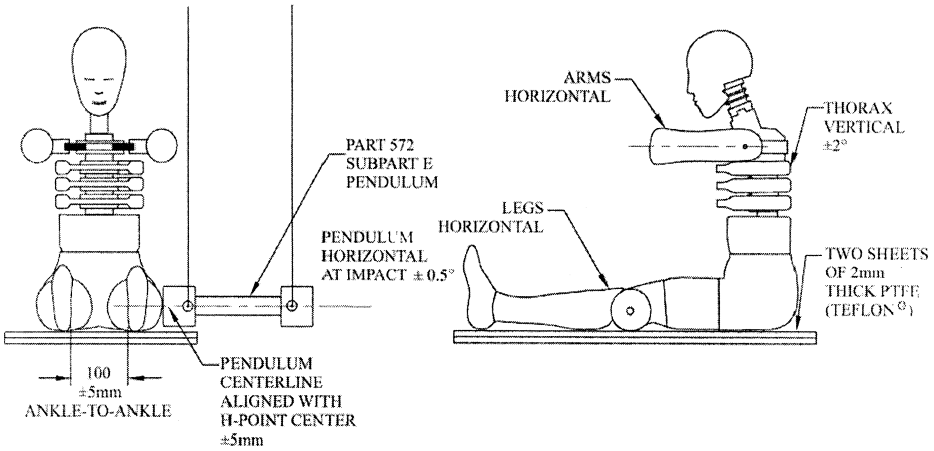

Figure U7
RIB DROP TEST

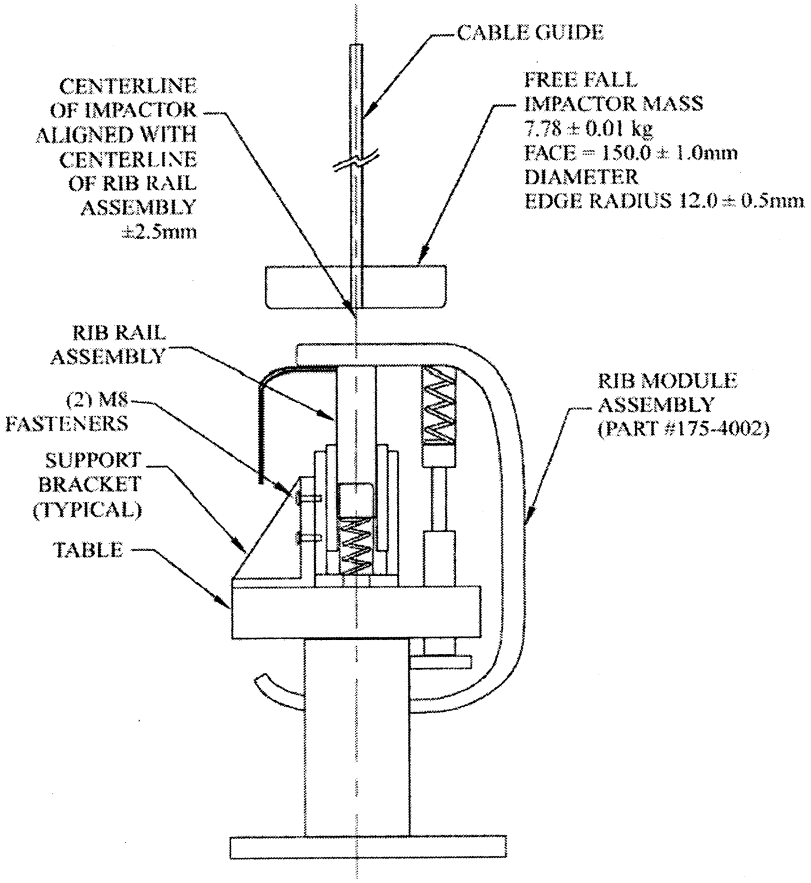

[71 FR 75331, Dec. 14, 2006, as amended at 73 FR 33921, June 16, 2008]

Subpart V, SID–IIsD Side Impact Crash Test Dummy, Small Adult Female

SOURCE: 71 FR 75370, Dec. 14, 2006, unless otherwise noted.

§ 572.190 Incorporated materials.

(a) The following materials are hereby incorporated into this Subpart by reference:

(1) A parts/drawing list entitled, ''Parts/Drawings List, Part 572 Subpart V, SID–IIsD, July 1, 2008,''

(2) A drawings and inspection package entitled ''Drawings and Specifications for the SID–IIsD Small Female Crash Test Dummy, Part 572 Subpart V, July 1, 2008,'' consisting of:

(i) Drawing No. 180–0000, SID–IIsD Complete Assembly;

(ii) Drawing No. 180–1000, 6 Axis Head Assembly;

(iii) Drawing No. 180–2000, Neck Assembly;

(iv) Drawing No. 180–3000, Upper Torso Assembly;

(v) Drawing No. 180–3005, Washer, Clamping;

(vi) Drawing No. 9000021, Screw, SHCS ⅜–16 x 1 NYLOK;

(vii) Drawing No. 900005, Screw, SHCS ¼–20 x ⅝ NYLOK;

(viii) Drawing No. 180–4000, Lower Torso Assembly Complete;

(ix) Drawing No. 180–5000–1, Complete Leg Assembly, Left;

(x) Drawing No. 180–5000–2, Complete Leg Assembly, Right;

(xi) Drawing No. 180–6000–1, Arm Assembly Left Molded;

(xii) Drawing No. 180–6000–2, Arm Assembly Right Molded; and,

(xiii) Drawing No. 180–9000, SID–IIsD Headform Assembly.

(3) A procedures manual entitled, ''Procedures for Assembly, Disassembly, and Inspection (PADI) of the SID–IIsD Side Impact Crash Test Dummy, July 1, 2008,'' incorporated by reference in § 572.191;

(4) SAE Recommended Practice J211, Rev. Mar 95 ''Instrumentation for Impact Tests—Part 1—Electronic Instrumentation''; and,

(5) SAE J1733 of 1994–12, ''Sign Convention for Vehicle Crash Testing.''

(b) The Director of the Federal Register approved the materials incorporated by reference in accordance with 5 U.S.C. 552(a) and 1 CFR part 51. Copies of the materials may be inspected at the Department of Transportation, Docket Operations, Room W12–140, 1200 New Jersey Avenue, SE., Washington, DC 20590, telephone (202) 366–9826, and at the National Archives and Records Administration (NARA), and in electronic format through Regulations.gov. For information on the availability and inspection of this material at NARA, call 202–741–6030, or go to: *http://www.archives.gov/federal_register/code_of_federal_regulations/ibr_locations.html*. For information on the availability and inspection of this material at Regulations.gov, call 1–877–378–5457, or go to: *http://www.regulations.gov*.

(c) The incorporated materials are available as follows:

(1) The Parts/Drawings List, Part 572 Subpart V, SID–IIsD, July 1, 2008, referred to in paragraph (a)(1) of this section, the package entitled Drawings and Specifications for SID–IIsD Small Female Crash Test Dummy, Part 572 Subpart V, July 1, 2008, referred to in paragraph (a)(2) of this section, and the PADI document referred to in paragraph (a)(3) of this section, are available in electronic format through *www.Regulations.gov* and in paper format from Leet-Melbrook, Division of New RT, 18810 Woodfield Road, Gaithersburg, MD 20879, (301) 670–0090.

(2) The SAE materials referred to in paragraphs (a)(4) and (a)(5) of this section are available from the Society of Automotive Engineers, Inc., 400 Commonwealth Drive, Warrendale, PA 15096, telephone 1–877–606–7323.

[71 FR 75370, Dec. 14, 2006, as amended at 74 FR 29894, June 23, 2009]

§ 572.191 General description.

(a) The SID–IIsD Side Impact Crash Test Dummy, small adult female, is defined by:

(1) The drawings and specifications contained in the ''Drawings and Specifications for SID–IIsD Small Female Crash Test Dummy, Part 572 Subpart V, July 1, 2008,'' which includes the technical drawings and specifications described in Drawing 180–0000, the titles of which are listed in Table A;

TABLE A

Component assembly	Drawing number
6 Axis Head Assembly	180–1000
Neck Assembly	180–2000
Upper Torso Assembly	180–3000
Clamping Washer	180–3005
Lower Torso Assembly Complete	180–4000
Complete Leg Assembly, Left	180–5000–1
Complete Leg Assembly, Right	180–5000–2
Arm Assembly Left Molded	180–6000–1
Arm Assembly Right Molded	180–6000–2

(2) The ''Parts/Drawing List, Part 572 Subpart V, SID–IIsD,'' dated July 1, 2008 and containing 7 pages,

(3) A listing of available transducers-crash test sensors for the SID–IIsD Side Impact Crash Test Dummy, 5th percentile adult female, is shown in drawing 180–0000 sheet 2 of 5, dated July 1, 2008,

(4) ''Procedures for Assembly, Disassembly, and Inspection (PADI) of the

SID–IIsD Side Impact Crash Test Dummy, July 1, 2008,'' and,

(5) Sign convention for signal outputs reference document SAE J1733 Information Report, titled ''Sign Convention for Vehicle Crash Testing,'' dated July 12, 1994, incorporated by reference in § 572.200(k).

(b) Exterior dimensions of the SID–IIsD Small Adult Female Side Impact Crash Test Dummy are shown in drawing 180–0000 sheet 3 of 5, dated July 1, 2008.

(c) Weights and center of gravity locations of body segments are shown in drawing 180–0000 sheet 4 of 5, dated July 1, 2008.

(d) Adjacent segments are joined in a manner such that, except for contacts existing under static conditions, there is no additional contact between metallic elements of adjacent body segments throughout the range of motion.

(e) The structural properties of the dummy are such that the dummy conforms to this Subpart in every respect before use in any test similar to that set forth in Standard 214, Side Impact Protection (49 CFR 571.214).

[71 FR 75370, Dec. 14, 2006, as amended at 74 FR 29895, June 23, 2009]

§ 572.192 Head assembly.

(a) The head assembly consists of the head (180–1000) and a set of three (3) accelerometers in conformance with specifications in 49 CFR 572.200(d) and mounted as shown in drawing 180–0000 sheet 2 of 5. When tested to the procedure specified in paragraph (b) of this section, the head assembly shall meet performance requirements specified in paragraph (c) of this section.

(b) *Test procedure*. The head shall be tested according to the procedure specified in 49 CFR 572.112(a).

(c) *Performance criteria*.

(1) When the head assembly is dropped from either the right or left lateral incline orientations in accordance with procedure in § 572.112(a), the measured peak resultant acceleration shall be between 115 g and 137 g;

(2) The resultant acceleration-time curve shall be unimodal to the extent that oscillations occurring after the main acceleration pulse shall not exceed 15% (zero to peak) of the main pulse;

(3) The longitudinal acceleration vector (anterior-posterior direction) shall not exceed 15 g.

§ 572.193 Neck assembly.

(a) The neck assembly consists of parts shown in drawing 180–2000. For purposes of this test, the neck assembly is mounted within the headform assembly (180–9000) as shown in Figure V1 in appendix A to this subpart. When subjected to the test procedure specified in paragraph (b) of this section, the neck-headform assembly shall meet the performance requirements specified in paragraph (c) of this section.

(b) *Test procedure*.

(1) Soak the assembly in a test environment as specified in 49 CFR 572.200(j);

(2) Attach the neck-headform assembly, as shown in Figure V2–A or V2–B in appendix A to this subpart, to the 49 CFR Part 572 pendulum test fixture (Figure 22, 49 CFR 572.33) in either the left or right lateral impact orientations, respectively, so that the midsagittal plane of the neck-headform assembly is vertical and at right angle (90 ± 1 degrees) to the plane of motion of the pendulum longitudinal centerline;

(3) Release the pendulum from a height sufficient to achieve a velocity of 5.57 ± 0.06 m/s measured at the center of the pendulum accelerometer, as shown in 49 CFR Part 572 Figure 15, at the instant the pendulum makes contact with the decelerating mechanism;

(4) The neck flexes without the neck-headform assembly making contact with any object;

(5) Time zero is defined as the time of initial contact between the pendulum mounted striker plate and the pendulum deceleration mechanism;

(6) Allow a period of at least thirty (30) minutes between successive tests on the same neck assembly.

(c) *Performance Criteria*.

(1) The pendulum deceleration pulse is characterized in terms of decrease in velocity as obtained by integrating the pendulum acceleration output from time zero:

Time(ms)	Peakpendulumdelta-V(m/s)
10.0	−2.20 to −2.80
15.0	−3.30 to −4.10
20.0	−4.40 to −5.40
25.0	−5.40 to −6.10
>25.0 < 100	−5.50 to −6.20

(2) The maximum translation-rotation of the midsagittal plane of the headform disk (180–9061 or 9062) in the lateral direction measured, with the rotation transducers specified in 49 CFR 572.200(e) shall be 71 to 81 degrees with respect to the longitudinal axis of the pendulum (see Figure V2–C in appendix A to this subpart) occurring between 50 and 70 ms from time zero;

(3) Peak occipital condyle moment shall not be higher than −36 Nm and not lower than −44 Nm. The moment measured by the upper neck load cell (Mx) shall be adjusted by the following formula: Mx(oc)[1]= Mx+0.01778Fy;

(4) The decaying moment shall cross the 0 Nm line after peak moment between 102 ms-126 ms after time zero.

[71 FR 75370, Dec. 14, 2006, as amended at 74 FR 29895, June 23, 2009]

§ 572.194 Shoulder.

(a) The shoulder structure is part of the upper torso assembly shown in drawing 180–3000. For the shoulder impact test, the dummy is tested as a complete assembly (drawing 180–0000). The dummy is equipped with T1 laterally oriented accelerometer as specified in 49 CFR 572.200(d), and deflection potentiometer as specified in 180–3881 configured for shoulder and installed as shown in drawing 180–0000 sheet 2 of 5. When subjected to the test procedure as specified in paragraph (b) of this section, the shoulder shall meet the performance requirements of paragraph (c) of this section.

(b) *Test procedure*. (1) Soak the dummy assembly (180–0000) in a test environment as specified in 49 CFR 572.200(j).

(2) Seat the dummy, outfitted with the torso jacket (180–3450) and cotton underwear pants on a certification bench, specified in Figure V3 in appendix A to this subpart, the seat pan and the seatback surfaces of which are covered with a 2 mm thick PTFE (Teflon) sheet;

(3) Align the outermost portion of the pelvis flesh of the impacted side of the seated dummy tangent to a vertical plane located within 10 mm of the side edge of the bench as shown in Figure V4–A in appendix A to this subpart, while the midsagittal plane of the dummy is in vertical orientation.

(4) Push the dummy at the knees and at mid-sternum of the upper torso with just sufficient horizontally oriented force towards the seat back until the back of the upper torso is in contact with the seat back.

(5) While maintaining the dummy's position as specified in paragraphs (b)(3) and (4) of this section, the top of the shoulder rib mount (drawing 180–3352) orientation in the fore-and-aft direction is 24.6 ± 2.0 degrees relative to horizontal, as shown in Figure V4–B in appendix A to this subpart.

(6) Adjust orientation of the legs such that they are symmetrical about the mid-sagittal plane, the thighs touch the seat pan, the inner part of the right and left legs at the knees are as close as possible to each other, the heels touch the designated foot support surface and the feet are vertical and as close together as possible.

(7) Orient the arm to point forward at 90 ±2 degrees relative to the inferior-superior orientation of the upper torso spine box incline.

(8) The impactor is specified in 49 CFR 572.200(a).

(9) The impactor is guided, if needed, so that at contact with the dummy's arm rotation centerline (ref. item 23 in drawing 180–3000) the impactor's longitudinal axis is within ± 1 degree of a horizontal plane and perpendicular to the midsagittal plane of the dummy. The centerpoint of the impactor face at contact is within 2 mm of the shoulder yoke assembly rotation centerline (drawing 180–3327), as shown in Figure V4–A in appendix A to this subpart.

(10) The dummy's arm-shoulder is impacted at 4.3 ± 0.1 m/s with the impactor meeting the alignment and contact point requirements of paragraph (b)(9) of this section.

[1] Mx(oc) is the moment at occipital condyle (Newton-meters) and Fy is the lateral shear force (Newtons) measured by the load cell.

(11) Allow a period of at least thirty (30) minutes between successive tests of the same shoulder assembly.

(c) *Performance criteria.*

(1) While the impactor is in contact with the dummy's arm, the shoulder shall compress not less than 28 mm and not more than 37 mm measured by the potentiometer specified in (a);

(2) Peak lateral acceleration of the upper spine (T1) shall not be less than 17 g and not more than 22 g;

(3) Peak impactor acceleration shall be not less than 13 g and not more than 18 g.

[71 FR 75370, Dec. 14, 2006, as amended at 74 FR 29895, June 23, 2009]

§ 572.195 Thorax with arm.

(a) The thorax is part of the upper torso assembly shown in drawing 180–3000. For the thorax with arm impact test, the dummy is tested as a complete assembly (drawing 180–0000). The dummy's thorax is equipped with T1 and T12 laterally oriented accelerometers as specified in 49 CFR 572.200(d), and deflection potentiometers for the thorax and shoulder as specified in 180–3881, installed as shown in drawing 180–0000 sheet 2 of 5. When subjected to the test procedure as specified in paragraph (b) of this section, the thorax shall meet performance requirements of paragraph (c) of this section.

(b) *Test procedure.* (1) Soak the dummy assembly (180–0000) in a test environment as specified in 49 CFR 572.200(j).

(2) Seat the dummy, outfitted with the torso jacket (180–3450) and cotton underwear pants on a certification bench, specified in Figure V3, the seat pan and the seatback surfaces of which are covered with a 2-mm-thick PTFE (Teflon) sheet.

(3) Align the outermost portion of the pelvis flesh of the impacted side of the seated dummy tangent to a vertical plane located within 10 mm of the side edge of the bench as shown in Figure V5–A, while the midsagittal plane of the dummy is in vertical orientation.

(4) Push the dummy at the knees and at mid-sternum of the upper torso with just sufficient horizontally oriented force towards the seat back until the back of the upper torso is in contact with the seat back.

(5) While maintaining the dummy's position as specified in paragraphs (b)(3) and (4) of this section, the top of the shoulder rib mount (drawing 180–3352) orientation in the fore-and-aft direction is 24.6 ± 2.0 degrees relative to horizontal as shown in Figure V5–B in appendix A to this subpart.

(6) Adjust orientation of the legs such that they are symmetrical about the mid-sagittal plane, the thighs touch the seat pan, the inner part of the right and left legs at the knees are as close as possible to each other, the heels touch the designated foot support surface and the feet are vertical and as close together as possible.

(7) Orient the arm downward to the lowest detent such that the longitudinal centerline of the arm is parallel to the inferior-superior orientation of the spine box.

(8) The impactor is specified in 49 CFR 572.200(a).

(9) The impactor is guided, if needed, so that at contact with the dummy's arm, its longitudinal axis is within ±1 degree of a horizontal plane and perpendicular to the midsagittal plane of the dummy. The centerpoint of the impactor face is within 2 mm of the vertical midpoint of the second thoracic rib and coincident with a line parallel to the seat back incline passing through the center of the shoulder yoke assembly arm rotation pivot (drawing 180–3327), as shown in Figure V5–A in appendix A to this subpart.

(10) The dummy's arm is impacted at 6.7 ± 0.1 m/s.

(11) Time zero is defined as the time of contact between the impact probe and the arm.

(12) Allow a period of at least thirty (30) minutes between successive tests of the same thorax assembly.

(c) *Performance criteria.*

(1) While the impactor is in contact with the dummy's arm, the thoracic ribs and the shoulder shall conform to the following range of deflections:

(i) Shoulder not less than 31 mm and not more than 40 mm;

(ii) Upper thorax rib not less than 25 mm and not more than 32 mm;

(iii) Middle thorax rib not less than 30 mm and not more than 36 mm;

(iv) Lower thorax rib not less than 32 mm and not more than 38 mm;

(2) Peak lateral acceleration of the upper spine (T1) shall not be less than 34 g and not more than 43 g, and the lower spine (T12) not less than 29 g and not more than 37 g;

(3) Peak impactor acceleration after 5 ms after time zero shall be not less than 30 g and not more than 36 g.

[71 FR 75370, Dec. 14, 2006, as amended at 74 FR 29895, June 23, 2009]

§ 572.196 Thorax without arm.

(a) The thorax is part of the upper torso assembly shown in drawing 180–3000. For this thorax test, the dummy is tested as a complete assembly (drawing 180–0000) with the arm (180–6000) on the impacted side removed. The dummy's thorax is equipped with T1 and T12 laterally oriented accelerometers as specified in 49 CFR 572.200(d) and with deflection potentiometers for the thorax as specified in drawing 180–3881, installed as shown in drawing 180–0000 sheet 2 of 5. When subjected to the test procedure specified in paragraph (b) of this section, the thorax shall meet the performance requirements set forth in paragraph (c) of this section.

(b) *Test procedure.* (1) Soak the dummy assembly (180–0000) in a test environment as specified in 49 CFR 572.200(j).

(2) Seat the dummy, outfitted with the torso jacket (180–3450) and cotton underwear pants on a calibration bench, specified in Figure V3 in appendix A to this subpart, the seat pan and the seatback surfaces of which are covered with a 2-mm-thick PTFE (Teflon) sheet.

(3) Align the outermost portion of the pelvis flesh of the impacted side of the seated dummy tangent to a vertical plane located within 10 mm of the side edge of the bench as shown in Figure V6–A, while the midsagittal plane of the dummy is in vertical orientation.

(4) Push the dummy at the knees and at mid-sternum of the upper torso with just sufficient horizontally oriented force towards the seat back until the back of the upper torso is in contact with the seat back.

(5) While maintaining the dummy's position as specified in paragraphs (b)(3) and (4) of this section, the top of the shoulder rib mount (drawing 180–3352) orientation in the fore-and-aft direction is 24.6 ± 2.0 degrees relative to horizontal, as shown in Figure V6–B in appendix A to this subpart.

(6) Adjust orientation of the legs such that they are symmetrical about the mid-sagittal plane, the thighs touch the seat pan, the inner part of the right and left legs at the knees are as close as possible to each other, the heels touch the designated foot support surface and the feet are vertical and as close together as possible.

(7) The impactor is specified in 49 CFR 572.200(a).

(8) The impactor is guided, if needed, so that at contact with the thorax, its longitudinal axis is within 1 degree of a horizontal plane and perpendicular to the midsagittal plane of the dummy. The centerpoint of the impactor face is within 2 mm of the vertical midpoint of the second thorax rib and coincident with a line parallel to the seat back incline passing through the center of the shoulder yoke assembly arm rotation pivot (drawing 180–3327), as shown in Figure V6–A in appendix A to this subpart.

(9) The dummy's thorax is impacted at 4.3 ± 0.1 m/s.

(10) Allow a period of at least thirty (30) minutes between successive tests of the same thorax assembly.

(c) *Performance criteria.*

(1) While the impactor is in contact with the dummy's thorax, the ribs shall conform to the following range of deflections:

(i) Upper thorax rib not less than 32 mm and not more than 40 mm;

(ii) Middle thorax rib not less than 39 mm and not more than 45 mm;

(iii) Lower thorax rib not less than 35 mm and not more than 43 mm;

(2) Peak acceleration of the upper spine (T1) shall not be less than 13 g and not more than 17 g and the lower spine (T12) not less than 7 g and not more than 11 g;

(3) Peak impactor acceleration shall not be less than 14 g and not more than 18 g.

[71 FR 75370, Dec. 14, 2006, as amended at 74 FR 29895, June 23, 2009]

§ 572.197 Abdomen.

(a) The abdomen assembly is part of the upper torso assembly (180–3000) and is represented by two ribs (180–3368) and two linear deflection potentiometers (180–3881). The abdomen test is conducted on the complete dummy assembly (180–0000) with the arm (180–6000) on the impacted side removed. The dummy is equipped with a lower spine laterally oriented accelerometer as specified in 49 CFR 572.200(d) and deflection potentiometers specified in drawing 180–3881, installed as shown in sheet 2 of drawing 180–0000. When subjected to the test procedure as specified in paragraph (b) of this section, the abdomen shall meet performance requirements of paragraph (c) of this section.

(b) *Test procedure.* (1) Soak the dummy assembly (180–0000) in a test environment as specified in 49 CFR 572.200(j).

(2) Seat the dummy, outfitted with the torso jacket (180–3450) and cotton underwear pants on a calibration bench, specified in Figure V3, the seat pan and the seatback surfaces of which are covered with a 2 mm thick PTFE (Teflon) sheet.

(3) Align the outermost portion of the pelvis flesh of the impacted side of the seated dummy tangent to a vertical plane located within 10 mm of the side edge of the bench as shown in Figure V7–A in Appendix A to this subpart, while the midsagittal plane of the dummy is in vertical orientation.

(4) Push the dummy at the knees and at mid-sternum of the upper torso with just sufficient horizontally oriented force towards the seat back until the back of the upper torso is in contact with the seat back.

(5) While maintaining the dummy's position as specified in paragraph (b)(3) and (4) of this section, the top of the shoulder rib mount (drawing 180–3352) orientation in the fore-and-aft direction is 24.6 ± 2.0 degrees relative to horizontal, as shown in Figure V7–B in appendix A to this subpart);

(6) Adjust orientation of the legs such that they are symmetrical about the mid-sagittal plane, the thighs touch the seat pan, the inner part of the right and left legs at the knees are as close as possible to each other, the heels touch the designated foot support surface and the feet are vertical and as close together as possible;

(7) The impactor is specified in 49 CFR 572.200(b);

(8) The impactor is guided, if needed, so that at contact with the abdomen, its longitudinal axis is within ± 1 degree of a horizontal plane and perpendicular to the midsagittal plane of the dummy and the centerpoint of the impactor's face is within 2 mm of the vertical midpoint between the two abdominal ribs and coincident with a line parallel to the seat back incline passing through the center of the shoulder yoke assembly arm rotation pivot (drawing 180–3327), as shown in Figure V7–A in appendix A to this subpart;

(9) The dummy's abdomen is impacted at 4.3 ± 0.1 m/s.

(10) Allow a period of at least thirty (30) minutes between successive tests of the same abdomen assembly.

(c) *Performance criteria.* (1) While the impact probe is in contact with the dummy's abdomen, the deflection of the upper abdominal rib shall be not less than 36 mm and not more than 47 mm, and the lower abdominal rib not less than 33 mm and not more than 44 mm.

(2) Peak acceleration of the lower spine (T12) laterally oriented accelerometer shall be not less than 9 g and not more than 14 g;

(3) Peak impactor acceleration shall be not less than 12 g and not more than 16 g.

[71 FR 75370, Dec. 14, 2006, as amended at 74 FR 29896, June 23, 2009]

§ 572.198 Pelvis acetabulum.

(a) The acetabulum is part of the lower torso assembly shown in drawing 180–4000. The acetabulum test is conducted by impacting the side of the lower torso of the assembled dummy (drawing 180–0000). The dummy is equipped with a laterally oriented pelvis accelerometer as specified in 49 CFR 572.200(d), acetabulum load cell SA572–S68, mounted as shown in sheet 2 of 5 of drawing 180–0000, and an unused and certified pelvis plug (180–4450). When subjected to the test procedure as specified in paragraph (b) of this section, the pelvis shall meet performance

requirements of paragraph (c) of this section.

(b) *Test procedure.* (1) Soak the dummy assembly (180–0000) in a test environment as specified in 49 CFR 572.200(j).

(2) Seat the dummy, without the torso jacket (180–3450) and without cotton underwear pants, as shown in Figure V8–A in appendix A to this subpart, on a calibration bench, specified in Figure V3 in appendix A to this subpart, with the seatpan and the seatback surfaces covered with a 2-mm-thick PTFE (Teflon) sheet;

(3) Align the outermost portion of the pelvis flesh of the impacted side of the seated dummy tangent to a vertical plane located within 10 mm of the side edge of the bench as shown in Figure V8–A in appendix A to this subpart, while the midsagittal plane of the dummy is in vertical orientation.

(4) Push the dummy at the knees and at mid-sternum of the upper torso with just sufficient horizontally oriented force towards the seat back until the back of the upper torso is in contact with the seat back.

(5) While maintaining the dummy's position as specified in paragraphs (b)(3) and (4) of this section, the top of the shoulder rib mount (drawing 180–3352) orientation in the fore-and-aft direction is 24.6 ± 1.0 degrees relative to horizontal, as shown in Figure V8–B in appendix A to this subpart;

(6) Adjust orientation of the legs such that they are symmetrical about the mid-sagittal plane, the thighs touch the seat pan, the inner part of the right and left legs at the knees are as close as possible to each other, the heels touch the designated foot support surface and the feet are vertical and as close together as possible.

(7) Rotate the arm downward to the lowest detent such that the longitudinal centerline of the arm is parallel to the inferior-superior orientation of the spine box.

(8) The impactor is specified in 49 CFR 572.200(a).

(9) The impactor is guided, if needed, so that at contact with the pelvis, its longitudinal axis is within ±1 degree of a horizontal plane and perpendicular to the midsagittal plane of the dummy. The centerpoint of the impactor's face is in line within 2 mm of the longitudinal centerline of the ¼-20x½ flat head cap screw through the center of the acetabulum load cell (SA572–S68), as shown in Figure V8–A in appendix A to this subpart;

(11) Time zero is defined as the time of contact between the impact probe and the pelvis plug.

(12) Allow a period of at least 120 minutes between successive tests of the same pelvis assembly.

(c) *Performance criteria.* While the impactor is in contact with the pelvis:

(1) Peak acceleration of the impactor is not less than 38 g and not more than 47 g;

(2) Peak lateral acceleration of the pelvis after 6 ms after time zero is not less than 34 g and not more than 42 g;

(3) Peak acetabulum force is not less than 3.60 kN and not more than 4.30 kN.

[71 FR 75370, Dec. 14, 2006, as amended at 74 FR 29896, June 23, 2009]

§ 572.199 Pelvis iliac.

(a) The iliac is part of the lower torso assembly shown in drawing 180–4000. The iliac test is conducted by impacting the side of the lower torso of the assembled dummy (drawing 180–0000). The dummy is equipped with a laterally oriented pelvis accelerometer as specified in 49 CFR 572.200(d), and iliac wing load cell SA572–S66, mounted as shown in sheet 2 of 5 of drawing 180–0000. When subjected to the test procedure as specified in paragraph (b) of this section, the pelvis shall meet performance requirements of paragraph (c) of this section.

(b) *Test procedure.* (1) Soak the dummy assembly (180–0000) in a test environment as specified in 49 CFR 572.200(j).

(2) Seat the dummy, without the torso jacket and without cotton underwear pants, as shown in Figure V9–A in appendix A to this subpart, on a flat, rigid, horizontal surface covered with a 2-mm-thick PTFE (Teflon) sheet.

(3) The legs are outstretched in front of the dummy such that they are symmetrical about the midsagittal plane, the thighs touch the seated surface, the inner part of the right and left legs at the knees are as close as possible to each other, and the feet are in full

dorsiflexion and as close together as possible.

(4) Orient the arm downward to the lowest detent such that the longitudinal centerline of the arm is parallel to the inferior-superior orientation of the spine box.

(5) The midsagittal plane of the dummy is vertical, and superior surface of the lower half neck assembly load cell replacement (180–3815) in the lateral direction is within ±1 degree relative to the horizontal as shown in Figure V9–A.

(6) While maintaining the dummy's position as specified in paragraphs (b)(3), (4) and (5) of this section, the top of the shoulder rib mount (180–3352) orientation in the fore-and-aft direction is within ±1.0 degree relative to horizontal as shown in Figure V9–B in Appendix A to this subpart.

(7) The pelvis impactor is specified in 49 CFR 572.200(c).

(8) The dummy is positioned with respect to the impactor such that the longitudinal centerline of the impact probe is in line with the longitudinal centerline of the iliac load cell access hole, and the 88.9 mm dimension of the probe's impact surface is aligned horizontally.

(9) The impactor is guided, if needed, so that at contact with the pelvis, the longitudinal axis of the impactor is within ±1 degree of a horizontal plane and perpendicular to the midsagittal plane of the dummy.

(10) The dummy's pelvis is impacted at the iliac location at 4.3±0.1 m/s.

(11) Allow a period of at least 120 minutes between successive tests of the same pelvis assembly.

(c) *Performance criteria.* While the impactor is in contact with the pelvis:

(1) Peak acceleration of the impactor is not less than 36 g and not more than 45 g;

(2) Peak acceleration of the pelvis is not less than 28 g and not more than 39 g;

(3) Peak iliac force is not less than 4.10 kN and not more than 5.10 kN.

[71 FR 75370, Dec. 14, 2006, as amended at 74 FR 29896, June 23, 2009]

§ 572.200 Instrumentation and test conditions.

(a) The test probe for shoulder, lateral thorax, and pelvis-acetabulum impact tests is the same as that specified in 49 CFR 572.137(a) except that its impact face diameter is 120.70 ± 0.25 mm and it has a minimum mass moment of inertia of 3646 kg-cm^2.

(b) The test probe for the lateral abdomen impact test is the same as that specified in 572.137(a) except that its impact face diameter is 76.20 ± 0.25 mm and it has a minimum mass moment of inertia of 3646 kg-cm^2.

(c) The test probe for the pelvis-iliac impact tests is the same as that specified in 49 CFR 572.137(a) except that it has a rectangular flat impact surface 50.8 × 88.9 mm for a depth of at least 76 mm and a minimum mass moment of inertia of 5000 kg-cm^2.

(d) Accelerometers for the head, the thoracic spine, and the pelvis conform to specifications of SA572–S4.

(e) Rotary potentiometers for the neck-headform assembly conform to SA572–S51.

(f) Instrumentation and sensors conform to the Recommended Practice SAE J–211 (March 1995), Instrumentation for Impact Test, unless noted otherwise.

(g) All instrumented response signal measurements shall be treated to the following specifications:

(1) Head acceleration—digitally filtered CFC 1000;

(2) Neck-headform assembly translation-rotation—digitally filtered CFC 60;

(3) Neck pendulum, T1 and T12 thoracic spine and pelvis accelerations—digitally filtered CFC 180;

(4) Neck forces (for the purpose of occipital condyle calculation) and moments—digitally filtered at CFC 600;

(5) Pelvis, shoulder, thorax and abdomen impactor accelerations—digitally filtered CFC 180;

(6) Acetabulum and iliac wings forces—digitally filtered at CFC 600;

(7) Shoulder, thorax, and abdomen deflection—digitally filtered CFC 600.

(h) Mountings for the head, thoracic spine and pelvis accelerometers shall have no resonant frequency within a range of 3 times the frequency range of the applicable channel class;

(i) Leg joints of the test dummy are set at the force between 1 to 2 g, which just support the limb's weight when the limbs are extended horizontally forward. The force required to move a limb segment does not exceed 2 g throughout the range of the limb motion.

(j) Performance tests are conducted, unless specified otherwise, at any temperature from 20.6 to 22.2 degrees C. (69 to 72 degrees F.) and at any relative humidity from 10% to 70% after exposure of the dummy to those conditions for a period of 4 hours.

(k) Coordinate signs for instrumentation polarity shall conform to the Sign Convention For Vehicle Crash Testing, Surface Vehicle Information Report, SAE J1733, 1994–12 (refer to § 572.191(a)(5)).

[71 FR 75370, Dec. 14, 2006, as amended at 74 FR 29896, June 23, 2009]

APPENDIX A TO SUBPART V OF PART 572—FIGURES

FIGURE V1
NECK ATTACHED TO HEADFORM ASSEMBLY

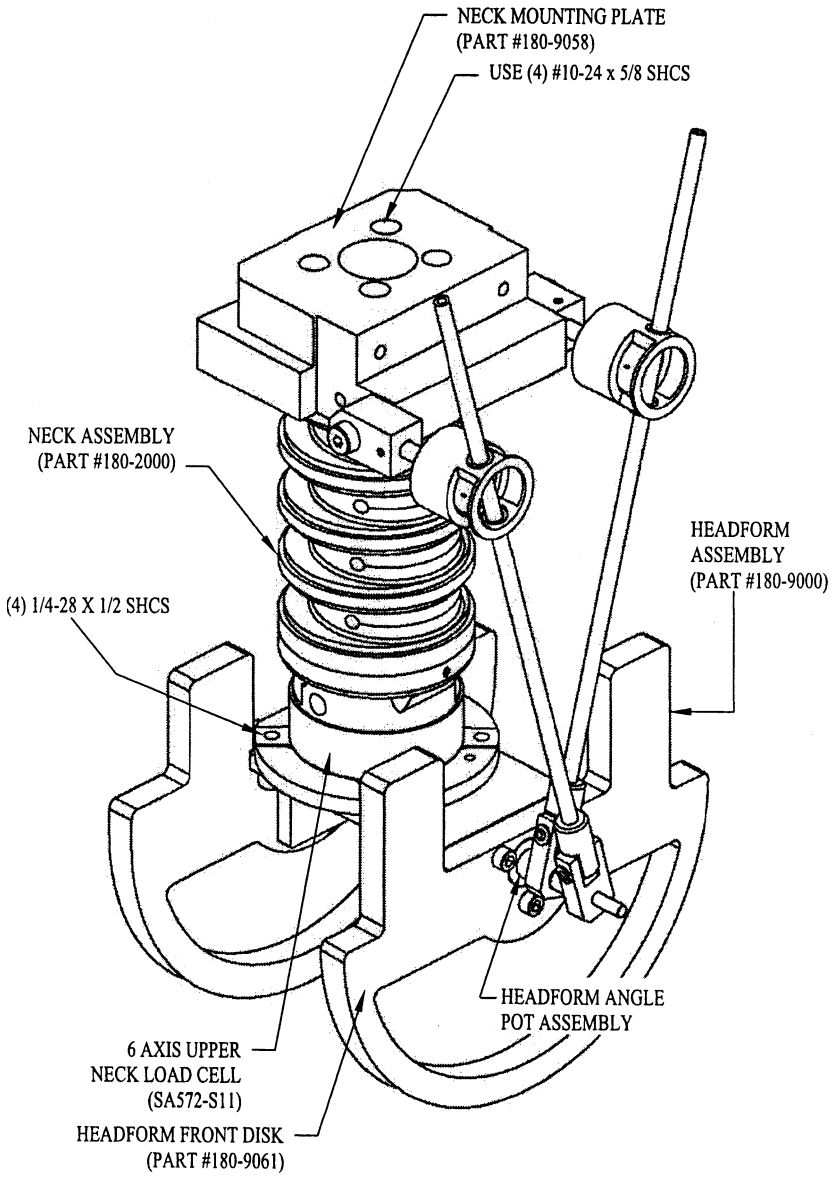

FIGURE V2-A
NECK/HEADFORM ATTACHED TO PENDULUM
FOR LEFT-SIDE IMPACT

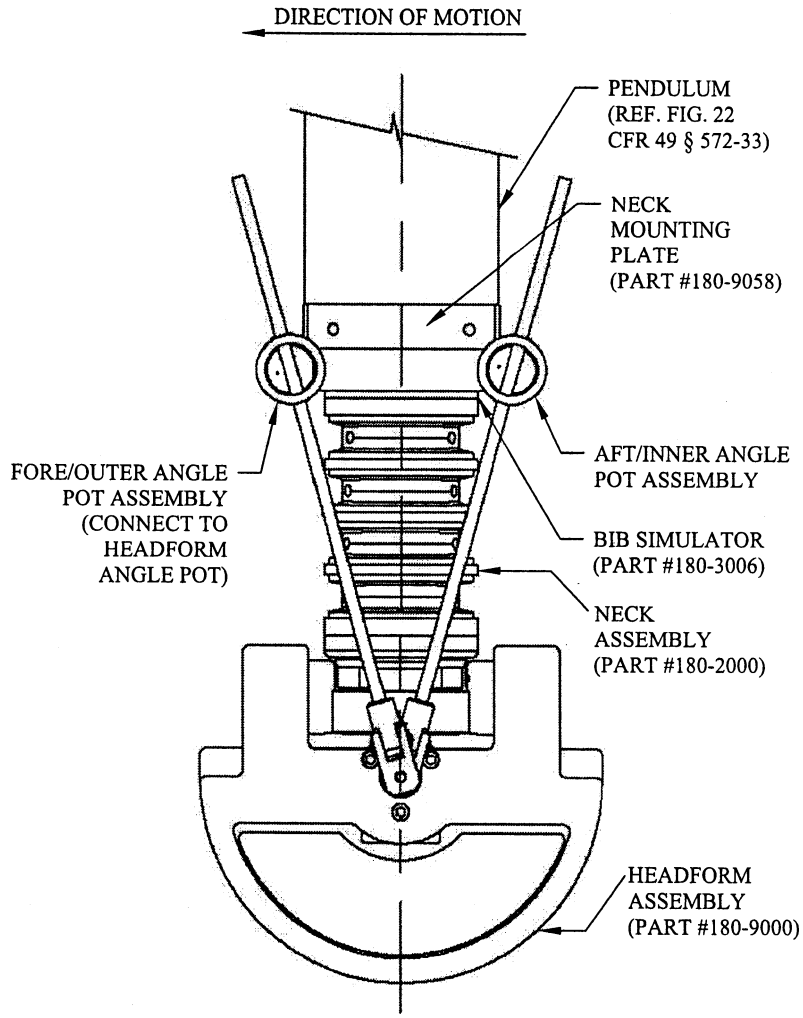

FIGURE V2-B
NECK/HEADFORM ATTACHED TO PENDULUM FOR RIGHT-SIDE IMPACT

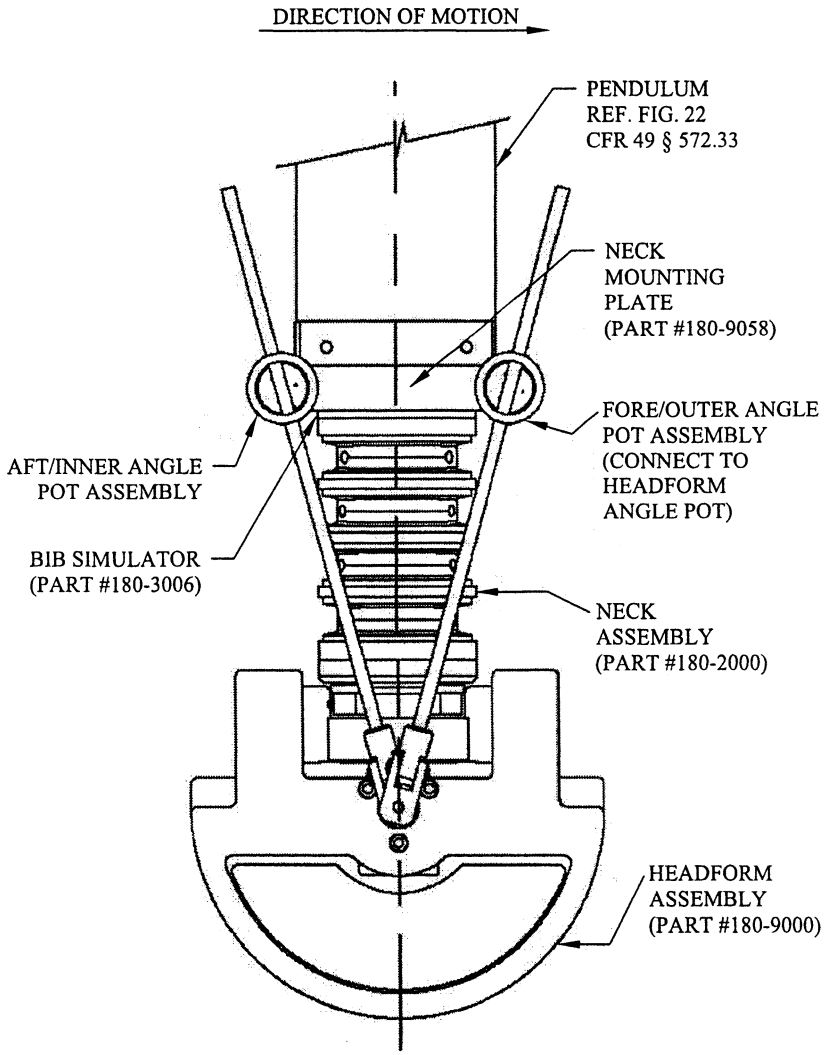

FIGURE V2-C
ANGLE MEASUREMENT WITH HEADFORM SET-UP

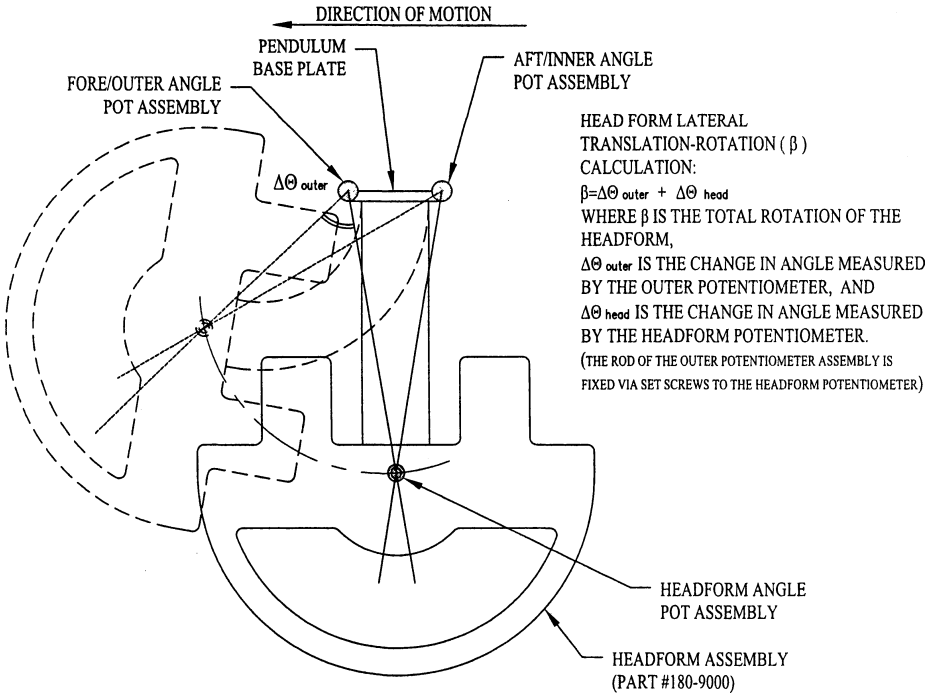

FIGURE V3
CERTIFICATION BENCH

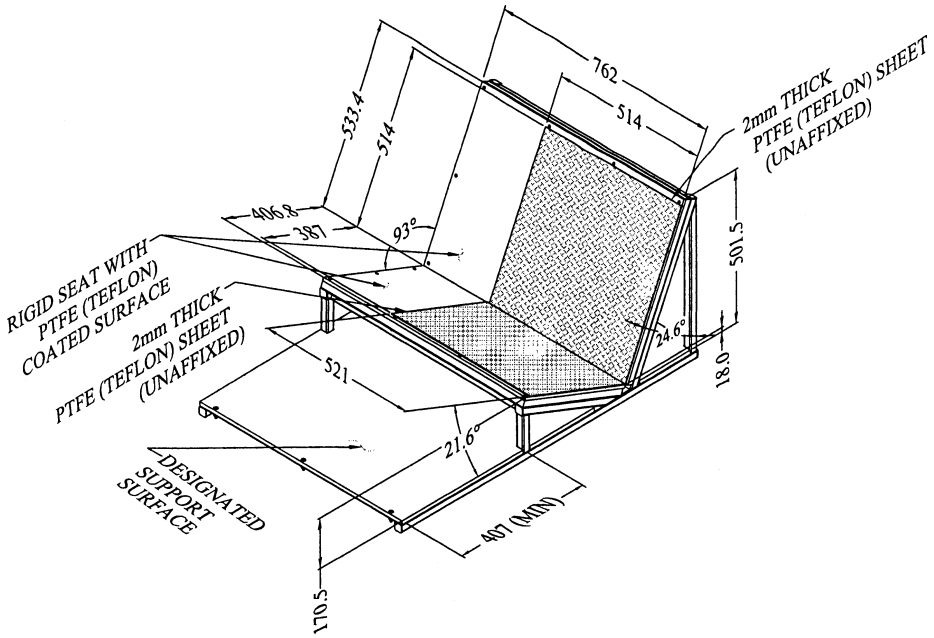

FIGURE V4-A
SHOULDER IMPACT

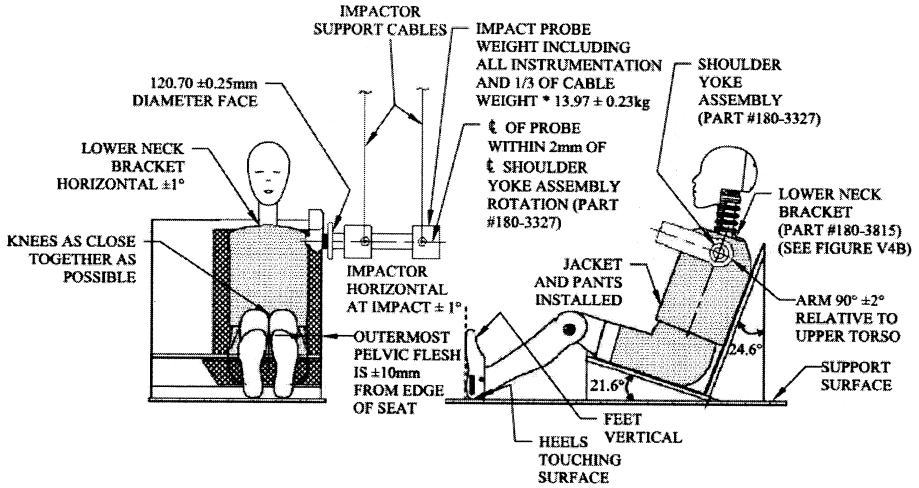

* 1/3 OF CABLE WEIGHT NOT TO EXCEED 5% OF THE TOTAL IMPACTOR PROBE WEIGHT

FIGURE V4-B
SHOULDER IMPACT
(NON-IMPACT SIDE VIEW)

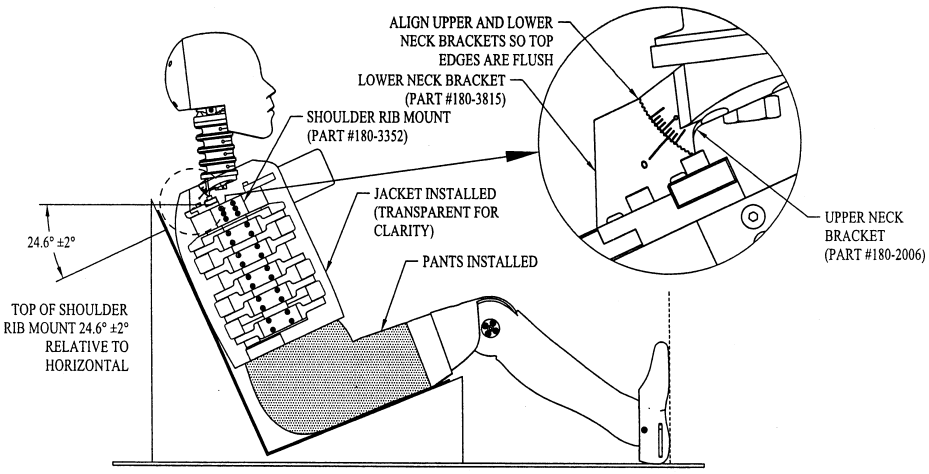

FIGURE V5-A
THORAX WITH ARM IMPACT

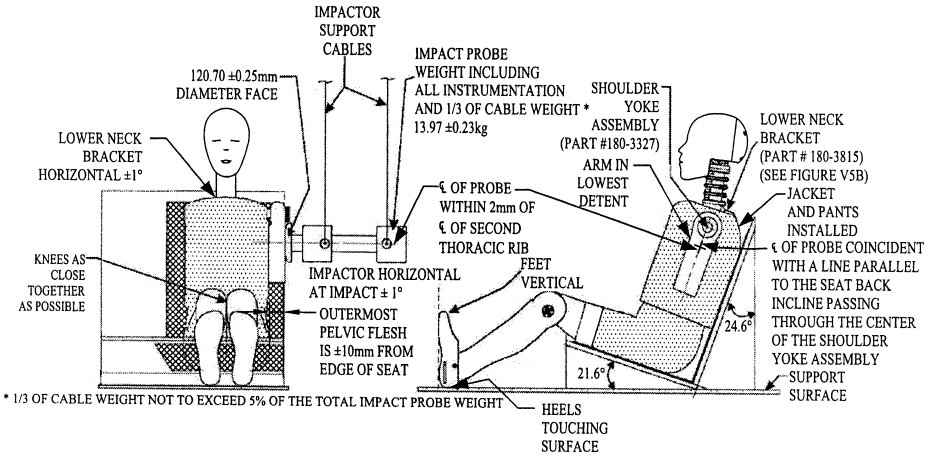

FIGURE V5-B
THORAX WITH ARM IMPACT
(NON-IMPACT SIDE VIEW)

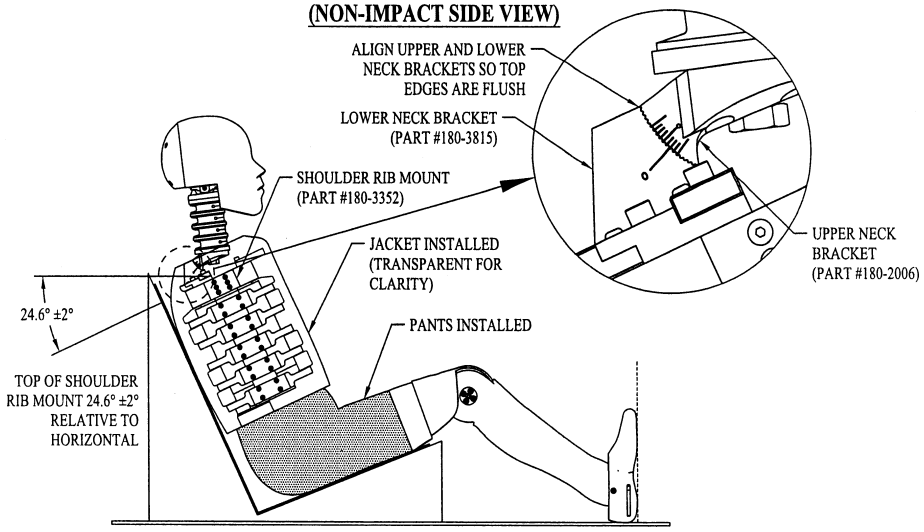

FIGURE V6-A
THORAX WITHOUT ARM IMPACT

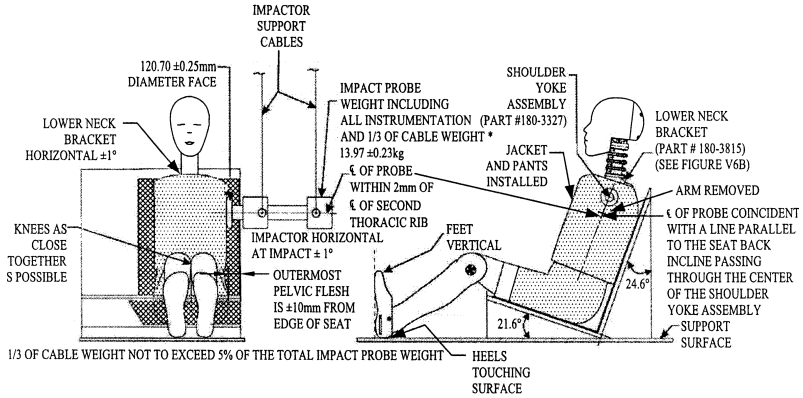

FIGURE V6-B
THORAX WITHOUT ARM IMPACT
(NON-IMPACT SIDE VIEW)

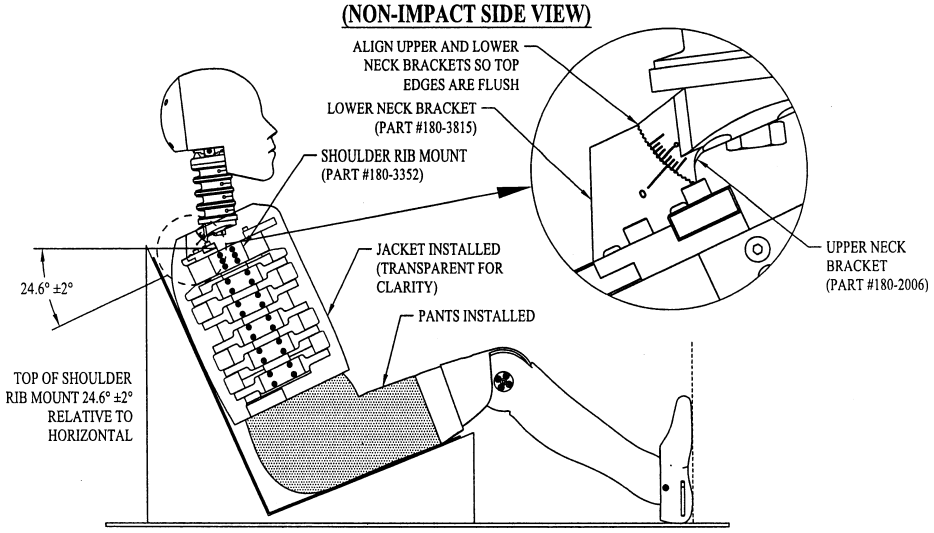

FIGURE V7-A
ABDOMEN IMPACT

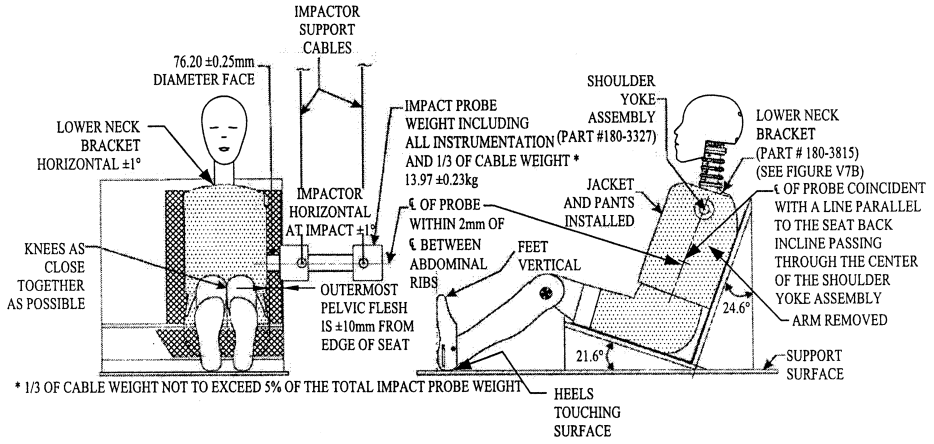

FIGURE V7-B
ABDOMEN IMPACT
(NON-IMPACT SIDE VIEW)

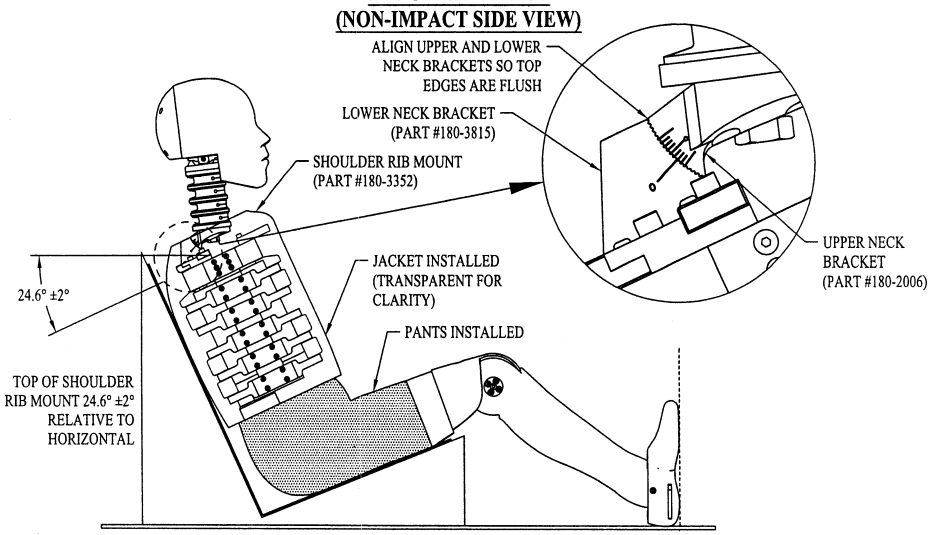

FIGURE V8-A
ACETABULUM IMPACT

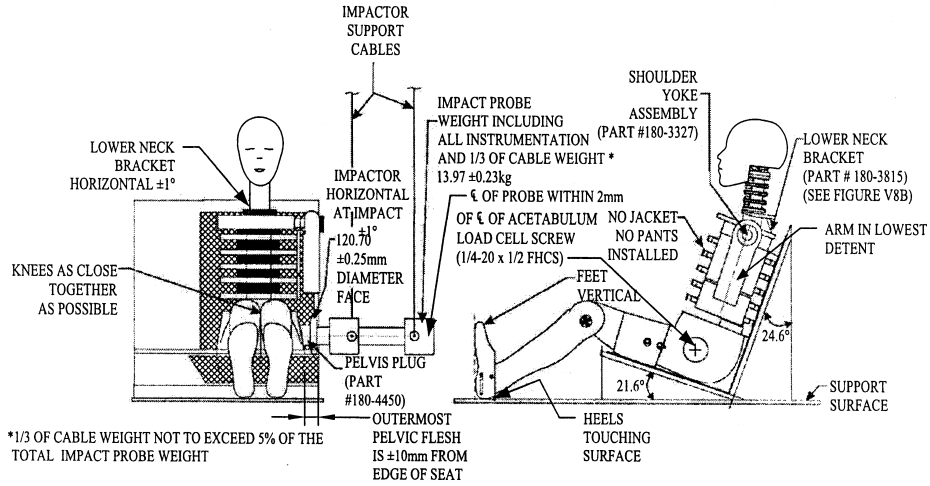

FIGURE V8-B
ACETABULUM IMPACT
(NON-IMPACT SIDE VIEW)

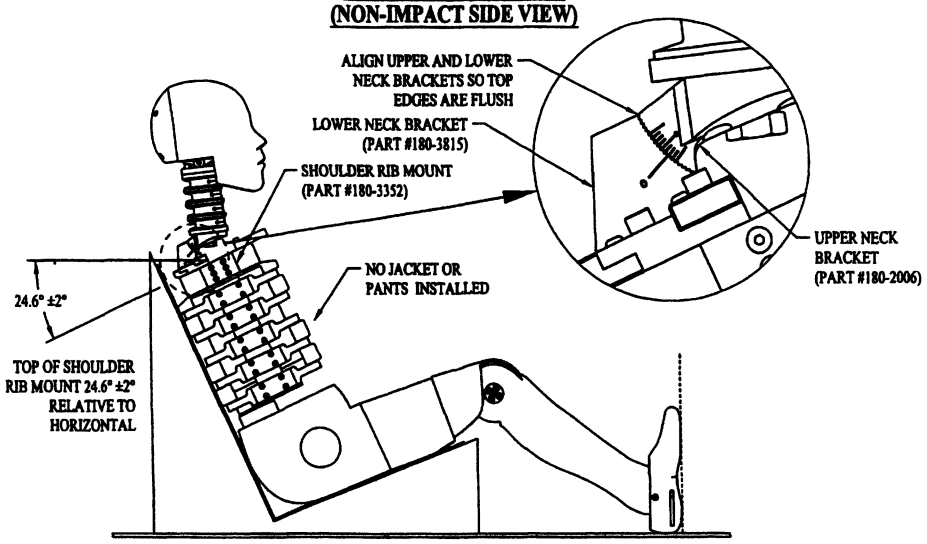

FIGURE V9-A
ILIAC IMPACT

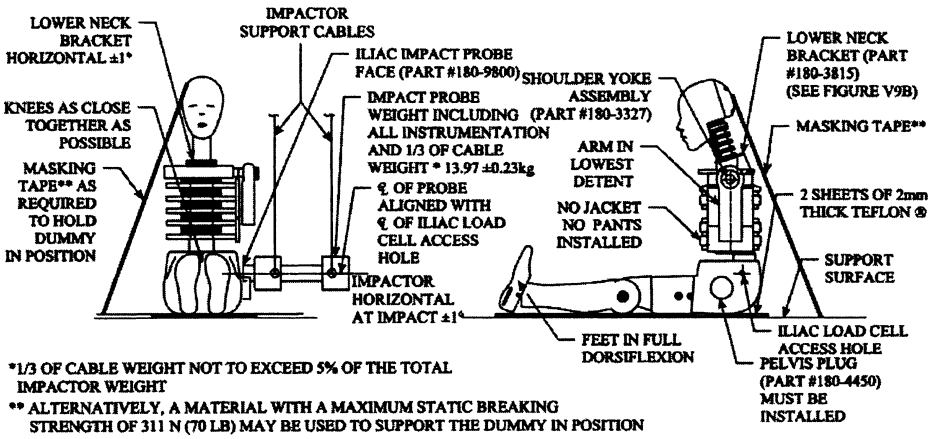

*1/3 OF CABLE WEIGHT NOT TO EXCEED 5% OF THE TOTAL IMPACTOR WEIGHT

** ALTERNATIVELY, A MATERIAL WITH A MAXIMUM STATIC BREAKING STRENGTH OF 311 N (70 LB) MAY BE USED TO SUPPORT THE DUMMY IN POSITION

FIGURE V9-B
ILIAC IMPACT
(NON-IMPACT SIDE VIEW)

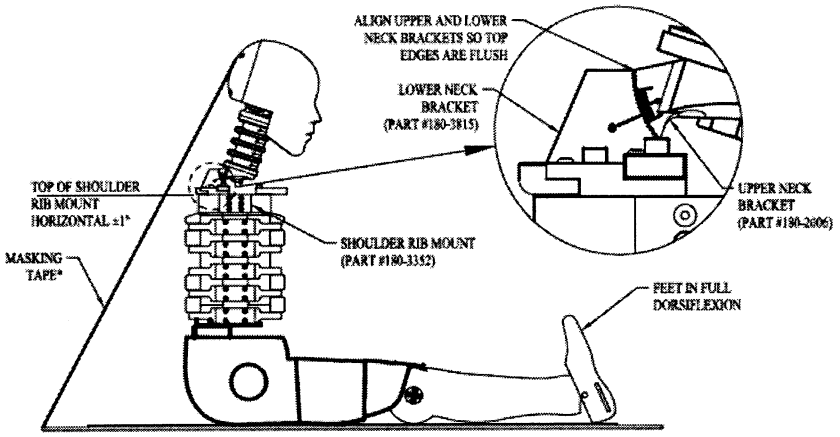

* ALTERNATIVELY, A MATERIAL WITH A MAXIMUM STATIC BREAKING STRENGTH OF 311 N (70 LB) MAY BE USED TO SUPPORT THE DUMMY IN POSITION

[71 FR 75370, Dec. 14, 2006, as amended at 74 FR 29896, June 23, 2009]

PART 573—DEFECT AND NONCOMPLIANCE RESPONSIBILITY AND REPORTS

Sec.

573.1 Scope.
573.2 Purpose.
573.3 Application.
573.4 Definitions.
573.5 Defect and noncompliance responsibility.
573.6 Defect and noncompliance information report.
573.7 Quarterly reports.
573.8 Lists of purchasers, owners, dealers, distributors, lessors and lessees.
573.9 Address for submitting required reports and other information.
573.10 Reporting the sale or lease of defective or noncompliant tires.
573.11 Prohibition on sale or lease of new defective and noncompliant motor vehicles and items of replacement equipment.
573.12 Prohibition on sale or lease of new and used defective and noncompliant motor vehicle equipment.
573.13 Reimbursement for prenotification remedies.
573.14 Accelerated remedy program.

AUTHORITY: 49 U.S.C. 30102, 30103, 30116–30121, 30166; delegation of authority at 49 CFR 1.50 and 49 CFR 501.8.

SOURCE: 43 FR 60169, Dec. 26, 1978, unless otherwise noted.

§ 573.1 Scope.

This part:

(a) Sets forth the responsibilities under 49 U.S.C. 30116–30121 of manufacturers of motor vehicles and motor vehicle equipment with respect to safety-related defects and noncompliances with Federal motor vehicle safety standards in motor vehicles and items of motor vehicle equipment; and

(b) Specifies requirements for—

(1) Manufacturers to maintain lists of owners, purchasers, dealers, and distributors notified of defective and noncomplying motor vehicles and motor vehicle original and replacement equipment,

(2) Reporting to the National Highway Traffic Safety Administration (NHTSA) defects in motor vehicles and motor vehicle equipment and noncompliances with motor vehicle safety standards prescribed under part 571 of this chapter, and

(3) Providing quarterly reports on defect and noncompliance notification campaigns.

[69 FR 34959, June 23, 2004]

§ 573.2 Purposes.

The purposes of this part are:

(a) To facilitate the notification of owners of defective and noncomplying motor vehicles and items of motor vehicle equipment, and the remedy of such defects and noncompliances, by equitably apportioning the responsibility for safety-related defects and noncompliances with Federal motor vehicle safety standards among manufacturers of motor vehicles and motor vehicle equipment; and

(b) To inform NHTSA of defective and noncomplying motor vehicles and items of motor vehicle equipment, and to obtain information for NHTSA on the adequacy of manufacturers' defect and noncompliance notification campaigns, on corrective action, on owner response, and to compare the defect incidence rate among different groups of vehicles.

[67 FR 45872, July 10, 2002]

§ 573.3 Application.

(a) Except as provided in paragraphs (g), (h), and (i) of this section, this part applies to manufacturers of complete motor vehicles, incomplete motor vehicles, and motor vehicle original and replacement equipment, with respect to all vehicles and equipment that have been transported beyond the direct control of the manufacturer.

(b) In the case of a defect or noncompliance decided to exist in a motor vehicle or equipment item imported into the United States, compliance with §§ 573.6 and 573.7 by either the fabricating manufacturer or the importer of the vehicle or equipment item shall be considered compliance by both.

(c) In the case of a defect or noncompliance decided to exist in a vehicle manufactured in two or more stages, compliance with §§ 573.6 and 573.7 by either the manufacturer of the incomplete vehicle or any subsequent manufacturer of the vehicle shall be considered compliance by all manufacturers.

(d) In the case of a defect or noncompliance decided to exist in an item of replacement equipment (except tires) compliance with §§ 573.6 and 573.7 by the brand name or trademark owner shall be considered compliance by the manufacturer. Tire brand name owners are considered manufacturers (49 U.S.C. 10102(b)(1)(E)) and have the same reporting requirements as manufacturers.

(e) In the case of a defect or noncompliance decided to exist in an item of original equipment used in the vehicles of only one vehicle manufacturer, compliance with §§ 573.6 and 573.7 by either the vehicle or equipment manufacturer shall be considered compliance by both.

(f) In the case of a defect or noncompliance decided to exist in original equipment installed in the vehicles of more than one manufacturer, compliance with § 573.6 is required of the equipment manufacturer as to the equipment item, and of each vehicle manufacturer as to the vehicles in which the equipment has been installed. Compliance with § 573.7 is required of the manufacturer who is conducting the recall campaign.

(g) The provisions of § 573.10 apply to all persons.

(h) The provisions of § 573.11 apply to dealers, including retailers of motor vehicle equipment.

(i) The provisions of § 573.12 apply to all persons.

[43 FR 60169, Dec. 26, 1978, as amended at 60 FR 17268, Apr. 5, 1995; 66 FR 38162, July 23, 2001; 67 FR 19697, Apr. 23, 2002; 68 FR 18142, Apr. 15, 2003]

§ 573.4 Definitions.

For purposes of this part:

Act means 49 U.S.C. Chapter 301.

Administrator means the Administrator of the National Highway Traffic Safety Administration or his delegate.

First purchaser means first purchaser for purposes other than resale.

Leased motor vehicle means any motor vehicle that is leased to a person for a term of at least four months by a lessor who has leased five or more vehicles in the twelve months preceding the date of notification by the vehicle manufacturer of the existence of a safety-related defect or noncompliance

with a Federal motor vehicle safety standard in the motor vehicle.

Lessee means a person who is the lessee of a leased motor vehicle as defined in this section.

Lessor means a person or entity that is the owner, as reflected on the vehicle's title, of any five or more leased vehicles (as defined in this section), as of the date of notification by the manufacturer of the existence of a safety-related defect or noncompliance with a Federal motor vehicle safety standard in one or more of the leased motor vehicles.

Original equipment means an item of motor vehicle equipment (other than a tire) that was installed in or on a motor vehicle at the time of its delivery to the first purchaser if the item of equipment was installed on or in the motor vehicle at the time of its delivery to a dealer or distributor for distribution, or was installed by the dealer or distributor with the express authorizations of the motor vehicle manufacturer.

Readable form means a form readable by the unassisted eye or readable by machine. If readable by machine, the submitting party must obtain written confirmation from the Office of Defects Investigation immediately prior to submission that the machine is readily available to NHTSA. For all similar information responses, once a manufacturer has obtained approval for the original response in that form, it will not have to obtain approval for future submissions in the same form. In addition, all coded information must be accompanied by an explanation of the codes used.

Replacement equipment means motor vehicle equipment other than original equipment as defined in this section, and tires.

[43 FR 60169, Dec. 26, 1978, as amended at 60 FR 17268, Apr. 5, 1995; 67 FR 45872, July 10, 2002]

§ 573.5 Defect and noncompliance responsibility.

(a) Each manufacturer of a motor vehicle shall be responsible for any safety-related defect or any noncompliance determined to exist in the vehicle or in any item of original equipment.

(b) Each manufacturer of an item of replacement equipment shall be responsible for any safety-related defect or any noncompliance determined to exist in the equipment.

[67 FR 45872, July 10, 2002]

§ 573.6 Defect and noncompliance information report.

(a) Each manufacturer shall furnish a report to the NHTSA for each defect in his vehicles or in his items of original or replacement equipment that he or the Administrator determines to be related to motor vehicle safety, and for each noncompliance with a motor vehicle safety standard in such vehicles or items of equipment which either he or the Administrator determines to exist.

(b) Each report shall be submitted not more than 5 working days after a defect in a vehicle or item of equipment has been determined to be safety related, or a noncompliance with a motor vehicle safety standard has been determined to exist. At a minimum, information required by paragraphs (1), (2) and (5) of paragraph (c) of this section shall be submitted in the initial report. The remainder of the information required by paragraph (c) of this section that is not available within the five-day period shall be submitted as it becomes available. Each manufacturer submitting new information relative to a previously submitted report shall refer to the notification campaign number when a number has been assigned by the NHTSA.

(c) Each manufacturer shall include in each report the information specified below.

(1) The manufacturer's name: The full corporate or individual name of the fabricating manufacturer and any brand name or trademark owner of the vehicle or item of equipment shall be spelled out, except that such abbreviations as ''Co.'' or ''Inc.'', and their foreign equivalents, and the first and middle initials of individuals, may be used. In the case of a defect or noncompliance decided to exist in an imported vehicle or item of equipment, the agency designated by the fabricating manufacturer pursuant to 49 U.S.C. section 30164(a) shall be also stated. If the fabricating manufacturer is a corporation

that is controlled by another corporation that assumes responsibility for compliance with all requirements of this part the name of the controlling corporation may be used.

(2) Identification of the vehicles or items of motor vehicle equipment potentially containing the defect or noncompliance, including a description of the manufacturer's basis for its determination of the recall population and a description of how the vehicles or items of equipment to be recalled differ from similar vehicles or items of equipment that the manufacturer has not included in the recall.

(i) In the case of passenger cars, the identification shall be by the make, line, model year, the inclusive dates (month and year) of manufacture, and any other information necessary to describe the vehicles.

(ii) In the case of vehicles other than passenger cars, the identification shall be by body style or type, inclusive dates (month and year) of manufacture and any other information necessary to describe the vehicles, such as GVWR or class for trucks, displacement (cc) for motorcycles, and number of passengers for buses.

(iii) In the case of items of motor vehicle equipment, the identification shall be by the generic name of the component (tires, child seating systems, axles, *etc.*), part number (for tires, a range of tire identification numbers, as required by 49 CFR 574.5), size and function if applicable, the inclusive dates (month and year) of manufacture if available and any other information necessary to describe the items.

(iv) In the case of motor vehicles or items of motor vehicle equipment in which the component that contains the defect or noncompliance was manufactured by a different manufacturer from the reporting manufacturer, the reporting manufacturer shall identify the component and, if known, the component's country of origin (*i.e.* final place of manufacture or assembly), the manufacturer and/or assembler of the component by name, business address, and business telephone number. If the reporting manufacturer does not know the identity of the manufacturer of the component, it shall identify the entity from which it was obtained. If at the time of submission of the initial report, the reporting manufacturer does not know the country of origin of the component, the manufacturer shall ascertain the country of origin and submit a supplemental report with that information once it becomes available.

(v) In the case of items of motor vehicle equipment, the manufacturer of the equipment shall identify by name, business address, and business telephone number every manufacturer that purchases the defective or noncomplying component for use or installation in new motor vehicles or new items of motor vehicle equipment.

(3) The total number of vehicles or items of equipment potentially containing the defect or noncompliance, and where available the number of vehicles or items of equipment in each group identified pursuant to paragraph (c)(2) of this section.

(4) The percentage of vehicles or items of equipment specified pursuant to paragraph (c)(2) of this section estimated to actually contain the defect or noncompliance.

(5) A description of the defect or noncompliance, including both a brief summary and a detailed description, with graphic aids as necessary, of the nature and physical location (if applicable) of the defect or noncompliance.

(6) In the case of a defect, a chronology of all principal events that were the basis for the determination that the defect related to motor vehicle safety, including a summary of all warranty claims, field or service reports, and other information, with their dates of receipt.

(7) In the case of a noncompliance, the test results and other information that the manufacturer considered in determining the existence of the noncompliance. The manufacturer shall identify the date of each test and observation that indicated that a noncompliance might or did exist.

(8)(i) A description of the manufacturer's program for remedying the defect or noncompliance. This program shall include a plan for reimbursing an owner or purchaser who incurred costs

to obtain a remedy for the problem addressed by the recall within a reasonable time in advance of the manufacturer's notification of owners, purchasers and dealers, in accordance with § 573.13 of this part. A manufacturer's plan may incorporate by reference a general reimbursement plan it previously submitted to NHTSA, together with information specific to the individual recall. Information required by § 573.13 that is not in a general reimbursement plan shall be submitted in the manufacturer's report to NHTSA under this section. If a manufacturer submits one or more general reimbursement plans, the manufacturer shall update each plan every two years, in accordance with § 573.13. The manufacturer's remedy program and reimbursement plans will be available for inspection by the public at NHTSA headquarters.

(ii) The estimated date(s) on which it will begin sending notifications to owners, and to dealers and distributors, that there is a safety-related defect or noncompliance and that a remedy without charge will be available to owners, and the estimated date(s) on which it will complete such notifications (if different from the beginning date). If a manufacturer subsequently becomes aware that either the beginning or the completion dates reported to the agency for any of the notifications will be delayed by more than two weeks, it shall promptly advise the agency of the delay and the reasons therefore, and furnish a revised estimate.

(iii) If a manufacturer intends to file a petition for an exemption from the recall requirements of the Act on the basis that a defect or noncompliance is inconsequential as it relates to motor vehicle safety, it shall notify NHTSA of that intention in its report to NHTSA of the defect or noncompliance under this section. If such a petition is filed and subsequently denied, the manufacturer shall provide the information required by paragraph (c)(8)(ii) of this section within five Federal government business days from the date the petition denial is published in the FEDERAL REGISTER.

(iv) If a manufacturer advises NHTSA that it intends to file such a petition for exemption from the notification and remedy requirements on the grounds that the defect or noncompliance is inconsequential as it relates to motor vehicle safety, and does not do so within the 30-day period established by 49 CFR 556.4(c), the manufacturer must submit the information required by paragraph (c)(8)(ii) of this section no later than the end of that 30-day period.

(9) In the case of a remedy program involving the replacement of tires, the manufacturer's program for remedying the defect or noncompliance shall:

(i) Address how the manufacturer will assure that the entities replacing the tires are aware of the legal requirements related to recalls of tires established by 49 U.S.C. Chapter 301 and regulations thereunder. At a minimum, the manufacturer shall notify its owned stores and/or distributors, as well as all independent outlets that are authorized to replace the tires that are the subject of the recall, annually or for each individual recall that the manufacturer conducts, about the ban on the sale of new defective or noncompliant tires (49 CFR 573.11); the prohibition on the sale of new and used defective and noncompliant tires (49 CFR 573.12); and the duty to notify NHTSA of any sale of a new or used recalled tire for use on a motor vehicle (49 CFR 573.10). For tire outlets that are manufacturer-owned or otherwise subject to the control of the manufacturer, the manufacturer shall also provide directions to comply with these statutory provisions and the regulations thereunder.

(ii) Address how the manufacturer will prevent, to the extent reasonably within its control, the recalled tires from being resold for installation on a motor vehicle. At a minimum, the manufacturer shall include the following information, to be furnished to each tire outlet that it owns, or that is authorized to replace tires that are recalled, either annually or for each individual recall the manufacturer conducts:

(A) Written directions to manufacturer-owned and other manufacturer-controlled outlets to alter the recalled tires permanently so that they cannot be used on vehicles. These shall include

instructions on the means to render recalled tires unsuitable for resale for installation on motor vehicles and instructions to perform the incapacitation of each recalled tire, with the exception of any tires that are returned to the manufacturer pursuant to a testing program, within 24 hours of receipt of the recalled tire at the outlet. If the manufacturer has a testing program for recalled tires, these directions shall also include criteria for selecting recalled tires for testing and instructions for labeling those tires and returning them promptly to the manufacturer for testing.

(B) Written guidance to all other outlets which are authorized to replace the recalled tires on how to alter the recalled tires promptly and permanently so that they cannot be used on vehicles.

(C) A requirement that manufacturer-owned and other manufacturer-controlled outlets report to the manufacturer, either on a monthly basis or within 30 days of the deviation, the number of recalled tires removed from vehicles by the outlet that have not been rendered unsuitable for resale for installation on a motor vehicle within the specified time frame (other than those returned for testing) and describe any such failure to act in accordance with the manufacturer's plan;

(iii) Address how the manufacturer will limit, to the extent reasonably within its control, the disposal of the recalled tires in landfills and, instead, channel them into a category of positive reuse (shredding, crumbling, recycling, and recovery) or another alternative beneficial non-vehicular use. At a minimum, the manufacturer shall include the following information, to be furnished to each tire outlet that it owns or that is authorized to replace tires that are recalled, either annually or for each individual recall that the manufacturer conducts:

(A)(*1*) Written directions that require manufacturer-owned and other manufacturer-controlled outlets either:

(*i*) To ship recalled tires to one or more locations designated by the manufacturer as part of the program or allow the manufacturer to collect and dispose of the recalled tires; or

(*ii*) To ship recalled tires to a location of their own choosing, provided that they comply with applicable state and local laws and regulations regarding disposal of tires.

(*2*) Under option (c)(9)(iii)(A)(*1*)(*ii*) of this section, the directions must also include further direction and guidance on how to limit the disposal of recalled tires in landfills and, instead, channel them into a category of positive reuse (shredding, crumbling, recycling, and recovery) or another alternative beneficial non-vehicular use.

(B)(*1*) Written guidance that authorizes all other outlets that are authorized to replace the recalled tires either:

(*i*) To ship recalled tires to one or more locations designated by the manufacturer or allow the manufacturer to collect and dispose of the recalled tires; or

(*ii*) To ship recalled tires to a location of their own choosing, provided that they comply with applicable state and local laws and regulations regarding disposal of tires.

(*2*) Under option (c)(9)(iii)(B)(*1*)(*ii*) of this section, the manufacturer must also include further guidance on how to limit the disposal of recalled tires in landfills and, instead, channel them into a category of positive reuse (shredding, crumbling, recycling, and recovery) or another alternative beneficial non-vehicular use.

(C) A requirement that manufacturer-owned and other manufacturer-controlled outlets report to the manufacturer, on a monthly basis or within 30 days of the deviation, the number of recalled tires disposed of in violation of applicable state and local laws and regulations, and describe any such failure to act in accordance with the manufacturer's plan; and

(D) A description of the manufacturer's program for disposing of the recalled tires that are returned to the manufacturer or collected by the manufacturer from the retail outlets, including, at a minimum, statements that the returned tires will be disposed of in compliance with applicable state and local laws and regulations regarding disposal of tires, and will be channeled, insofar as possible, into a category of positive reuse (shredding, crumbling, recycling and recovery) or

another alternative beneficial non-vehicular use, instead of being disposed of in landfills.

(iv) To the extent that the manufacturer wishes to limit the frequency of shipments of recalled tires, it must specify both a minimum time period and a minimum weight for the shipments and provide that shipments may be made at whichever minimum occurs first.

(v) Written directions required under this paragraph to be furnished to a manufacturer-owned or controlled outlet shall be sent to the person in charge of each outlet by first-class mail or by electronic means, such as FAX transmissions or e-mail, with further instructions to notify all employees of the outlet who are involved with removal, rendering unsuitable for use, or disposition of recalled tires of the applicable requirements and procedures.

(vi) Manufacturers must implement the plans for disposition of recalled tires that they file with NHTSA pursuant to this paragraph. The failure of a manufacturer to implement its plan in accordance with its terms constitutes a violation of the Safety Act.

(10) A representative copy of all notices, bulletins, and other communications that relate directly to the defect or noncompliance and are sent to more than one manufacturer, distributor, dealer or purchaser. These copies shall be submitted to NHTSA's Recall Management Division (NVS–215) (RMD), not later than 5 days after they are initially sent to manufacturers, distributors, dealers, or purchasers. Submission shall be made by any means, including those means identified in § 573.9 of this part, which permits the manufacturer to verify promptly that the copy was in fact received by RMD and the date it was received by RMD.

(11) The manufacturer's campaign number, if not identical to the identification number assigned by NHTSA.

[43 FR 60169, Dec. 26, 1978, as amended at 44 FR 20437, Apr. 5, 1979; 48 FR 44081, Sept. 27, 1983; 60 FR 17268, Apr. 5, 1995; 61 FR 278, Jan. 4, 1996. Redesignated at 67 FR 45872, July 10, 2002, as amended at 67 FR 64063, Oct. 17, 2002; 69 FR 34959, June 23, 2004; 69 FR 50084, Aug. 13, 2004; 70 FR 38814, July 6, 2005; 72 FR 32016, June 11, 2007; 74 FR 47757, Sept. 17, 2009]

§ 573.7 Quarterly reports.

(a) Each manufacturer who is conducting a defect or noncompliance notification campaign to manufacturers, distributors, dealers, or owners shall submit to NHTSA a report in accordance with paragraphs (b), (c), and (d) of this section. Unless otherwise directed by the NHTSA, the information specified in paragraphs (b)(1) through (5) of this section shall be included in the quarterly report, with respect to each notification campaign, for each of six consecutive quarters beginning with the quarter in which the campaign was initiated (i.e., the date of initial mailing of the defect or noncompliance notification to owners) or corrective action has been completed on all defective or noncomplying vehicles or items of replacement equipment involved in the campaign, whichever occurs first.

(b) Each report shall include the following information identified by and in the order of the subparagraph headings of this paragraph.

(1) The notification campaign number assigned by NHTSA.

(2) The date notification began and the date completed.

(3) The number of vehicles or items of equipment involved in the notification campaign.

(4) The number of vehicles and equipment items which have been inspected and repaired and the number of vehicles and equipment items inspected and determined not to need repair.

(5) The number of vehicles or items of equipment determined to be unreachable for inspection due to export, theft, scrapping, failure to receive notification, or other reasons (specify). The number of vehicles or items or equipment in each category shall be specified.

(6) In reports by equipment manufacturers, the number of items of equipment repaired and/or returned by dealers, other retailers, and distributors to the manufacturer prior to their first sale to the public.

(7) For all recalls that involve the replacement of tires, the manufacturer shall provide:

(i) The aggregate number of recalled tires that the manufacturer becomes aware have not been rendered unsuitable for resale for installation on a

motor vehicle in accordance with the manufacturer's plan provided to NHTSA pursuant to §573.6(c)(9);

(ii) The aggregate number of recalled tires that the manufacturer becomes aware have been disposed of in violation of applicable state and local laws and regulations; and

(iii) A description of any failure of a tire outlet to act in accordance with the directions in the manufacturer's plan, including an identification of the outlet(s) in question.

(c) Information supplied in response to the paragraphs (b)(4) and (5) of this section shall be cumulative totals.

(d) The reports required by this section shall be submitted in accordance with the following schedule, except that if the due date specified below falls on a Saturday, Sunday or Federal holiday, the report shall be submitted on the next day that is a business day for the Federal government:

(1) For the first calendar quarter (January 1 through March 31), on or before April 30;

(2) For the second calendar quarter (April 1 through June 30), on or before July 30;

(3) For the third calendar quarter (July 1 through September 30), on or before October 30; and

(4) For the fourth calendar quarter (October 1 through December 31), on or before January 30.

[51 FR 398, Jan. 6, 1986, as amended at 60 FR 17269, Apr. 5, 1995. Redesignated at 67 FR 45872, July 10, 2002, as amended at 69 FR 50085, Aug. 13, 2004]

§573.8 Lists of purchasers, owners, dealers, distributors, lessors, and lessees.

(a) Each manufacturer of motor vehicles shall maintain, in a form suitable for inspection such as computer information storage devices or card files, a list of the names and addresses of registered owners, as determined through State motor vehicle registration records or other sources or the most recent purchasers where the registered owners are unknown, for all vehicles involved in a defect or noncompliance notification campaign initiated after the effective date of this part. The list shall include the vehicle identification number for each vehicle and the status of remedy with respect to each vehicle, updated as of the end of each quarterly reporting period specified in §573.7. Each vehicle manufacturer shall also maintain such a list of the names and addresses of all dealers and distributors to which a defect or noncompliance notification was sent. Each list shall be retained for 5 years, beginning with the date on which the defect or noncompliance information report required by §573.6 is initially submitted to NHTSA.

(b) Each manufacturer (including brand name owners) of tires shall maintain, in a form suitable for inspection such as computer information storage devices or card files, a list of the names and addresses of the first purchasers of his tires for all tires involved in a defect or noncompliance notification campaign initiated after the effective date of this part. The list shall include the tire identification number of all tires and shall show the status of remedy with respect to each owner involved in each notification campaign, updated as of the end of each quarterly reporting period specified in §573.6. Each list shall be retained, beginning with the date on which the defect information report is initially submitted to the NHTSA, for 3 years.

(c) For each item of equipment involved in a defect or noncompliance notification campaign initiated after the effective date of this part, each manufacturer of motor vehicle equipment other than tires shall maintain, in a form suitable for inspection, such as computer information storage devices or card files, a list of the names and addresses of each distributor and dealer of such manufacturer, each motor vehicle or motor vehicle equipment manufacturer and most recent purchaser known to the manufacturer to whom a potentially defective or noncomplying item of equipment has been sold and to whom notification is sent, the number of such items sold to each, and the date of shipment. The list shall show as far as is practicable the number of items remedied or returned to the manufacturer and the dates of such remedy or return. Each list shall be retained, beginning with the date on which the defect report required by

§ 573.5 is initially submitted to the NHTSA, for 5 years.

(d) Each lessor of leased motor vehicles that receives a notification from the manufacturer of such vehicles that the vehicle contains a safety-related defect or fails to comply with a Federal motor vehicle safety standard shall maintain, in a form suitable for inspection, such as computer information storage devices or card files, a list of the names and addresses of all lessees to which the lessor has provided notification of a defect or noncompliance pursuant to 49 CFR 577.5(h). The list shall also include the make, model, model year, and vehicle identification number of each such leased vehicle, and the date on which the lessor mailed notification of the defect or noncompliance to the lessee. The information required by this paragraph must be retained by the lessor for one calendar year from the date the vehicle lease expires.

[43 FR 60169, Dec. 26, 1978, as amended at 44 FR 20437, Apr. 5, 1979; 60 FR 17269, Apr. 5, 1995; 61 FR 278, Jan. 4, 1996. Redesignated at 67 FR 45872, July 10, 2002; 69 FR 34959, June 23, 2004]

§ 573.9 Address for submitting required reports and other information.

All submissions, except as otherwise required by this part, shall be addressed to the Associate Administrator for Enforcement, National Highway Traffic Safety Administration, Attention: Recall Management Division (NVS–215), 1200 New Jersey Avenue, SE., Washington, DC 20590. These submissions may be submitted as an attachment to an e-mail message to *RMD.ODI@dot.gov* in a portable document format (.pdf). Whether or not they are also submitted electronically, defect or noncompliance reports required by section 573.6 of this part must be submitted by certified mail in accordance with 49 U.S.C. 30118(c).

[72 FR 32016, June 11, 2007]

§ 573.10 Reporting the sale or lease of defective or noncompliant tires.

(a) *Reporting requirement.* Subject to paragraph (b) of this section, any person who knowingly and willfully sells or leases for use on a motor vehicle a defective tire or a tire that is not compliant with an applicable tire safety standard with actual knowledge that the manufacturer of such tire has notified its dealers of such defect or noncompliance as required under 49 U.S.C. 30118(c) or as required by an order under 49 U.S.C. 30118(b) must report that sale or lease to the Associate Administrator for Enforcement, NHTSA, 1200 New Jersey Ave., SE., Washington, DC 20590.

(b) *Exclusions from reporting requirement.* Paragraph (a) of this section is not applicable where, before delivery under a sale or lease of a tire:

(1) The defect or noncompliance of the tire is remedied as required under 49 U.S.C. 30120; or

(2) Notification of the defect or noncompliance is required by an order under 49 U.S.C. 30118(b), but enforcement of the order is restrained or the order is set aside in a civil action to which 49 U.S.C. 30121(d) applies.

(c) *Contents of report; requirement of signature.* (1) A report submitted pursuant to paragraph (a) of this section must contain the following information, where that information is available to the person selling or leasing the defective or noncompliant tire:

(i) A statement that the report is being submitted pursuant to 49 CFR 573.10(a) (sale or lease of defective or noncompliant tires);

(ii) The name, address and phone number of the person who purchased or leased the tire;

(iii) The name of the manufacturer of the tire;

(iv) The tire's brand name, model name, and size;

(v) The tire's DOT identification number;

(vi) The date of the sale or lease; and

(vii) The name, address, and telephone number of the seller or lessor.

(2) Each report must be dated and signed, with the name of the person signing the report legibly printed or typed below the signature.

(d) Reports required to be submitted pursuant to this section must be submitted no more than that five working days after a person to whom a tire covered by this section has been sold or leased has taken possession of that tire. Submissions must be made by any

means which permits the sender to verify promptly that the report was in fact received by NHTSA and the day it was received by NHTSA.

[65 FR 81413, Dec. 26, 2000, as amended at 72 FR 32016, June 11, 2007]

§ 573.11 Prohibition on sale or lease of new defective and noncompliant motor vehicles and items of replacement equipment.

(a) If notification is required by an order under 49 U.S.C. 30118(b) or is required under 49 U.S.C. 30118(c) and the manufacturer has provided to a dealer (including retailers of motor vehicle equipment) notification about a new motor vehicle or new item of replacement equipment in the dealer's possession, including actual and constructive possession, at the time of notification that contains a defect related to motor vehicle safety or does not comply with an applicable motor vehicle safety standard issued under 49 CFR part 571, the dealer may sell or lease the motor vehicle or item of replacement equipment only if:

(1) The defect or noncompliance is remedied as required by 49 U.S.C. 30120 before delivery under the sale or lease; or

(2) When the notification is required by an order under 49 U.S.C. 30118(b), enforcement of the order is restrained or the order is set aside in a civil action to which 49 U.S.C. 30121(d) applies.

(b) Paragraph (a) of this section does not prohibit a dealer from offering the vehicle or equipment for sale or lease, provided that the dealer does not sell or lease it.

[67 FR 19697, Apr. 23, 2002]

§ 573.12 Prohibition on sale or lease of new and used defective and noncompliant motor vehicle equipment.

(a) Subject to § 573.12(b), no person may sell or lease any new or used item of motor vehicle equipment (including a tire) as defined by 49 U.S.C. 30102(a)(7), for installation on a motor vehicle, that is the subject of a decision under 49 U.S.C. 30118(b) or a notice required under 49 U.S.C. 30118(c), in a condition that it may be reasonably used for its original purpose.

(b) Paragraph (a) of this section is not applicable where:

(1) The defect or noncompliance is remedied as required under 49 U.S.C. 30120 before delivery under the sale or lease;

(2) Notification of the defect or noncompliance is required by an order under 49 U.S.C. 30118(b), but enforcement of the order is restrained or the order is set aside in a civil action to which 49 U.S.C. 30121(d) applies.

[67 FR 19698, Apr. 23, 2002]

§ 573.13 Reimbursement for pre-notification remedies.

(a) Pursuant to 49 U.S.C. 30120(d) and § 573.6(c)(8)(i) of this part, this section specifies requirements for a manufacturer's plan (including general reimbursement plans submitted pursuant to § 573.6(c)(8)(i)) to reimburse owners and purchasers for costs incurred for remedies in advance of the manufacturer's notification of safety-related defects and noncompliance with Federal motor vehicle safety standards under subsection (b) or (c) of 49 U.S.C. 30118.

(b) Definitions. The following definitions apply to this section:

(1) *Booster seat* means either a backless child restraint system or a belt-positioning seat.

(2) *Claimant means* a person who seeks reimbursement for the costs of a pre-notification remedy for which he or she paid.

(3) *Pre-notification remedy* means a remedy that is performed on a motor vehicle or item of replacement equipment for a problem subsequently addressed by a notification under subsection (b) or (c) of 49 U.S.C. 30118 and that is obtained during the period for reimbursement specified in paragraph (c) of this section.

(4) *Other child restraint system* means all child restraint systems as defined in 49 CFR 571.213 S4 not included within the categories of rear-facing infant seat or booster seat.

(5) *Rear-facing infant seat* means a child restraint system that is designed to position a child to face only in the direction opposite to the normal direction of travel of the motor vehicle.

(6) *Warranty* means a warranty as defined in § 579.4(c) of this chapter.

(c) The manufacturer's plan shall specify a period for reimbursement, as follows:

(1) The beginning date shall be no later than a date based on the underlying basis for the recall determined as follows:

(i) For a noncompliance with a Federal motor vehicle safety standard, the date shall be the date of the first test or observation by either NHTSA or the manufacturer indicating that a noncompliance may exist.

(ii) For a safety-related defect that is determined to exist following the opening of an Engineering Analysis (EA) by NHTSA's Office of Defects Investigation (ODI), the date shall be the date the EA was opened, or one year before the date of the manufacturer's notification to NHTSA pursuant to § 573.6 of this part, whichever is earlier.

(iii) For a safety-related defect that is determined to exist in the absence of the opening of an EA, the date shall be one year before the date of the manufacturer's notification to NHTSA pursuant to § 573.6 of this part.

(2) The ending date shall be no earlier than:

(i) For motor vehicles, 10 calendar days after the date on which the manufacturer mailed the last of its notifications to owners pursuant to part 577 of this chapter.

(ii) For replacement equipment, 10 calendar days after the date on which the manufacturer mailed the last of its notifications to owners pursuant to part 577 of this chapter (where applicable) or 30 days after the conclusion of the manufacturer's initial efforts to provide public notice of the existence of the defect or noncompliance pursuant to § 577.7, whichever is later.

(d) The manufacturer's plan shall provide for reimbursement of costs for pre-notification remedies, subject to the conditions established in the plan. The following conditions and no others may be established in the plan.

(1) The plan may exclude reimbursement for costs incurred within the period during which the manufacturer's original or extended warranty would have provided for a free repair of the problem addressed by the recall, without any payment by the consumer unless a franchised dealer or authorized representative of the manufacturer denied warranty coverage or the repair made under warranty did not remedy the problem addressed by the recall. The exclusion based on an extended warranty may be applied only when the manufacturer provided written notice of the terms of the extended warranty to owners.

(2)(i) For a motor vehicle, the plan may exclude reimbursement:

(A) If the pre-notification remedy was not of the same type (repair, replacement, or refund of purchase price) as the recall remedy;

(B) If the pre-notification remedy did not address the defect or noncompliance that led to the recall or a manifestation of the defect or noncompliance; or

(C) If the pre-notification remedy was not reasonably necessary to correct the defect or noncompliance that led to the recall or a manifestation of the defect or noncompliance.

(ii) However, the plan may not require that the pre-notification remedy be identical to the remedy elected by the manufacturer pursuant to 49 U.S.C. 30120(a)(1)(A).

(3)(i) For replacement equipment, the plan may exclude reimbursement:

(A) If the pre-notification remedy did not address the defect or noncompliance that led to the recall or a manifestation of the defect or noncompliance;

(B) If the pre-notification remedy was not reasonably necessary to correct the defect or noncompliance that led to the recall or a manifestation of the defect and noncompliance; or

(C) In the case of a child restraint system that was replaced, if the replacement child restraint is not the same type (*i.e.*, rear-facing infant seat, booster seat, or other child restraint system) as the restraint that was the subject of the recall.

(ii) However, the plan may not require that the pre-notification remedy be identical to the remedy elected by the manufacturer pursuant to 49 U.S.C. 30120(a)(1)(B).

(4) The plan may exclude reimbursement if the claimant did not submit adequate documentation to the manufacturer at an address or location designated pursuant to § 573.13(f). The plan may require, at most, that the following documentation be submitted:

(i) Name and mailing address of the claimant;

(ii) Identification of the product that was recalled:

(A) For motor vehicles, the vehicle make, model, model year, and vehicle identification number of the vehicle;

(B) For replacement equipment other than child restraint systems and tires, a description of the equipment, including model and size as appropriate;

(C) For child restraint systems, a description of the restraint, including the type (rear-facing infant seat, booster seat, or other child restraint system) and the model; or

(D) For tires, the model and size;

(iii) Identification of the recall (either the NHTSA recall number or the manufacturer's recall number);

(iv) Identification of the owner or purchaser of the recalled motor vehicle or replacement equipment at the time that the pre-notification remedy was obtained;

(v) A receipt for the pre-notification remedy, which may be an original or copy:

(A) If the reimbursement sought is for a repair, the manufacturer may require that the receipt indicate that the repair addressed the defect or noncompliance that led to the recall or a manifestation of the defect or noncompliance, and state the total amount paid for the repair of that problem. Itemization of a receipt of the amount for parts, labor, other costs and taxes, may not be required unless it is unclear on the face of the receipt that the repair for which reimbursement is sought addressed only the pre-notification remedy relating to the pertinent defect or noncompliance or manifestation thereof.

(B) If the reimbursement sought is for the replacement of a vehicle part or an item of replacement equipment, the manufacturer may require that the receipt identify the item and state the total amount paid for the item that replaced the defective or noncompliant item;

(vi) In the case of items of replacement equipment that were replaced, documentation that the claimant or a relative thereof (with relationship stated) owned the recalled item. Such documentation could consist of:

(A) An invoice or receipt showing purchase of the recalled item of replacement equipment;

(B) If the claimant sent a registration card for a recalled child restraint system or tire to the manufacturer, a statement to that effect;

(C) A copy of the registration card for the recalled child restraint system or tire; or

(D) Documentation demonstrating that the claimant had replaced a recalled tire that was on a vehicle that he, she, or a relative owned; and

(vii) If the pre-notification remedy was obtained at a time when the vehicle or equipment could have been repaired or replaced at no charge under a manufacturer's original or extended warranty program, documentation indicating that the manufacturer's dealer or authorized facility either refused to remedy the problem addressed by the recall under the warranty or that the warranty repair did not correct the problem addressed by the recall.

(e) The manufacturer's plan shall specify the amount of costs to be reimbursed for a pre-notification remedy.

(1) For motor vehicles:

(i) The amount of reimbursement shall not be less than the lesser of:

(A) The amount paid by the owner for the remedy, or

(B) The cost of parts for the remedy, plus associated labor at local labor rates, miscellaneous fees such as disposal of waste, and taxes. Costs for parts may be limited to the manufacturer's list retail price for authorized parts.

(ii) Any associated costs, including, but not limited to, taxes or disposal of wastes, may not be limited.

(2) For replacement equipment:

(i) The amount of reimbursement ordinarily would be the amount paid by the owner for the replacement item.

(ii) In cases in which the owner purchased a brand or model different from the item of motor vehicle equipment that was the subject of the recall, the manufacturer may limit the amount of reimbursement to the retail list price of the defective or noncompliant item that was replaced, plus taxes.

(iii) If the item of motor vehicle equipment was repaired, the provisions

of paragraph (e)(1) of this section apply.

(f) The manufacturer's plan shall identify an address to which claimants may mail reimbursement clams and may identify franchised dealer(s) and authorized facilities to which claims for reimbursement may be submitted directly.

(g) The manufacturer (either directly or through its designated dealer or facility) shall act upon requests for reimbursement as follows:

(1) The manufacturer shall act upon a claim for reimbursement within 60 days of its receipt. If the manufacturer denies the claim, the manufacturer must send a notice to the claimant within 60 days of receipt of the claim that includes a clear, concise statement of the reasons for the denial.

(2) If a claim for reimbursement is incomplete when originally submitted, the manufacturer shall advise the claimant within 60 days of receipt of the claim of the documentation that is needed and offer an opportunity to resubmit the claim with complete documentation.

(h) Reimbursement shall be in the form of a check or cash from the manufacturer or a designated dealer or facility.

(i) The manufacturer shall make its reimbursement plan available to the public upon request.

(j) Any disputes over the denial in whole or in part of a claim for reimbursement shall be resolved between the claimant and the manufacturer. NHTSA will not mediate or resolve any disputes regarding eligibility for, or the amount of, reimbursement.

(k) Each manufacturer shall implement each plan for reimbursement in accordance with this section and the terms of the plan.

(l) Nothing in this section requires that a manufacturer provide reimbursement in connection with a fraudulent claim for reimbursement.

(m) A manufacturer's plan may provide that it will not apply to recalls based solely on noncompliant or defective labels.

(n) The requirement that reimbursement for a pre-notification remedy be provided to an owner does not apply if, in the case of a motor vehicle or replacement equipment other than a tire, it was bought by the first purchaser more than 10 calendar years before notice is given under 49 U.S.C. 30118(c) or an order is issued under section 49 U.S.C. 30118(b). In the case of a tire, this period shall be 5 calendar years.

[67 FR 64063, Oct. 17, 2002]

§ 573.14 Accelerated remedy program.

(a) An accelerated remedy program is one in which the manufacturer expands the sources of replacement parts needed to remedy the defect or noncompliance, or expands the number of authorized repair facilities beyond those facilities that usually and customarily provide remedy work for the manufacturer, or both.

(b) The Administrator may require a manufacturer to accelerate its remedy program if:

(1) The Administrator finds that there is a risk of serious injury or death if the remedy program is not accelerated;

(2) The Administrator finds that acceleration of the remedy program can be reasonably achieved by expanding the sources of replacement parts, expanding the number of authorized repair facilities, or both; and

(3) The Administrator determines that the manufacturer's remedy program is not likely to be capable of completion within a reasonable time.

(c) The Administrator, in deciding whether to require the manufacturer to accelerate a remedy program and what to require the manufacturer to do, will consult with the manufacturer and may consider a wide range of information, including, but not limited to, the following: the manufacturer's initial or revised report submitted under § 573.6(c), information from the manufacturer, information from other manufacturers and suppliers, information from any source related to the availability and implementation of the remedy, and the seriousness of the risk of injury or death associated with the defect or noncompliance.

(d) As required by the Administrator, an accelerated remedy program shall include the manner of acceleration (expansion of the sources of replacement parts, expansion of the number of authorized repair facilities, or both), may

require submission of a plan, may identify the parts to be provided and/or the sources of those parts, may require the manufacturer to notify the agency and owners about any differences among different sources or brands of parts, may require the manufacturer to identify additional authorized repair facilities, and may specify additional owner notifications related to the program. The Administrator may also require the manufacturer to include a program to provide reimbursement to owners who incur costs to obtain the accelerated remedy.

(e) Under an accelerated remedy program, the remedy that is provided shall be equivalent to the remedy that would have been provided if the manufacturer's remedy program had not been accelerated. The replacement parts used to remedy the defect or noncompliance shall be reasonably equivalent to those that would have been used if the remedy program were not accelerated. The service procedures shall be reasonably equivalent. In the case of tires, all replacement tires shall be the same size and type as the defective or noncompliant tire, shall be suitable for use on the owner's vehicle, shall have the same or higher load index and speed rating, and, for passenger car tires, shall have the same or better rating in each of the three categories enumerated in the Uniform Tire Quality Grading System. *See* 49 CFR 575.104. In the case of child restraints systems, all replacements shall be of the same type (*e.g.*, rear-facing infant seats with a base, rear-facing infant seats without a base, convertible seats (designed for use in both rear- and forward-facing modes), forward-facing only seats, high back booster seats with a five-point harness, and belt positioning booster seats) and the same overall quality.

(f) In those instances where the accelerated remedy program provides that an owner may obtain the remedy from a source other than the manufacturer or its dealers or authorized facilities by paying for the remedy and/or its installation, the manufacturer shall reimburse the owner for the cost of obtaining the remedy as specified on paragraphs (f)(1) through (f)(3) of this section. Under these circumstances, the accelerated remedy program shall include, to the extent required by the Administrator:

(1) A description of the remedy and costs that are eligible for reimbursement, including identification of the equipment and/or parts and labor for which reimbursement is available;

(2) Identification, with specificity or as a class, of the alternative repair facilities at which reimbursable repairs may be performed, including an explanation of how to arrange for service at those facilities; and

(3) Other provisions assuring appropriate reimbursement that are consistent with those set forth in §573.13, including, but not limited to, provisions regarding the procedures and needed documentation for making a claim for reimbursement, the amount of costs to be reimbursed, the office to which claims for reimbursement shall be submitted, the requirements on manufacturers for acting on claims for reimbursement, and the methods by which owners can obtain information about the program.

(g) In response to a manufacturer's request, the Administrator may authorize a manufacturer to terminate its accelerated remedy program if the Administrator concludes that the manufacturer can meet all future demands for the remedy through its own sources in a prompt manner. If required by the Administrator, the manufacturer shall provide notice of the termination of the program to all owners of unremedied vehicles and equipment at least 30 days in advance of the termination date, in a form approved by the Administrator.

(h) Each manufacturer shall implement any accelerated remedy program required by the Administrator according to the terms of that program.

[67 FR 72392, Dec. 5, 2002]

PART 574—TIRE IDENTIFICATION AND RECORDKEEPING

Sec.

574.1 Scope.
574.2 Purpose.
574.3 Definitions.
574.4 Applicability.
574.5 Tire identification requirements.
574.6 Identification mark.

574.7 Information requirements—new tire manufacturers, new tire brand name owners.
574.8 Information requirements—tire distributors and dealers.
574.9 Requirements for motor vehicle dealers.
574.10 Requirements for motor vehicle manufacturers.

AUTHORITY: 49 U.S.C. 322, 30111, 30115, 30117, and 30166; delegation of authority at 49 CFR 1.50.

EDITORIAL NOTE: An interpretation of manufacturer's designee issued by NHTSA and published at 36 FR 9780, May 28, 1971, provides as follows:

''A request for an interpretation has been received from the Rubber Manufacturers Association asking that it be made clear that, under the Tire Identification and Recordkeeping Regulation (part 574), particularly §§ 574.7 and 574.8, only the tire manufacturer, brand name owner, or retreader may designate a third party to provide the necessary recording forms or to maintain the records required by the regulation.

''Another person has requested an interpretation concerning the questions whether: (1) A tire manufacturer, brand name owner or retreader may designate one or more persons to be its designee for the purpose of maintaining the information, (2) an independent distributor or dealer may select a designee for the retention of the manufacturer's records, provided the manufacturer approves the designation, and (3) the independent distributor or dealer may seek administrative relief in the event he believes the information retained by the manufacturer is being used to his detriment.

''Under section 113(f) of the National Traffic and Motor Vehicle Safety Act (15 U.S.C. 1402(f) and part 574, it is the tire manufacturer who has the ultimate responsibility for maintaining the records of first purchasers. Therefore, it is the tire manufacturer or his designee who must maintain these records. The term *designee*, as used in the regulation, was not intended to preclude multiple designees; if the tire manufacturer desires, he may designate more than one person to maintain the required information. Furthermore, neither the Act nor the regulation prohibits the distributor or dealer from being the manufacturer's designee nor do they prohibit a distributor or dealer from selecting someone to be the manufacturer's designee provided the manufacturer approves of the selection.

''With respect to the possibility of manufacturers using the maintained information to the detriment of a distributor or dealer, the NHTSA will of course investigate claims by distributors or dealers of alleged misconduct and, if the maintained information is being misused, take appropriate action.

''Issued under the authority of sections 103, 113, and 119 of the National Traffic and Motor Vehicle Safety Act, 15 U.S.C. 1392, 1402, and 1407, and the delegation of authority at 49 CFR 1.51.''

§ 574.1 Scope.

This part sets forth the method by which new tire manufacturers and new tire brand name owners shall identify tires for use on motor vehicles and maintain records of tire purchasers, and the methods by which retreaders and retreaded tire brand name owners shall identify tires for use on motor vehicles. This part also sets forth the methods by which independent tire dealers and distributors shall record, on registration forms, their names and addresses and the identification number of the tires sold to tire purchasers and provide the forms to the purchasers, so that the purchasers may report their names to the new tire manufacturers and new tire brand name owners, and by which other tire dealers and distributors shall record and report the names of tire purchasers to the new tire manufacturers and new tire brand name owners.

(Authority: Secs. 108, 119, and 201, Pub. L. 89–563, 80 Stat. 718 (15 U.S.C. 1392, 1407, and 1421); sec. 4, Pub. L. 97–311, 96 Stat. 1619 (15 U.S.C. 1418); and delegation of authority at 49 CFR 1.50)

[49 FR 4760, Feb. 8, 1984]

§ 574.2 Purpose.

The purpose of this part is to facilitate notification to purchasers of defective or nonconforming tires, pursuant to Sections 30118 and 30119 of Title 49, United States Code, so that they may take appropriate action in the interest of motor vehicle safety.

[61 FR 29495, June 11, 1996]

§ 574.3 Definitions.

(a) *Statutory definitions*. All terms in this part that are defined in Section 30102 of Title 49, United States Code, are used as defined therein.

(b) *Motor vehicle safety standard definitions*. Unless otherwise indicated, all terms used in this part that are defined in the Motor Vehicle Safety Standards, part 571 of this subchapter (hereinafter

the Standards), are used as defined therein.

(c)(1) *Independent* means, with respect to a tire distributor or dealer, one whose business is not owned or controlled by a tire manufacturer or brand name owner.

(2) *Mileage contract purchaser* means a person who purchases or leases tire use on a mileage basis.

(3) *New tire brand name owner* means a person, other than a new tire manufacturer, who owns or has the right to control the brand name of a new tire or a person who licenses another to purchase new tires from a new tire manufacturer bearing the licensor's brand name.

(4) *Retreaded tire brand name owner* means a person, other than a retreader, who owns or has the right to control the brand name of a retreaded tire or a person who licenses another to purchase retreaded tires from a retreader bearing the licensor's brand name.

(5) *Tire purchaser* means a person who buys or leases a new tire, or who buys or leases for 60 days or more a motor vehicle containing a new tire for purposes other than resale.

(Authority: Secs. 103, 108, 112, 119, 201, Pub. L. 89–563, 80 Stat. 718 (15 U.S.C. 1392, 1397, 1401, 1407, 1421); secs. 102, 103, 104, Pub. L. 93–492, 88 Stat. 1470 (15 U.S.C. 1411–1420); 92 Stat. 2689 (15 U.S.C. 1418); delegation of authority at 49 CFR 1.51)

[36 FR 1197, Jan. 26, 1971, as amended at 44 FR 7964, Feb. 8, 1979; 49 FR 38612, Oct. 1, 1984; 61 FR 29495, June 11, 1996]

§574.4 Applicability.

This part applies to manufacturers, brand name owners, retreaders, distributors, and dealers of new and retreaded tires, and new non-pneumatic tires and non-pneumatic tire assemblies for use on motor vehicles manufactured after 1948 and to manufacturers and dealers of motor vehicles manufactured after 1948. However, it does not apply to persons who retread tires solely for their own use.

[36 FR 5422, Mar. 23, 1971, as amended at 55 FR 29596, July 20, 1990]

§574.5 Tire identification requirements.

Each tire manufacturer shall conspicuously label on one sidewall of each tire it manufactures, except tires manufactured exclusively for mileage-contract purchasers, or non-pneumatic tires or non-pneumatic tire assemblies, by permanently molding into or onto the sidewall, in the manner and location specified in Figure 1, a tire identification number containing the information set forth in paragraphs (a) through (d) of this section. However, at the option of the manufacturer, the information contained in paragraph (d) of this section may, instead of being permanently molded, be laser etched into or onto the sidewall in the location specified in Figure 1, during the manufacturing process of the tire and not later than 24 hours after the tire is removed from the mold. Each tire retreader, except tire retreaders who retread tires solely for their own use, shall conspicuously label one sidewall of each tire it retreads by permanently molding or branding into or onto the sidewall, in the manner and location specified in Figure 2, a tire identification number containing the information set forth in paragraphs (a) through (d) of this section. However, at the option of the retreader, the information set forth in paragraph (d) of this section may, instead of being permanently molded or branded, be laser etched into or onto the sidewall in the location specified in Figure 2, during the retreading of the tire and not later than 24 hours after the application of the new tread. In addition, the DOT symbol required by Federal Motor Vehicle Safety Standards shall be located as shown in Figures 1 and 2. The DOT symbol shall not appear on tires to which no Federal Motor Vehicle Safety Standard is applicable, except that the DOT symbol on tires for use on motor vehicles other than passenger cars may, prior to retreading, be removed from the sidewall or allowed to remain on the sidewall, at the retreader's option. The symbols to be used in the tire identification number for tire manufacturers and retreaders are: ''A, B, C, D, E, F, H, J, K, L, M, N, P, R, T, U, V, W, X, Y, 1, 2, 3, 4, 5, 6, 7, 8, 9, 0''. Tires manufactured or retreaded exclusively for mileage-contract purchasers are not required to contain a tire identification number if the tire contains the phrase ''for mileage contract use only''

permanently molded into or onto the tire sidewall in lettering at least one-quarter inch high. Each manufacturer of a non-pneumatic tire or a non-pneumatic tire assembly shall permanently mold, stamp or otherwise permanently mark into or onto one side of the non-pneumatic tire or non-pneumatic tire assembly a tire identification number containing the information set forth in paragraphs (a) through (d) of this section. In addition, the DOT symbol required by the Federal motor vehicle safety standards shall be positioned relative to the tire identification number as shown in Figure 1, and the symbols to be used for the other information are those listed above. The labeling for a non-pneumatic tire or a non-pneumatic tire assembly shall be in the manner specified in Figure 1 and positioned on the non-pneumatic tire or non-pneumatic tire assembly such that it is not placed on the tread or the outermost edge of the tire and is not obstructed by any portion of the non-pneumatic rim or wheel center member designated for use with that non-pneumatic tire in S4.4 of Standard No. 129 (49 CFR 571.129).

(a) *First grouping*. The first group, of two or three symbols, depending on whether the tire is new or retreaded, shall represent the manufacturer's assigned identification mark (see § 574.6).

(b) *Second grouping*. For new tires, the second group, of no more than two symbols, shall be used to identify the tire size. For a new non-pneumatic tire or a non-pneumatic tire assembly, the second group, of not more than two symbols, shall be used to identify the non-pneumatic tire identification code. For retreaded tires, the second group, of no more than two symbols, shall identify the retread matrix in which the tire was processed or a tire size code if a matrix was not used to process the retreaded tire. Each new-tire manufacturer and retreader shall maintain a record of each symbol used, with the corresponding matrix or tire size and shall provide such record to the NHTSA upon written request.

(c) *Third grouping*. The third group, consisting of no more than four symbols, may be used at the option of the manufacturer or retreader as a descriptive code for the purpose of identifying significant characteristics of the tire. However, if the tire is manufactured for a brand name owner, one of the functions of the third grouping shall be to identify the brand name owner. Each manufacturer or retreader who uses the third grouping shall maintain a detailed record of any descriptive or brand name owner code used, which shall be provided to the Bureau upon written request.

(d) *Fourth grouping*. The fourth grouping, consisting of four numerical symbols, must identify the week and year of manufacture. The first two symbols must identify the week of the year by using ''01'' for the first full calendar week in each year, ''02'' for the second full calendar week, and so on. The calendar week runs from Sunday through the following Saturday. The final week of each year may include not more than 6 days of the following year. The third and fourth symbols must identify the year. Example: 0101 means the 1st week of 2001, or the week beginning Sunday, January 7, 2001, and ending Saturday, January 13, 2001. The symbols signifying the date of manufacture shall immediately follow the optional descriptive code (paragraph (c) of this section). If no optional descriptive code is used, the symbols signifying the date of manufacture must be placed in the area shown in Figures 1 and 2 of this section for the optional descriptive code.

(e) *Tire identification number height*. Notwithstanding Figures 1 and 2, each character in the tire identification number on tires with less than 6 inches in cross section width or tires with less than 13 inches bead diameter may be any size of 5/32 inches (4 mm) or greater.

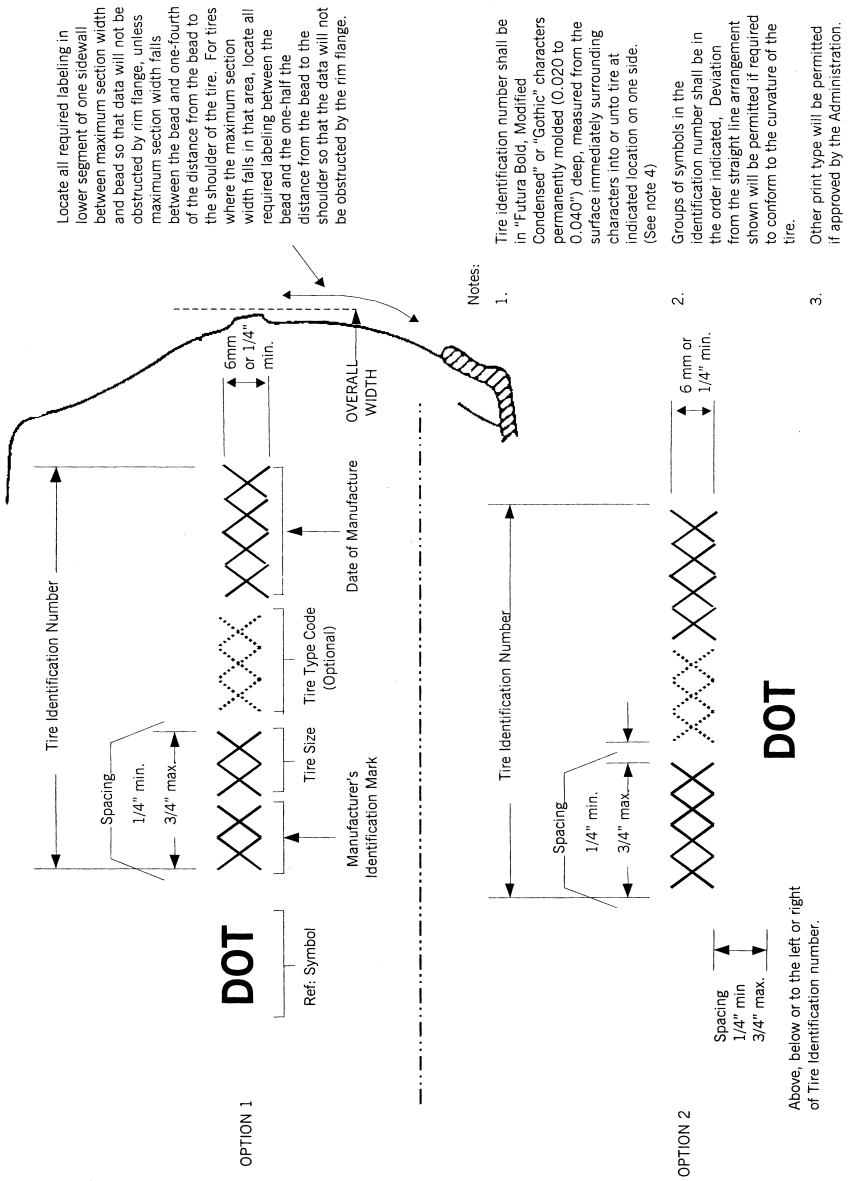

FIGURE 1: IDENTIFICATION NUMBER FOR NEW TIRES

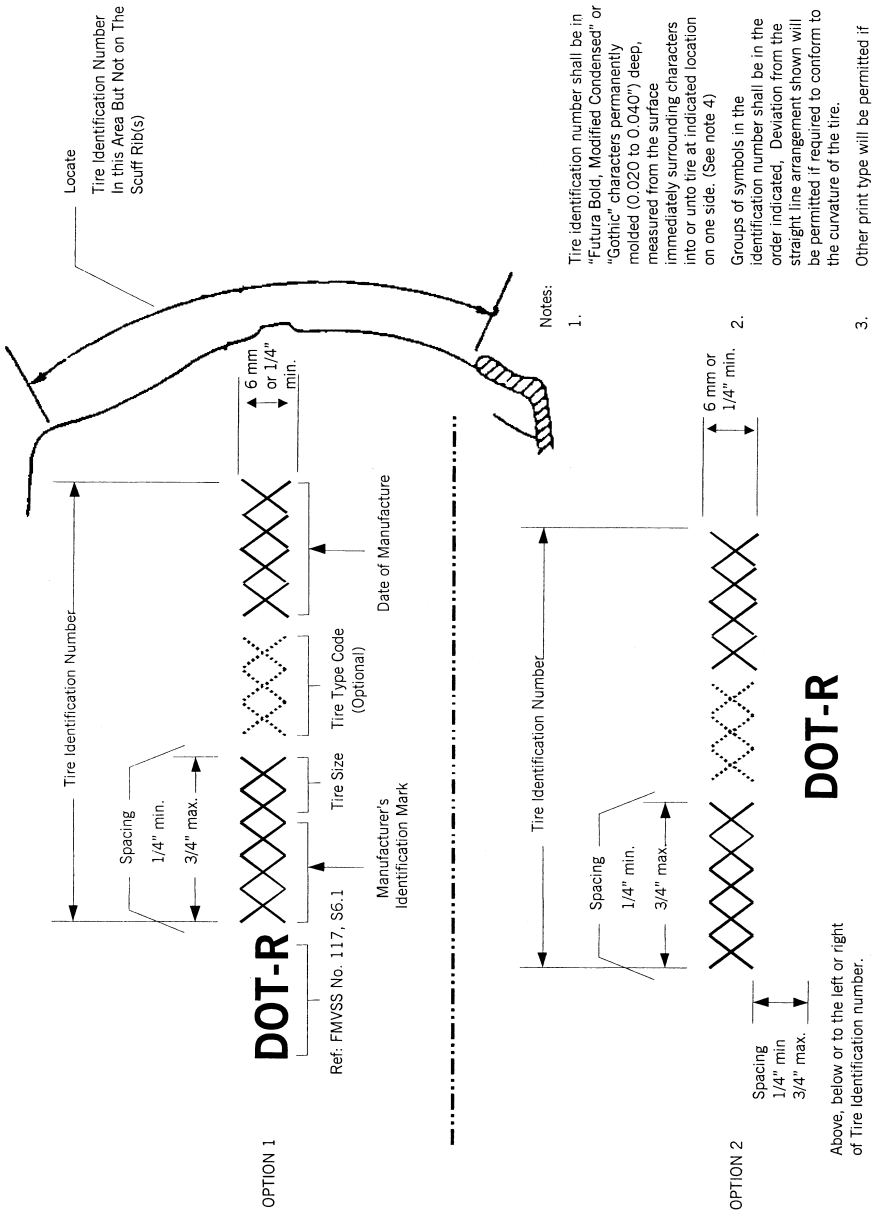

Notes:

1. Tire identification number shall be in "Futura Bold, Modified Condensed" or "Gothic" characters permanently molded (0.020 to 0.040") deep, measured from the surface immediately surrounding characters into or unto tire at indicated location on one side. (See note 4)
2. Groups of symbols in the identification number shall be in the order indicated, Deviation from the straight line arrangement shown will be permitted if required to conform to the curvature of the tire.
3. Other print type will be permitted if approved by the Administration.

FIGURE 2. IDENTIFICATION NUMBER FOR RETREADED TIRES

[36 FR 1197, Jan. 26, 1971, as amended at 36 FR 9870, May 23, 1971; 37 FR 23727, Nov. 8, 1972; 37 FR 25521, Dec. 1, 1972; 39 FR 5192, Feb. 11, 1974; 39 FR 12105, Apr. 3, 1974; 50 FR 2288, Jan. 16, 1985; 55 FR 29596, July 20, 1990; 64 FR 36812, July 8, 1999; 67 FR 69628, Nov. 18, 2002; 69 FR 31320, June 3, 2004; 69 FR 51400, Aug. 19, 2004; 69 FR 64501, Nov. 5, 2004]

§574.6 Identification mark.

To obtain the identification mark required by 574.5(a), each manufacturer of new or retreaded pneumatic tires, non-pneumatic tires or non-pneumatic tire assemblies shall apply in writing to the Office of Vehicle Safety Compliance, National Highway Traffic Safety Administration, 400 Seventh Street SW., Washington, DC 20590, identify itself as a tire manufacturer or retreader and furnish the following information:

(a) The name, or other designation identifying the applicant, and its main office address.

(b) The name, or other identifying designation, of each individual plant operated by the manufacturer and the address of each plant, if applicable.

(c) The type of tires manufactured at each plant, e.g., pneumatic tires for passenger cars, buses, trucks or motorcycles; pneumatic retreaded tires; or non-pneumatic tires or non-pneumatic tire assemblies.

[55 FR 29596, July 20, 1990, as amended at 61 FR 29495, June 11, 1996]

§574.7 Information requirements—new tire manufacturers, new tire brand name owners.

(a)(1) Each new tire manufacturer and each new tire brand name owner (hereinafter referred to in this section and §574.8 as ''tire manufacturer'') or its designee, shall provide tire registration forms to every distributor and dealer of its tires which offers new tires for sale or lease to tire purchasers.

(2) Each tire registration form provided to independent distributors and dealers pursuant to paragraph (a)(1) of this section shall contain space for recording the information specified in paragraphs (a)(4)(i) through (a)(4)(iii) of this section. Each form shall:

(i) Have the following physical characteristics:

(A) Be rectangular;

(B) Be not less than 3½ inches high, 5 inches long, and 0.007 inches thick;

(C) Be not more than 4¼ inches high, 6 inches long, and 0.016 inch thick.

(ii) On the address side of the form, be addressed with the name and address of the manufacturer or its designee, and include, in the upper right hand corner, the statement ''Affix a postcard stamp.''

(iii) On the other side of the form:

(A) Include the tire manufacturer's name, unless it appears on the address side of the form;

(B) Include a statement explaining the purpose of the form and how a consumer may register tires. The statement shall:

(*1*) Include the heading ''IMPORTANT''.

(*2*) Include the sentence: ''In case of a recall, we can reach you only if we have your name and address.''

(*3*) Indicate that sending in the card will add a person to the manufacturer's recall list.

(*4*) A tire manufacturer may voluntarily provide means for tire registration via the Internet, by telephone or other electronic means. If a tire manufacturer voluntarily provides a Web site or other means by which its tires can be registered, it may (but is not required to) include a sentence listing one or more such means, beginning with the phrase ''Instead of mailing this form, you can * * *.'' Example: Instead of mailing this form, you can register online at [insert tire manufacturer's registration Web site address].

(*5*) Include the sentence: ''Do it today.''

(C) Include space for recording tire identification numbers for six tires.

(D) Use shading to distinguish between areas of the form to be filled in by sellers and customers.

(*1*) Include the statement: ''Shaded areas must be filled in by seller.''

(*2*) The areas of the form for recording tire identification numbers and information about the seller of the tires must be shaded.

(*3*) The area of the form for recording the customer name and address must not be shaded.

(E) Include, in the top right corner, the phrase ''OMB Control No. 2127–0050''.

(3) Each tire registration form provided to distributors and dealers that are not independent distributors or dealers pursuant to paragraph (a)(1) of this section must contain space for recording the information specified in paragraphs (a)(4)(i) through (a)(4)(iii) of this section. Each form must include:

(A) A statement indicating where the form should be returned, including the name and mailing address of the manufacturer or its designee.

(B) The tire manufacturers' logo or other identification, if the manufacturer is not identified as part of the statement indicating where the form should be returned.

(C) The statement: ''IMPORTANT: FEDERAL LAW REQUIRES TIRE IDENTIFICATION NUMBERS MUST BE REGISTERED''.

(D) In the top right corner, the phrase ''OMB Control No. 2127–0050''.

(4)(i) Name and address of the tire purchaser.

(ii) Tire identification number.

(iii) Name and address of the tire seller or other means by which the tire manufacturer can identify the tire seller.

(b) Each tire manufacturer shall record and maintain, or have recorded and maintained for it by a designee, the information from registration forms which are submitted to it or its designee. No tire manufacturer shall use the information on the registration forms for any commercial purpose detrimental to tire distributors and dealers. Any tire manufacturer to which registration forms are mistakenly sent shall forward those registration forms to the proper tire manufacturer within 90 days of the receipt of the forms.

(c) Each tire manufacturer shall maintain, or have maintained for it by a designee, a record of each tire distributor and dealer that purchases tires directly from the manufacturer and sells them to tire purchasers, the number of tires purchased by each such distributor or dealer, the number of tires for which reports have been received from each such distributor or dealer other than an independent distributor or dealer, the number of tires for which reports have been received from each such independent distributor or dealer, the total number of tires for which registration forms have been submitted to the manufacturer or its designee, and the total number of tires sold by the manufacturer.

(d) The information that is specified in paragraph (a)(4) of this section and recorded on registration forms submitted to a tire manufacturer or its designee shall be maintained for a period of not less than five years from the date on which the information is recorded by the manufacturer or its designee.

(e) Tire manufacturers may voluntarily provide means for tire registration via the Internet, by telephone or other electronic means.

(f) Each tire manufacturer shall meet the requirements of paragraphs (b), (c) and (d) of this section with respect to tire registration information submitted to it or its designee by any means authorized by the manufacturer in addition to the use of registration forms.

(Authority: Secs. 108, 119, and 201, Pub. L. 89–563, 80 Stat. 718 (15 U.S.C. 1392, 1407, and 1421); sec. 4, Pub. L. 97–311, 96 Stat. 1619 (15 U.S.C. 1418); and delegation of authority at 49 CFR 1.50)

[49 FR 4760, Feb. 8, 1984; 49 FR 5621, Feb. 14, 1984, as amended at 56 FR 49427, Sept. 30, 1991; 64 FR 36815, July 8, 1999; 67 FR 45872, July 10, 2002; 71 FR 39233, July 12, 2006; 73 FR 72368, Nov. 28, 2008]

§ 574.8 Information requirements—tire distributors and dealers.

(a) *Independent distributors and dealers.*

(1) Each independent distributor and each independent dealer selling or leasing new tires to tire purchasers or lessors (hereinafter referred to in this section as ''tire purchasers'') shall comply with paragraph (a)(1)(i), (a)(1)(ii) or (a)(1)(iii) of this section:

(i) At the time of sale or lease of the tire, provide each tire purchaser with a paper tire registration form on which the distributor or dealer has recorded the following information:

(A) The entire tire identification number of the tire(s) sold or leased to the tire purchaser, and

(B) The distributor's or dealer's name and street address. In lieu of the street address, and if one is available, the distributor or dealer's e-mail address or

Web site may be recorded. Other means of identifying the distributor or dealer known to the manufacturer may also be used.

(ii) Record the following information on a paper tire registration form and return it to the tire manufacturer, or its designee, on behalf of the tire purchaser, at no charge to the tire purchaser and within 30 days of the date of sale or lease:

(A) The purchaser's name and address,

(B) The entire tire identification number of the tire(s) sold or leased to the tire purchaser, and

(C) The distributor's or dealer's name and street address. In lieu of the street address, and if one is available, the distributor or dealer's e-mail address or Web site may be recorded. Other means of identifying the distributor or dealer known to the manufacturer may also be used.

(iii) Electronically transmit the following information on the tire registration form by any means listed on the form by the tire manufacturer, or by such other means as may be authorized by the tire manufacturer, to the tire manufacturer or its designee, using secure means (e.g., https on the Web), at no charge to the tire purchaser and within 30 days of the date of sale or lease:

(A) The purchaser's name and address,

(B) The entire tire identification number of the tire(s) sold or leased to the tire purchaser, and

(C) The distributor's or dealer's name and street address. In lieu of the street address, and if one is available, the distributor or dealer's e-mail address or Web site may be recorded. Other means of identifying the distributor or dealer known to the manufacturer may also be used.

(2) Each independent distributor or dealer that complies with paragraph (a)(1)(i) or (ii) of this section shall use either the tire registration forms provided by the tire manufacturers pursuant to § 574.7(a) or registration forms obtained from another source. Paper forms obtained from other sources must comply with the requirements specified in § 574.7(a) for forms provided by tire manufacturers to independent distributors and dealers.

(3) Multiple tire sales or leases by the same tire purchaser may be recorded on a single paper registration form or in a single Web site transaction.

(4) Each independent distributor or dealer that is complying with paragraph (a)(1)(iii) with respect to a sale or lease shall include a statement to that effect on the invoice for that sale or lease and provide the invoice to the tire purchaser.

(b) *Other distributors and dealers.*

(1) Each distributor and each dealer, other than an independent distributor or dealer, selling new tires to tire purchasers:

(i) shall submit, using paper registration forms or, if authorized by the tire manufacturer, secure electronic means, the information specified in § 574.7(a)(4) to the manufacturer of the tires sold, or to the manufacturer's designee.

(ii) shall submit the information specified in § 574.7(a)(4) to the tire manufacturer or the manufacturer's designee, not less often than every 30 days. A distributor or dealer selling fewer than 40 tires of all makes, types and sizes during a 30 day period may wait until a total of 40 new tires is sold. In no event may more than six months elapse before the § 574.7(a)(4) information is forwarded to the respective tire manufacturers or their designees.

(c) Each distributor and each dealer selling new tires to other tire distributors or dealers shall supply to the distributor or dealer a means to record the information specified in § 574.7(a)(4), unless such means has been provided to that distributor or dealer by another person or by a manufacturer.

(d) Each distributor and each dealer shall immediately stop selling any group of tires when so directed by a notification issued pursuant to 49 U.S.C. 30118, *Notification of defects and noncompliance.*

[73 FR 72368, Nov. 28, 2008]

§ 574.9 Requirements for motor vehicle dealers.

(a) Each motor vehicle dealer who sells a used motor vehicle for purposes other than resale, who leases a motor

vehicle for more than 60 days, that is equipped with new tires is considered, for purposes of this part, to be a tire dealer and shall meet the requirements specified in § 574.8.

(b) Each person selling a motor vehicle to first purchasers for purposes other than resale, that is equipped with new tires that were not on the motor vehicle when shipped by the vehicle manufacturer is considered a tire dealer for purposes of this part and shall meet the requirements specified in § 574.8.

(Authority: Secs. 103, 108, 112, 119, 201, Pub. L. 89–563, 80 Stat. 718 (15 U.S.C. 1392, 1397, 1401, 1407, 1421); secs. 102, 103, 104, Pub. L. 93–492, 88 Stat. 1470 (15 U.S.C. 1411–1420); 92 Stat. 2689 (15 U.S.C. 1418); delegation of authority at 49 CFR 1.51)

[44 FR 7964, Feb. 8, 1979]

§ 574.10 Requirements for motor vehicle manufacturers.

Each motor vehicle manufacturer, or his designee, shall maintain a record of the new tires on or in each vehicle shipped by him or a motor vehicle distributor or dealer, and shall maintain a record of the name and address of the first purchaser for purposes other than resale of each vehicle equipped with such tires. These records shall be maintained for a period of not less than 5 years from the date of sale of the vehicle to the first purchaser for purposes other than resale.

(Authority: Secs. 103, 108, 112, 119, 201, Pub. L. 89–563, 80 Stat. 718 (15 U.S.C. 1392, 1397, 1401, 1407, 1421); secs. 102, 103, 104, Pub. L. 93–492, 88 Stat. 1470 (15 U.S.C. 1411–1420); 92 Stat. 2689 (15 U.S.C. 1418); delegation of authority at 49 CFR 1.51)

[44 FR 7964, Feb. 8, 1979, as amended at 67 FR 45872, July 10, 2002]

PART 575—CONSUMER INFORMATION

Subpart A—Regulations Issued Under Section 112(d) of the National Traffic and Motor Vehicle Safety Act; General

Sec.
575.1 Scope.
575.2 Definitions.
575.3 Matter incorporated by reference.
575.4 Application.
575.5 Separability.
575.6 Requirements.
575.7 Special vehicles.

Subpart B—Regulations; Consumer Information Items

575.101–575.102 [Reserved]
575.103 Truck-camper loading.
575.104 Uniform tire quality grading standards.
575.105 Vehicle rollover.
575.106 Tire fuel efficiency consumer information program.

Subpart C—Transportation Recall Enhancement, Accountability, and Documentation Act; Consumer Information

575.201 Child restraint performance.

Subpart D—Safe, Accountable, Flexible, Efficient Transportation Equity Act: A Legacy for Users (SAFETEA–LU); Consumer Information

575.301 Vehicle Labeling of Safety Rating Information.

AUTHORITY: 49 U.S.C. 32302, 32304A, 30111, 30115, 30117, 30123, 30166, and 30168, Pub. L. 104–414, 114 Stat. 1800, Pub. L. 109–59, 119 Stat. 1144, Pub. L. 110–140, 121 Stat. 1492, 15 U.S.C. 1232(g); delegation of authority at 49 CFR 1.50.

Subpart A—Regulations Issued Under Section 112(d) of the National Traffic and Motor Vehicle Safety Act; General

SOURCE: 35 FR 6867, Apr. 30, 1970, unless otherwise noted.

§ 575.1 Scope.

This part contains National Highway Traffic Safety Administration regulations relating to consumer information.

[75 FR 15944, Mar. 30, 2010]

§ 575.2 Definitions.

(a) *Statutory definitions.*—(1) All terms used in this part, subject to paragraph (a)(2) of this section, that are defined in 49 U.S.C. 30102, are used as defined therein.

(2) All terms used in Subpart D of this part that are defined in 15 U.S.C. 1231, are used as defined therein.

(b) *Motor Vehicle Safety Standard definitions.* Unless otherwise indicated, all terms used in this part that are defined in the Motor Vehicle Safety Standards,

part 571 of this subchapter (hereinafter ''the Standards''), are used as defined in the Standards without regard to the applicability of a standard in which a definition is contained.

(c) *Definitions used in this part.*

Owners manual means the document which contains the manufacturers comprehensive vehicle operating and maintenance instructions, and which is intended to remain with the vehicle for the life of the vehicle.

Skid number means the frictional resistance measured in accordance with ASTM E 274 (incorporated by reference, *see* § 575.3) at 40 miles per hour, omitting water delivery as specified in paragraph 7.1 of ASTM E 274 (incorporated by reference, *see* § 575.3).

[35 FR 6867, Apr. 30, 1970, as amended at 38 FR 5339, Feb. 28, 1973; 48 FR 44081, Sept. 27, 1983; 54 FR 48749, Nov. 27, 1989; 64 FR 27924, May 24, 1999; 75 FR 15944, Mar. 30, 2010]

§ 575.3 Matter incorporated by reference.

(a) Certain material is incorporated by reference into this part with the approval of the Director of the Federal Register under 5 U.S.C. 552(a) and 1 CFR part 51. To enforce any edition other than that specified in this section, the National Highway Traffic Safety Administration (NHTSA) must publish notice of change in the FEDERAL REGISTER and the material must be available to the public. All approved material is available for inspection at the NHTSA Technical Information Services Reading Room (*http://www.nhtsa.dot.gov/cars/problems/trd/*), 1200 New Jersey Avenue, SE., Washington, DC 20590 (888–327–4236), and at the National Archives and Records Administration (NARA). For information on the availability of this material at NARA, call 202–741–6030, or go to: *http://www.archives.gov/federal-register/cfr/ibr-locations.html*. All approved material is also available from the sources listed below. If you experience difficulty obtaining the standards referenced below, contact NHTSA's Office of Rulemaking, 1200 New Jersey Avenue, SE., Washington, DC 20590, phone number: (202) 366–0846.

(b) *International Organization for Standardization (ISO)*, 1, ch. de la Voie-Creuse, CP 56, CH–1211 Geneva 20, Switzerland, +41 22 749 01 11, *http://www.iso.org/iso/home.htm*. All ISO materials are also available from the U.S. ISO member, *American National Standards Institute (ANSI)*, 25 West 43rd Street, Fourth Floor, New York, NY 10036–7417, 212–642–4900, *http://www.ansi.org/*.

(1) International Organization for Standardization (ISO), ISO 28580:2009(E) (''ISO 28580''), ''Passenger car, truck and bus tyres—Methods of measuring rolling resistance—Single point test and correlation of measurement results,'' First edition (July 1, 2009), IBR approved for § 575.106.

(2) [Reserved]

(c) *American Society for Testing and Materials (ASTM)*, 100 Barr Harbor Drive, PO Box C700, West Conshohocken, PA 19428–2959, 610–832–9500, *http://www.astm.org/*.

(1) ASTM E 1136–93 (Reapproved 2003) (''ASTM E 1136''), ''Standard Specification for a Radial Standard Reference Test Tire'' (July 1993), IBR approved for § 575.104.

(2) ASTM E 1337–90 (Reapproved 2002) (''ASTM E 1337''), ''Standard Test Method for Determining Longitudinal Peak Braking Coefficient of Paved Surfaces Using a Standard Reference Test Tire'' (April 1990), IBR approved for § 575.106.

(d) The following standards are not available from the original publisher or a standards reseller. As indicated in paragraph (a) of this section, the standards are available for inspection at the NHTSA Technical Information Services Reading Room (*http://www.nhtsa.dot.gov/cars/problems/trd/*), 1200 New Jersey Avenue, SE., Washington, DC 20590 (888–327–4236), and at NARA. For information on the availability of this material at NARA, call 202–741–6030, or go to: *http://www.archives.gov/federal-register/cfr/ibr-locations.html*. If you experience difficulty obtaining the standards referenced below, contact NHTSA's Office of Rulemaking, 1200 New Jersey Avenue, SE., Washington, DC 20590, phone number (202) 366–0846.

(1) ASTM E 274–79 (''ASTM E 274''), ''Standard Test Method for Skid Resistance of Paved Surfaces Using a Full-Scale Tire'' (February 1980), IBR approved for § 575.104.

(2) ASTM F 377–74 (''ASTM F 377''), ''Standard Method for Calibration of Braking Force for Testing of Pneumatic Tires'' (March 1974), IBR approved for § 575.104.

[75 FR 15944, Mar. 30, 2010]

§ 575.4 Application.

(a) *General*. Except as provided in paragraphs (b) through (d) of this section, each section set forth in subpart B of this part applies according to its terms to motor vehicles and tires manufactured after the effective date indicated.

(b) *Military vehicles*. This part does not apply to motor vehicles or tires sold directly to the Armed Forces of the United States in conformity with contractual specifications.

(c) *Export*. This part does not apply to motor vehicles or tires intended solely for export and so labeled or tagged.

(d) *Import*. This part does not apply to motor vehicles or tires imported for purposes other than resale.

[39 FR 1039, Jan. 4, 1974]

§ 575.5 Separability.

If any section established in this part or its application to any person or circumstances is held invalid, the remainder of the part and the application of that section to other persons or circumstances is not affected thereby.

§ 575.6 Requirements.

(a)(1) At the time a motor vehicle is delivered to the first purchaser for purposes other than resale, the manufacturer of that vehicle shall provide the Uniform Tire Quality Grading information required by § 575.104(d)(1)(iii) in the owner's manual of each vehicle it produces. The vehicle manufacturer shall also provide to the purchaser, in writing and in the English language, the information specified in § 575.103 of this part that is applicable to that vehicle. The information provided with a vehicle may contain more than one table, but the document must either:

(i) Clearly and unconditionally indicate which of the tables apply to the vehicle with which it is provided, or

(ii) Contain a statement on its cover referring the reader to the vehicle certification label for specific information concerning which of the tables apply to that vehicle. If the manufacturer chooses option in paragraph (a)(1)(ii) of this section, the vehicle certification label shall include such specific information.

Example 1. Manufacturer X furnishes a document containing several tables that apply to various groups of vehicles that it produces. The document contains the following notation on its front page: ''The information that applies to this vehicle is contained in Table 5.'' That notation satisfies the requirement.

Example 2. Manufacturer Y furnishes a document containing several tables as in Example 1, with the following notation on its front page:

''Information applies as follows:
Model P. Regular cab, 135 in. (3,430 mm) wheel base—Table 1.
Model P. Club cab, 142 in. (3,607 mm) wheel base—Table 2.
Model Q—Table 3.''

This notation does not satisfy the requirement, since it is conditioned on the model or the equipment of the vehicle with which the document is furnished, and therefore additional information is required to select the proper table.

(2)(i) At the time a motor vehicle manufactured on or after September 1, 1990 is delivered to the first purchaser for purposes other than resale, the manufacturer shall provide to the purchaser, in writing in the English language and not less than 10 point type, the following statement in the owner's manual, or, if there is no owner's manual, on a one-page document:

If you believe that your vehicle has a defect which could cause a crash or could cause injury or death, you should immediately inform the National Highway Traffic Safety Administration (NHTSA) in addition to notifying [INSERT NAME OF MANUFACTURER].

If NHTSA receives similar complaints, it may open an investigation, and if it finds that a safety defect exists in a group of vehicles, it may order a recall and remedy campaign. However, NHTSA cannot become involved in individual problems between you, your dealer, or [INSERT NAME OF MANUFACTURER].

To contact NHTSA, you may call the Vehicle Safety Hotline toll-free at 1–888–327–4236 (TTY: 1–800–424–9153); go to *http://www.safercar.gov*; or write to: Administrator, NHTSA, 400 Seventh Street, SW., Washington, DC 20590. You can also obtain other

information about motor vehicle safety from *http://www.safercar.gov*.

(ii) The manufacturer shall specify in the table of contents of the owner's manual the location of the statement in 575.6(a)(2)(i). The heading in the table of contents shall state ''Reporting Safety Defects.''

(3) For vehicles manufactured prior to September 1, 2000, at the time a motor vehicle is delivered to the first purchaser for purposes other than resale, the manufacturer of that vehicle shall provide the purchaser, in writing and in the English language, the information specified in §§575.103 and 575.104 of this part that is applicable to that vehicle and its tires. The document provided with a vehicle may contain more than one table, but the document must either clearly and unconditionally indicate which of the tables apply to the vehicle with which it is provided, or contain a statement on its cover referring the reader to the vehicle certification label for specific information concerning which of the tables apply to that vehicle. If the manufacturer chooses option (a)(2) of this section, the vehicle certification label shall include such specific information.

Example 1. Manufacturer X furnishes a document containing several tables, which apply to various groups of vehicles that it produces. The document contains the following notation on its front page: ''The information that applies to this vehicle is contained in Table 5.'' The notation satisfies the requirement.

Example 2. Manufacturer Y furnishes a document containing several tables as in Example 1, with the following notation on its front page: Information applies as follows:

Model P, 6-cylinder engine—Table 1.

Model P, 8-cylinder engine—Table 2.

Model Q—Table 3.

This notation does not satisfy the requirement, since it is conditioned on the model or the equipment of the vehicle with which the document is furnished, and therefore additional information is required to select the proper table.

(4) When a motor vehicle that has a GVWR of 10,000 pounds or less, except a motorcycle or low speed vehicle, and that is manufactured on or after September 1, 2005, is delivered to the first purchaser for purposes other than resale, the manufacturer shall provide to the purchaser, in writing in the English language and not less than 10 point type, a discussion of the items specified in paragraphs (a)(4)(i) through (v) of this section in the owner's manual, or, if there is no owner's manual, in a document:

(i) Tire labeling, including a description and explanation of each marking on the tires provided with the vehicle, and information about the location of the Tire Identification Number (TIN);

(ii) Recommended tire inflation pressure, including a description and explanation of:

(A) Recommended cold tire inflation pressure,

(B) The vehicle placard and tire inflation pressure label specified in Federal Motor Vehicle Safety Standard No. 110 and their location in the vehicle,

(C) Adverse safety consequences of underinflation (including tire failure), and

(D) Measuring and adjusting air pressure to achieve proper inflation;

(iii) Glossary of tire terminology, including ''cold tire pressure,'' ''maximum inflation pressure,'' and ''recommended inflation pressure,'' and all non-technical terms defined in S3 of FMVSS Nos. 110 & 139;

(iv) Tire care, including maintenance and safety practices;

(v) Vehicle load limits, including a description and explanation of:

(A) Locating and understanding load limit information, total load capacity, seating capacity, towing capacity, and cargo capacity,

(B) Calculating total and cargo load capacities with varying seating configurations including quantitative examples showing/illustrating how the vehicle's cargo and luggage capacity decreases as the combined number and size of occupants increases,

(C) Determining compatibility of tire and vehicle load capabilities,

(D) Adverse safety consequences of overloading on handling and stopping and on tires.

(5) When a motor vehicle that has a GVWR of 10,000 pounds or less, except a motorcycle or low speed vehicle, and that is manufactured on or after September 1, 2005, is delivered to the first purchaser for purposes other than resale, the manufacturer shall provide to the purchaser, in writing in the

English language and not less than 10 point type, the following verbatim statement, as applicable, in the owner's manual, or, if there is no owner's manual, in a document:

(i) For vehicles except trailers: ''Steps for Determining Correct Load Limit—

(*1*) Locate the statement ''The combined weight of occupants and cargo should never exceed XXX kg or XXX lbs.'' on your vehicle's placard.

(*2*) Determine the combined weight of the driver and passengers that will be riding in your vehicle.

(*3*) Subtract the combined weight of the driver and passengers from XXX kg or XXX lbs.

(*4*) The resulting figure equals the available amount of cargo and luggage load capacity. For example, if the ''XXX'' amount equals 1400 lbs. and there will be five 150 lb passengers in your vehicle, the amount of available cargo and luggage load capacity is 650 lbs. (1400–750 (5 × 150) = 650 lbs.)

(*5*) Determine the combined weight of luggage and cargo being loaded on the vehicle. That weight may not safely exceed the available cargo and luggage load capacity calculated in Step 4.

(*6*) If your vehicle will be towing a trailer, load from your trailer will be transferred to your vehicle. Consult this manual to determine how this reduces the available cargo and luggage load capacity of your vehicle.''

(ii) For trailers: ''Steps for Determining Correct Load Limit—

(*1*) Locate the statement ''The weight of cargo should never exceed XXX kg or XXX lbs.'' on your vehicle's placard.

(*2*) This figure equals the available amount of cargo and luggage load capacity.''

(*3*) Determine the combined weight of luggage and cargo being loaded on the vehicle. That weight may not safely exceed the available cargo and luggage load capacity.

(b) At the time a motor vehicle tire is delivered to the first purchaser for a purpose other than resale, the manufacturer of that tire, or in the case of a tire marketed under a brand name, the brand name owner, shall provide to that purchaser the information specified in subpart B of this part that is applicable to that tire.

(c) Each manufacturer of motor vehicles, each brand name owner of tires, and each manufacturer of tires for which there is no brand name owner shall provide for examination by prospective purchasers, at each location where its vehicles or tires are offered for sale by a person with whom the manufacturer or brand name owner has a contractual, proprietary, or other legal relationship, or by a person who has such a relationship with a distributor of the manufacturer or brand name owner concerning the vehicle or tire in question, the information specified in subpart B of this part that is applicable to each of the vehicles or tires offered for sale at that location. The information shall be provided without charge and in sufficient quantity to be available for retention by prospective purchasers or sent by mail to a prospective purchaser upon his request. With respect to newly introduced vehicles or tires, the information shall be provided for examination by prospective purchasers not later than the day on which the manufacturer or brand name owner first authorizes those vehicles or tires to be put on general public display and sold to consumers.

(d)(1)(i) Except as provided in paragraph (d)(1)(ii) of this section, in the case of all sections of subpart B other than § 575.104, as they apply to information submitted prior to new model introduction, each manufacturer of motor vehicles shall submit to the Administrator 2 copies of the information specified in subpart B of this part that is applicable to the vehicles offered for sale, at least 90 days before information on such vehicles is first provided for examination by prospective purchasers pursuant to paragraph (c) of this section.

(ii) Where an unforeseen preintroduction modification in vehicle design or equipment results in a change in vehicle performance for a characteristic included in subpart B of this part, a manufacturer of motor vehicles may revise information previously furnished under paragraph (d)(1)(i) of this section by submission to the Administrator of 2 copies of the revised information reflecting the performance changes, at least 30 days before information on such vehicles is

first provided to prospective purchasers pursuant to paragraph (c) of this section.

(2)(i) In the case of §575.104, each brand name owner of tires, and each manufacturer of tires for which there is no brand name owner shall submit to the Administrator 2 copies of the information specified in Subpart B of this part that is applicable to the tires offered for sale, at least 30 days before it is first provided for examination by prospective purchasers pursuant to paragraph (c) of this section.

(ii) In the case of all other sections of Subpart B of this Part as they apply to post-introduction changes in information submitted for the current model year, each manufacturer of motor vehicles, each brand name owner of tires, and each manufacturer of tires for which there is no brand name owner shall submit to the Administrator 2 copies of the information specified in Subpart B of this part that is applicable to the vehicles or tires offered for sale, at least 30 days before it is first provided for examination by prospective purchasers pursuant to paragraph (c) of this section.

[39 FR 1039, Jan. 4, 1974, as amended at 41 FR 13923, Apr. 1, 1976; 45 FR 47153, July 14, 1980; 47 FR 7258, Feb. 18, 1982; 52 FR 27810, July 24, 1987; 54 FR 48749, Nov. 27, 1989; 64 FR 27924, May 24, 1999; 67 FR 69631, Nov. 18, 2002; 69 FR 31320, June 3, 2004; 70 FR 35557, June 21, 2005]

§575.7 Special vehicles.

A manufacturer who produces vehicles having a configuration not available for purchase by the general public need not make available to ineligible purchasers, pursuant to §575.6(c), the information for those vehicles specified in subpart B of this part, and shall identify those vehicles when furnishing the information required by §575.6(d).

[40 FR 11727, Mar. 13, 1975]

Subpart B—Regulations; Consumer Information Items

§§575.101–575.102 [Reserved]

§575.103 Truck-camper loading.

(a) *Scope*. This section requires manufacturers of slide-in campers to affix to each camper a label that contains information relating to identification and proper loading of the camper and to provide more detailed loading information in the owner's manual. This section also requires manufacturers of trucks that would accommodate slide-in campers to specify the cargo weight ratings and the longitudinal limits within which the center of gravity for the cargo weight rating should be located.

(b) *Purpose*. The purpose of this section is to provide information that can be used to reduce overloading and improper load placement in truck-camper combinations and unsafe truck- camper matching in order to prevent accidents resulting from the adverse effects of these conditions on vehicle steering and braking.

(c) *Application*. This section applies to slide-in campers and to trucks that are capable of accommodating slide- in campers.

(d) *Definitions*.

Camper means a structure designed to be mounted in the cargo area of a truck, or attached to an incomplete vehicle with motive power, for the purpose of providing shelter for persons.

Cargo Weight Rating means the value specified by the manufacturer as the cargo-carrying capacity, in pounds or kilograms, of a vehicle, exclusive of the weight of occupants in designated seating positions, computed as 68 kilograms or 150 pounds times the number of designated seating positions.

Slide-in Camper means a camper having a roof, floor, and sides, designed to be mounted on and removable from the cargo area of a truck by the user.

(e) *Requirements*—(1) *Slide-in Camper*—(i) *Labels*. Each slide-in camper shall have permanently affixed to it, in such a manner that it cannot be removed without defacing or destroying it, and in a plainly visible location on an exterior rear surface other than the roof, steps, or bumper extension, a label containing the following information in the English language lettered in block capitals and numerals not less than 2.4 millimeters (three thirty-seconds of an inch) high, of a color contrasting with the background, in the order shown below and in the form illustrated in Figure 1.

(A) *Name of camper manufacturer*. The full corporate or individual name of

the actual assembler of the camper shall be spelled out, except that such abbreviations as ''Co.'' or ''Inc.'' and their foreign equivalents, and the first and middle initials of individuals may be used. The name of the manufacturer shall be preceded by the words ''Manufactured by'' or ''Mfd by.''

(B) *Month and year of manufacture.* It may be spelled out, such as ''June 1995'' or expressed in numerals, such as ''695.''

(C) The following statement completed as appropriate:

''Camper weight is _____ kg. (_____ lbs.) maximum when it contains standard equipment, _____ liters (_____ gal.) of water, _____ kg. (_____ lbs.) of bottled gas, and _____ cubic meters (_____ cubic ft.) refrigerator (or icebox with _____ kg. (_____ lbs.) of ice, as applicable). Consult owner's manual (or data sheet, as applicable) for weights of additional or optional equipment.''

(D) ''Liters (or gal.) of water'' refers to the volume of water necessary to fill the camper's fresh water tanks to capacity. ''Kg. (or lbs.) of bottled gas'' refers to the amount of gas necessary to fill the camper's bottled gas tanks to capacity. The statement regarding a ''refrigerator'' or ''icebox'' refers to the capacity of the refrigerator with which the vehicle is equipped or the weight of the ice with which the icebox may be filled. Any of these items may be omitted from the statement if the corresponding accessories are not included with the camper, provided that the omission is noted in the camper owner's manual as required in paragraph (e)(1)(ii) of this section.

(ii) *Owner's manual.* Each slide-in camper manufacturer shall provide with each camper a manual or other document containing the information specified in paragraph (e)(1)(ii) (A) through (F) of this section.

(A) The statement and information provided on the label as specified in paragraph (e)(1)(i) of this section. Instead of the information required by paragraphs (e)(1)(i)(B) of this section, a manufacturer may use the statements ''See camper identification label located (as applicable) for month and year of manufacture.'' If water, bottled gas, or refrigerator (icebox) has been omitted from this statement, the manufacturer's information shall note such omission and advise that the weight of any such item when added to the camper should be added to the maximum camper weight figure used in selecting an appropriate truck.

(B) A list of other additional or optional equipment that the camper is designed to carry, and the maximum weight of each if its weight is more than 9 kg. (20 lbs) when installed.

(C) The statement: ''To estimate the total cargo load that will be placed on a truck, add the weight of all passengers in the camper, the weight of supplies, tools, and all other cargo, the weight of installed additional or optional camper equipment, and the manufacturer's camper weight figure. Select a truck that has a cargo weight rating that is equal to or greater than the total cargo load of the camper and whose manufacturer recommends a cargo center of gravity zone that will contain the camper's center of gravity when it is installed.''

(D) The statements: ''When loading this camper, store heavy gear first, keeping it on or close to the camper floor. Place heavy things far enough forward to keep the loaded camper's center of gravity within the zone recommended by the truck manufacturer. Store only light objects on high shelves. Distribute weight to obtain even side-to-side balance of the loaded vehicle. Secure loose items to prevent weight shifts that could affect the balance of your vehicle. When the truck-camper is loaded, drive to a scale and weigh on the front and on the rear wheels separately to determine axle loads. The load on an axle should not exceed its gross axle weight rating (GAWR). The total of the axle loads should not exceed the gross vehicle weight rating (GVWR). These weight ratings are given on the vehicle certification label that is located on the left side of the vehicle, normally on the dash panel, hinge pillar, door latch post, or door edge next to the driver on trucks manufactured on or after January 1, 1972. If weight ratings are exceeded, move or remove items to bring all weights below the ratings.''

(E) A picture showing the location of the longitudinal center of gravity of the camper within an accuracy of 5 centimeters (2 inches) under the loaded condition specified in paragraph (e)(1)(i)(D) of this section in the manner illustrated in Figure 2.

(F) A picture showing the proper match of a truck and slide-in camper in the form illustrated in Figure 3.

(2) *Trucks*. (i) Except as provided in paragraph (e)(2)(ii) of this section, each manufacturer of a truck that is capable of accommodating a slide-in camper shall provide to the purchaser in the owner's manual or other document delivered with the truck, in writing and in the English language, the information specified in paragraphs (e)(2)(i) (A) through (E) of this section.

(A) A picture showing the manufacturer's recommended longitudinal center of gravity zone for the cargo weight rating in the form illustrated in Figure 4. The boundaries of the zone shall be such that when a slide-in camper equal in weight to the truck's cargo weight rating is installed, no GAWR of the truck is exceeded.

(B) The truck's cargo weight rating.

(C) The statements: ''When the truck is used to carry a slide-in camper, the total cargo load of the truck consists of the manufacturer's camper weight figure, the weight of installed additional camper equipment not included in the manufacturer's camper weight figure, the weight of camper cargo, and the weight of passengers in the camper. The total cargo load should not exceed the truck's cargo weight rating and the camper's center of gravity should fall within the truck's recommended center of gravity zone when installed.''

(D) A picture showing the proper match of a truck and slide-in camper in the form illustrated in Figure 3.

(E) The statements: ''Secure loose items to prevent weight shifts that could affect the balance of your vehicle. When the truck camper is loaded, drive to a scale and weigh on the front and on the rear wheels separately to determine axle loads. Individual axle loads should not exceed either of the gross axle weight ratings (GAWR). The total of the axle loads should not exceed the gross vehicle weight rating (GVWR). These ratings are given on the vehicle certification label that is located on the left side of the vehicle, normally the dash, hinge pillar, door latch post, or door edge next to the driver. If weight ratings are exceeded, move or remove items to bring all weights below the ratings.''

(ii) If a truck would accommodate a slide-in camper but the manufacturer of the truck recommends that the truck not be used for that purpose, the information specified in paragraph (e)(2)(i) of this section shall not be provided but instead the manufacturer shall provide a statement that the truck should not be used to carry a slide-in camper.

MFD. BY: (CAMPER MANUFACTURER'S NAME)

(MONTH AND YEAR OF MANUFACTURE)

CAMPER WEIGHT IS _____ KG (_____ LB) MAXIMUM WHEN IT CONTAINS STANDARD EQUIPMENT, _____ LITERS (_____ GAL) OF WATER, _____ KG (_____ LB) OF BOTTLED GAS, AND _____ CUBIC METERS (_____ CUBIC FT) REFRIGERATOR (OR ICEBOX WITH _____ KG (_____ LB) OF ICE, AS APPLICABLE). CONSULT OWNER'S MANUAL (OR DATA SHEET AS APPLICABLE) FOR WEIGHTS OF ADDITIONAL OR OPTIONAL EQUIPMENT.

FIGURE 1. LABEL FOR CAMPER

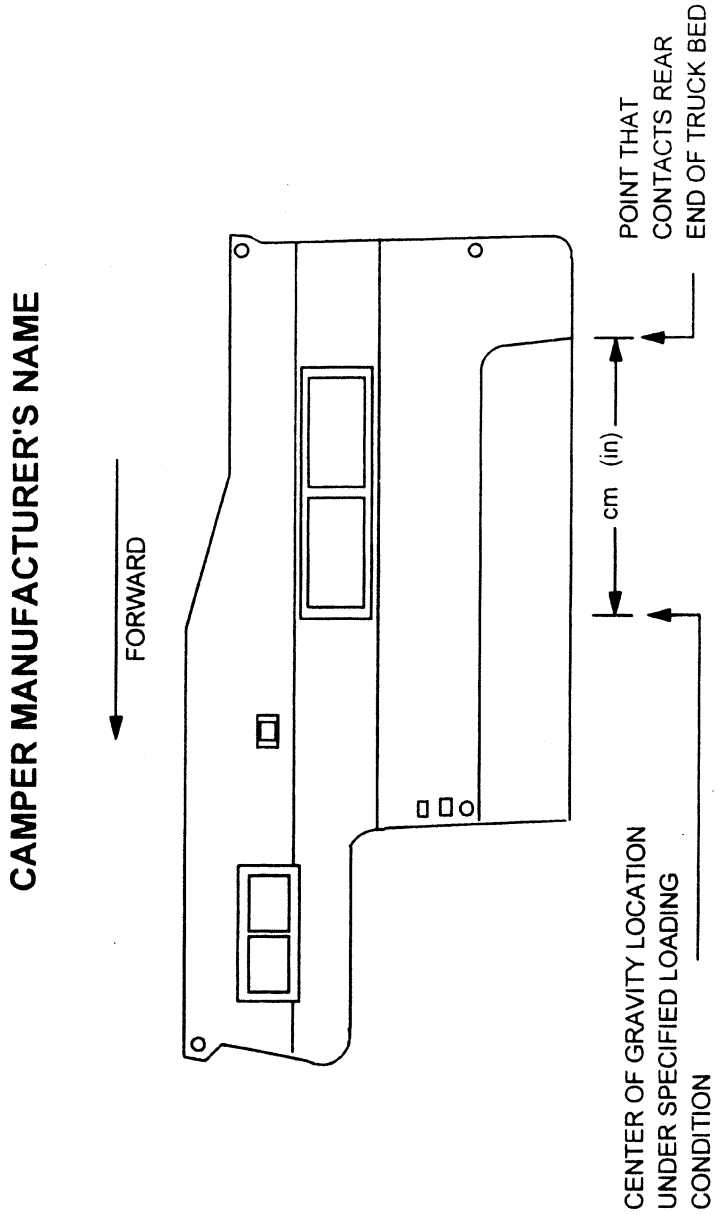

FGIURE 2. CAMPER CENTER OF GRAVITY INFORMATION

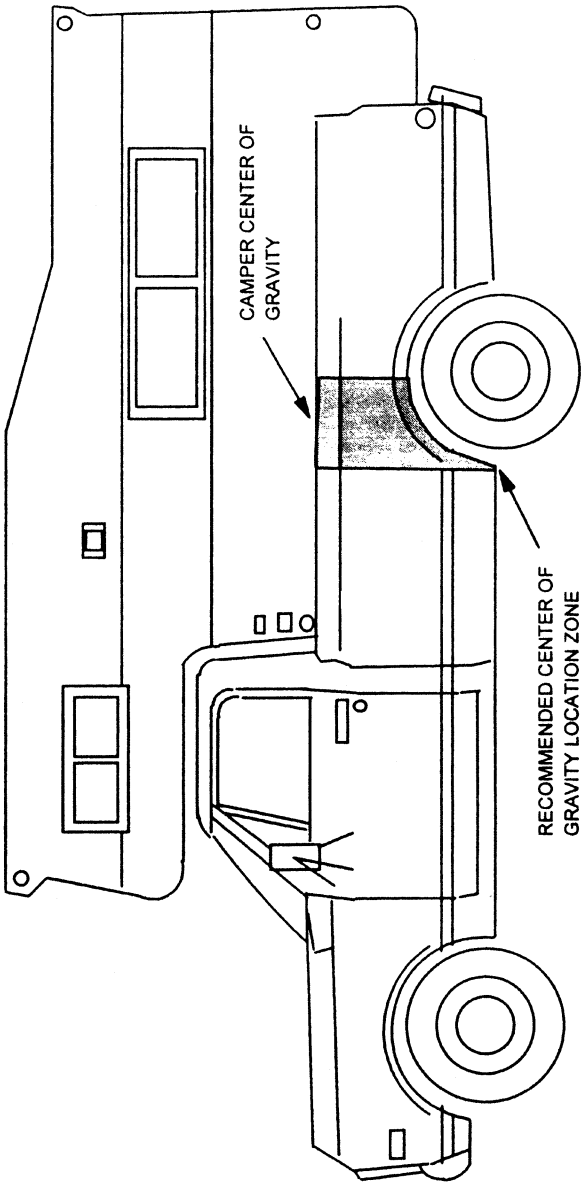

FIGURE 3. EXAMPLE OF PROPER TRUCK AND CAMPER MATCH

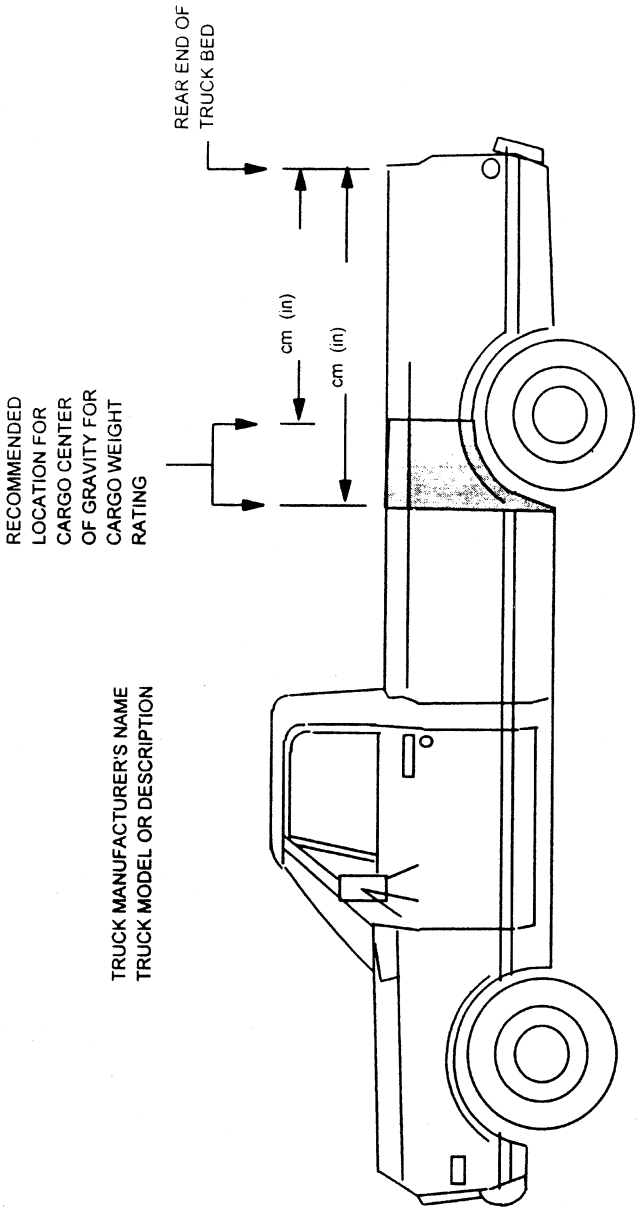

FIGURE 4. TRUCK LOADING INFORMATION

[61 FR 36657, July 12, 1996, as amended at 70 FR 39970, July 12, 2005]

§ 575.104 Uniform tire quality grading standards.

(a) *Scope*. This section requires motor vehicle and tire manufacturers and tire brand name owners to provide information indicating the relative performance of passenger car tires in the areas of treadwear, traction, and temperature resistance.

(b) *Purpose*. The purpose of this section is to aid the consumer in making an informed choice in the purchase of passenger car tires.

(c) *Application*. (1) This section applies to new pneumatic tires for use on passenger cars. However, this section does not apply to deep tread, winter-type snow tires, space-saver or temporary use spare tires, tires with nominal rim diameters of 12 inches or less, or to limited production tires as defined in paragraph (c)(2) of this section.

(2) ''Limited production tire'' means a tire meeting all of the following criteria, as applicable:

(i) The annual domestic production or importation into the United States by the tire's manufacturer of tires of the same design and size as the tire does not exceed 15,000 tires;

(ii) In the case of a tire marketed under a brand name, the annual domestic purchase or importation into the United States by a brand name owner of tires of the same design and size as the tire does not exceed 15,000 tires;

(iii) The tire's size was not listed as a vehicle manufacturer's recommended tire size designation for a new motor vehicle produced in or imported into the United States in quantities greater than 10,000 during the calendar year preceeding the year of the tire's manufacture; and

(iv) The total annual domestic production or importation into the United States by the tire's manufacturer, and in the case of a tire marketed under a brand name, the total annual domestic purchase or purchase for importation into the United States by the tire's brand name owner, of tires meeting the criteria of paragraphs (c)(2) (i), (ii), and (iii) of this section, does not exceed 35,000 tires.

Tire design is the combination of general structural characteristics, materials, and tread pattern, but does include cosmetic, identifying or other minor variations among tires.

(d) *Requirements*—(1) *Information*. (i) Each manufacturer of tires, or in the case of tires marketed under a brand name, each brand name owner, shall provide grading information for each tire of which he is the manufacturer or brand name owner in the manner set forth in paragraphs (d)(1)(i) (A) and (B) of this section. The grades for each tire shall be only those specified in paragraph (d)(2) of this section. Each tire shall be able to achieve the level of performance represented by each grade with which it is labeled. An individual tire need not, however, meet further requirements after having been subjected to the test for any one grade.

(A) Except for a tire of a new tire line, manufactured within the first six months of production of the tire line, each tire shall be graded with the words, letters, symbols, and figures specified in paragraph (d)(2) of this section, permanently molded into or onto the tire sidewall between the tire's maximum section width and shoulder in accordance with one of the methods described in Figure 1. For purposes of this paragraph, new tire line shall mean a group of tires differing substantially in construction, materials, or design from those previously sold by the manufacturer or brand name owner of the tires. As used in this paragraph, the term ''construction'' refers to the internal structure of the tire (e.g., cord angles, number and placement of breakers), ''materials'' refers to the substances used in manufacture of the tire (e.g., belt fiber, rubber compound), and ''design'' refers to properties or conditions imposed by the tire mold (e.g., aspect ratio, tread pattern).

(B) Each tire manufactured on and after the effective date of these amendments, other than a tire sold as original equipment on a new vehicle, shall have affixed to its tread surface so as not to be easily removable a label or labels containing its grades and other information in the form illustrated in Figure 2, Parts I and II. The treadwear grade attributed to the tire shall be either imprinted or indelibly stamped on the label containing the material in Part I of Figure 2, directly to the right of or below the word ''TREADWEAR.''

The traction grade attributed to the tire shall be indelibly circled in an array of the potential grade letters AA, A, B, or C, directly to the right of or below the word ''TRACTION'' in Part I of Figure 2. The temperature resistance grade attributed to the tire shall be indelibly circled in an array of the potential grade letters A, B, or C, directly to the right of or below the word ''TEMPERATURE'' in Part I of Figure 2. The words ''TREADWEAR,'' ''TRACTION,'' AND ''TEMPERATURE,'' in that order, may be laid out vertically or horizontally. The text of Part II of Figure 2 may be printed in capital letters. The text of Part I and the text of Part II of Figure 2 need not appear on the same label, but the edges of the two texts must be positioned on the tire tread so as to be separated by a distance of no more than one inch. If the text of Part I and the text of Part II of Figure 2 are placed on separate labels, the notation ''See EXPLANATION OF DOT QUALITY GRADES'' shall be added to the bottom of the Part I text, and the words ''EXPLANATION OF DOT QUALITY GRADES'' shall appear at the top of the Part II text. The text of Figure 2 shall be oriented on the tire tread surface with lines of type running perpendicular to the tread circumference. If a label bearing a tire size designation is attached to the tire tread surface and the tire size designation is oriented with lines type running perpendicular to the tread circumference, the text of Figure 2 shall read in the same direction as the tire size designation.

(ii) In the case of the information required by § 575.6(c) to be furnished to prospective purchasers of tires, each tire manufacturer or brand name owner shall, as part of that information, list all possible grades for traction and temperature resistance, and restate verbatim the explanation for each performance area specified in Figure 2. The information need not be in the same format as in Figure 2. The information must indicate clearly and unambiguously the grade in each performance area for each tire of that manufacturer or brand name owner offered for sale at the particular location.

(iii) Each manufacturer of motor vehicles equipped with passenger car tires shall include in the owner's manual of each such vehicle a list of all possible grades for traction and temperature resistance and restate verbatim the explanation for each performance area specified in Figure 2, Part II. The information need not be in the exact format of Figure 2, Part II, but it must contain a statement referring the reader to the tire sidewall for the specific tire grades for the tires with which the vehicle is equipped, as follows:

UNIFORM TIRE QUALITY GRADING

Quality grades can be found where applicable on the tire sidewall between tread shoulder and maximum section width. For example:

TREADWEAR 200 TRACTION AA
TEMPERATURE A

(iv) In the case of information required in accordance with § 575.6(a) to be furnished to the first purchaser of a new motor vehicle, each manufacturer of motor vehicles shall, as part of the required information, list all possible grades for traction and temperature resistance and restate verbatim the explanation for each performance area specified in Figure 2 to this section. The information need not be in the format of Figure 2 to this section, but it must contain a statement referring the reader to the tire sidewall for the specific tire grades for the tires with which the vehicle is equipped.

(2) *Performance*—(i) *Treadwear*. Each tire shall be graded for treadwear performance with the word ''TREADWEAR'' followed by a number of two or three digits representing the tire's grade for treadwear, expressed as a percentage of the NHTSA nominal treadwear value, when tested in accordance with the conditions and procedures specified in paragraph (e) of this section. Treadwear grades shall be expressed in multiples of 20 (for example, 80, 120, 160).

(ii) *Traction*. Each tire shall be graded for traction performance with the word ''TRACTION,'' followed by the symbols AA, A, B, or C, when the tire is tested in accordance with the conditions and

procedures specified in paragraph (f) of this section.

(A) The tire shall be graded C when the adjusted traction coefficient is either:

(*1*) 0.38 or less when tested in accordance with paragraph (f)(2) of this section on the asphalt surface specified in paragraph (f)(1)(i) of this section, or

(*2*) 0.26 or less when tested in accordance with paragraph (f)(2) of this section on the concrete surface specified in paragraph (f)(1)(i) of this section.

(B) The tire may be graded B only when its adjusted traction coefficient is both:

(*1*) More than 0.38 when tested in accordance with paragraph (f)(2) of this section on the asphalt surface specified in paragraph (f)(1)(i) of this section, and

(*2*) More than 0.26 when tested in accordance with paragraph (f)(2) of this section on the concrete surface specified in paragraph (f)(1)(i) of this section.

(C) The tire may be graded A only when its adjusted traction coefficient is both:

(*1*) More than 0.47 when tested in accordance with paragraph (f)(2) of this section on the asphalt surface specified in paragraph (f)(1)(i) of this section, and

(*2*) More than 0.35 when tested in accordance with paragraph (f)(2) of this section on the concrete surface specified in paragraph (f)(1)(i) of this section.

(D) The tire may be graded AA only when its adjusted traction coefficient is both:

(*1*) More than 0.54μ when tested in accordance with paragraph (f)(2) of this section on the asphalt surface specified in paragraph (f)(1)(i) of this section; and

(*2*) More than 0.38μ when tested in accordance with paragraph (f)(2) of this section on the concrete surface specified in paragraph (f)(1)(i) of this section.

(iii) *Temperature resistance.* Each tire shall be graded for temperature resistance performance with the word ''TEMPERATURE'' followed by the letter A, B, or C, based on its performance when the tire is tested in accordance with the procedures specified in paragraph (g) of this section. A tire shall be considered to have successfully completed a test stage in accordance with this paragraph if, at the end of the test stage, it exhibits no visual evidence of tread, sidewall, ply, cord, innerliner, or bead separation, chunking, broken cords, cracking or open splices as defined in §571.109 of this chapter, and the tire pressure is not less than the pressure specified in paragraph (g)(1) of this section.

(A) The tire shall be graded C if it fails to complete the 500 rpm test stage specified in paragraph (g)(9) of this section.

(B) The tire may be graded B only if it successfully completes the 500 rpm test stage specified in paragraph (g)(9) of this section.

(C) The tire may be graded A only if it successfully completes the 575 rpm test stage specified in paragraph (g)(9) of this section.

(e) *Treadwear grading conditions and procedures*—(1) *Conditions.* (i) Tire treadwear performance is evaluated on a specific roadway course approximately 400 miles in length, which is established by the NHTSA both for its own compliance testing and for that of regulated persons. The course is designed to produce treadwear rates that are generally representative of those encountered by tires in public use. The course and driving procedures are described in appendix A of this section.

(ii) Treadwear grades are evaluated by first measuring the performance of a candidate tire on the government test course, and then correcting the projected mileages obtained to account for environmental variations on the basis of the performance of the course monitoring tires run in the same convoy.

(iii) In convoy tests, each vehicle in the same convoy, except for the lead vehicle, is throughout the test within human eye range of the vehicle immediately ahead of it.

(iv) A test convoy consists of two or four passenger cars, light trucks, or MPVs, each with a GVWR of 10,000 pounds or less.

(v) On each convoy vehicle, all tires are mounted on identical rims of design or measuring rim width specified for tires of that size in accordance with

49 CFR 571.109, S4.4.1 (a) or (b), or a rim having a width within −0 to +0.50 inches of the width listed.

(2) *Treadwear grading procedure.* (i) Equip a convoy as follows: Place four course monitoring tires on one vehicle. Place four candidate tires with identical size designations on each other vehicle in the convoy. On each axle, place tires that are identical with respect to manufacturer and line.

(ii) Inflate each candidate and each course monitoring tire to the applicable pressure specified in Table 1 of this section.

(iii) Load each vehicle so that the load on each course monitoring and candidate tire is 85 percent of the test load specified in § 575.104(h).

(iv) Adjust wheel alignment to the midpoint of the vehicle manufacturer's specifications, unless adjustment to the midpoint is not recommended by the manufacturer; in that case, adjust the alignment to the manufacturer's recommended setting. In all cases, the setting is within the tolerance specified by the manufacturer of the alignment machine.

(v) Subject candidate and course monitoring tires to ''break-in'' by running the tires in the convoy for two circuits of the test roadway (800 miles). At the end of the first circuit, rotate each vehicle's tires by moving each front tire to the same side of the rear axle and each rear tire to the opposite side of the front axle. Visually inspect each tire for any indication of abnormal wear, tread separation, bulging of the sidewall, or any sign of tire failure. Void the grading results from any tire with any of these anomalies, and replace the tire.

(vi) After break-in, allow the air pressure in the tires to fall to the applicable pressure specified in Table 1 of this section or for 2 hours, whichever occurs first. Measure, to the nearest 0.001 inch, the tread depth of each candidate and each course monitoring tire, avoiding treadwear indicators, at six equally spaced points in each groove. For each tire compute the average of the measurements. Do not measure those shoulder grooves which are not provided with treadwear indicators.

(vii) Adjust wheel alignment to the midpoint of the manufacturer's specifications, unless adjustment to the midpoint is not recommended by the manufacturer; in that case, adjust the alignment according to the manufacturer's recommended setting. In all cases, the setting is within the tolerance specified by the manufacturer of the alignment machine.

(viii) Drive the convoy on the test roadway for 6,400 miles.

(A) After each 400 miles, rotate each vehicle's tires by moving each front tire to the same side of the rear axle and each rear tire to the opposite side of the front axle. Visually inspect each tire for treadwear anomalies.

(B) After each 800 miles, rotate the vehicles in the convoy by moving the last vehicle to the lead position. Do not rotate driver positions within the convoy. In four-car convoys, vehicle one shall become vehicle two, vehicle two shall become vehicle three, vehicle three shall become vehicle four, and vehicle four shall become vehicle one.

(C) After each 800 miles, if necessary, adjust wheel alignment to the midpoint of the vehicle manufacturer's specification, unless adjustment to the midpoint is not recommended by the manufacturer; in that case, adjust the alignment to the manufacturer's recommended setting. In all cases, the setting is within the tolerance specified by the manufacturer of the alignment machine.

(D) After each 800 miles, if determining the projected mileage by the 9-point method set forth in (e)(2)(ix)(A)(1), measure the average tread depth of each tire following the procedure set forth in paragraph (e)(2)(vi) of this section.

(E) After each 1,600 miles, move the complete set of four tires to the following vehicle. Move the tires on the last vehicle to the lead vehicle. In moving the tires, rotate them as set forth in (e)(2)(viii)(A) of this section.

(F) At the end of the test, measure the tread depth of each tire pursuant to the procedure set forth in paragraph (e)(2)(vi) of this section.

(ix)(A) Determine the projected mileage for each candidate tire either by the nine-point method of least squares set forth in paragraph (e)(2)(ix)(A)(*1*) of this section and appendix C to this section, or by the two-point arithmetical

method set forth in paragraph (e)(2)(ix)(A)(*2*) of this section. Notify NHTSA about which of the alternative grading methods is being used.

(*1*) *Nine-Point Method of Least Squares.* For each course monitoring and candidate tire in the convoy, using the average tread depth measurements obtained in accordance with paragraphs (e)(2)(vi) and (e)(2)(viii)(D) of this section and the corresponding mileages as data points, apply the method of least squares as described in appendix C to this section to determine the estimated regression line of y on x given by the following formula:

$$y = a + \frac{bx}{1000}$$

Where:

y = average tread depth in mils
x = miles after break-in,
a = y intercept of regression line (reference tread depth) in mils, calculated using the method of least squares; and
b = the slope of the regression line in mils of tread depth per 1,000 miles, calculated using the method of least squares. This slope will be negative in value. The tire's wear rate is defined as the absolute value of the slope of the regression line.

(*2*) *Two-Point Arithmetical Method.* For each course monitoring and candidate tire in the convoy, using the average tread depth measurements obtained in accordance with paragraph (e)(2)(vi) and (e)(2)(viii)(F) of this section and the corresponding mileages as data points, determine the slope (m) of the tire's wear in mils of tread depth per 1,000 miles by the following formula:

$$m = 1000\frac{(Y1 - Yo)}{(X1 - Xo)}$$

Where:

Yo = average tread depth after break-in, mils
Y1 = average tread depth at 6,400 miles, mils
Xo = 0 miles (after break-in).
X1 = 6,400 miles of travel

This slope (m) will be negative in value. The tire's wear rate is defined as the slope (m) expressed in mils per 1,000 miles.

(B) Average the wear rates of the four course monitoring tires as determined in accordance with paragraph (e)(2)(ix)(A) of this section.

(C) Determine the course severity adjustment factor by dividing the base course wear rate for the course monitoring tires (*see Note* to this paragraph) by the average wear rate for the four course monitoring tires.

Note to paragraph (e)(2)(ix)(C): The base wear rate for the course monitoring tires will be obtained by the government by running the tire specified in ASTM E 1136 (incorporated by reference, *see* §575.3) course monitoring tires for 6,400 miles over the San Angelo, Texas, UTQGS test route 4 times per year, then using the average wear rate from the last 4 quarterly CMT tests for the base course wear rate calculation. Each new base course wear rate will be published in the FEDERAL REGISTER. The course monitoring tires used in a test convoy must be no more than one year old at the commencement of the test and must be used within two months after removal from storage.

(D) Determine the adjusted wear rate for each candidate tire by multiplying its wear rate determined in accordance with paragraph (e)(2)(ix)(A) of this section by the course severity adjustment factor determined in accordance with paragraph (e)(2)(ix)(C) of this section.

(E) Determine the projected mileage for each candidate tire by applying the appropriate formula set forth below:

(*1*) If the projected mileage is calculated pursuant to paragraph (e)(2)(ix)(A)(*1*) of this section, then:

$$\text{Projected mileage} = \frac{1000(a - 62)}{b^1} + 800$$

Where:

a = y intercept of regression line (reference tread depth) for the candidate tire as determined in accordance with paragraph (e)(2)(ix)(A)(*1*) of this section.
b^1 = the adjusted wear rate for the candidate tire as determined in accordance with paragraph (e)(2)(ix)(D) of this section.

(*2*) If the projected mileage is calculated pursuant to (e)(2)(ix)(a)(*2*) of this section, then:

$$\text{Projected mileage} = \frac{-1000(Yo - 62)}{mc} + 800$$

Where:

Yo = average tread depth after break-in, mils
mc = the adjusted wear rate for the candidate tires as determined in accordance with paragraph (e)(2)(ix)(D) of this section.

(F) Compute the grade (P) of the NHTSA nominal treadwear value for each candidate tire by using the following formula:

$$P = \text{Projected mileage} \times \text{base course wear rate}_n/402$$

Where base course wear rate_n = new base course wear rate, *i.e.*, average treadwear of the last 4 quarterly course monitoring tire tests conducted by NHTSA.

Round off the percentage to the nearest lower 20-point increment.

(f) *Traction grading conditions and procedures*—(1) *Conditions.* (i) Tire traction performance is evaluated on skid pads that are established, and whose severity is monitored, by the NHTSA both for its compliance testing and for that of regulated persons. The test pavements are asphalt and concrete surfaces constructed in accordance with the specifications for pads ''C'' and ''A'' in the ''Manual for the Construction and Maintenance of Skid Surfaces,'' National Technical Information Service No. DOT-HS-800-814. The surfaces have locked wheel traction coefficients when evaluated in accordance with paragraphs (f)(2)(i) through (f)(2)(vii) of this section of 0.50 ±0.10 for the asphalt and 0.35 ±0.10 for the concrete. The location of the skid pads is described in appendix B to this section.

(ii) The standard tire is the tire specified in ASTM E 501 (incorporated by reference, *see* § 575.3).

(iii) The pavement surface is wetted in accordance with paragraph 4.7, ''Pavement Wetting System,'' of ASTM E 274 (incorporated by reference, *see* § 575.3).

(iv) The test apparatus is a test trailer built in conformity with the specifications in paragraph 4, ''Apparatus,'' of ASTM E 274 (incorporated by reference, *see* § 575.3). The test apparatus is instrumented in accordance with paragraph 4.5 of that method, except that the ''wheel load'' in paragraph 4.3 and tire and rim specifications in paragraph 4.4 of that method are as specified in the procedures in paragraph (f)(2) of this section for standard and candidate tires.

(v) The test apparatus is calibrated in accordance with ASTM F 377 (incorporated by reference, *see* § 575.3), with the trailer's tires inflated to 24 psi and loaded to 1,085 pounds.

(vi) Consecutive tests on the same surface are conducted not less than 30 seconds apart.

(vii) A standard tire is discarded in accordance with ASTM E 501 (incorporated by reference, *see* § 575.3).

(2) *Procedure.* (i) Prepare two standard tires as follows:

(A) Condition the tires by running them for 200 miles on a pavement surface.

(B) Mount each tire on a rim of design or measuring rim width specified for tires of its size in accordance with 49 CFR 571.109, S4.4.1 (a) or (b), or a rim having a width within −0 to +0.50 inches of the width listed. Then inflate the tire to 24 psi, or, in the case of a tire with inflation pressure measured in kilopascals, to 180 kPa.

(C) Statically balance each tire-rim combination.

(D) Allow each tire to cool to ambient temperature and readjust its inflation pressure to 24 psi, or, in the case of a tire with inflation pressure measured in kilopascals, to 180 kPa.

(ii) Mount the tires on the test apparatus described in paragraph (f)(1)(iv) of this section and load each tire to 1,085 pounds.

(iii) Tow the trailer on the asphalt test surface specified in paragraph (f)(1)(i) of this section at a speed of 40 mph, lock one trailer wheel, and record the locked-wheel traction coefficient on the tire associated with that wheel between 0.5 and 1.5 seconds after lockup.

(iv) Repeat the test on the concrete surface, locking the same wheel.

(v) Repeat the tests specified in paragraphs (f)(2) (iii) and (iv) of this section for a total of 10 measurements on each test surface.

(vi) Repeat the procedures specified in paragraphs (f)(2) (iii) through (v) of this section, locking the wheel associated with the other tire.

(vii) Average the 20 measurements taken on the asphalt surface to find the standard tire traction coefficient for the asphalt surface. Average the 20 measurements taken on the concrete

surface to find the standard tire traction coefficient for the concrete surface. The standard tire traction coefficient so determined may be used in the computation of adjusted traction coefficients for more than one candidate tire.

(viii) Prepare two candidate tires of the same construction type, manufacturer, line, and size designation in accordance with paragraph (f)(2)(i) of this section, mount them on the test apparatus, and test one of them according to the procedures of paragraph (f)(2)(ii) through (v) of this section, except load each tire to 85% of the test load specified in §575.104(h). For CT tires, the test inflation of candidate tires shall be 230 kPa. Candidate tire measurements may be taken either before or after the standard tire measurements used to compute the standard tire traction coefficient. Take all standard tire and candidate tire measurements used in computation of a candidate tire's adjusted traction coefficient within a single three hour period. Average the 10 measurements taken on the asphalt surface to find the candidate tire traction coefficient for the asphalt surface. Average the 10 measurements taken on the concrete surface to find the candidate tire traction coefficient for the concrete surface.

(ix) Compute a candidate tire's adjusted traction coefficient for asphalt (μ_a) by the following formula:

(μ_a) = Measured candidate tire coefficient for asphalt+0.50 − Measured standard tire coefficient for asphalt

(x) Compute a candidate tire's adjusted traction coefficient for concrete (μ_c) by the following formula:

μ_c=Measured candidate tire coefficient for concrete +0.35 μMeasured standard tire coefficient for concrete

(g) *Temperature resistance grading.* (1) Mount the tire on a rim of design or measuring rim width specified for tires of its size in accordance with §571.109, paragraph S4.4.1 (a) or (b) and inflate it to the applicable pressure specified in Table 1 of this section.

(2) Condition the tire-rim assembly to a temperature of 95 °F for at least 3 hours.

(3) Adjust the pressure again to the applicable pressure specified in Table 1 of this section.

(4) Mount the tire-rim assembly on an axle, and press the tire tread against the surface of a flat-faced steel test wheel that is 67.23 inches in diameter and at least as wide as the section width of the tire.

(5) During the test, including the pressure measurements specified in paragraphs (g) (1) and (3) of this section, maintain the temperature of the ambient air, as measured 12 inches from the edge of the rim flange at any point on the circumference on either side of the tire at 95 °F. Locate the temperature sensor so that its readings are not affected by heat radiation, drafts, variations in the temperature of the surrounding air, or guards or other devices.

(6) Press the tire against the test wheel with a load of 88 percent of the tire's maximum load rating as marked on the tire sidewall.

(7) Rotate the test wheel at 250 rpm for 2 hours.

(8) Remove the load, allow the tire to cool to 95 °F or for 2 hours, whichever occurs last, and readjust the inflation pressure to the applicable pressure specified in Table 1 of this section.

(9) Reapply the load and without interruption or readjustment of inflation pressure, rotate the test wheel at 375 rpm for 30 minutes, and then at successively higher rates in 25 rpm increments, each for 30 minutes, until the tire has run at 575 rpm for 30 minutes, or to failure, whichever occurs first.

TABLE I—TEST INFLATION PRESSURES

[Maximum permissible inflation pressure for the following test]

Test type	Tires other than CT tires									CT tires			
	psi				kPa					kPa			
	32	36	40	60	240	280	300	340	350	290	330	350	390
Treadwear test	24	28	32	52	180	220	180	220	180	230	270	230	270
Temperature resistant test	30	34	38	58	220	260	220	260	220	270	310	270	310

(h) *Determination of test load.* (1) To determine test loads for purposes of paragraphs (e)(2)(iii) and (f)(2)(viii), follow the procedure set forth in paragraphs (h) (2) through (5) of this section.

(2) Determine the tire's maximum inflation pressure and maximum load rating both as specified on the tire's sidewall.

(3) Determine the appropriate multiplier corresponding to the tire's maximum inflation pressure, as set forth in Table 2.

(4) Multiply the tire's maximum load rating by the multiplier determined in paragraph (h)(3). This is the tire's calculated load.

(5) Round the product determined in paragraph (h)(4) (the calculated load) to the nearest multiple of ten pounds or, if metric units are used, 5 kilograms. For example, 903 pounds would be rounded to 900 and 533 kilograms would be rounded to 535. This figure is the test load.

TABLE 2

Maximum inflation pressure	Multiplier to be used for treadwear testing	Multiplier to be used for traction testing
Tires other than CT tires		
32 psi	.851	.851
36 psi	.870	.797
40 psi	.883	.753
240 kPa	.866	.866
280 kPa	.887	.804
300 kPa	.866	.866
340 kPa	.887	.804
350 kPa	.866	.866
CT tires		
290 kPa	.866	.866
330 kPa	.887	.804
305 kPa	.866	.866
390 kPa	.887	.804

TABLE 2A

Tire size designation	Temp resistance			Traction	Treadwear		
	Max pressure				Max pressure		
	32	36	40		32	36	40
145/70 R13	615	650	685	523	523	553	582
155/70 R13	705	740	780	599	599	629	663
165/70 R13	795	835	880	676	676	710	748
175/70 R13	890	935	980	757	757	795	833
185/70 R13	990	1040	1090	842	842	884	926
195/70 R13	1100	1155	1210	935	935	982	1029
155/70 R14	740	780	815	629	629	663	693
175/70 R14	925	975	1025	786	786	829	871
185/70 R14	1045	1100	1155	888	888	935	982
195/70 R14	1155	1220	1280	982	982	1037	1088
155/70 R15	770	810	850	655	655	689	723
175/70 R15	990	1040	1090	842	842	884	927
185/70 R15	1100	1155	1210	935	935	982	1029
5.60–13	725	810	880	616	616	689	748
5.20–14	695	785	855	591	591	667	727
165–15	915	1,015	1,105	779	779	863	939
185/60 R 13	845	915	980	719	719	778	833

(i)–(l) [Reserved]

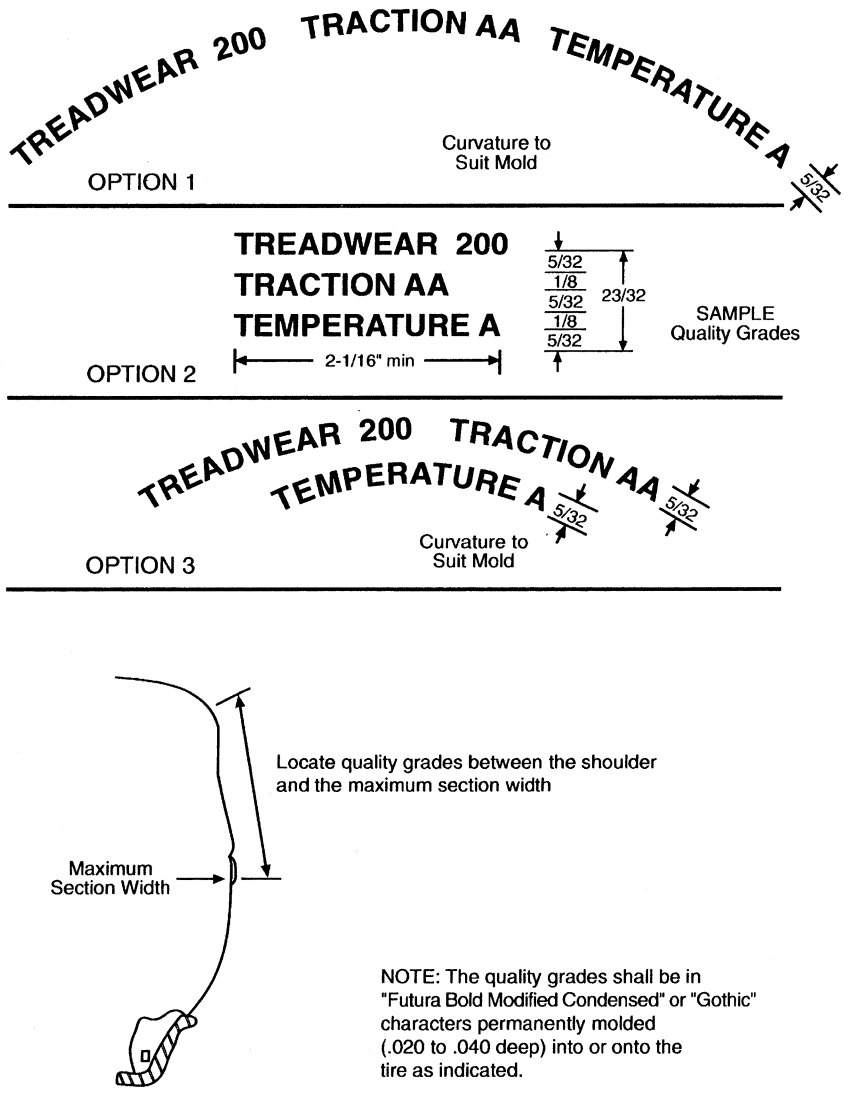

Figure 1

FIGURE 2—[PART I]—DOT QUALITY GRADES

TREADWEAR

TRACTION AA A B C

TEMPERATURE A B C

(Part II) All Passenger Car Tires Must Conform to Federal Safety Requirements in Addition to These Grades

TREADWEAR

The treadwear grade is a comparative rating based on the wear rate of the tire when tested under controlled conditions on a specified government test course. For example, a tire graded 150 would wear one and one-half (1½) times as well on the government course as a tire graded 100. The relative performance of tires depends upon the actual conditions of their use, however, and may depart significantly from the norm due to variations in driving habits, service practices and differences in road characteristics and climate.

TRACTION

The traction grades, from highest to lowest, are AA, A, B, and C. Those grades represent the tire's ability to stop on wet pavement as measured under controlled conditions on specified government test surfaces of asphalt and concrete. A tire marked C may have poor traction performance. Warning: The traction grade assigned to this tire is based on straight-ahead braking traction tests, and does not include acceleration, cornering, hydroplaning, or peak traction characteristics.

TEMPERATURE

The temperature grades are A (the highest), B, and C, representing the tire's resistance to the generation of heat and its ability to dissipate heat when tested under controlled conditions on a specified indoor laboratory test wheel. Sustained high temperature can cause the material of the tire to degenerate and reduce tire life, and excessive temperature can lead to sudden tire failure. The grade C corresponds to a level of performance which all passenger car tires must meet under the Federal Motor Safety Standard No. 109. Grades B and A represent higher levels of performance on the laboratory test wheel than the minimum required by law. Warning: The temperature grade for this tire is established for a tire that is properly inflated and not overloaded. Excessive speed, underinflation, or excessive loading, either separately or in combination, can cause heat buildup and possible tire failure.

APPENDIX A—TREADWEAR TEST COURSE AND DRIVING PROCEDURES

Introduction. The test course consists of three loops of a total of 400 miles in the geographical vicinity of Goodfellow AFB, San Angelo, Tex.

The first loop runs south 143 miles through the cities of Eldorado, Sonora, and Juno, Tex. to the Camp Hudson Historical Marker, and returns by the same route.

The second loop runs east over Farm and Ranch Roads (FM) and returns to its starting point.

The third loop runs northwest to Water Valley, northeast toward Robert Lee and returns via Texas 208 to the vicinity of Goodfellow AFB.

Route. The route is shown in Figure 3. The table identifies key points by number. These numbers are encircled in Figure 3 and in parentheses in the descriptive material that follows.

Southern Loop. The course begins at the intersection (1) of Ft. McKavitt Road and Paint Rock Road (FM388) at the northwest corner of Goodfellow AFB. Drive east via FM 388 to junction with Loop Road 306 (2). Turn right onto Loop Road 306 and proceed south to junction with US277 (3). Turn onto US277 and proceed south through Eldorado and Sonora (4), continuing on US277 to junction with FM189 (5). Turn right onto FM189 and proceed to junction with Texas 163 (6). Turn left onto Texas 163, and at the option of the manufacturer:

(A) Proceed south to Camp Hudson Historical Marker and onto the paved shoulder (7). Reverse route to junction of Loop Road 306 and FM 388 (2); or

(B) Proceed south to junction with Frank's Crossing. Reverse route at Frank's Crossing and proceed north on Texas 163 to junction with Highway 189; Reverse route at junction with Highway 189; proceed south on Texas 163 to junction with Frank's Crossing; reverse route at Frank's Crossing and proceed north to junction of Loop Road 306 and FM 388 (2).

Eastern Loop. From junction of Loop Road 306 and FM388 (2), make right turn onto FM388 and drive east to junction with FM2334 (13). Turn right onto FM2334 and proceed south across FM765 (14) to junction of FM2334 and US87 (15). For convoys that originate at Goodfellow AFB, make U-turn and return to junction of FM388 and Loop Road 306 (2) by the same route. For convoys that do not originate at Goodfellow AFB, upon reaching junction of FM2334 and US87 (15), make U-Turn and continue north on FM2334 past the intersection with FM388 to Veribest Cotton Gin, a distance of 1.8 miles beyond the intersection. Make U-turn and return to junction of FM2334 and FM388. Turn right onto FM388, proceed west to junction FM388 and Loop Road 306.

Northwestern Loop. From junction of Loop Road 306 and FM388 (2), make right turn onto Loop Road 306. Proceed onto US277, to junction with FM2105 (8). Turn left onto FM2105 and proceed west to junction with US87 (10). Turn right on US87 and proceed northwest to the junction with FM2034 near the town of Water Valley (11). Turn right onto FM2034 and proceed north to Texas 208 (12). Turn right onto Texas 208 and proceed south to junction with FM2105 (9). Turn left onto FM2105 and proceed east to junction with

US277 (8). Turn right onto US277 and proceed south onto Loop Road 306 to junction with FM388 (2). For convoys that originate at Goodfellow AFB, turn right onto FM388 and proceed to starting point at junction of Ft. McKavitt Road and FM388 (1). For convoys that do not originate at Goodfellow AFB, do not turn right onto FM388 but continue south on Loop Road 306.

Driving instructions. The drivers shall run at posted speed limits throughout the course unless an unsafe condition arises. If such condition arises, the speed should be reduced to the maximum safe operating speed.

Braking Procedures at STOP signs. There are a number of intersections at which stops are required. At each of these intersections a series of signs is placed in a fixed order at follows:

SIGN LEGEND

Highway Intersection 1000 (or 2000) Feet
STOP AHEAD
Junction XXX
Direction Sign (Mereta→)
STOP or YIELD

Procedures. 1. Approach each intersection at posted speed limit.

2. When abreast of the STOP AHEAD sign, apply the brakes so that the vehicle decelerates smoothly to 20 mph when abreast of the direction sign.

3. Come to a complete stop at the STOP sign or behind any vehicle already stopped.

KEY POINTS ALONG TREADWEAR TEST COURSE, APPROX. MILEAGES, AND REMARKS

		Mileages	*Remarks*
1	Ft. McKavitt Road & FM 388	0	
2	FM388 & Loop 306 *	2	STOP
3	Loop 306 & US277 . .	10	
4	Sonora	72	
5	US 277 & FM 189 . . .	88	
6	FM 189 & Texas 163 .	124	
7	Historical Marker . . . (Camp Hudson)	143	U-TURN
4	Sonora	214	
3	Loop 306 & US 277 . .	276	
2	FM 388 & Loop 306 .	283	
13	FM 388 & FM 2334 †	290	STOP
14	FM 2334 & FM 765 . .	292	STOP
15	FM 2334 & US 87 . . .	295	U-TURN
14	FM 2334 & FM 765 . .	298	STOP
13	FM 388 & FM 2334 . .	300	STOP/YIELD/ BLINKING RED LIGHT
2	FM 388 & Loop 306	307	STOP/YIELD/ BLINKING RED LIGHT
8	US 277 & FM 2105 . .	313	
9	FM 2105 & Texas 208	317	STOP
10	FM 2105 & US 87 . . .	320	STOP
11	FM 2034 & US 87 . . .	338	
12	FM 2034 & Texas 208	362	YIELD
9	FM 2105 & Texas 208	387	
8	FM 2105 & US 277 . .	391	YIELD/STOP
2	FM 388 & Loop 306 *	398	
1	Ft. McKavitt Road & FM 388	400	
16	Veribest Cotton Gin .	1.8	U-TURN

* Convoys not originating at Goodfellow AFB will not traverse the leg of course.

† Convoys not originating at Goodfellow AFB will proceed to 16, Veribest Cotton Gin, Make U-Turn and return to 13.

FIGURE 2

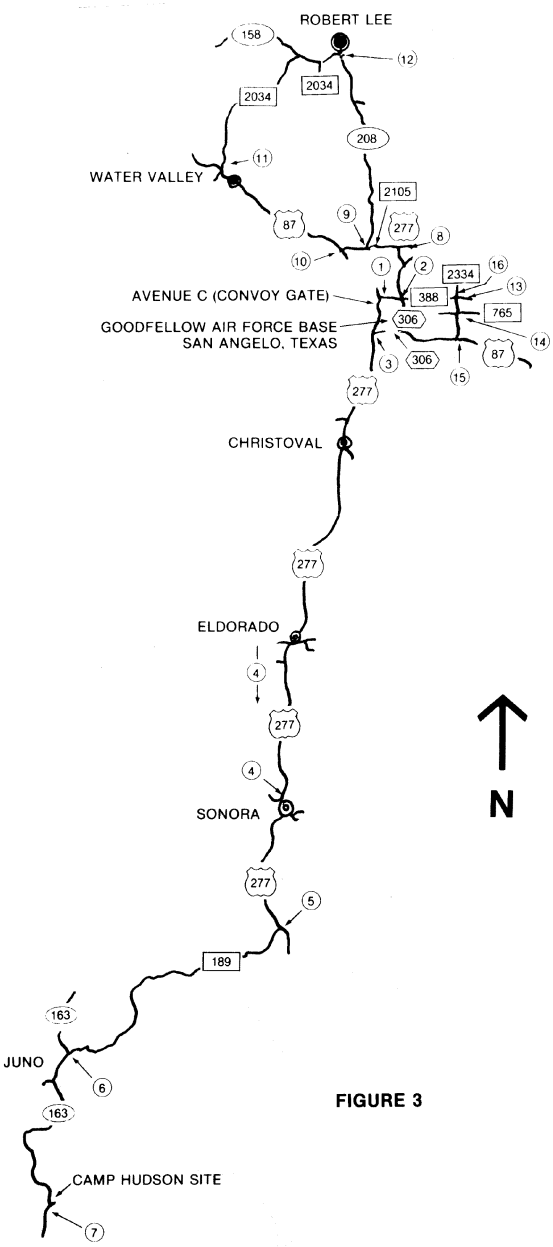

FIGURE 3

APPENDIX B—TRACTION SKID PADS

Two skid pads have been laid on an unused runway and taxi strip on Goodfellow AFB. Their location is shown in Figure 4.

The asphalt skid pad is 600 ft.×60 ft. and is shown in black on the runway in Figure 4. The pad is approached from either end by a

75 ft. ramp followed by 100 ft. of level pavement. This arrangement permits the skid trailers to stabilize before reaching the test area. The approaches are shown on the figure by the hash-marked area.

The concrete pad is 600 ft.×48 ft. and is on the taxi strip. The approaches to the concrete pad are of the same design as those for the asphalt pads.

A two lane asphalt road has been built to connect the runway and taxi strip. The road is parallel to the northeast-southwest runway at a distance of 100 ft. The curves have super-elevation to permit safe exit from the runway at operating speeds.

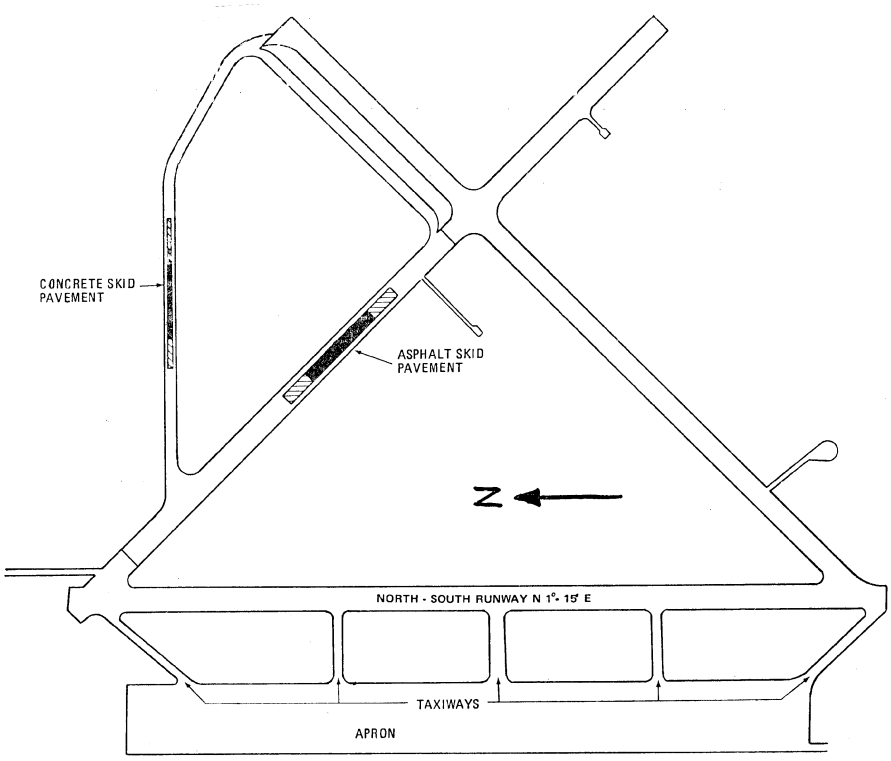

FIGURE 4

APPENDIX C—METHOD OF LEAST SQUARES

The method of least squares is a method of calculation by which it is possible to obtain a reliable estimate of a true physical relationship from a set of data which involve random error. The method may be used to establish a regression line that minimizes the sum of the squares of the deviations of the measured data points from the line. The regression line is consequently described as the line of ''best fit'' to the data points. It is described in terms of its slope and its ''y'' intercept.

The graph in Figure 5 depicts a regression line calculated using the least squares method from data collected from a hypothetical treadwear test of 6,400 miles, with tread depth measurements made at every 500 miles.

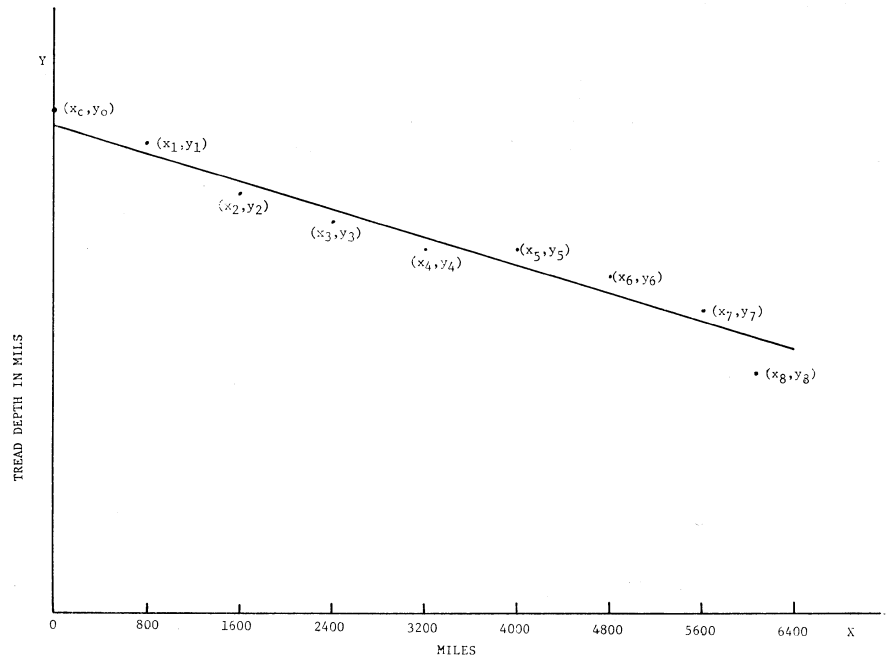

FIGURE 5

In this graph, x_j, y_j $_{(j=0,\ 1,\ \ldots\ \geq\ 8)}$ are the individual data points representing the tread depth measurements (the overall average for the tire with 6 measurements in each tire groove) at the beginning of the test (after break-in) and at the end of each 800-mile segment of the test.

The absolute value of the slope of the regression line is an expression of the mils of tread worn per 1,000 miles, and is calculated by the following formula:

$$b = 1000\,\frac{\left(\sum_{j=0}^{8} X_j Y_j - \frac{1}{9}\sum_{j=0}^{8} X_j \sum_{j=0}^{8} Y_j\right)}{\sum_{j=0}^{8} X_j^{\,2} - \frac{1}{9}\left(\sum_{j=0}^{8} X_j\right)^2}$$

The "*y*" intercept of the regression line (a) in mils is calculated by the following formula:

$$a = \frac{1}{9}\sum_{j=0}^{8} Y_j - \frac{b}{9000}\sum_{j=0}^{8} X_j$$

APPENDIX D—USER FEES

1. *Course Monitoring Tires:* A fee of $333.00 will be assessed for each course monitoring tire purchased from NHTSA at Goodfellow Air Force Base, San Angelo, Texas. This fee is based upon the direct and indirect costs attributable to: (a) the purchase of course monitoring tires by NHTSA, (b) a pro rata allocation of salaries and general facility costs associated with maintenance of the tires, and (c) warehouse storage fees for the tires.

2. *Use of Government Traction Skid Pads:* A fee of $34.00 will be assessed for each hour, or fraction thereof, that the traction skid pads at Goodfellow Air Force Base, San Angelo, Texas are used. This fee is based upon the direct and indirect costs attributable to: (a) depreciation on facilities and equipment comprising or used in conjunction with the traction skid pads (i.e., skid system, water truck, air compressor, skid track, tractor sweeper, equipment, buildings), (b) the calibration of the traction skid pads, and (c) a pro rata allocation of salaries and general facility costs associated with maintenance of the traction skid pads.

3. Fee payments shall be by check, draft, money order, or Electronic Funds Transfer

System made payable to the Treasurer of the United States.

4. The fees set forth in this appendix continue in effect until adjusted by the Administrator of NHTSA. The Administrator reviews the fees set forth in this appendix and, if appropriate, adjusts them by rule at least every 2 years.

[43 FR 30549, July 17, 1978]

EDITORIAL NOTE: For FEDERAL REGISTER citations affecting § 575.104, see the List of CFR Sections Affected, which appears in the Finding Aids section of the printed volume and on GPO Access.

§ 575.105 Vehicle rollover.

(a) *Purpose and scope.* This section requires manufacturers of utility vehicles to alert the drivers of those vehicles that they have a higher possibility of rollover than other vehicle types and to advise them of steps that can be taken to reduce the possibility of rollover and/or to reduce the likelihood of injury in a rollover.

(b) *Application.* This section applies to utility vehicles.

(c) *Definitions.*

Utility vehicles means multipurpose passenger vehicles (other than those which are passenger car derivatives) which have a wheelbase of 110 inches or less and special features for occasional off-road operation.

(d) *Required information*—(1) *Rollover Warning Label.* (i) Except as provided in paragraph (d)(2) of this section, each vehicle must have a label permanently affixed to either side of the sun visor, at the manufacturer's option, at the driver's seating position. The label must conform in content, form and sequence to the label shown in Figure 1 of this section, and must comply with the following requirements:

(A) The heading area must be yellow, with the text and the alert symbol in black.

(B) The message area must be white with black text.

(C) The pictograms must be black with a white background.

(D) The label must be appropriately sized so that it is legible, visible and prominent to the driver.

(ii) *Vehicles manufactured on or after September 1, 1999 and before September 1, 2000.* When the rollover warning label required by paragraph (d)(1)(i) of this section and the air bag warning label required by paragraph S4.5.1(b) of 49 CFR 571.208 are affixed to the same side of the driver side sun visor, either:

(A) The rollover warning label must be affixed to the right (as viewed from the driver's seat) of the air bag warning label and the labels may not be contiguous; or

(B) The pictogram of the air bag warning label must be separated from the pictograms of the rollover warning label by text, and

(*1*) The labels must be located such that the shortest distance from any of the lettering or graphics on the rollover warning label to any of the lettering or graphics on the air bag warning label is not less than 3 cm, or

(*2*) If the rollover warning and air bag warning labels are each completely surrounded by a continuous solid-lined border, the shortest distance from the border of the rollover warning label to the border of the air bag warning label is not less than 1 cm.

(iii) The manufacturer must select the option to which a vehicle is certified by the time the manufacturer certifies the vehicle and may not thereafter select a different option for that vehicle. If a manufacturer chooses to certify compliance with more than one compliance option, the vehicle must satisfy the requirements applicable to each of the options selected.

(iv) *Vehicles manufactured on or after September 1, 2000.* When the rollover warning label required by paragraph (d)(1)(i) of this section and the air bag warning label required by paragraph S4.5.1(b) of 49 CFR 571.208 are affixed to the same side of the driver side sun visor the pictogram of the air bag warning label must be separated from the pictograms of the rollover warning label by text and:

(A) The labels must be located such that the shortest distance from any of the lettering or graphics on the rollover warning label to any of the lettering or graphics on the air bag warning label is not less than 3 cm, or

(B) If the rollover warning and air bag warning labels are each completely surrounded by a continuous solid-lined border, the shortest distance from the border of the rollover warning label to the border of the air bag warning label must be not less than 1 cm.

(2) *Alternate location for warning label.* As an alternative to affixing the warning label required by paragraph (d)(1)(i) of this section to the driver's sun visor, a manufacturer may permanently affix the label to the lower rear corner of the forwardmost driver's side window. The label must be legible, visible and prominent to a person next to the exterior of the driver's door.

(3) *Rollover Alert Label.* If the label required by paragraph (d)(1) of this section and affixed to the driver side sun visor is not visible when the sun visor is in the stowed position, an alert label must be permanently affixed to that visor so that the label is visible when the visor is in that position. The alert label must comply with the following requirements:

(i) The label must read:

ROLLOVER WARNING

Flip Visor Over

(ii) The label must be black with yellow text.

(iii) The label must be no less than 20 square cm.

(4) *Owner's Manual.* The owner's manual must include the following statements and discussions:

(i) The statement ''Utility vehicles have a significantly higher rollover rate than other types of vehicles.''

(ii) A discussion of the vehicle design features which cause this type of vehicles to be more likely to rollover (e.g., higher center of gravity);

(iii) A discussion of the driving practices that can reduce the risk of a rollover (e.g., avoiding sharp turns at excessive speed); and

(iv) The statement: ''In a rollover crash, an unbelted person is significantly more likely to die than a person wearing a seat belt.''

(5) *Combined Rollover and Air Bag Alert Warning.* If the warnings required by paragraph (d)(1) of this section and paragraph S4.5.1(b) of 49 CFR 571.208 to be affixed to the driver side sun visor are not visible when the sun visor is in the stowed position, a combined rollover and air bag alert label may be permanently affixed to that visor in lieu of the alert labels required by paragraph (d)(3) of this section and paragraph S4.5.1(c)(2) of 49 CFR 571.208. The combined rollover and air bag alert label must be visible when the visor is in the stowed position. The combined rollover and air bag alert warning must conform in content to the label shown in Figure 2 of this section, and must comply with the following requirements:

(i) The label must read:

AIR BAG AND ROLLOVER WARNINGS
Flip Visor Over

(ii) The message area must be black with yellow text. The message area must be no less than 20 square cm.

(iii) The pictogram shall be black with a red circle and slash on a white background. The pictogram must be not less than 20 mm in diameter.

(6) At the option of the manufacturer, the requirements in paragraph (d)(1)(i) for labels that are permanently affixed to specified parts of the vehicle may instead be met by permanent marking and molding of the required information.

BLACK TEXT ON YELLOW BACKGROUND

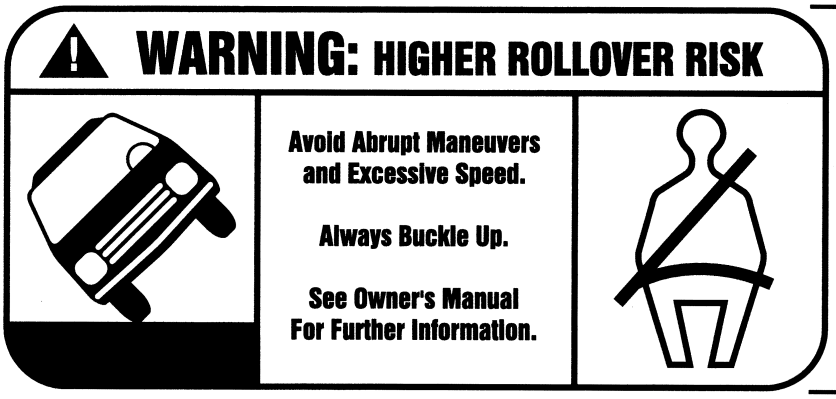

ARTWORK AND REMAINING TEXT IN BLACK AND WHITE

FIGURE 1

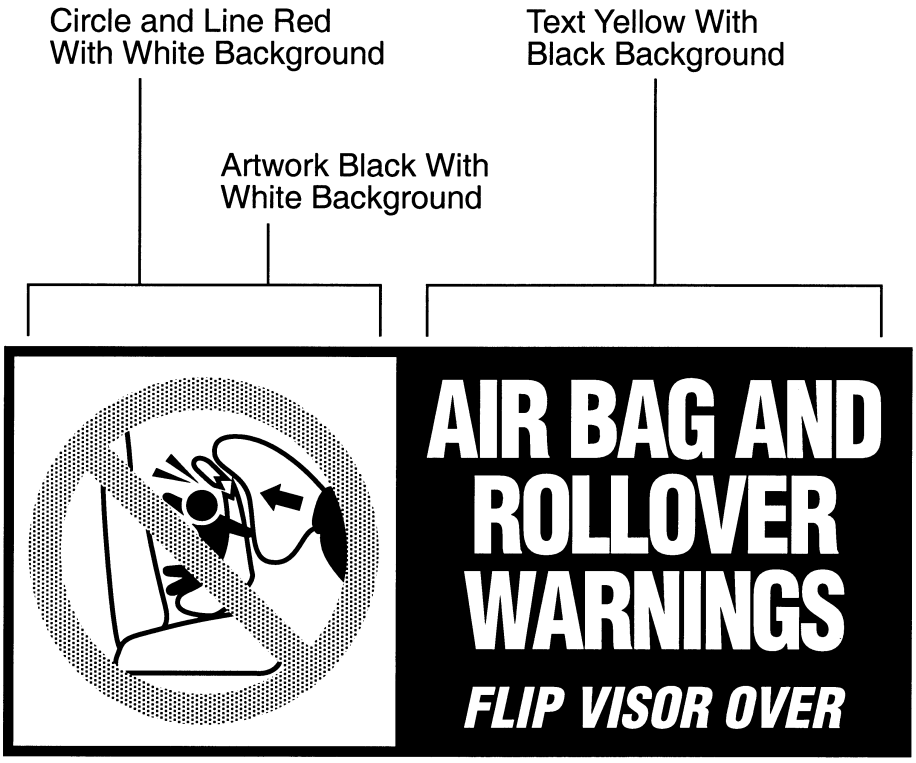

Figure 2. Sun Visor Label Visible When Visor is in Up Position.

[64 FR 11733, Mar. 9, 1999, as amended at 64 FR 47123, Aug. 30, 1999]

§575.106 Tire fuel efficiency consumer information program.

(a) *Scope.* This section requires tire manufacturers, tire brand name owners, and tire retailers to provide information indicating the relative performance of replacement passenger car tires in the areas of fuel efficiency, safety, and durability.

(b) *Purpose.* The purpose of this section is to aid consumers in making better educated choices in the purchase of passenger car tires.

(c) *Application.* This section applies to replacement passenger car tires. However, this section does not apply to light truck tires, deep tread, winter-type snow tires, space-saver or temporary use spare tires, tires with nominal rim diameters of 12 inches or less, or to limited production tires as defined in §575.104(c)(2). Tire manufacturers may comply with the requirements in this §575.106 as an alternative to complying with the requirements in §575.104(d)(1)(i)(A) and (B).

(d) *Definitions.*—(1) All terms used in this section that are defined in Section 32101 of Title 49, United States Code, are used as defined therein.

(2) As used in this section:

Brand name owner means a person, other than a tire manufacturer, who owns or has the right to control the brand name of a tire or a person who licenses another to purchase tires from a tire manufacturer bearing the licensor's brand name.

CT means a pneumatic tire with an inverted flange tire and rim system in which the rim is designed with rim

flanges pointed radially inward and the tire is designed to fit on the underside of the rim in a manner that encloses the rim flanges inside the air cavity of the tire.

Dealer means a person selling and distributing new motor vehicles or motor vehicle equipment primarily to purchasers that in good faith purchase the vehicle or equipment other than for resale.

Distributor means a person primarily selling and distributing motor vehicles or motor vehicle equipment for resale.

Lab alignment tires or *LATs* means the reference tires which the reference lab will test to be used to align other rolling resistance machines with the reference lab in accordance with the machine alignment procedure in ISO 28580 (incorporated by reference, *see* § 575.3), section 10.

Light truck (LT) tire means a tire designated by its manufacturer as primarily intended for use on lightweight trucks or multipurpose passenger vehicles.

Passenger car tire means a tire intended for use on passenger cars, multipurpose passenger vehicles, and trucks, that have a gross vehicle weight rating (GVWR) of 10,000 pounds or less.

Reference lab means the laboratory or laboratories that the National Highway Traffic Safety Administration designates and which maintains and operates a rolling resistance test machine to test LATs for rolling resistance so that other testing laboratories may correlate the results from its rolling resistance test machine in accordance with the machine alignment procedure in ISO 28580 (incorporated by reference, *see* § 575.3), section 10.

Replacement passenger car tire means any passenger car tire other than a passenger car tire sold as original equipment on a new vehicle.

Size designation means the alpha-numeric designation assigned by a manufacturer that identifies a tire's size. This can include identifications of tire class, nominal width, aspect ratio, tire construction, and wheel diameter.

Stock keeping unit or *SKU* means the alpha-numeric designation assigned by a manufacturer to uniquely identify a tire product. This term is sometimes referred to as a product code, a product identifier, or a part number.

Tire line or *tire model* means the entire name used by a tire manufacturer to designate a tire product, including all prefixes and suffixes as they appear on the sidewall of a tire.

Tire retailer means a dealer or distributor of new replacement passenger car tires sold for use on passenger cars, multipurpose passenger vehicles, and trucks, that have a gross vehicle weight rating (GVWR) of 10,000 pounds or less.

(e) *Requirements.*—(1) *Information.* (i) *Requirements for tire manufacturers.* Subject to paragraph (e)(1)(iii) of this section, each manufacturer of tires, or in the case of tires marketed under a brand name, each brand name owner shall provide rating information for each tire of which it is the manufacturer or brand name owner in the manner set forth in paragraphs (e)(1)(i)(A) through (C) of this section. The ratings for each tire shall be only those specified in paragraph (e)(2) of this section. For the purposes of this section, each tire of a different SKU is to be rated separately. Each tire shall be able to achieve the level of performance represented by each rating.

(A) *Ratings.* Each tire shall be rated with the words, letters, symbols, and figures specified in paragraph (e)(2) of this section.

(B) *Tire label.* [Reserved]

(C) *Reporting requirements.* The information collection requirements contained in this section have been approved by the Office of Management and Budget under the provisions of the Paperwork Reduction Act (44 U.S.C. 3501 *et seq.*) and are awaiting an assigned OMB Control Number.

(*1*) Subject to paragraph (e)(1)(iii) of this section, manufacturers of tires or, in the case of tires marketed under a brand name, brand name owners of tires subject to this section shall submit to NHTSA electronically, either directly or through an agent, the following data for each rated replacement passenger car tire:

(*i*) Rolling resistance rating, as determined in paragraph (e)(2)(i) of this section.

(*ii*) Wet traction rating, as determined in paragraph (e)(2)(ii) of this section.

(*iii*) Treadwear rating, as determined in paragraph (e)(2)(iii) of this section.

(*2*) *Format of data submitted*. The information required under paragraph (e)(1)(i)(C)(*1*) of this section shall be submitted to NHTSA as extra columns in the electronic data submission required under section 26 of Part 579.

(*3*) *Exempted tires*. Manufacturers of tires or, in the case of tires marketed under a brand name, brand name owners of tires subject to this section shall submit to NHTSA all tire lines, size designations, and stock keeping units it manufactures which are exempted from this section (§575.106) as determined under paragraph (c) of this section. Where a manufacturer is required to report ratings under this section, the information required in this paragraph may be submitted with the ratings information reported in accordance with paragraph (e)(1)(i)(C)(*1*) of this section. Where a manufacturer of tires, or in the case of tires marketed under a brand name, brand name owners of tires only manufactures tires that are exempt from this section under paragraph (c) of this section, that manufacturer shall submit a one-time statement listing the tire lines, size designations, and stock keeping units it manufactures, and certifying that none of the tires it manufactures are required to be rated under this section.

(*4*) *New ratings information*. Whenever the tire manufacturer, or in the case of tires marketed under a brand name, the brand name owner receives information that would determine new or different information required under paragraph (e)(1)(i)(C)(*1*) of this section for a tire, the tire manufacturer or brand name owner shall submit the new ratings information to NHTSA on or before the date 30 calendar days after receipt by the manufacturer or brand name owner of the new information, whichever comes first.

(*5*) *Voluntary submission of data*. Manufacturers of tires or, in the case of tires marketed under a brand name, brand name owners of tires not subject to this section may submit to NHTSA data meeting the requirements of paragraphs (e)(1) and (2) of this section for any tire they wish to have included in the database of information available to consumers on NHTSA's Web site.

(ii) *Requirements for tire retailers*. Subject to paragraph (e)(1)(iii) of this section, each tire retailer shall provide rating information for each passenger car tire offered for sale in the manner set forth in this section.

(iii) *Date for compliance*. The requirements of paragraphs (e)(1)(i) and (e)(1)(ii) of this section will be implemented as indicated in a forthcoming final rule. These dates will be announced in the FEDERAL REGISTER.

(2) *Performance*.—(i) *Fuel efficiency*. [Reserved]

(ii) *Traction*. [Reserved]

(iii) *Treadwear*. [Reserved]

(f) *Fuel efficiency rating conditions and procedures*.—(1) *Conditions*. (i) Measurement of rolling resistance force under the test procedure specified in paragraph (f)(2) of this section shall be made using either the force or the torque method.

(ii) The test procedure specified in paragraph (f)(2) of this section shall be carried out on an 80-grit roadwheel surface.

(iii) The machine alignment procedure specified in section 10 of the test procedure specified in paragraph (f)(2) of this section shall be conducted using pairs of the LATs specified in paragraph (f)(1)(iv) of this section, and tested by the reference lab.

(iv) *Lab alignment tires*. The LATs to be used in the machine alignment procedure in section 10 of the test procedure specified in paragraph (f)(2) of this section will be specified in this section in a forthcoming final rule.

(v) *Break-in procedure for bias ply tires*. Before starting the rolling resistance testing under the test procedure specified in paragraph (f)(2) of this section on a bias ply replacement passenger car tire, the tire shall be broken in by running it for one (1) hour with the speed, loading, and inflation pressure as specified in paragraphs (f)(1)(v)(A), (f)(1)(v)(B), and (f)(1)(v)(C) of this section. After the one hour break-in, allow the tire to cool for two (2) hours and re-adjust to the required ISO 28580 (incorporated by reference, *see* §575.3) test

inflation pressure, and verify 10 minutes after the adjustment is made. After break-in, the bias ply tire should follow the 30 minute warm-up procedure of ISO 28580 (incorporated by reference, *see* § 575.3).

(A) *Speed*. The speed shall be 80 kilometer per hour (kph).

(B) *Loading*. The tire loading shall be 80 percent of the maximum tire load capacity.

(C) *Inflation pressure*. The inflation pressure shall be 210 kilopascals (kPa) for standard load tires, or 250 kPA for reinforced or extra load tires.

(2) *Procedure*. The test procedure shall be as specified in ISO 28580 (incorporated by reference, *see* § 575.3), except that the conditions specified in paragraph (f)(1) of this section shall be used.

(g) *Traction rating conditions and procedures*. (1) *Conditions*. Test conditions are as specified in § 575.104(f)(1), subject to the changes in paragraphs (g)(1)(i) through (g)(1)(iii) of this section to additionally measure the peak coefficient of friction.

(i) The sampling rate of the data acquisition is to be no less than 100 Hertz in accordance with Section 6.6.1.8 of ASTM E 1337 (incorporated by reference, *see* § 575.3).

(ii) The rate of brake application shall be sufficient to control the time interval between initial brake application and peak longitudinal force to be between 0.3 and 0.5 seconds, and shall be determined in accordance with Section 6.3.2 of ASTM E 1337 (incorporated by reference, *see* § 575.3).

(iii) The peak coefficient of friction (or peak braking coefficient) shall be determined in accordance with Section 12 of ASTM E 1337 (incorporated by reference, *see* § 575.3) for each dataset.

(iv) The slide coefficient of friction will be determined in accordance with § 575.104(f)(2)(iii).

(2) *Procedure*. (i) Prepare two standard tires as specified in § 575.104(f)(2)(i).

(ii) Mount the tires on the test apparatus described in § 575.104(f)(1)(iv) and load each tire to 1,085 pounds.

(iii) Tow the trailer on the asphalt test surface specified in § 575.104(f)(1)(i) at a speed of 40 mph, lock one trailer wheel, and record the slide and peak coefficient of friction on the tire associated with that wheel.

(iv) Repeat the test on the concrete surface, locking the same wheel.

(v) Repeat the tests specified in paragraphs (g)(2)(iii) and (iv) of this section for a total of 10 measurements on each test surface.

(vi) Repeat the procedures specified in paragraphs (g)(2)(iii) through (v) of this section, locking the wheel associated with the other standard tire.

(vii) Average the 20 measurements taken on the asphalt surface to find the standard tire average peak coefficient of friction for the asphalt surface. Average the 20 measurements taken on the concrete surface to find the standard tire average peak coefficient of friction for the concrete surface. The standard tire average peak coefficient of friction so determined may be used in the computation of adjusted peak coefficients of friction for more than one candidate tire.

(viii) Average the 20 measurements taken on the asphalt surface to find the standard tire average slide coefficient of friction for the asphalt surface. Average the 20 measurements taken on the concrete surface to find the standard tire average slide coefficient of friction for the concrete surface. The standard tire average slide coefficient of friction so determined may be used in the computation of adjusted slide coefficients of friction for more than one candidate tire.

(ix) Prepare two candidate tires of the same SKU in accordance with paragraph (g)(2)(i) of this section, mount them on the test apparatus, and test one of them according to the procedures of paragraphs (g)(2)(ii) through (v) of this section, except load each tire to 85 percent of the test load specified in § 575.104(h). For CT tires, the test inflation of candidate tires shall be 230 kPa. Candidate tire measurements may be taken either before or after the standard tire measurements used to compute the standard tire traction coefficient. Take all standard tire and candidate tire measurements used in computation of a candidate tire's adjusted peak coefficient and adjusted slide coefficient of friction within a single three-hour period. Average the 10 measurements taken on the asphalt

surface to find the candidate tire average peak coefficient and average slide coefficient of friction for the asphalt surface. Average the 10 measurements taken on the concrete surface to find the candidate tire average peak coefficient of friction for the concrete surface. Average the 10 measurements taken on the concrete surface to find the candidate tire average slide coefficient of friction for the concrete surface.

(x) Repeat the procedures specified in paragraph (g)(2)(viii) of this section, using the second candidate tire as the tire being tested.

(h) *Treadwear rating conditions and procedures.*—(1) *Conditions.* Test conditions are as specified in § 575.104(e)(1).

(2) *Procedure.* Test procedure is as specified in § 575.104(e)(2).

[75 FR 15944, Mar. 30, 2010]

Subpart C—Transportation Recall Enhancement, Accountability, and Documentation Act; Consumer Information

§ 575.201 Child restraint performance.

The National Highway Traffic Safety Administration has established a program for rating the performance of child restraints. The agency makes the information developed under this rating program available through a variety of means, including postings on its Web site, *http://www.nhtsa.dot.gov*.

[67 FR 67494, Nov. 5, 2002]

Subpart D—Safe, Accountable, Flexible, Efficient Transportation Equity Act: A Legacy for Users (SAFETEA–LU); Consumer Information

SOURCE: 71 FR 53585, Sept. 12, 2006, unless otherwise noted.

§ 575.301 Vehicle Labeling of Safety Rating Information.

(a) *Purpose and Scope.* The purpose of this section is to aid potential purchasers in the selection of new passenger motor vehicles by providing them with safety rating information developed by NHTSA in its New Car Assessment Program (NCAP) testing. Manufacturers of passenger motor vehicles described in paragraph (b) of this section are required to include this information on the Monroney label. Although NHTSA also makes the information available through means such as postings at *http://www.safercar.gov* and *http://www.nhtsa.dot.gov*, the additional Monroney label information is intended to provide consumers with relevant information at the point of sale.

(b) *Application.* This section applies to automobiles with a GVWR of 10,000 pounds or less, manufactured on or after September 1, 2007, that are required by the Automobile Information Disclosure Act, 15 U.S.C. 1231–1233, to have price sticker labels (Monroney labels), e.g., passenger vehicles, station wagons, passenger vans, and sport utility vehicles.

(c) *Definitions.* (1) *Monroney label* means the label placed on new automobiles with the manufacturer's suggested retail price and other consumer information, as specified at 15 U.S.C. 1231–1233.

(2) *Safety rating label* means the label with NCAP safety rating information, as specified at 15 U.S.C. 1232(g). The safety rating label is part of the Monroney label.

(d) *Required Label.* (1) Except as specified in paragraph (f) of this section, each vehicle must have a safety rating label that is part of its Monroney label, meets the requirements specified in paragraph (e) of this section, and conforms in content, format and sequence to the sample label depicted in Figure 1 of this section. If NHTSA has not provided a safety rating for any category of vehicle performance for a vehicle, the manufacturer may use the smaller label specified in paragraph (f) of this section.

(2) The label must depict the star ratings for that vehicle as reported to the vehicle manufacturer by NHTSA.

(3) Whenever NHTSA informs a manufacturer in writing of a new safety rating for a specified vehicle or the continued applicability of an existing

safety rating for a new model year, including any safety concerns, the manufacturer shall include the new or continued safety rating on vehicles manufactured on or after the date 30 calendar days after receipt by the manufacturer of the information.

(4) If, for a vehicle that has an existing safety rating for a category, NHTSA informs the manufacturer in writing that it has approved an optional NCAP test that will cover that category, the manufacturer may depict vehicles manufactured on or after the date of receipt of the information as ''Not Rated'' or ''To Be Rated'' for that category.

(5) The text ''Frontal Crash,'' ''Side Crash,'' ''Rollover,'' ''Driver,'' ''Passenger,'' ''Front Seat,'' ''Rear Seat'' and where applicable, ''Not Rated'' or ''To Be Rated,'' the star graphic indicating each rating, as well as any text in the header and footer areas of the label, must have a minimum font size of 12 point. All remaining text and symbols on the label (including the star graphic specified in paragraph (e)(8)(i)(A) of this section, must have a minimum font size of 8 point.

(e) *Required Information and Format*—(1) *Safety Rating Label Border*. The safety rating label must be surrounded by a solid dark line that is a minimum of 3 points in width.

(2) *Safety Rating Label Size and Legibility*. The safety rating label must be presented in a legible, visible, and prominent fashion that covers at least 8 percent of the total area of the Monroney label (*i.e.*, including the safety rating label) or an area with a minimum of 4½ inches in length and 3½ inches in height on the Monroney label, whichever is larger.

(3) *Heading Area*. The words ''Government Safety Ratings'' must be in boldface, capital letters that are light in color and centered. The background must be dark.

(4) *Frontal Crash Area*. (i) The frontal crash area must be placed immediately below the heading area and must have dark text and a light background. Both the driver and the right front passenger frontal crash test ratings must be displayed with the maximum star ratings achieved.

(ii) The words ''Frontal Crash'' must be in boldface, cover two lines, and be aligned to the left side of the label.

(iii) The word ''Driver'' must be on the same line as the word ''Frontal'' in ''Frontal Crash,'' and be left justified, horizontally centered and vertically aligned at the top of the label. The achieved star rating for ''Driver'' must be on the same line, left justified, and aligned to the right side of the label.

(iv) If NHTSA has not released the star rating for the ''Driver'' position, the text ''Not Rated'' must be used in boldface. However, as an alternative, the words ''To Be Rated'' (in boldface) may be used if the manufacturer has received written notification from NHTSA that the vehicle has been chosen for NCAP testing. Both texts must be on the same line as the text ''Driver'', left justified, and aligned to the right side of the label.

(v) The word ''Passenger'' must be on the same line as the word ''Crash'' in ''Frontal Crash,'' below the word ''Driver,'' and be left justified, horizontally centered and vertically aligned at the top of the label. The achieved star rating for ''Passenger'' must be on the same line, left justified, and aligned to the right side of the label.

(vi) If NHTSA has not released the star rating for ''Passenger,'' the words ''Not Rated'' must be used in boldface. However, as an alternative, the words ''To Be Rated'' (in boldface) may be used if the manufacturer has received written notification from NHTSA that the vehicle has been chosen for NCAP testing. Both texts must be on the same line as the text ''Passenger'', left justified, and aligned to the right side of the label.

(vii) The words ''Star ratings based on the risk of injury in a frontal impact.'', followed (on the next line) by the statement ''Frontal ratings should ONLY be compared to other vehicles of similar size and weight.'' must be placed at the bottom of the frontal crash area.

(5) *Side Crash Area*. (i) The side crash area must be immediately below the frontal crash area, separated by a dark line that is a minimum of three points in width. The text must be dark against a light background. Both the

driver and the rear seat passenger side crash test rating must be displayed with the maximum star rating achieved.

(ii) The words ''Side Crash'' must cover two lines, and be aligned to the left side of the label in boldface.

(iii) The words ''Front seat'' must be on the same line as the word ''Side'' in ''Side Crash'' and be left justified, horizontally centered and vertically aligned in the middle of the label. The achieved star rating for ''Front seat'' must be on the same line, left justified, and aligned to the right side of the label.

(iv) If NHTSA has not released the star rating for ''Front Seat,'' the words ''Not Rated'' must be used in boldface. However, as an alternative, the words ''To Be Rated'' (in boldface) may be used if the manufacturer has received written notification from NHTSA that the vehicle has been chosen for NCAP testing. Both texts must be on the same line as the text ''Front seat'', left justified, and aligned to the right side of the label.

(v) The words ''Rear seat'' must be on the same line as the word ''Crash'' in ''Side Crash,'' below the word ''Front seat,'' and be left justified, horizontally centered and vertically aligned in the middle of the label. The achieved star rating for ''Rear seat'' must be on the same line, left justified, and aligned to the right side of the label.

(vi) If NHTSA has not released the star rating for ''Rear Seat,'' the text ''Not Rated'' must be used in boldface. However, as an alternative, the text ''To Be Rated'' (in boldface) may be used if the manufacturer has received written notification from NHTSA that the vehicle has been chosen for NCAP testing. Both texts must be on the same line as the text ''Rear seat'', left justified, and aligned to the right side of the label.

(vii) The words: ''Star ratings based on the risk of injury in a side impact.'' must be placed at the bottom of the side crash area.

(6) *Rollover Area*. (i) The rollover area must be immediately below the side crash area, separated by a dark line that is a minimum of three points in width. The text must be dark against a light background. The rollover test rating must be displayed with the maximum star rating achieved.

(ii) The word ''Rollover'' must be aligned to the left side of the label in boldface. The achieved star rating must be on the same line, aligned to the right side of the label.

(iii) If NHTSA has not tested the vehicle, the words ''Not Rated'' must be used in boldface. However, as an alternative, the words ''To Be Rated'' (in boldface) may be used if the manufacturer has received written notification from NHTSA that the vehicle has been chosen for NCAP testing. Both texts must be on the same line as the text ''Rollover'', left justified, and aligned to the right side of the label.

(iv) The words: ''Star ratings based on the risk of rollover in a single vehicle crash.'' must be placed at the bottom of the rollover area.

(7) *Graphics*. The star graphic is depicted in Figure 3 and the safety concern graphic is depicted in Figure 4.

(8) *General Information Area*. (i) The general information area must be immediately below the rollover area, separated by a dark line that is a minimum of three points in width. The text must be dark and the background must be light. The text must state the following, in the specified order, on separate lines:

(A) '' Star ratings range from 1 to 5 stars (★★★★★), with 5 being the highest.'' and

(B) ''Source: National Highway Traffic Safety Administration (NHTSA)''

(9) *Footer Area*. The text ''*www.safercar.gov* or 1–888–327–4236'' must be provided in boldface letters that are light in color, and be centered. The background must be dark.

(10) *Safety Concern*. For vehicle tests for which NHTSA reports a safety concern as part of the star rating, the label must:

(i) Depict, as a superscript to the star rating, the related symbol, as depicted in Figure 4 of this section, at ⅔ the font size of the base star, and

(ii) Include at the bottom of the relevant area (i.e., frontal crash area, side crash area, rollover area), as the last line of that area, the related symbol, as depicted in Figure 4 of this section, as a superscript of the rest of the line, and

the text ''Safety Concern: Visit *www.safercar.gov* or call 1–888–327–4236 for more details.''

(11) No additional information may be provided in the safety rating label area. The specified information provided in a language other than English is not considered to be additional information.

(f) *Smaller Safety Rating Label for Vehicles with No Ratings.* (1) If NHTSA has not released a safety rating for any category for a vehicle, the manufacturer may use a smaller safety rating label that meets paragraphs (f)(2) through (f)(5) of this section. A sample label is depicted in Figure 2.

(2) The label must be at least 4½ inches in width and 1½ inches in height, and must be surrounded by a solid dark line that is a minimum of 3 points in width.

(3) *Heading Area.* The text must read ''Government Safety Ratings'' and be in 14-point boldface, capital letters that are light in color, and be centered. The background must be dark.

(4) *General Information.* The general information area must be below the header area. The text must be dark and the background must be light. The text must state the following, in at least 12-point font, be left-justified, and aligned to the left side of the label, in the specified order:

(i) ''This vehicle has not been rated by the government for frontal crash, side crash, or rollover risk.''

(ii) ''Source: National Highway Traffic Safety Administration (NHTSA).''

(5) *Footer Area.* The text ''*www.safercar.gov* or 1–888–327–4236'' must be provided in 14-point boldface letters that are light in color, and be centered.The background must be dark.

(6) No additional information may be provided in the smaller safety rating label area. The specified information provided in a language other than English is not considered to be additional information.

(g) *Labels for alterers.* (1) If, pursuant to 49 CFR 567.7, a person is required to affix a certification label to a vehicle, and the vehicle has a safety rating label with one or more safety ratings, the alterer must also place another label on that vehicle as specified in this paragraph.

(2) The additional label (which does not replace the one required by 49 CFR 567.7) must read: ''This vehicle has been altered. The stated star ratings on the safety rating label may no longer be applicable.''

(3) The label must be placed adjacent to the Monroney label or as close to it as physically possible.

Figure 1 to Sec. 575.301
Sample Label for a Vehicle with At Least One NCAP Rating

Figure 2 to Sec. 575.301
Sample Label for a Vehicle with No NCAP Ratings

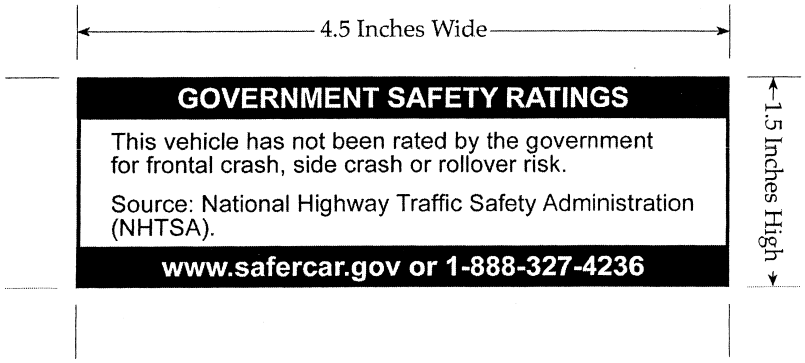

Figure 3 to Sec. 575.301
Sample Star Rating Graphic for Sec. 575.301

Figure 4 to Sec. 575.301
Sample Safety Concern Graphic for Sec. 575.301

[71 FR 53585, Sept. 12, 2006, as amended at 72 FR 45176, Aug. 13, 2007]

PART 576—RECORD RETENTION

Sec.
576.1 Scope.
576.2 Purpose.
576.3 Application.
576.4 Definitions.
576.5 Basic requirements.
576.6 Records.
576.7 Retention.
576.8 Malfunctions covered.

AUTHORITY: 49 U.S.C. 322(a), 30117, 30120(g), 30141–30147; delegation of authority at 49 CFR 1.50.

SOURCE: 39 FR 30045, Aug. 20, 1974, unless otherwise noted.

EDITORIAL NOTE: For an interpretation document regarding part 576, see 40 FR 3296, Jan. 21, 1975.

§ 576.1 Scope.

This part establishes requirements for the retention by manufacturers of motor vehicles and of motor vehicle equipment, of claims, complaints, reports, and other records concerning alleged and proven motor vehicle or motor vehicle equipment defects and malfunctions that may be related to motor vehicle safety.

[67 FR 45872, July 10, 2002]

§ 576.2 Purpose.

The purpose of this part is to preserve records that are needed for the proper investigation, and adjudication or other disposition, of possible defects related to motor vehicle safety and instances of nonconformity to the motor vehicle safety standards and associated regulations.

§ 576.3 Application.

This part applies to all manufacturers of motor vehicles, with respect to all records generated or acquired on or after August 16, 1969, and to all manufacturers of motor vehicle equipment, with respect to all records in their possession, generated or acquired on or after August 9, 2002.

[67 FR 45873, July 10, 2002]

§ 576.4 Definitions.

All terms in this part that are defined in 49 U.S.C. 30102 and part 579 of this chapter are used as defined therein.

[67 FR 45873, July 10, 2002]

§576.5 Basic requirements.

(a) Each manufacturer of motor vehicles, child restraint systems, and tires shall retain, as specified in §576.7 of this part, all records described in §576.6 of this part for a period of five calendar years from the date on which they were generated or acquired by the manufacturer.

(b) Each manufacturer of motor vehicles and motor vehicle equipment shall retain, as specified in §576.7 of this part, all the underlying records on which the information reported under part 579 of this chapter is based, for a period of five calendar years from the date on which they were generated or acquired by the manufacturer, except as provided in paragraph (c) of this section.

(c) Manufacturers need not retain copies of documents transmitted to NHTSA pursuant to parts 573, 577, and 579 of this chapter.

[67 FR 45873, July 10, 2002]

§576.6 Records.

Records to be maintained by manufacturers under this part include all documentary materials, films, tapes, and other information-storing media that contain information concerning malfunctions that may be related to motor vehicle safety. Such records include, but are not limited to, reports and other documents, including material generated or communicated by computer, telefax or other electronic means, that are related to work performed under warranties; and any lists, compilations, analyses, or discussions of such malfunctions contained in internal or external correspondence of the manufacturer, including communications transmitted electronically.

[67 FR 45873, July 10, 2002]

§576.7 Retention.

Duplicate copies need not be retained. Information may be reproduced or transferred from one storage medium to another (e.g., from paper files to microfilm) as long as no information is lost in the reproduction or transfer, and when so reproduced or transferred the original form may be treated as a duplicate.

§576.8 Malfunctions covered.

For purposes of this part, ''malfunctions that may be related to motor vehicle safety'' shall include, with respect to a motor vehicle or item of motor vehicle equipment, any failure or malfunction beyond normal deterioration in use, or any failure of performance, or any flaw or unintended deviation from design specifications, that could in any reasonably foreseeable manner be a causative factor in, or aggravate, an accident or an injury to a person.

PART 577—DEFECT AND NONCOMPLIANCE NOTIFICATION

Sec.

577.1 Scope.
577.2 Purpose.
577.3 Application.
577.4 Definitions.
577.5 Notification pursuant to a manufacturer's decision.
577.6 Notification pursuant to Administrator's decision.
577.7 Time and manner of notification.
577.8 Disclaimers.
577.9 Conformity to statutory requirements.
577.10 Follow-up notification.
577.11 Reimbursement notification.
577.12 Notification pursuant to an accelerated remedy program.
577.13 Notification to dealers and distributors.

AUTHORITY: 49 U.S.C. 30102, 30103, 30116–30121, 30166; delegations of authority at 49 CFR 1.50 and 49 CFR 501.8.

SOURCE: 41 FR 56816, Dec. 30, 1976, unless otherwise noted.

§577.1 Scope.

This part sets forth requirements for manufacturer notification to owners, dealers, and distributors of motor vehicles and items of replacement equipment about a defect that relates to motor vehicle safety or a noncompliance with a Federal motor vehicle safety standard.

[69 FR 34959, June 23, 2004]

§577.2 Purpose.

The purpose of this part is to ensure that notifications of defects or noncompliances adequately inform and effectively motivate owners of potentially defective or noncomplying motor

vehicles or items of replacement equipment to have such vehicles or equipment inspected and, where necessary, remedied as quickly as possible. It is also to ensure that dealers and distributors of motor vehicles and items of replacement equipment are made aware of the existence of defects and noncompliances and of their rights and responsibilities with regard thereto.

[41 FR 56816, Dec. 30, 1976, as amended at 69 FR 34959, June 23, 2004]

§ 577.3 Application.

This part applies to manufacturers of complete motor vehicles, incomplete motor vehicles, and replacement equipment. In the case of vehicles manufactured in two or more stages, compliance by either the manufacturer of the incomplete vehicle, any subsequent manufacturer, or the manufacturer of affected replacement equipment, shall be considered compliance by each of those manufacturers.

§ 577.4 Definitions.

For the purposes of this part:

Act means 49 U.S.C. Chapter 30101–30169.

Administrator means the Administrator of the National Highway Traffic Safety Administration or his delegate.

First purchaser means the first purchaser in good faith for a purpose other than resale.

Leased motor vehicle means any motor vehicle that is leased to a person for a term of at least four months by a lessor who has leased five or more vehicles in the twelve months preceding the date of notification by the vehicle manufacturer of the existence of a safety-related defect or noncompliance with a Federal motor vehicle safety standard in the motor vehicle.

Lessee means a person who is the lessee of a leased motor vehicle as defined in this section.

Lessor means a person or entity that is the owner, as reflected on the vehicle's title, of any five or more leased vehicles (as defined in this section), as of the date of notification by the manufacturer of the existence of a safety-related defect or noncompliance with a Federal motor vehicle safety standard in one or more of the leased motor vehicles.

Owners includes purchaser.

[41 FR 56816, Dec. 30, 1976, as amended at 60 FR 17270, Apr. 5, 1995]

§ 577.5 Notification pursuant to a manufacturer's decision.

(a) When a manufacturer of motor vehicles or replacement equipment determines that any motor vehicle or item of replacement equipment produced by the manufacturer contains a defect that relates to motor vehicle safety, or fails to conform to an applicable Federal motor vehicle safety standard, the manufacturer shall provide notification in accordance with paragraph (a) of § 577.7, unless the manufacturer is exempted by the Administrator (pursuant to 49 U.S.C. 30118(d) or 30120(h)) from giving such notification. The notification shall contain the information specified in this section. The information required by paragraphs (b) and (c) of this section shall be presented in the form and order specified. The information required by paragraphs (d) through (h) of this section may be presented in any order. Except as authorized by the Administrator, the manufacturer shall submit a copy of its proposed owner notification letter, including any provisions or attachments related to reimbursement, to NHTSA's Recall Management Division (NVS–215) no fewer than five Federal Government business days before it intends to begin mailing it to owners. The manufacturer shall mark the outside of each envelope in which it sends an owner notification letter with a notation that includes the words ''SAFETY,'' ''RECALL,'' and ''NOTICE,'' all in capital letters and in type that is larger than that used in the address section, and is also distinguishable from the other type in a manner other than size. Except where the format of the envelope has been previously approved by NHTSA's Recall Management Division (NVS–215), each manufacturer must submit the envelope format it intends to use to that division at least five Federal Government business days before mailing the notification to owners. Submission of envelopes and proposed owner notification letters shall be made by any means, including those means identified in 49 CFR 573.9, that

permits the manufacturer to verify receipt promptly by the Recall Management Division and the date it was received by that division. Notification sent to an owner whose address is in either the Commonwealth of Puerto Rico or the Canal Zone shall be written in both English and Spanish.

(b) An opening statement: ''This notice is sent to you in accordance with the requirements of the National Traffic and Motor Vehicle Safety Act.''

(c) Whichever of the following statements is appropriate:

(1) ''(Manufacturer's name or division) has decided that a defect which relates to motor vehicle safety exists in (identified motor vehicles, in the case of notification sent by a motor vehicle manufacturer; identified replacement equipment, in the case of notification sent by a replacement equipment manufacturer);'' or

(2) ''(Manufacturer's name or division) has decided that (identified motor vehicles, in the case of notification sent by a motor vehicle manufacturer; identified replacement equipment, in the case of notification sent by a replacement equipment manufacturer) fail to conform to Federal Motor Vehicle Safety Standard No. (number and title of standard).''

(d) When the manufacturer determines that the defect or noncompliance may not exist in each such vehicle or item of replacement equipment, he may include an additional statement to that effect.

(e) A clear description of the defect or noncompliance, which shall include—

(1) An identification of the vehicle system or particular item(s) of motor vehicle equipment affected.

(2) A description of the malfunction that may occur as a result of the defect or noncompliance. The description of a noncompliance with an applicable standard shall include, in general terms, the difference between the performance of the noncomplying vehicle or item of replacement equipment and the performance specified by the standard;

(3) A statement of any operating or other conditions that may cause the malfunction to occur; and

(4) A statement of the precautions, if any, that the owners should take to reduce the chance that the malfunction will occur before the defect or noncompliance is remedied.

(f) An evaluation of the risk to motor vehicle safety reasonably related to the defect or noncompliance.

(1) When vehicle crash is a potential occurrence, the evaluation shall include whichever of the following is appropriate:

(i) A statement that the defect or noncompliance can cause vehicle crash without prior warning; or

(ii) A description of whatever prior warning may occur, and a statement that if this warning is not heeded, vehicle crash can occur.

(2) When vehicle crash is not the potential occurrence, the evaluation must include a statement indicating the general type of injury to occupants of the vehicle, or to persons outside the vehicle, that can result from the defect or noncompliance, and a description of whatever prior warning may occur.

(g) A statement of measures to be taken to remedy the defect or noncompliance, in accordance with paragraph (g)(1) or (g)(2) of this section, whichever is appropriate.

(1) When the manufacturer is required by the Act to remedy the defect or noncompliance without charge, or when he will voluntarily so remedy in full conformity with the Act, he shall include—

(i) A statement that he will cause such defect or noncompliance to be remedied without charge, and whether such remedy will be by repair, replacement, or (except in the case of replacement equipment) refund, less depreciation, of the purchase price.

(ii) The earliest date on which the defect or noncompliance will be remedied without charge. In the case of remedy by repair, this date shall be the earliest date on which the manufacturer reasonably expects that dealers or other service facilities will receive necessary parts and instructions. The manufacturer shall specify the last date, if any, on which he will remedy tires without charge.

(iii) In the case of remedy by repair through the manufacturer's dealers or other service facilities:

(A) A general description of the work involved in repairing the defect or noncompliance; and

(B) The manufacturer's estimate of the time reasonably necessary to perform the labor required to correct the defect or noncompliance.

(iv) In the case of remedy by repair through service facilities other than those of the manufacturer or its dealers:

(A) The name and part number of each part must be added, replaced, or modified;

(B) A description of any modifications that must be made to existing parts, which shall also be identified by name and part number;

(C) Information as to where needed parts will be available;

(D) A detailed description (including appropriate illustrations) of each step required to correct the defect or noncompliance;

(E) The manufacturer's estimate of the time reasonably necessary to perform the labor required to correct the defect or noncompliance; and

(F) The manufacturer's recommendations of service facilities where the owner should have the repairs performed.

(v) In the case of remedy by replacement, a description of the motor vehicle or item of replacement equipment that the manufacturer will provide as a replacement for the defective or noncomplying vehicle or equipment.

(vi) In the case of remedy by refund of purchase price, the method or basis for the manufacturer's assessment of depreciation.

(vii) A statement informing the owner that he or she may submit a complaint to the Administrator, National Highway Traffic Safety Administration, 1200 New Jersey Ave., SE., Washington, DC 20590; or call the toll-free Vehicle Safety Hotline at 1–888–327–4236 (TTY: 1–800–424–9153); or go to *http://www.safercar.gov*, if the owner believes that:

(A) The manufacturer, distributor, or dealer has failed or is unable to remedy the defect or noncompliance without charge.

(B) The manufacturer has failed or is unable to remedy the defect or noncompliance without charge—

(*1*) (In the case of motor vehicles or items of replacement equipment, other than tires) within a reasonable time, which is not longer than 60 days in the case of repair after the owner's first tender to obtain repair following the earliest repair date specified in the notification, unless the period is extended by Administrator.

(*2*) (In the case of tires) after the date specified in the notification on which replacement tires will be available.

(2) When the manufacturer is not required to remedy the defect or noncompliance without charge and he will not voluntarily so remedy, the statement shall include—

(i) A statement that the manufacturer is not required by the Act to remedy without charge.

(ii) A statement of the extent to which the manufacturer will voluntarily remedy, including the method of remedy and any limitations and conditions imposed by the manufacturer on such remedy.

(iii) The manufacturer's opinion whether the defect or noncompliance can be remedied by repair. If the manufacturer believes that repair is possible, the statement shall include the information specified in paragraph (g)(1)(iv) of this section, except that;

(A) The statement required by paragraph (g)(1)(iv)(A) of this section shall also indicate the suggested list price of each part.

(B) The statement required by paragraph (g)(1)(iv)(C) of this section shall also indicate the manufacturer's estimate of the date on which the parts will be generally available.

(h) Any lessor who receives a notification of a determination of a safety-related defect or noncompliance pertaining to any leased motor vehicle shall send a copy of such notice to the lessee as prescribed by § 577.7(a)(2)(iv). This requirement applies to both initial and follow-up notifications, but

does not apply where the manufacturer has notified a lessor's lessees directly.

(Authority: Secs. 108, 112, and 119, Pub. L. 89–563; 80 Stat. 718; secs. 102, 103, and 104, Pub. L. 93–492, 88 Stat. 1470 (15 U.S.C. 1397, 1401, 1408, and 1411–1420); delegation of authority at 49 CFR 1.50)

[41 FR 56816, Dec. 30, 1976, as amended at 46 FR 6971, Jan. 22, 1981; 46 FR 28657, May 28, 1981; 60 FR 17270, Apr. 5, 1995; 61 FR 279, Jan. 4, 1996; 68 FR 18142, Apr. 15, 2003; 70 FR 35557, June 21, 2005; 72 FR 32016, June 11, 2007]

§577.6 Notification pursuant to Administrator's decision.

(a) *Agency-ordered notification.* When a manufacturer is ordered pursuant to 49 U.S.C. 30118(b) to provide notification of a defect or noncompliance, he shall provide such notification in accordance with §§577.5 and 577.7, except that the statement required by paragraph (c) of §577.5 shall indicate that the decision has been made by the Administrator of the National Highway Traffic Safety Administration.

(b) *Provisional notification.* When a manufacturer does not provide notification as required by paragraph (a) of this section, and an action concerning the Administrator's order to provide such notification has been filed in a United States District Court, the manufacturer shall, upon the Administrator's further order, provide in accordance with paragraph (b) of §577.7 a provisional notification containing the information specified in this paragraph, in the order and, where specified, the form of paragraphs (b)(1) through (b)(12) of this section.

(1) An opening statement: ''This notice is sent to you in accordance with the requirements of the National Traffic and Motor Vehicle Safety Act.''

(2) Whichever of the following statements is appropriate:

(i) ''The Administrator of the National Highway Traffic Safety Administration has decided that a defect which relates to motor vehicle safety exists in (identified motor vehicles, in the case of notification sent by a manufacturer of motor vehicles; identified replacement equipment, in the case of notification sent by a manufacturer of replacement equipment);'' or

(ii) ''The Administrator of the National Highway Traffic Safety Administration has decided that (identified motor vehicles in the case of notification sent by a motor vehicle manufacturer; identified replacement equipment, in the case of notification sent by a manufacturer of replacement equipment) fail to conform to federal Motor Vehicle Safety Standard No. (number and title of standard).''

(3) When the Administrator decides that the defect or noncompliance may not exist in each such vehicle or item of replacement equipment, the manufacturer may include an additional statement to that effect.

(4) The statement: ''(Manufacturer's name or division) is contesting this determination in a proceeding in the Federal courts and has been required to issue this notice pending the outcome of the court proceeding.''

(5) A clear description of the Administrator's stated basis for his decision, as provided in his order, including a brief summary of the evidence and reasoning that the Administrator relied upon in making his decision.

(6) A clear description of the Administrator' stated evaluation as provided in his order of the risk to motor vehicle safety reasonably related to the defect or noncompliance.

(7) Any measures that the Administrator has stated in his order should be taken by the owner to avoid an unreasonable hazard resulting from the defect or noncompliance.

(8) A brief summary of the evidence and reasoning upon which the manufacturer relies in contesting the Administrator's determination.

(9) A statement regarding the availability of remedy and reimbursement in accordance with paragraph (b)(9)(i) or (9)(ii) of this section, whichever is appropriate.

(i) When the purchase date of the vehicle or item of equipment is such that the manufacturer is required by the Act to remedy without charge or to reimburse the owner for reasonable and necessary repair expenses, he shall include—

(A) A statement that the remedy will be provided without charge to the owner if the Court upholds the Administrator's decision;

(B) A statement of the method of remedy. If the manufacturer has not

yet determined the method of remedy, he shall indicate that he will select either repair, replacement with an equivalent vehicle or item of replacement equipment, or (except in the case of replacement equipment) refund, less depreciation, of the purchase price; and

(C) A statement that, if the Court upholds the Administrator's decision, he will reimburse the owner for any reasonable and necessary expenses that the owner incurs (not in excess of any amount specified by the Administrator) in repairing the defect or noncompliance following a date, specified by the manufacturer, which shall not be later than the date of the Administrator's order to issue this notification.

(ii) When the manufacturer is not required either to remedy without charge or to reimburse, he shall include—

(A) A statement that he is not required to remedy or reimburse, or

(B) A statement of the extent to which he will voluntarily remedy or reimburse, including the method of remedy, if then known, and any limitations and conditions on such remedy or reimbursement.

(10) A statement indicating whether, in the manufacturer's opinion, the defect or noncompliance can be remedied by repair. When the manufacturer believes that such remedy is feasible, the statement shall include:

(i) A general description of the work and the manufacturer's estimate of the costs involved in repairing the defect or noncompliance;

(ii) Information on where needed parts and instructions for repairing the defect or noncompliance will be available, including the manufacturer's estimate of the day on which they will be generally available;

(iii) The manufacturer's estimate of the time reasonably necessary to perform the labor required to correct the defect or noncompliance; and

(iv) The manufacturer's recommendations of service facilities where the owner could have the repairs performed, including (in the case of a manufacturer required to reimburse if the Administrator's decision is upheld in the court proceeding) at least one service facility for whose charges the owner will be fully reimbursed if the Administrator's decision is upheld.

(11) A statement that further notice will be mailed by the manufacturer to the owner if the Administrator's decision is upheld in the court proceeding.

(12) An address of the manufacturer where the owner may write to obtain additional information regarding the notification and remedy.

(c) *Post-litigation notification.* When a manufacturer does not provide notification as required in paragraph (a) of this section and the Administrator prevails in an action commenced with respect to such notification, the manufacturer shall, upon the Administrator's further order, provide notification in accordance with paragraph (b) of § 577.7 containing the information specified in paragraph (a) of this section, except that—

(1) The statement required by paragraph (c) of § 577.5 shall indicate that the decision has been made by the Administrator and that his decision has been upheld in a proceeding in the Federal courts; and

(2) When a provisional notification was issued regarding the defect or noncompliance and the manufacturer is required under the Act to reimburse—

(i) The manufacturer shall state that he will reimburse the owner for any reasonable and necessary expenses that the owner incurred (not in excess of any amount specified by the Administrator) for repair of the defect or noncompliance of the vehicle or item of equipment on or after the date on which provisional notification was ordered to be issued and on or before a date not sooner than the date on which this notification is received by the owner. The manufacturer shall determine and specify both dates.

(ii) The statement required by paragraph (g)(1)(vii) of § 577.5 shall also inform the owner that he may submit a complaint to the Administrator if the owner believes that the manufacturer has failed to reimburse adequately.

(3) If the manufacturer is not required under the Act to reimburse, he shall include—

(i) A statement that he is not required to reimburse, or

(ii) When he will voluntarily reimburse, a statement of the extent to

which he will do so, including any limitations and conditions on such reimbursement.

[41 FR 56816, Dec. 30, 1976, as amended at 60 FR 17271, Apr. 5, 1995]

§ 577.7 Time and manner of notification.

(a) The notification required by § 577.5 shall—

(1) Be furnished within a reasonable time after the manufacturer first decides that either a defect that relates to motor vehicle safety or a noncompliance exists. The Administrator may order a manufacturer to send the notification to owners on a specific date where the Administrator finds, after consideration of available information and the views of the manufacturer, that such notification is in the public interest. The factors that the Administrator may consider include, but are not limited to, the severity of the safety risk; the likelihood of occurrence of the defect or noncompliance; whether there is something that an owner can do to reduce either the likelihood of occurrence of the defect or noncompliance or the severity of the consequences; whether there will be a delay in the availability of the remedy from the manufacturer; and the anticipated length of any such delay.

(2) Be accomplished—

(i) In the case of a notification required to be sent by a motor vehicle manufacturer, by first class mail to each person who is registered under State law as the owner of the vehicle and whose name and address are reasonably ascertainable by the manufacturer through State records or other sources available to him. If the owner cannot be reasonably ascertained, the manufacturer shall notify the most recent purchaser known to the manufacturer. The manufacturer shall also provide notification to each lessee of a leased motor vehicle that is covered by an agreement between the manufacturer and a lessor under which the manufacturer is to notify lessees directly of safety-related defects and noncompliances.

(ii) In the case of a notification required to be sent by a replacement equipment manufacturer—

(A) By first class mail to the most recent purchaser known to the manufacturer, and

(B) (Except in the case of a tire) if decided by the Administrator to be required for motor vehicle safety, by public notice in such manner as the Administrator may require after consultation with the manufacturer.

(iii) In the case of a manufacturer required to provide notification concerning any defective or noncomplying tire, by first class or certified mail.

(iv) In the case of a notification to be sent by a lessor to a lessee of a leased motor vehicle, by first-class mail to the most recent lessee known to the lessor. Such notification shall be mailed within ten days of the lessor's receipt of the notification from the vehicle manufacturer.

(b) The notification required by any paragraph of § 577.6 shall be provided:

(1) Within 60 days after the manufacturer's receipt of the Administrator's order to provide the notification, except that the notification shall be furnished within a shorter or longer period if the Administrator incorporates in his order a finding that such period is in the public interest; and

(2) In the manner and to the recipient specified in paragraph (a) of this section.

(c) The notification required by § 577.13 shall—

(1) Be furnished within a reasonable time after the manufacturer decides that a defect that relates to motor vehicle safety or a noncompliance exists. In the case of defects or noncompliances that present an immediate and substantial threat to motor vehicle safety, the manufacturer shall transmit this notice to dealers and distributors within three business days of its transmittal of the Defect and Noncompliance Information Report under 49 CFR 573.6 to NHTSA, except that when the manufacturer transmits the notice by other than electronic means, the manufacturer shall transmit this notice to dealers and distributors within five business days of its transmittal of the Defect and Noncompliance Information Report to NHTSA. In all other cases, the notification shall be provided in accordance with the schedule submitted to the agency pursuant to

§ 573.6(c)(8)(ii), unless that schedule is modified by the Administrator. The Administrator may direct a manufacturer to send the notification to dealers on a specific date if the Administrator finds, after consideration of available information and the views of the manufacturer, that such notification is in the public interest. The factors that the Administrator may consider include, but are not limited to, the severity of the safety risk; the likelihood of occurrence of the defect or noncompliance; the time frame in which the defect or noncompliance may manifest itself; availability of an interim remedial action by the owner; whether a dealer inspection would identify vehicles or items of equipment that contain the defect or noncompliance; and the time frame in which the manufacturer plans to provide the notification and the remedy to its dealers.

(2) Be accomplished—

(i) In the case of a notification required to be sent by a motor vehicle manufacturer, by certified mail, verifiable electronic means such as receipts or logs from electronic mail or satellite distribution system, or other more expeditious and verifiable means to all dealers and distributors of the vehicles that contain the defect or noncompliance.

(ii) In the case of a notification required to be sent by a manufacturer of replacement equipment or tires, by certified mail, verifiable electronic means such as receipts or logs from electronic mail or satellite distribution system, or other more expeditious and verifiable means to all dealers and distributors of the product that are known to the manufacturer.

(iii) In those cases where a manufacturer of motor vehicles or items of motor vehicle equipment provided the recalled product(s) to a group of dealers or distributors through a central office, notification to that central office will be deemed to be notice to all dealers and distributors within that group.

(iv) In those cases in which a manufacturer of motor vehicles or items of motor vehicle equipment has provided the recalled product to independent dealers through independent distributors, the manufacturer may satisfy its notification responsibilities by providing the information required under this section to its distributors. In such cases, the manufacturer must also instruct those distributors to transmit a copy of the manufacturer's notification to known distributors and retail outlets along the distribution chain within five working days from its receipt.

(d) Notwithstanding paragraph (c)(1) of this section, where the recall is being conducted pursuant to an order issued by the Administrator under 49 U.S.C. 30118(b), notification required by § 577.13 shall be given on or before the date prescribed in the Administrator's order.

[41 FR 56816, Dec. 30, 1976, as amended at 60 FR 17271, Apr. 5, 1995; 69 FR 34959, June 23, 2004; 70 FR 38814, July 6, 2005]

§ 577.8 Disclaimers.

(a) A notification sent pursuant to §§ 577.5, 577.6, 577.9 or 577.10 regarding a defect which relates to motor vehicle safety shall not, except as specifically provided in this part, contain any statement or implication that there is no defect, that the defect does not relate to motor vehicle safety, or that the defect is not present in the owner's or lessee's vehicle or item of replacement equipment. This section also applies to any notification sent to a lessor or directly to a lessee by a manufacturer.

(b) A notification sent pursuant to §§ 577.5, 577.6, 577.9 or 577.10 regarding a noncompliance with an applicable motor vehicle safety standard shall not, except as specifically provided in this part, contain any statement or implication that there is not a noncompliance, or that the noncompliance is not present in the owner's or lessee's vehicle or item of replacement equipment. This section also applies to any notification sent to a lessor or directly to a lessee by a manufacturer.

[60 FR 17272, Apr. 5, 1995]

§ 577.9 Conformity to statutory requirements.

A notification that does not conform to the requirements of this part is a violation of the Act.

§ 577.10 Follow-up notification.

(a) If, based on quarterly reports submitted pursuant to § 573.7 of this part or other available information, the Administrator decides that a notification of a safety-related defect of a noncompliance with a Federal motor vehicle safety standard sent by a manufacturer has not resulted in an adequate number of vehicles or items of equipment being returned for remedy, the Administrator may direct the manufacturer to send a follow-up notification in accordance with this section. The scope, timing, form, and content of such follow-up notification will be established by the Administrator, in consultation with the manufacturer, to maximize the number of owners, purchasers, and lessees who will present their vehicles or items of equipment for remedy.

(b) The Administrator may consider the following factors in deciding whether or not to require a manufacturer to undertake a follow-up notification campaign:

(1) The percentage of covered vehicles or items of equipment that have been presented for the remedy;

(2) The amount of time that has elapsed since the prior notification(s);

(3) The likelihood that a follow-up notification will increase the number of vehicles or items of equipment receiving the remedy;

(4) The seriousness of the safety risk from the defect or noncompliance;

(5) Whether the prior notification(s) undertaken by the manufacturer complied with the requirements of the statute and regulations; and

(6) Such other factors as are consistent with the purpose of the statute.

(c) A manufacturer shall be required to provide a follow-up notification under this section only with respect to vehicles or items of equipment that have not been returned for remedy pursuant to the prior notification(s).

(d) Except where the Administrator determines otherwise, the follow-up notification shall be sent to the same categories of recipients that received the prior notification(s).

(e) A follow-up notification must include:

(1) A statement that identifies it as a follow-up to an earlier communication;

(2) A statement urging the recipient to present the vehicle or item of equipment for remedy; and

(3) Except as determined by the Administrator, the information required to be included in the initial notification.

(f) The manufacturer shall mark the outside of each envelope in which it sends a follow-up notification in a manner which meets the requirements of § 577.5(a) of this part.

(g) Notwithstanding any other provision of this part, the Administrator may authorize the use of other media besides first-class mail for a follow-up notification.

[60 FR 17272, Apr. 5, 1995, as amended at 68 FR 18142, Apr. 15, 2003]

§ 577.11 Reimbursement notification.

(a) Except as otherwise provided in paragraph (e) of this section, when a manufacturer of motor vehicles or replacement equipment is required to provide notice in accordance with §§ 577.5 or 577.6, in addition to complying with other sections of this part, the manufacturer shall notify owners that they may be eligible to receive reimbursement for the cost of obtaining a pre-notification remedy of a problem associated with a defect or noncompliance consistent with the manufacturer's reimbursement plan submitted to NHTSA pursuant to §§ 573.6(c)(8)(i) and 573.13 of this chapter.

(b) The manufacturer's notification shall include a statement, following the items required by § 577.5 or § 577.6, that

(1) Refers to the possible eligibility for reimbursement for the cost of repair or replacement; and

(2) Describes how a consumer may obtain information about reimbursement from the manufacturer;

(c) The information referred to in § 577.11(b)(2) of this part shall be provided in one of the following ways:

(1) In an enclosure to the notification under § 577.5 or § 577.6 that provides the information described in § 577.11(d), consistent with the manufacturer's reimbursement plan; or

(2) Through a toll-free telephone number (with TTY capability) identified in the notification that provides the information described in § 577.11(d),

consistent with the manufacturer's reimbursement plan.

(3) For notifications of defects or noncompliances in item of motor vehicle equipment that are in a form other than a letter to a specific owner or purchaser, if the manufacturer does not otherwise maintain a toll-free telephone number for the use of consumers, the manufacturer may refer claimants to a non-toll-free telephone number (with TTY capability) if it also specifies a mailing address at which owners can obtain the relevant information regarding the manufacturer's reimbursement plan.

(d) The information to be provided under paragraph (c) of this section must:

(1) Identify the vehicle and/or equipment that is the subject of the recall and the underlying problem;

(2) State that the manufacturer has a program for reimbursing pre-notification remedies and identify the type of remedy eligible for reimbursement;

(3) Identify any limits on the time period in which the repair or replacement of the recalled vehicle or equipment must have occurred;

(4) Identify any restrictions on eligibility for reimbursement that the manufacturer is imposing (as limited by § 573.13 (d) of this chapter);

(5) Specify all necessary documentation that must be submitted to obtain reimbursement;

(6) Explain how to submit a claim for reimbursement of a pre-notification remedy; and

(7) Identify the office and address of the manufacturer where a claim can be submitted by mail and any authorized dealers or facilities where a claimant may submit a claim for reimbursement.

(e) The manufacturer is not required to provide notification regarding reimbursement under this section if NHTSA finds, based upon a written request by a manufacturer accompanied by supporting information, views, and arguments, that all covered vehicles are under warranty or that no person would be eligible for reimbursement under § 573.13 of this chapter.

[67 FR 64065, Oct. 17, 2002]

§ 577.12 Notification pursuant to an accelerated remedy program.

(a) When the Administrator requires a manufacturer to accelerate its remedy program under § 573.14 of this chapter, or when a manufacturer agrees with a request from the Administrator that it accelerate its remedy program in advance of being required to do so, in addition to complying with other sections of this part, the manufacturer shall provide notification in accordance with this section.

(b) Except as provided elsewhere in this section or when the Administrator determines otherwise, the notification under this section shall be sent to the same recipients as provided by § 577.7. If no notification has been provided to owners pursuant to this part, the provisions required by this section may be combined with the notification under §§ 577.5 or 577.6. A manufacturer need only provide a notification under this section to owners of vehicles or items of equipment for which the defect or noncompliance has not been remedied.

(c) The manufacturer's notification shall include the following:

(1) If there was a prior notification, a statement that identifies that notification and states that this notification supplements it;

(2) When the accelerated remedy program has been required by the Administrator, a statement that the National Highway Traffic Safety Administration has required the manufacturer to accelerate its remedy program;

(3) A statement of how the program has been accelerated (*e.g.*, by expanding the sources of replacement parts and/or expanding the number of authorized repair facilities);

(4) Where applicable, a statement that the owner may elect to obtain the recall remedy using designated service facilities other than those that are owned or franchised by the manufacturer or are the manufacturer's authorized dealers, and an explanation of how the owner may arrange for service at those other facilities;

(5) Where applicable, a statement that the owner may elect to obtain the recall remedy using specified replacement parts or equipment from sources other than the manufacturer;

(6) Where applicable, a statement indicating whether the owner will be required to pay an alternative facility and/or parts supplier, subject to reimbursement by the manufacturer; and

(7) If an owner will be required to pay an alternative facility and/or parts supplier, a statement that the owner will be eligible to have those expenditures reimbursed by the manufacturer, and a description of how a consumer may obtain information about reimbursement from the manufacturer consistent with §577.11(b)(2), (c) and (d).

[67 FR 72393, Dec. 5, 2002]

§577.13 Notification to dealers and distributors.

(a) The notification to dealers and distributors of a safety-related defect or a noncompliance with a Federal motor vehicle safety standard shall contain a clear statement that identifies the notification as being a safety recall notice, an identification of the motor vehicles or items of motor vehicle equipment covered by the recall, a description of the defect or noncompliance, and a brief evaluation of the risk to motor vehicle safety related to the defect or noncompliance. The notification shall also include a complete description of the recall remedy, and the estimated date on which the remedy will be available. Information required by this paragraph that is not available at the time of the original notification shall be provided as it becomes available.

(b) The notification shall also include an advisory stating that it is a violation of Federal law for a dealer to deliver a new motor vehicle or any new or used item of motor vehicle equipment (including a tire) covered by the notification under a sale or lease until the defect or noncompliance is remedied.

(c) The manufacturer shall, upon request of the Administrator, demonstrate that it sent the required notification to each of its known dealers and distributors and the date of such notification.

[69 FR 34960, June 23, 2004, as amended at 70 FR 38815, July 6, 2005]

PART 578—CIVIL AND CRIMINAL PENALTIES

Sec.

578.1 Scope.
578.2 Purpose.
578.3 Applicability.
578.4 Definitions.
578.5 Inflationary adjustment of civil penalties.
578.6 Civil penalties for violations of specified provisions of Title 49 of the United States Code.
578.7 Criminal safe harbor provision.

AUTHORITY: Pub. L. No. 101–410, Pub. L. No. 104–134, 49 U.S.C. 30165, 30170, 30505, 32304A, 32308, 32309, 32507, 32709, 32710, 32912, and 33115 as amended; delegation of authority at 49 CFR 1.50.

SOURCE: 62 FR 5169, Feb. 4, 1997, unless otherwise noted.

§578.1 Scope.

This part specifies the civil penalties for violations of statutes administered by the National Highway Traffic Safety Administration, as adjusted for inflation. This part also sets forth the requirements regarding the reasonable time and the manner of correction for a person seeking safe harbor protection from criminal liability under 49 U.S.C. 30170(a).

[65 FR 81418, Dec. 26, 2000]

§578.2 Purpose.

One purpose of this part is to preserve the remedial impact of civil penalties and to foster compliance with the law by specifying the civil penalties for statutory violations, as adjusted for inflation. The other purpose of this part is to set forth the requirements regarding the reasonable time and the manner of correction for a person seeking safe harbor protection from criminal liability under 49 U.S.C. 30170(a).

[65 FR 81418, Dec. 26, 2000]

§578.3 Applicability.

This part applies to civil penalties for violations of Chapters 301, 305, 323, 325, 327, 329, and 331 of Title 49 of the

United States Code. This part also applies to the criminal penalty safe harbor provision of section 30170 of Title 49 of the United States Code.

[65 FR 81419, Dec. 26, 2000]

§ 578.4 Definitions.

All terms used in this part that are defined in sections 30102, 30501, 32101, 32702, 32901, and 33101 of Title 49 of the United States Code are used as defined in the appropriate statute.

Administrator means the Administrator of the National Highway Traffic Safety Administration.

Civil penalty means any non-criminal penalty, fine, or other sanction that:

(1) Is for a specific monetary amount as provided by Federal law, or has a maximum amount provided for by Federal law; and

(2) Is assessed, compromised, collected, or enforced by NHTSA pursuant to Federal law.

NHTSA means the National Highway Traffic Safety Administration.

[62 FR 5169, Feb. 4, 1997, as amended at 65 FR 81419, Dec. 26, 2000]

§ 578.5 Inflationary adjustment of civil penalties.

The civil penalties set forth in this part continue in effect until adjusted by the Administrator. At least once every four years, the Administrator shall review the amount of these civil penalties and will, if appropriate, adjust them by rule.

§ 578.6 Civil penalties for violations of specified provisions of Title 49 of the United States Code.

(a) *Motor vehicle safety*—(1) *In general.* A person who violates any of sections 30112, 30115, 30117 through 30122, 30123(a), 30125(c), 30127, or 30141 through 30147 of Title 49 of the United States Code or a regulation prescribed under any of those sections is liable to the United States Government for a civil penalty of not more than $6,000 for each violation. A separate violation occurs for each motor vehicle or item of motor vehicle equipment and for each failure or refusal to allow or perform an act required by any of those sections. The maximum civil penalty under this paragraph for a related series of violations is $16,375,000.

(2) *School buses.* Notwithstanding paragraph (a)(1) of this section, a person who:

(i) Violates section 30112(a)(1) of Title 49 United States Code by the manufacture, sale, offer for sale, introduction or delivery for introduction into interstate commerce, or importation of a school bus or school bus equipment (as those terms are defined in 49 U.S.C. § 30125(a)); or

(ii) Violates section 30112(a)(2) of Title 49 United States Code, shall be subject to a civil penalty of not more than $11,000 for each violation. A separate violation occurs for each motor vehicle or item of motor vehicle equipment and for each failure or refusal to allow or perform an act required by this section. The maximum penalty under this paragraph for a related series of violations is $16,650,000.

(3) *Section 30166.* A person who violates section 30166 of Title 49 of the United States Code or a regulation prescribed under that section is liable to the United States Government for a civil penalty for failing or refusing to allow or perform an act required under that section or regulation. The maximum penalty under this paragraph is $6,000 per violation per day. The maximum penalty under this paragraph for a related series of daily violations is $16,375,000.

(b) *National Automobile Title Information System.* An individual or entity violating 49 U.S.C. Chapter 305 is liable to the United States Government for a civil penalty of not more than $1,100 for each violation.

(c) *Bumper standards.* (1) A person that violates 49 U.S.C. § 32506(a) is liable to the United States Government for a civil penalty of not more than $1,100 for each violation. A separate violation occurs for each passenger motor vehicle or item of passenger motor vehicle equipment involved in a violation of 49 U.S.C. 32506(a)(1) or (4)—

(i) That does not comply with a standard prescribed under 49 U.S.C. 32502, or

(ii) For which a certificate is not provided, or for which a false or misleading certificate is provided, under 49 U.S.C. 32504.

(2) The maximum civil penalty under this paragraph (c) for a related series of violations is $1,175,000.

(d) *Consumer information*—(1) *Crashworthiness and damage susceptibility*. A person that violates 49 U.S.C. 32308(a), regarding crashworthiness and damage susceptibility, is liable to the United States Government for a civil penalty of not more than $1,100 for each violation. Each failure to provide information or comply with a regulation in violation of 49 U.S.C. 32308(a) is a separate violation. The maximum penalty under this paragraph for a related series of violations is $575,000.

(2) *Consumer tire information*. Any person who fails to comply with the national tire fuel efficiency program under 49 U.S.C. 32304A is liable to the United States Government for a civil penalty of not more than $50,000 for each violation.

(e) *Country of origin content labeling*. A manufacturer of a passenger motor vehicle distributed in commerce for sale in the United States that willfully fails to attach the label required under 49 U.S.C. 32304 to a new passenger motor vehicle that the manufacturer manufactures or imports, or a dealer that fails to maintain that label as required under 49 U.S.C. 32304, is liable to the United States Government for a civil penalty of not more than $1,100 for each violation. Each failure to attach or maintain that label for each vehicle is a separate violation.

(f) *Odometer tampering and disclosure*. (1) A person that violates 49 U.S.C. Chapter 327 or a regulation prescribed or order issued thereunder is liable to the United States Government for a civil penalty of not more than $3,200 for each violation. A separate violation occurs for each motor vehicle or device involved in the violation. The maximum civil penalty under this paragraph for a related series of violations is $140,000.

(2) A person that violates 49 U.S.C. Chapter 327 or a regulation prescribed or order issued thereunder, with intent to defraud, is liable for three times the actual damages or $2,000, whichever is greater.

(g) *Vehicle theft protection*. (1) A person that violates 49 U.S.C. 33114(a)(1)–(4) is liable to the United States Government for a civil penalty of not more than $1,100 for each violation. The failure of more than one part of a single motor vehicle to conform to an applicable standard under 49 U.S.C. 33102 or 33103 is only a single violation. The maximum penalty under this paragraph for a related series of violations is $350,000.

(2) A person that violates 49 U.S.C. 33114(a)(5) is liable to the United States Government for a civil penalty of not more than $140,000 a day for each violation.

(h) *Automobile fuel economy*. (1) A person that violates 49 U.S.C. 32911(a) is liable to the United States Government for a civil penalty of not more than $16,000 for each violation. A separate violation occurs for each day the violation continues.

(2) Except as provided in 49 U.S.C. 32912(c), a manufacturer that violates a standard prescribed for a model year under 49 U.S.C. 32902 is liable to the United States Government for a civil penalty of $5.50 multiplied by each .1 of a mile a gallon by which the applicable average fuel economy standard under that section exceeds the average fuel economy—

(i) Calculated under 49 U.S.C. 32904(a)(1)(A) or (B) for automobiles to which the standard applies manufactured by the manufacturer during the model year;

(ii) Multiplied by the number of those automobiles; and

(iii) Reduced by the credits available to the manufacturer under 49 U.S.C. 32903 for the model year.

[62 FR 5169, Feb. 4, 1997, as amended at 64 FR 37878, July 14, 1999; 65 FR 68110, Nov. 14, 2000; 66 FR 41151, Aug. 7, 2001; 69 FR 57866, Sept. 28, 2004; 70 FR 53311, Sept. 8, 2005; 71 FR 28281, May 16, 2006; 73 FR 9956, Feb. 25, 2008; 75 FR 5248, Feb. 2, 2010]

§ 578.7 Criminal safe harbor provision.

(a) *Scope*. This section sets forth the requirements regarding the reasonable time and the manner of correction for a person seeking safe harbor protection from criminal liability under 49 U.S.C. 30170(a)(2), which provides that a person described in 49 U.S.C. 30170(a)(1) is not subject to criminal penalties thereunder if:

(1) At the time of the violation, such person does not know that the violation would result in an accident causing death or serious bodily injury; and

(2) The person corrects any improper reports or failure to report, with respect to reporting requirements of 49 U.S.C. 30166, within a reasonable time.

(b) *Reasonable time.* A correction is considered to have been performed within a reasonable time if the person seeking protection from criminal liability makes the correction to any improper (i.e., incorrect, incomplete, or misleading) report not more than thirty (30) calendar days after the date of the report to the agency and corrects any failure to report not more than thirty (30) calendar days after the report was due to be sent to or received by the agency, as the case may be, pursuant to 49 U.S.C. 30166, including a regulation, requirement, request or order issued thereunder. In order to meet these reasonable time requirements, all submissions required by this section must be received by NHTSA within the time period specified in this paragraph, and not merely mailed or otherwise sent within that time period.

(c) *Sufficient manner of correction.* Each person seeking safe harbor protection from criminal penalties under 49 U.S.C. 30170(a)(2) must comply with the following with respect to each improper report and failure to report for which safe harbor protection is sought:

(1) Sign and submit to NHTSA a dated document identifying:

(i) Each previous improper report (e.g., informational statement and document submission), and each failure to report as required under 49 U.S.C. 30166, including a regulation, requirement, request or order issued thereunder, for which protection is sought, and

(ii) The specific predicate under which the improper or omitted report should have been provided (e.g., the report was required by a specified regulation, NHTSA Information Request, or NHTSA Special Order).

(2) Submit the complete and correct information that was required to be submitted but was improperly submitted or was not previously submitted, including relevant documents that were not previously submitted, or, if the person cannot do so, provide a detailed description of that information and/or the content of those documents and the reason why the individual cannot provide them to NHTSA (e.g., the information or documents are not in the individual's possession or control).

(3) For a corporation, the submission must be signed by an authorized person (ordinarily, the individual officer or employee who submitted the improper report or who should have provided the report that the corporation failed to submit on behalf of the company, or someone in the company with authority to make such a submission).

(4) Submissions must be made by a means which permits the sender to verify promptly that the report was in fact received by NHTSA and the day it was received by NHTSA.

(5) Submit the report to Chief Counsel (NCC–10), National Highway Traffic Safety Administration, Room 5219, 400 Seventh Street, SW., Washington, DC 20590.

[65 FR 81419, Dec. 26, 2000, as amended at 66 FR 38384, July 24, 2001]

PART 579—REPORTING OF INFORMATION AND COMMUNICATIONS ABOUT POTENTIAL DEFECTS

Subpart A—General

Sec.

579.1 Scope.
579.2 Purpose.
579.3 Application.
579.4 Terminology.
579.5 Notices, bulletins, customer satisfaction campaigns, consumer advisories, and other communications.
579.6 Address for submitting reports and other information.
579.7–579.10 [Reserved]

Subpart B—Reporting of Safety Recalls and Other Safety Campaigns in Foreign Countries

579.11 Reporting responsibilities.
579.12 Contents of reports.
579.13–579.20 [Reserved]

Subpart C—Reporting of Early Warning Information

579.21 Reporting requirements for manufacturers of 5,000 or more light vehicles annually.

579.22 Reporting requirements for manufacturers of 100 or more buses, manufacturers of 500 or more emergency vehicles and manufacturers of 5,000 or more medium-heavy vehicles (other than buses and emergency vehicles) annually.
579.23 Reporting requirements for manufacturers of 5,000 or more motorcycles annually.
579.24 Reporting requirements for manufacturers of 5,000 or more trailers annually.
579.25 Reporting requirements for manufacturers of child restraint systems.
579.26 Reporting requirements for manufacturers of tires.
579.27 Reporting requirements for manufacturers of fewer than 100 buses annually, for manufacturers of fewer than 500 emergency vehicles annually, for manufacturers of fewer than 5,000 light vehicles, medium-heavy vehicles (other than buses and emergency vehicles), motorcycles or trailers annually, for manufacturers of original equipment, and for manufacturers of replacement equipment other than child restraint systems and tires.
579.28 Due date of reports and other miscellaneous provisions.
579.29 Manner of reporting.

AUTHORITY: 49 U.S.C. 30102–103, 30112, 30117–121, 30166–167; delegation of authority at 49 CFR 1.50 and 49 CFR 501.8.

SOURCE: 67 FR 45873, July 10, 2002, unless otherwise noted.

Subpart A—General

§579.1 Scope.

This part sets forth requirements for reporting information and submitting documents that may help identify defects related to motor vehicle safety and noncompliances with Federal motor vehicle safety standards, including reports of foreign safety recalls and other safety-related campaigns conducted outside the United States under 49 U.S.C. 30166(l), early warning information under 49 U.S.C. 30166(m), and copies of communications about defects and noncompliances under 49 U.S.C. 30166(f).

§579.2 Purpose.

The purpose of this part is to enhance motor vehicle safety by specifying information and documents that manufacturers of motor vehicles and motor vehicle equipment must provide to NHTSA with respect to possible safety-related defects and noncompliances in their products, including the reporting of safety recalls and other safety campaigns that the manufacturer conducts outside the United States.

[67 FR 63310, Oct. 11, 2002]

§579.3 Application.

(a) This part applies to all manufacturers of motor vehicles and motor vehicle equipment with respect to all motor vehicles and motor vehicle equipment that have been offered for sale, sold, or leased in the United States by the manufacturer, including any parent corporation, any subsidiary or affiliate of the manufacturer, or any subsidiary or affiliate of any parent corporation, and with respect to all motor vehicles and motor vehicle equipment that have been offered for sale, sold, or leased in a foreign country by the manufacturer, including any parent corporation, any subsidiary or affiliate of the manufacturer, or any subsidiary or affiliate of any parent corporation, and are identical or substantially similar to any motor vehicles or motor vehicle equipment that have been offered for sale, sold, or leased in the United States.

(b) In the case of any report required under subpart B of this part, compliance by the fabricating manufacturer, the importer, the brand name owner, or a parent or subsidiary of such fabricator, importer, or brand name owner of the motor vehicle or motor vehicle equipment that is identical or substantially similar to that covered by the foreign recall or other safety campaign, shall be considered compliance by all persons.

(c) In the case of any report required under subpart C of this part, compliance by the fabricating manufacturer, the importer, the brand name owner, or a parent or United States subsidiary of such fabricator, importer, or brand name owner of the motor vehicle or motor vehicle equipment, shall be considered compliance by all persons.

(d) With regard to any information required to be reported under subpart C of this part, an entity covered under paragraph (a) of this section need only review information and systems where information responsive to subpart C of

this part is kept in the usual course of business.

[43 FR 38833, Aug. 31, 1978, as amended at 67 FR 63310, Oct. 11, 2002]

§ 579.4 Terminology.

(a) *Statutory terms*. The terms *dealer*, *defect*, *distributor*, *motor vehicle*, *motor vehicle equipment*, and *State* are used as defined in 49 U.S.C. 30102.

(b) *Regulatory terms*. The term *Vehicle Identification Number (VIN)* is used as defined in § 565.3(o) of this chapter. The terms *bus*, *Gross Vehicle Weight Rating (GVWR)*, *motorcycle*, *multipurpose passenger vehicle*, *passenger car*, *trailer*, and *truck* are used as defined in § 571.3(b) of this chapter. The term *Booster seat* is used as defined in S4 of § 571.213 of this chapter. The term *Tire Identification Number (TIN)* is the ''tire identification number'' described in § 574.5 of this chapter. The term *Limited production tire* is used as defined in § 575.104(c)(2) of this chapter.

(c) *Other terms*. The following terms apply to this part:

Administrator means the Administrator of the National Highway Traffic Safety Administration (NHTSA), or the Administrator's delegate.

Affiliate means, in the context of an affiliate of or person affiliated with a specified person, a person that directly, or indirectly through one or more intermediates, controls or is controlled by, or is under common control with, the person specified. The term person usually is a corporation.

Air bag means an air bag or other automatic occupant restraint device (other than a ''seat belt'' as defined in this subpart) installed in a motor vehicle that restrains an occupant in the event of a vehicle crash without requiring any action on the part of the occupant to obtain the benefit of the restraint. This term includes inflatable restraints (front and side air bags), knee bolsters, and any other automatic restraining device that may be developed that does not include a restraining belt or harness. This term also includes all air bag-related components, such as the inflator assembly, air bag module, control module, crash sensors and all hardware and software associated with the air bag. This term includes all associated switches, control units, connective elements (such as wiring harnesses, hoses, piping, etc.), and mounting elements (such as brackets, fasteners, etc.).

Base means the detachable bottom portion of a child restraint system that may remain in the vehicle to provide a base for securing the system to a seat in a motor vehicle.

Bead means all the materials in a tire below the sidewalls in the rim contact area, including bead rubber components, the bead bundle and rubber coating if present, the body ply and its turn-up including the rubber coating, rubber, fabric, or metallic reinforcing materials, and the inner-liner rubber under the bead area.

Brand name owner means a person that markets a motor vehicle or motor vehicle equipment under its own trade name whether or not it is the fabricator or importer of the vehicle or equipment.

Buckle and restraint harness means the components of a child restraint system that are intended to restrain a child seated in such a system, including the belt webbing, buckles, buckle release mechanism, belt adjusters, belt positioning devices, and shields.

Child restraint system means any system that meets, or is offered for sale in the United States as meeting, any definition in S4 of § 571.213 of this chapter, or that is offered for sale as a child restraint system in a foreign country.

Claim means a written request or written demand for relief, including money or other compensation, assumption of expenditures, or equitable relief, related to a motor vehicle crash, accident, the failure of a component or system of a vehicle or an item of motor vehicle equipment, or a fire originating in or from a motor vehicle or a substance that leaked from a motor vehicle. Claim includes, but is not limited to, a demand in the absence of a lawsuit, a complaint initiating a lawsuit, an assertion or notice of litigation, a settlement, covenant not to sue or release of liability in the absence of a written demand, and a subrogation request. A claim exists regardless of any denial or refusal to pay it, and regardless of whether it has been settled or resolved in the manufacturer's favor. The existence of a claim may not be

conditioned on the receipt of anything beyond the document(s) stating a claim. Claim does not include demands related to asbestos exposure, to emissions of volatile organic compounds from vehicle interiors, or to end-of-life disposal of vehicles, parts or components of vehicles, equipment, or parts or components of equipment.

Common green tires means tires that are produced to the same internal specifications but that have, or may have, different external characteristics and may be sold under different tire line names.

Consumer complaint means a communication of any kind made by a consumer (or other person) to or with a manufacturer addressed to the company, an officer thereof or an entity thereof that handles consumer matters, a manufacturer website that receives consumer complaints, a manufacturer electronic mail system that receives such information at the corporate level, or that are otherwise received by a unit within the manufacturer that receives consumer inquiries or complaints, including telephonic complaints, expressing dissatisfaction with a product, or relating the unsatisfactory performance of a product, or any actual or potential defect in a product, or any event that allegedly was caused by any actual or potential defect in a product, but not including a claim of any kind or a notice involving a fatality or injury.

Control (including the terms controlling, controlled by, and under common control with) means the possession, direct or indirect, of the power to direct or cause the direction of the management and policies of a person, whether through the ownership of voting securities, by contract, or otherwise.

Customer satisfaction campaign, consumer advisory, recall, or other activity involving the repair or replacement of motor vehicles or motor vehicle equipment means any communication by a manufacturer to, or made available to, more than one dealer, distributor, lessor, lessee, other manufacturer, or owner, whether in writing or by electronic means, relating to repair, replacement, or modification of a vehicle, component of a vehicle, item of equipment, or a component thereof, the manner in which a vehicle or child restraint system is to be maintained or operated (excluding promotional and marketing materials, customer satisfaction surveys, and operating instructions or owner's manuals that accompany the vehicle or child restraint system at the time of first sale); or advice or direction to a dealer or distributor to cease the delivery or sale of specified models of vehicles or equipment.

Dealer field report means a field report from a dealer or authorized service facility of a manufacturer of motor vehicles or motor vehicle equipment.

Electrical system means any electrical or electronic component of a motor vehicle that is not included in one of the other reporting categories enumerated in subpart C of this part, and specifically includes the battery, battery cables, alternator, fuses, and main body wiring harnesses of the motor vehicle and the ignition system, including the ignition switch and starter motor. The term also includes all associated switches, control units, connective elements (such as wiring harnesses, hoses, piping, etc.), and mounting elements (such as brackets, fasteners, etc.).

Engine and engine cooling means the component (e.g., motor) of a motor vehicle providing motive power to the vehicle, and includes the exhaust system (including the exhaust emission system), the engine control unit, engine lubrication system, and the underhood cooling system for that engine. This term also includes all associated switches, control units, connective elements (such as wiring harnesses, hoses, piping, etc.), and mounting elements (such as brackets, fasteners, etc.).

Equipment comprises original and replacement equipment: (1) *Original equipment* means an item of motor vehicle equipment (other than a tire) that was installed in or on a motor vehicle at the time of its delivery to the first purchaser if the item of equipment was installed on or in the motor vehicle at the time of its delivery to a dealer or distributor for distribution; or the item of equipment was installed by the dealer or distributor with the express authorization of the motor vehicle manufacturer.

(2) *Replacement equipment* means motor vehicle equipment other than original equipment, and tires.

Exterior lighting mean all the exterior lamps (including any interior-mounted center highmounted stop lamp if mounted in the interior of a vehicle), lenses, reflectors, and associated equipment of a motor vehicle, including all associated switches, control units, connective elements (such as wiring harnesses, piping, etc.), and mounting elements (such as brackets, fasteners, etc.).

Field report means a communication in writing, including communications in electronic form, from an employee or representative of a manufacturer of motor vehicles or motor vehicle equipment, a dealer or authorized service facility of such manufacturer, or an entity known to the manufacturer as owning or operating a fleet, to the manufacturer regarding the failure, malfunction, lack of durability, or other performance problem of a motor vehicle or motor vehicle equipment, or any part thereof, produced for sale by that manufacturer and transported beyond the direct control of the manufacturer, regardless of whether verified or assessed to be lacking in merit, but does not include any document covered by the attorney-client privilege or the work product exclusion.

Fire means combustion or burning of material in or from a vehicle as evidenced by flame. The term also includes, but is not limited to, thermal events and fire-related phenomena such as smoke and melt, but does not include events and phenomena associated with a normally functioning vehicle such as combustion of fuel within an engine or exhaust from an engine.

Fleet means more than ten motor vehicles of the same make, model, and model year.

Foreign country means a country other than the United States.

Foreign government means the central government of a foreign country as well as any political subdivision of that country.

Fuel system means all components of a motor vehicle used to receive and store fuel, and to transfer fuel between the vehicle's fuel storage, engine, or fuel emission systems. This term includes, but is not limited to, the fuel tank and filler cap, neck, and pipe, along with associated piping, hoses, and clamps, the fuel pump, fuel lines, connectors from the fuel tank to the engine, the fuel injection/carburetion system (including fuel injector rails and injectors), and the fuel vapor recovery system(s), canister(s), and vent lines. The term also includes all associated switches, control units, connective elements (such as wiring harnesses, hoses, piping, etc.), and mounting elements (such as brackets, fasteners, etc.).

Good will means the repair or replacement of a motor vehicle or item of motor vehicle equipment, including labor, paid for by the manufacturer, at least in part, when the repair or replacement is not covered under warranty, or under a safety recall reported to NHTSA under part 573 of this chapter.

Handle means any element of a child restraint system that is designed to facilitate carrying the restraint outside a motor vehicle, other than an element of the seat shell.

Incomplete light vehicle means an incomplete vehicle as defined in § 568.3 of this chapter which, when completed, will be a light vehicle.

Integrated child restraint system means a factory-installed built-in child restraint system as defined in S4 of § 571.213 of this chapter and includes any factory-authorized built-in child restraint system.

Latch means a latching, locking, or linking system of a motor vehicle and all its components fitted to a vehicle's exterior doors, rear hatch, liftgate, tailgate, trunk, or hood. This term also includes, but is not limited to, devices for the remote operation of a latching device such as remote release cables (and associated components), electric release devices, or wireless control release devices, and includes all components covered in FMVSS No. 206. This term also includes all associated switches, control units, connective elements (such as wiring harnesses, hoses, piping, etc.), and mounting elements (such as brackets, fasteners, etc.).

Light vehicle means any motor vehicle, except a bus, motorcycle, or trailer, with a GVWR of 10,000 lbs or less.

Make means a name that a manufacturer applies to a group of vehicles.

Manufacturer means a person manufacturing or assembling motor vehicles or motor vehicle equipment, or importing motor vehicles or motor vehicle equipment for resale. This term includes any parent corporation, any subsidiary or affiliate, and any subsidiary or affiliate of a parent corporation of such a person.

Medium-heavy vehicle means any motor vehicle, except a trailer, with a GVWR greater than 10,000 lbs.

Minimal specificity means:

(1) For a vehicle, the make, model, and model year,

(2) For a child restraint system, the manufacturer and the model (either the model name or model number),

(3) For a tire, the manufacturer, tire line, and tire size, and

(4) For other motor vehicle equipment, the manufacturer and, if there is a model or family of models identified on the item of equipment, the model name or model number.

Model means a name that a manufacturer of motor vehicles applies to a family of vehicles within a make which have a degree of commonality in construction, such as body, chassis or cab type. For equipment other than child restraint systems, it means the name that the manufacturer uses to designate it. For child restraint systems, it means the name that the manufacturer uses to identify child restraint systems with the same seat shell, buckle, base (if so equipped) and restraint system.

Model year means the year that a manufacturer uses to designate a discrete model of vehicle, irrespective of the calendar year in which the vehicle was manufactured. If the manufacturer has not assigned a model year, it means the calendar year in which the vehicle was manufactured.

Notice means a document, other than a media article, that does not include a demand for relief, and that a manufacturer receives from a person other than NHTSA.

Other safety campaign means an action in which a manufacturer communicates with owners and/or dealers in a foreign country with respect to conditions under which motor vehicles or equipment should be operated, repaired, or replaced that relate to safety (excluding promotional and marketing materials, customer satisfaction surveys, and operating instructions or owner's manuals that accompany the vehicle or child restraint system at the time of first sale); or advice or direction to a dealer or distributor to cease the delivery or sale of specified models of vehicles or equipment.

Parking brake means a mechanism installed in a motor vehicle which is designed to prevent the movement of a stationary motor vehicle, including all associated switches, control units, connective elements (such as wiring harnesses, hoses, piping, etc.), and mounting elements (such as brackets, fasteners, etc.).

Platform means the basic structure of a vehicle including, but not limited to, the majority of the floorpan or undercarriage, and elements of the engine compartment. The term includes a structure that a manufacturer designates as a platform. A group of vehicles sharing a common structure or chassis shall be considered to have a common platform regardless of whether such vehicles are of the same type, are of the same make, or are sold by the same manufacturer.

Power train means the components or systems of a motor vehicle which transfer motive power from the engine to the wheels, including the transmission (manual and automatic), gear selection devices and associated linkages, clutch, constant velocity joints, transfer case, driveline, differential(s), and all driven axle assemblies. This term includes all associated switches, control units, connective elements (such as wiring harnesses, hoses, piping, etc.), and mounting elements (such as brackets, fasteners, etc.).

Product evaluation report means a field report prepared by, and containing the observations or comments of, a manufacturer's employee who submitted the report concerning the operation or performance of a vehicle or child restraint system as part of the employee's personal use of the vehicle or child restraint system under a manufacturer's program authorizing such use, but does not include a report by an

employee who has been granted personal use of a vehicle or child restraint system for the specific purpose of facilitating the employee's technical or engineering evaluation of a known or suspected problem with that vehicle or child restraint system.

Production year means, for equipment and tires, the calendar year in which the item was produced.

Property damage means physical injury to tangible property.

Property damage claim means a claim for property damage, excluding that part of a claim, if any, pertaining solely to damage to a component or system of a vehicle or an item of equipment itself based on the alleged failure or malfunction of the component, system, or item, and further excluding matters addressed under warranty.

Rear-facing infant seat means a child restraint system that is designed to position a child to face only in the direction opposite to the normal direction of travel of the motor vehicle.

Reporting period means a calendar quarter of a year, unless otherwise stated.

Rollover means a single-vehicle crash in which a motor vehicle rotates on its longitudinal axis to at least 90 degrees, regardless of whether it comes to rest on its wheels.

Safety recall means an offer by a manufacturer to owners of motor vehicles or equipment in a foreign country to provide remedial action to address a defect that relates to motor vehicle safety or a failure to comply with an applicable safety standard or guideline, whether or not the manufacturer agrees to pay the full cost of the remedial action.

Seats means all components of a motor vehicle that are subject to FMVSS Nos. 202, 207, and 209, including all electrical and electronic components within the seat that are related to seat positioning, heating, and cooling. This term also includes all associated switches, control units, connective elements (such as wiring harnesses, hoses, piping, etc.), and mounting elements (such as brackets, fasteners, etc.).

Seat belts means any belt system, other than an air bag, that may or may not require the occupant to latch, fasten, or secure the components of the seat belt/webbing based restraint system to ready its use for protection of the occupant in the event of a vehicle crash. This term includes the webbing, buckle, anchorage, retractor, belt pretensioner devices, load limiters, and all components, hardware and software associated with an automatic or manual seat belt system addressed by FMVSS No. 209 or 210. This term also includes integrated child restraint systems in vehicles, and includes any device (and all components of that device), installed in a motor vehicle in accordance with FMVSS No. 213, which is designed for use as a safety restraint device for a child too small to use a vehicle's seat belts. This term includes all vehicle components installed in accordance with FMVSS No. 225. This term also includes all associated switches, control units, connective elements (such as wiring harnesses, hoses, piping, etc.), and mounting elements (such as brackets, fasteners, etc.).

Seat shell means the portion of a child restraint system that provides the structural shape, form and support for the system, and for other components of the system such as belt attachment points, and anchorage points to allow the system to be secured to a passenger seat in a motor vehicle, but not including a shield.

Service brake system means all components of the service braking system of a motor vehicle intended for the transfer of braking application force from the operator to the wheels of a vehicle, including the foundation braking system, such as the brake pedal, master cylinder, fluid lines and hoses, braking assist components, brake calipers, wheel cylinders, brake discs, brake drums, brake pads, brake shoes, and other related equipment installed in a motor vehicle in order to comply with FMVSS Nos. 105, 121, 122, or 135 (except equipment relating specifically to a parking brake). This term also includes systems and devices for automatic control of the brake system such as antilock braking, traction control, stability control, and enhanced braking. The term includes all associated switches, control units, connective elements (such as wiring harnesses, hoses,

piping, etc.), and mounting elements (such as brackets, fasteners, etc.).

Sidewall means the area of a tire between the tread and the bead area, including the sidewall rubber components, the body ply and its coating rubber under the side area, and the inner-liner rubber under the body ply in the side area.

SKU (Stock Keeping Unit) means the alpha-numeric designation assigned by a manufacturer to uniquely identify a tire product. This term is sometimes referred to as a product code, a product ID, or a part number.

Steering system means all steering control system components, including the steering system mechanism and its associated hardware, the steering wheel, steering column, steering shaft, linkages, joints (including tie-rod ends), steering dampeners, and power steering assist systems. This term includes a steering control system as defined by FMVSS No. 203 and any subsystem or component of a steering control system, including those components defined in FMVSS No. 204. This term also includes all associated switches, control units, connective elements (such as wiring harnesses, hoses, piping, etc.), and mounting elements (such as brackets, fasteners, etc.).

Structure means any part of a motor vehicle that serves to maintain the shape and size of the vehicle, including the frame, the floorpan, the body, bumpers, doors, tailgate, hatchback, trunk lid, hood, and roof. The term also includes all associated mounting elements (such as brackets, fasteners, etc.).

Suspension system means all components and hardware associated with a motor vehicle suspension system, including the associated control arms, steering knuckles, spindles, joints, bushings, ball joints, springs, shock absorbers, stabilizer (anti sway) bars, and bearings that are designed to minimize the impact on the vehicle chassis of shocks from road surface irregularities that may be transmitted through the wheels, and to provide stability when the vehicle is being operated through a range of speed, load, and dynamic conditions. The term also includes all electronic control systems and mechanisms for active suspension control, as well as all associated components such as switches, control units, connective elements (such as wiring harnesses, hoses, piping, etc.), and mounting elements (such as brackets, fasteners, etc.).

Tire means an item of motor vehicle equipment intended to interface between the road and a motor vehicle. The term includes all the tires of a vehicle, including the spare tire. For purposes of §§579.21 through 579.24 and §579.27 of this part, this term also includes the tire inflation valves, tubes, and tire pressure monitoring and regulating systems, as well as all associated switches, control units, connective elements (such as wiring harnesses, hoses, piping, etc.), and mounting elements (such as brackets, fasteners, etc.).

Tire line means the entire name used by a tire manufacturer to designate a tire product including all prefixes and suffixes as they appear on the sidewall of a tire.

Trailer hitch means all coupling systems, devices, and components thereof, designed to join or connect any two motor vehicles. This term also includes all associated switches, control units, connective elements (such as wiring harnesses, hoses, piping, etc.), and mounting elements (such as brackets, fasteners, etc.).

Tread (also known as crown) means all materials in the tread area of a tire including the rubber that makes up the tread, the sub-base rubber, when present, between the tread base and the top of the belts, the belt material, either steel and/or fabric, and the rubber coating of the same including any rubber inserts, the body ply and its coating rubber under the tread area of the tire, and the inner-liner rubber under the tread.

Type means, in the context of a light vehicle, a vehicle certified by its manufacturer pursuant to §567.4(g)(7) of this chapter as a passenger car, multipurpose passenger vehicle, or truck, or a vehicle identified by its manufacturer as an incomplete vehicle pursuant to §568.4 of this chapter. In the context of a medium heavy vehicle and bus, it means one of the following categories: Truck, tractor, transit bus, school bus, coach, recreational vehicle, emergency

vehicle, or other. In the context of a trailer, it means one of the following categories: Recreational trailers, van trailers, flatbed trailer, trailer converter dolly, lowbed trailer, dump trailer, tank trailer, dry bulk trailer, livestock trailer, boat trailer, auto transporter, or other. In the context of a child restraint system, it means the category of child restraint system selected from one of the following: rear-facing infant seat, booster seat, or other.

Vehicle speed control means the systems and components of a motor vehicle that control vehicle speed either by command of the operator or by automatic control, including, but not limited, to the accelerator pedal, linkages, cables, springs, speed control devices (such as cruise control) and speed limiting devices. This term includes, but is not limited to the items addressed by FMVSS No. 124 and all associated switches, control units, connective elements (such as wiring harnesses, hoses, piping, etc.), and mounting elements (such as brackets, fasteners, etc.).

Visibility means the systems and components of a motor vehicle through which a driver views the surroundings of the vehicle including windshield, side windows, back window, and rear view mirrors, and systems and components used to wash and wipe windshields and back windows. This term includes those vehicular systems and components that can affect the ability of the driver to clearly see the roadway and surrounding area, such as the systems and components identified in FMVSS Nos. 103, 104, and 111. This term also includes the defogger/defroster system, the heater core, blower fan, windshield wiper systems, mirrors, windows and glazing material, heads-up display (HUD) systems, and exterior view-based television systems, but does not include exterior lighting systems which are defined under ''Lighting.'' This term includes all associated switches, control units, connective elements (such as wiring harnesses, hoses, piping, etc.), and mounting elements (such as brackets, fasteners, etc.).

Warranty means any written affirmation of fact or written promise made in connection with the sale or lease of a motor vehicle or motor vehicle equipment by a manufacturer to a buyer or lessee that relates to the nature of the material or workmanship and affirms or promises that such material or workmanship is defect free or will meet a specified level of performance over a specified period of time (including any extensions of such specified period of time), or any undertaking in writing in connection with the sale or lease by a manufacturer of a motor vehicle or item of motor vehicle equipment to refund, repair, replace, or take other remedial action with respect to such product in the event that such product fails to meet the specifications set forth in the undertaking.

Warranty adjustment means any payment or other restitution, such as, but not limited to, replacement, repair, credit, or cash refund, made by a tire manufacturer to a consumer or to a dealer, in reimbursement for payment or other restitution to a consumer, pursuant to a warranty program offered by the manufacturer or goodwill.

Warranty claim means any claim paid by a manufacturer, including provision of a credit, pursuant to a warranty program, an extended warranty program, or good will. It does not include claims for reimbursement for costs or related expenses for work performed to remedy a safety-related defect or noncompliance reported to NHTSA under part 573 of this chapter, or in connection with a motor vehicle emissions-related recall under the Clean Air Act or in accordance with State law as authorized under 42 U.S.C. 7543(b) or 7507.

Wheel means the assembly or component of a motor vehicle to which a tire is mounted. The term includes any item of motor vehicle equipment used to attach the wheel to the vehicle, including inner cap nuts and the wheel studs, bolts, and nuts.

Work product means a document in the broad sense of the word, prepared in anticipation of litigation where there is a reasonable prospect of litigation and not for some other purpose such as a business practice, and prepared or requested by an attorney or an agent for an attorney.

(d) *Identical or substantially similar motor vehicle, item of motor vehicle equipment, or tire.* (1) A motor vehicle sold or in use outside the United States is

identical or substantially similar to a motor vehicle sold or offered for sale in the United States if—

(i) Such a vehicle has been sold in Canada or has been certified as complying with the Canadian Motor Vehicle Safety Standards;

(ii) Such a vehicle is listed in the VSP or VSA columns of appendix A to part 593 of this chapter;

(iii) Such a vehicle is manufactured in the United States for sale in a foreign country; or

(iv) Such a vehicle uses the same vehicle platform as a vehicle sold or offered for sale in the United States.

(2) An item of motor vehicle equipment sold or in use outside the United States is identical or substantially similar to equipment sold or offered for sale in the United States if such equipment and the equipment sold or offered for sale in the United States have one or more components or systems that are the same, and the component or system performs the same function in vehicles or equipment sold or offered for sale in the United States, regardless of whether the part numbers are identical.

(3) A tire sold or in use outside the United States is substantially similar to a tire sold or offered for sale in the United States if it has the same size, speed rating, load index, load range, number of plies and belts, and similar ply and belt construction and materials, placement of components, and component materials, irrespective of plant of manufacture or tire line.

[43 FR 38833, Aug. 31, 1978, as amended at 67 FR 63310, Oct. 11, 2002; 68 FR 4113, Jan. 28, 2003; 68 FR 18142, Apr. 15, 2003; 68 FR 35142, June 11, 2003; 69 FR 20557, Apr. 16, 2004; 72 FR 29443, May 29, 2007; 74 FR 47757, Sept. 17, 2009]

§579.5 Notices, bulletins, customer satisfaction campaigns, consumer advisories, and other communications.

(a) Each manufacturer shall furnish to NHTSA's Early Warning Division (NVS–217) a copy of all notices, bulletins, and other communications (including those transmitted by computer, telefax, or other electronic means and including warranty and policy extension communiqués and product improvement bulletins) other than those required to be submitted pursuant to §573.6(c)(10) of this chapter, sent to more than one manufacturer, distributor, dealer, lessor, lessee, owner, or purchaser, in the United States, regarding any defect in its vehicles or items of equipment (including any failure or malfunction beyond normal deterioration in use, or any failure of performance, or any flaw or unintended deviation from design specifications), whether or not such defect is safety-related.

(b) Each manufacturer shall furnish to NHTSA a copy of each communication relating to a customer satisfaction campaign, consumer advisory, recall, or other safety activity involving the repair or replacement of motor vehicles or equipment, that the manufacturer issued to, or made available to, more than one dealer, distributor, lessor, lessee, other manufacturer, owner, or purchaser, in the United States.

(c) If a notice or communication is required to be submitted under both paragraphs (a) and (b) of this section, it need only be submitted once.

(d) Each copy shall be in readable form and shall be submitted not later than five working days after the end of the month in which it is issued. However, a document described in paragraph (b) of this section and issued before July 1, 2003, need not be submitted.

[67 FR 45873, July 10, 2002, as amended at 68 FR 18142, Apr. 15, 2003; 68 FR 35147, June 11, 2003; 69 FR 49823, Aug. 12, 2004; 72 FR 32017, June 11, 2007]

§579.6 Address for submitting reports and other information.

(a) Except as provided by paragraph (b) of this section, information, reports, and documents required to be submitted to NHTSA pursuant to this part may be submitted by mail, by facsimile, or by e-mail. If submitted by mail, they must be addressed to the Associate Administrator for Enforcement, National Highway Traffic Safety Administration, Attention: Early Warning Division (NVS–217), 1200 New Jersey Avenue, SE., Washington, DC 20590. If submitted by facsimile, they must be addressed to the Associate Administrator for Enforcement and transmitted to (202) 366–7882. If submitted by

e-mail, submissions under subpart B of this part must be submitted to *frecalls@dot.gov* and submissions under § 579.5 must be submitted to *tsb@dot.gov*.

(b) Information, documents and reports that are submitted to NHTSA's early warning data repository must be submitted in accordance with § 579.29 of this part. Submissions must be made by a means that permits the sender to verify that the report was in fact received by NHTSA and the day it was received by NHTSA.

[68 FR 4113, Jan. 28, 2003, as amended at 72 FR 32017, June 11, 2007]

§§ 579.7–579.10 [Reserved]

Subpart B—Reporting of Safety Recalls and Other Safety Campaigns in Foreign Countries

SOURCE: 67 FR 63310, Oct. 11, 2002, unless otherwise noted.

§ 579.11 Reporting responsibilities.

(a) *Determination by a manufacturer*. Not later than 5 working days after a manufacturer determines to conduct a safety recall or other safety campaign in a foreign country covering a motor vehicle, item of motor vehicle equipment, or tire that is identical or substantially similar to a vehicle, item of equipment, or tire sold or offered for sale in the United States, the manufacturer shall report the determination to NHTSA. For purposes of this paragraph, this period is determined by reference to the general business practices of the office in which such determination is made, and the office reporting to NHTSA.

(b) *Determination by a foreign government*. Not later than 5 working days after a manufacturer receives written notification that a foreign government has determined that a safety recall or other safety campaign must be conducted in its country with respect to a motor vehicle, item of motor vehicle equipment, or tire that is identical or substantially similar to a vehicle, item of equipment, or tire sold or offered for sale in the United States, the manufacturer shall report the determination to NHTSA. For purposes of this paragraph, this period is determined by reference to the general business practices of the office where the manufacturer receives such notification, the manufacturer's international headquarters office (if involved), and the office reporting to NHTSA.

(c) *One-time historical reporting*. Not later than 30 calendar days after November 12, 2002, a manufacturer that has made a determination to conduct a recall or other safety campaign in a foreign country, or that has received written notification that a foreign government has determined that a safety recall or other safety campaign must be conducted in its country in the period between November 1, 2000 and November 12, 2002, and that has not reported such determination or notification of determination to NHTSA in a report that identified the model(s) and model year(s) of the vehicles, equipment, or tires that were the subject of the foreign recall or other safety campaign, the model(s) and model year(s) of the vehicles, equipment, or tires that were identical or substantially similar to the subject of the recall or campaign, and the defect or other condition that led to the foreign recall or campaign, as of November 12, 2002, shall report such determination or notification of determination to NHTSA if the safety recall or other safety campaign covers a motor vehicle, item of motor vehicle equipment, or tire that is identical or substantially similar to a vehicle, item of equipment, or tire sold or offered for sale in the United States. However, a report need not be resubmitted under this paragraph if the original report identified the model(s) and model year(s) of the vehicles, equipment, or tires that were the subject of the foreign recall or other safety campaign, identified the model(s) and model year(s) of the identical or substantially similar products in the United States, and identified the defect or other condition that led to the foreign recall or other safety campaign.

(d) *Exemptions from reporting*. Notwithstanding paragraphs (a), (b), and (c) of this section a manufacturer need not report a foreign safety recall or other safety campaign to NHTSA if:

(1) The manufacturer has determined that for the same or substantially similar reasons relating to motor vehicle safety that it is conducting a safety recall or other safety campaign in a foreign country, a safety-related defect or noncompliance with a Federal motor vehicle safety standard exists in identical or substantially similar motor vehicles, motor vehicle equipment, or tires sold or offered for sale in the United States, and has filed a defect or noncompliance information report pursuant to part 573 of this chapter, provided that the scope of the foreign recall or campaign is not broader than the scope of the recall campaign in the United States;

(2) The component or system that gave rise to the foreign recall or other campaign does not perform the same function in any substantially similar vehicles or equipment sold or offered for sale in the United States; or

(3) The sole subject of the foreign recall or other campaign is a label affixed to a vehicle, item of equipment, or a tire.

(e) *Annual list of substantially similar vehicles.* Not later than November 1 of each year, each manufacturer of motor vehicles that sells or offers a motor vehicle for sale in the United States shall submit to NHTSA a document that identifies both each model of motor vehicle that the manufacturer sells or plans to sell during the following year in a foreign country that the manufacturer believes is identical or substantially similar to a motor vehicle sold or offered for sale in the United States (or to a motor vehicle that is planned for sale in the United States in the following year), and each such identical or substantially similar motor vehicle sold or offered for sale in the United States. Not later than 30 days after January 28, 2003, each manufacturer to which this paragraph applies shall submit an initial annual list of vehicles for calendar year 2003 that meets the requirements of this paragraph.

[67 FR 63310, Oct. 11, 2002, as amended at 68 FR 4113, Jan. 28, 2003]

§ 579.12 Contents of reports.

(a) Each report made pursuant to § 579.11 of this part must be dated and must include the information specified in § 573.6(c)(1), (c)(2), (c)(3), and (c)(5) of this chapter. Each such report must also identify each foreign country in which the safety recall or other safety campaign is being conducted, state whether the foreign action is a safety recall or other safety campaign, state whether the determination to conduct the recall or campaign was made by the manufacturer or by a foreign government, describe the manufacturer's program for remedying the defect or noncompliance (if the action is a safety recall), specify the date of the determination and the date the recall or other campaign was commenced or will commence in each foreign country, and identify all motor vehicles, equipment, or tires that the manufacturer sold or offered for sale in the United States that are identical or substantially similar to the motor vehicles, equipment, or tires covered by the foreign recall or campaign. If a determination has been made by a foreign government, the report must also include a copy of the determination in the original language and, if the determination is in a language other than English, a copy translated into English.

(b) Information required by paragraph (a) of this section that is not available within the 5-working day period specified in § 579.11 of this part shall be submitted as it becomes available.

§§ 579.13–579.20 [Reserved]

Subpart C—Reporting of Early Warning Information

§ 579.21 Reporting requirements for manufacturers of 5,000 or more light vehicles annually.

For each reporting period, a manufacturer whose aggregate number of light vehicles manufactured for sale, sold, offered for sale, introduced or delivered for introduction in interstate commerce, or imported into the United States, during the calendar year of the reporting period or during each of the prior two calendar years is 5,000 or more shall submit the information described in this section. For paragraphs (a) and (c) of this section, the manufacturer shall submit information separately with respect to each make,

model, and model year of light vehicle manufactured during the reporting period and the nine model years prior to the earliest model year in the reporting period, including models no longer in production.

(a) *Production information.* Information that states the manufacturer's name, the quarterly reporting period, the make, the model, the model year, the type, the platform, and the production. The production shall be stated as either the cumulative production of the current model year to the end of the reporting period, or the total model year production for each model year for which production has ceased.

(b) *Information on incidents involving death or injury.* For all light vehicles manufactured during a model year covered by the reporting period and the nine model years prior to the earliest model year in the reporting period:

(1) A report on each incident involving one or more deaths or injuries occurring in the United States that is identified in a claim against and received by the manufacturer or in a notice received by the manufacturer which notice alleges or proves that the death or injury was caused by a possible defect in the manufacturer's vehicle, together with each incident involving one or more deaths occurring in a foreign country that is identified in a claim against and received by the manufacturer involving the manufacturer's vehicle, if that vehicle is identical or substantially similar to a vehicle that the manufacturer has offered for sale in the United States. The report shall be submitted as a report on light vehicles and organized such that incidents are reported alphabetically by make, within each make alphabetically by model, and within each model chronologically by model year.

(2) For each incident described in paragraph (b)(1) of this section, the manufacturer shall separately report the make, model, model year, and VIN of the vehicle, the incident date, the number of deaths, the number of injuries for incidents occurring in the United States, the State or foreign country where the incident occurred, each system or component of the vehicle that allegedly contributed to the incident, and whether the incident involved a fire or rollover, coded as follows: 01 steering system, 02 suspension system, 03 service brake system, 05 parking brake, 06 engine and engine cooling system, 07 fuel system, 10 power train, 11 electrical system, 12 exterior lighting, 13 visibility, 14 air bags, 15 seat belts, 16 structure, 17 latch, 18 vehicle speed control, 19 tires, 20 wheels, 22 seats, 23 fire, 24 rollover, 98 where a system or component not covered by categories 01 through 22 is specified in the claim or notice, and 99 where no system or component of the vehicle is specified in the claim or notice. If an incident involves more than one such code, each shall be reported separately in the report with a limit of five codes to be included.

(c) *Numbers of property damage claims, consumer complaints, warranty claims, and field reports.* Separate reports on the numbers of those property damage claims, consumer complaints, warranty claims, and field reports which involve the systems and components that are specified in codes 01 through 22 in paragraph (b)(2) of this section, or a fire (code 23), or rollover (code 24). Each such report shall state, separately by each such code, the number of such property damage claims, consumer complaints, warranty claims, or field reports, respectively, that involves the systems or components or fire or rollover indicated by the code. If an underlying property damage claim, consumer complaint, warranty claim, or field report involves more than one such code, each shall be reported separately in the report with no limit on the number of codes to be included. No reporting is necessary if the system or component involved is not specified in such codes, and the incident did not involve a fire or rollover.

(d) *Copies of field reports.* For all light vehicles manufactured during a model year covered by the reporting period and the nine model years prior to the earliest model year in the reporting period, a copy of each field report (other than a dealer report or a product evaluation report) involving one or more of the systems or components identified in paragraph (b)(2) of this section, or

fire, or rollover, containing any assessment of an alleged failure, malfunction, lack of durability, or other performance problem of a motor vehicle or item of motor vehicle equipment (including any part thereof) that is originated by an employee or representative of the manufacturer and that the manufacturer received during a reporting period. These documents shall be submitted alphabetically by make, within each make alphabetically by model, and within each model chronologically by model year. For purposes of this paragraph, if a field report refers to more than one make or model of light vehicle produced by a manufacturer on a particular platform, the manufacturer shall submit the report alphabetically by platform rather than by make or model. If such a field report refers to more than one platform, separate copies shall be submitted for each such platform. If a field report refers to more than one model year of a specified make/model or platform, the manufacturer shall submit it by the earliest model year to which it refers.

[67 FR 45873, July 10, 2002, as amended at 68 FR 18142, Apr. 15, 2003; 68 FR 35142, June 11, 2003; 72 FR 29443, May 29, 2007; 74 FR 47757, Sept. 17, 2009]

§ 579.22 Reporting requirements for manufacturers of 100 or more buses, manufacturers of 500 or more emergency vehicles and manufacturers of 5,000 or more medium-heavy vehicles (other than buses and emergency vehicles) annually.

For each reporting period, a manufacturer whose aggregate number of buses manufactured for sale, sold, offered for sale, introduced or delivered for introduction in interstate commerce, or imported into the United States, during the calendar year of the reporting period or during either of the prior two calendar years is 100 or more shall submit the information described in this section. For each reporting period, a manufacturer whose aggregate number of emergency vehicles (ambulances and fire trucks) manufactured for sale, sold, offered for sale, introduced or delivered for introduction in interstate commerce, or imported into the United States, during the calendar year of the reporting period or during either of the prior two calendar years is 500 or more shall submit the information described in this section. For each reporting period, a manufacturer whose aggregate number of medium-heavy vehicles (a sum that does not include buses or emergency vehicles) manufactured for sale, sold, offered for sale, introduced or delivered for introduction in interstate commerce, or imported into the United States, during the calendar year of the reporting period or during either of the prior two calendar years is 5,000 or more shall submit the information described in this section. For paragraphs (a) and (c) of this section, the manufacturer shall submit information separately with respect to each make, model, and model year of bus, emergency vehicle and/or medium-heavy vehicle manufactured during the reporting period and the nine model years prior to the earliest model year in the reporting period, including models no longer in production.

(a) *Production information.* Information that states the manufacturer's name, the quarterly reporting period, the make, the model, the model year, the type, and the production. The production shall be stated as either the cumulative production of the current model year to the end of the reporting period, or the total model year production for each model year for which production has ceased. For each model that is manufactured and available with more than one type of fuel system (i.e., gasoline, diesel, or other (including vehicles that can be operated using more than one type of fuel, such as gasoline and compressed natural gas)), the information required by this subsection shall be reported separately by each of the three fuel system types. For each model that is manufactured and available with more than one type of service brake system (i.e., hydraulic or air), the information required by this subsection shall be reported by each of the two brake types. If the service brake system in a vehicle is not readily characterized as either hydraulic or air, the vehicle shall be considered to have hydraulic service brakes.

(b) *Information on incidents involving death or injury.* For all buses, emergency vehicles and medium heavy vehicles manufactured during a model year covered by the reporting period and the nine model years prior to the earliest model year in the reporting period:

(1) A report on each incident involving one or more deaths or injuries occurring in the United States that is identified in a claim against and received by the manufacturer or in a notice received by the manufacturer which notice alleges or proves that the death or injury was caused by a possible defect in the manufacturer's vehicle, together with each incident involving one or more deaths occurring in a foreign country that is identified in a claim against and received by the manufacturer involving the manufacturer's vehicle, if that vehicle is identical or substantially similar to a vehicle that the manufacturer has offered for sale in the United States. The report shall be submitted as a report on medium-heavy vehicles and buses and organized such that incidents are reported alphabetically by make, within each make alphabetically by model, and within each model chronologically by model year.

(2) For each incident described in paragraph (b)(1) of this section, the manufacturer shall separately report the make, model, model year, and VIN of the medium-heavy vehicle or bus, the incident date, the number of deaths, the number of injuries for incidents occurring in the United States, the State or foreign country where the incident occurred, each system or component of the vehicle that allegedly contributed to the incident, and whether the incident involved a fire or rollover, coded as follows: 01 steering system, 02 suspension system, 03 service brake system, hydraulic, 04 service brake system, air, 05 parking brake, 06 engine and engine cooling system, 07 fuel system, gasoline, 08 fuel system, diesel, 09 fuel system, other, 10 power train, 11 electrical, 12 exterior lighting, 13 visibility, 14 air bags, 15 seat belts, 16 structure, 17 latch, 18 vehicle speed control, 19 tires, 20 wheels, 21 trailer hitch, 22 seats, 23 fire, 24 rollover, 98 where a system or component not covered by categories 01 through 22 is specified in the claim or notice, and 99 where no system or component of the vehicle is specified in the claim or notice. If an incident involves more than one such code, each shall be reported separately in the report with a limit of five codes to be included.

(c) *Numbers of property damage claims, consumer complaints, warranty claims, and field reports.* Separate reports on the numbers of those property damage claims, consumer complaints, warranty claims, and field reports which involve the systems and components that are specified in codes 01 through 22 in paragraph (b)(2) of this section, or a fire (code 23), or rollover (code 24). Each such report shall state, separately by each such code, the number of such property damage claims, consumer complaints, warranty claims, or field reports, respectively, that involves the systems or components or fire or rollover indicated by the code. If an underlying property damage claim, consumer complaint, warranty claim, or field report involves more than one such code, each shall be reported separately in the report with no limit on the number of codes to be included. No reporting is necessary if the system or component involved is not specified in such codes, and the incident did not involve a fire or rollover.

(d) *Copies of field reports.* For all medium heavy vehicles and buses manufactured during a model year covered by the reporting period and the nine model years prior to the earliest model year in the reporting period, a copy of each field report (other than a dealer report or a product evaluation report) involving one or more of the systems or components identified in paragraph (b)(2) of this section, or fire, or rollover, containing any assessment of an alleged failure, malfunction, lack of durability, or other performance problem of a motor vehicle or item of motor vehicle equipment (including any part thereof) that is originated by an employee or representative of the manufacturer and that the manufacturer received during a reporting period. These documents shall be submitted alphabetically by make, within each make alphabetically by model, and within each model chronologically by model year. For purposes of this

paragraph, if a field report refers to more than one make or model of vehicle produced by a manufacturer on a particular platform, the manufacturer shall submit the report alphabetically by platform rather than by make or model. If such a field report refers to more than one platform, separate copies shall be submitted for each such platform. If a field report refers to more than one model year of a specified make/model or platform, the manufacturer shall submit it by the earliest model year to which it refers.

[67 FR 45873, July 10, 2002, as amended at 68 FR 18142, Apr. 15, 2003; 68 FR 35143, June 11, 2003; 72 FR 29443, May 29, 2007; 74 FR 47757, Sept. 17, 2009]

§ 579.23 Reporting requirements for manufacturers of 5,000 or more motorcycles annually.

For each reporting period, a manufacturer whose aggregate number of motorcycles manufactured for sale, sold, offered for sale, introduced or delivered for introduction in interstate commerce, or imported into the United States, during the calendar year of the reporting period or during either of the prior two calendar years is 5,000 or more shall submit the information described in this section. For paragraphs (a) and (c) of this section, the manufacturer shall submit information separately with respect to each make, model, and model year of motorcycle manufactured during the reporting period and the nine model years prior to the earliest model year in the reporting period, including models no longer in production.

(a) *Production information.* Information that states the manufacturer's name, the quarterly reporting period, the make, the model, the model year, and the production. The production shall be stated as either the cumulative production of the current model year to the end of the reporting period, or the total model year production for each model year for which production has ceased.

(b) *Information on incidents involving death or injury.* For all motorcycles manufactured during a model year covered by the reporting period and the nine model years prior to the earliest model year in the reporting period:

(1) A report on each incident involving one or more deaths or injuries occurring in the United States that is identified in a claim against and received by the manufacturer or in a notice received by the manufacturer which notice alleges or proves that the death or injury was caused by a possible defect in the manufacturer's motorcycle, together with each incident involving one or more deaths occurring in a foreign country that is identified in a claim against and received by the manufacturer involving the manufacturer's motorcycle, if that motorcycle is identical or substantially similar to a motorcycle that the manufacturer has offered for sale in the United States. The report shall be submitted as a report on motorcycles and organized such that incidents are reported alphabetically by make, within each make alphabetically by model, and within each model chronologically by model year.

(2) For each incident described in paragraph (b)(1) of this section, the manufacturer shall separately report the make, model, model year, and VIN of the motorcycle, the incident date, the number of deaths, the number of injuries for incidents occurring in the United States, the State or foreign country where the incident occurred, each system or component of the motorcycle that allegedly contributed to the incident, and whether the incident involved a fire, coded as follows: 01 steering, 02 suspension, 03 service brake system, 06 engine and engine cooling, 07 fuel system, 10 power train, 11 electrical, 12 exterior lighting, 16 structure,18 vehicle speed control, 19 tires, 20 wheels, 23 fire, 98 where a system or component not covered by categories 01 through 20 is specified in the claim or notice, and 99 where no system or component of the vehicle is specified in the claim or notice. If an incident involves more than one such code, each shall be reported separately in the report with a limit of five codes to be included.

(c) *Numbers of property damage claims, consumer complaints, warranty claims, and field reports.* Separate reports on the numbers of those property damage claims, consumer complaints, warranty claims, and field reports which involve

the systems and components that are specified in codes 01 through 20 in paragraph (b)(2) of this section, or a fire (code 23). Each such report shall state, separately by each such code, the number of such property damage claims, consumer complaints, warranty claims, or field reports, respectively, that involves the systems or components or fire indicated by the code. If an underlying property damage claim, consumer complaint, warranty claim, or field report involves more than one such code, each shall be reported separately in the report with no limit on the number of codes to be included. No reporting is necessary if the system or component involved is not specified in such codes, and the incident did not involve a fire.

(d) *Copies of field reports.* For all motorcycles manufactured during a model year covered by the reporting period and the nine model years prior to the earliest model year in the reporting period, a copy of each field report (other than a dealer report or a product evaluation report) involving one or more of the systems or components identified in paragraph (b)(2) of this section or fire, containing any assessment of an alleged failure, malfunction, lack of durability, or other performance problem of a motorcycle or item of motor vehicle equipment (including any part thereof) that is originated by an employee or representative of the manufacturer and that the manufacturer received during a reporting period. These documents shall be submitted alphabetically by make, within each make alphabetically by model, and within each model chronologically by model year. For purposes of this paragraph, if a field report refers to more than one make or model of motorcycle produced by a manufacturer on a particular platform, the manufacturer shall submit the report alphabetically by platform rather than by make or model. If such a field report refers to more than one platform, separate copies shall be submitted for each such platform. If a field report refers to more than one model year of a specified make/model or platform, the manufacturer shall submit it by the earliest model year to which it refers.

[67 FR 45873, July 10, 2002, as amended at 68 FR 18142, Apr. 15, 2003; 68 FR 35143, June 11, 2003; 72 FR 29443, May 29, 2007; 74 FR 47758, Sept. 17, 2009]

§ 579.24 Reporting requirements for manufacturers of 5,000 or more trailers annually.

For each reporting period, a manufacturer whose aggregate number of trailers manufactured for sale, sold, offered for sale, introduced or delivered for introduction in interstate commerce, or imported into the United States, during the calendar year of the reporting period or during either of the prior two calendar years is 5,000 or more shall submit the information described in this section. For paragraphs (a) and (c) of this section, the manufacturer shall submit information with respect to each make, model and model year of trailer manufactured during the reporting period and the nine model years prior to the earliest model year in the reporting period, including models no longer in production.

(a) *Production information.* Information that states the manufacturer's name, the quarterly reporting period, the make, the model, the model year, the type, and the production. The production shall be stated as either the cumulative production of the current model year to the end of the reporting period, or the total model year production for each model year for which production has ceased. For each model that is manufactured and available with more than one type of service brake system (*i.e.*, hydraulic and air), the information required by this subsection shall be reported by each of the two brake types (*i.e.*, ''H'' for hydraulic, ''A'' for air). If the service brake system in a trailer is not readily characterized as either hydraulic or air, the trailer shall be considered to have hydraulic service brakes. If a model has no brake system, it shall be reported as ''N,'' for none.

(b) *Information on incidents involving death or injury.* For all trailers manufactured during a model year covered by the reporting period and the nine model years prior to the earliest model year in the reporting period:

(1) A report on each incident involving one or more deaths or injuries occurring in the United States that is identified in a claim against and received by the manufacturer or in a notice received by the manufacturer which notice alleges or proves that the death or injury was caused by a possible defect in the manufacturer's trailer, together with each incident involving one or more deaths occurring in a foreign country that is identified in a claim against and received by the manufacturer involving the manufacturer's trailer, if that trailer is identical or substantially similar to a trailer that the manufacturer has offered for sale in the United States. The report shall be submitted as a report on trailers and organized such that incidents are reported alphabetically by make, with each make alphabetically by model, and within each model chronologically by model year.

(2) For each incident described in paragraph (b)(1) of this section, the manufacturer shall separately report the make, model, model year, and VIN of the trailer, the incident date, the number of deaths, the number of injuries for incidents occurring in the United States, the State or foreign country where the incident occurred, each system or component of the trailer that allegedly contributed to the incident, and whether the incident involved a fire, coded as follows: 02 suspension, 03 service brake system, hydraulic, 04 service brake system, air, 05 parking brake, 11 electrical, 12 exterior lighting, 16 structure, 17 latch, 19 tires, 20 wheels, 21 trailer hitch, 23 fire, 98 where a system or component not covered by categories 02 through 21 is specified in the claim or notice, and 99 where no system or component of the trailer is specified in the claim or notice. If an incident involves more than one such code, each shall be reported separately in the report with a limit of five codes to be included.

(c) *Numbers of property damage claims, consumer complaints, warranty claims, and field reports.* Separate reports on the numbers of those property damage claims, consumer complaints, warranty claims, and field reports which involve the systems and components that are specified in codes 02 through 21 in paragraph (b)(2) of this section, or a fire (code 23). Each such report shall state, separately by each such code, the number of such property damage claims, consumer complaints, warranty claims, or field reports, respectively, that involves the systems or components or fire indicated by the code. If an underlying property damage claim, consumer complaint, warranty claim, or field report involves more than one such code, each shall be reported separately in the report with no limit on the number of codes to be included. No reporting is necessary if the system or component involved is not specified in such codes, and the incident did not involve a fire.

(d) *Copies of field reports.* For all trailers manufactured during a model year covered by the reporting period and the nine model years prior to the earliest model year in the reporting period, a copy of each field report (other than a dealer report or a product evaluation report) involving one or more of the systems or components identified in paragraph (b)(2) of this section or fire, containing any assessment of an alleged failure, malfunction, lack of durability, or other performance problem of a trailer or item of motor vehicle equipment (including any part thereof) that is originated by an employee or representative of the manufacturer and that the manufacturer received during a reporting period. These documents shall be submitted alphabetically by make, within each make alphabetically by model, and within each model chronologically by model year. For purposes of this paragraph, if a field report refers to more than one make or model of trailer produced by a manufacturer on a particular platform, the manufacturer shall submit the report alphabetically by platform rather than by make or model. If such a field report refers to more than one platform, separate copies shall be submitted for each such platform. If a field report refers to more than one model year of a specified make/model or platform, the manufacturer shall submit it by the earliest model year to which it refers.

[67 FR 45873, July 10, 2003, as amended at 68 FR 18143, Apr. 15, 2003; 68 FR 35143, June 11, 2003; 72 FR 29443, May 29, 2007; 74 FR 47758, Sept. 17, 2009]

§ 579.25 Reporting requirements for manufacturers of child restraint systems.

For each reporting period, a manufacturer who has manufactured for sale, sold, offered for sale, introduced or delivered for introduction in interstate commerce, or imported child restraint systems into the United States, shall submit the information described in this section. For paragraphs (a) and (c) of this section, the manufacturer shall submit information separately with respect to each make, model, and production year of child restraint system manufactured during the reporting period and the four production years prior to the earliest production year in the reporting period, including models no longer in production. For paragraph (c) of this section, if any consumer complaints or warranty claims regarding a model of child restraint system do not specify the production year of the system, the manufacturer shall submit information for ''unknown'' production year in addition to the up-to-five production years for which the manufacturer must otherwise report the number of such consumer complaints/warranty claims.

(a) *Production information.* Information that states the manufacturer's name, the quarterly reporting period, the make, the model, the production year, the type, and the production. The production shall be stated as either the cumulative production of the current model year to the end of the reporting period, or the total calendar year production for each calendar year for which production has ceased.

(b) *Information on incidents involving death or injury.* For all child restraint systems manufactured during a production year covered by the reporting period and the four production years prior to the earliest production year in the reporting period:

(1) A report on each incident involving one or more deaths or injuries occurring in the United States that is identified in a claim against and received by the manufacturer or in a notice received by the manufacturer which notice alleges or proves that the death or injury was caused by a possible defect in the manufacturer's child restraint system, together with each incident involving one or more deaths occurring in a foreign country that is identified in a claim against and received by the manufacturer involving the manufacturer's child restraint system, if the child restraint system is identical or substantially similar to a child restraint system that the manufacturer has offered for sale in the United States. The report shall be submitted as a report on child restraint systems and organized such that incidents are reported alphabetically by make, within each make alphabetically by model, and within each model chronologically by production year.

(2) For each such incident described in paragraph (b)(1) of this section, the manufacturer shall separately report the make, model, and production year of the child restraint system, the incident date, the number of deaths, the number of injuries for incidents occurring in the United States, the State or foreign country where the incident occurred, and each system or component of the child restraint system that allegedly contributed to the incident, coded as follows: 51 buckle and restraint harness, 52 seat shell, 53 handle, 54 base, 98 where a system or component not covered by categories 51 through 54 is specified in the claim or notice, and 99 where no system or component of the child restraint system is specified in the claim or notice. If an incident involves more than one such code, each shall be reported separately in the report. If the production year of the child restraint system is unknown, the manufacturer shall specify the number ''9999'' in the field for production year.

(c) *Numbers of consumer complaints and warranty claims, and field reports.* Separate reports on the numbers of those consumer complaints and warranty claims, and field reports, which involve the systems and components that are specified in codes 51 through 54 in paragraph (b)(2) of this section. Each such report shall state, separately by each such code, the number of such consumer complaints and warranty claims, or field reports, respectively, that involves the systems or components indicated by the code. If an underlying consumer complaint and

warranty claim, or field report, involves more than one such code, each shall be counted separately in the report with no limit on the number of codes to be included. No reporting is necessary if the system or component involved is not specified in such codes.

(d) *Copies of field reports.* For all child restraint systems manufactured during a production year covered by the reporting period and the four production years prior to the earliest production year in the reporting period, a copy of each field report (other than a dealer report or a product evaluation report) involving one or more of the systems or components identified in paragraph (b)(2) of this section, containing any assessment of an alleged failure, malfunction, lack of durability, or other performance problem of a child restraint system (including any part thereof) that is originated by an employee or representative of the manufacturer and that the manufacturer received during a reporting period. These documents shall be submitted alphabetically by make, within each make alphabetically by model, and within each model chronologically by production year. For purposes of this paragraph, if a field report refers to more than one make or model of child restraint system produced by a manufacturer, the manufacturer shall submit the report under the first such model in alphabetical order. If a field report refers to more than one production year of a specified make/model, the manufacturer shall submit it by the earliest production year to which it refers.

[67 FR 45873, July 10, 2002, as amended at 68 FR 18143, Apr. 15, 2003; 68 FR 35144, June 11, 2003; 72 FR 29444, May 29, 2007]

§ 579.26 Reporting requirements for manufacturers of tires.

For each reporting period, a manufacturer (including a brand name owner) who has manufactured for sale, sold, offered for sale, introduced or delivered for introduction in interstate commerce, or imported tires in the United States shall submit the information described in this section. For purposes of this section, an importer of motor vehicles for resale is deemed to be the manufacturer of the tires on and in the vehicle at the time of its importation if the manufacturer of the tires is not required to report under this section. For paragraphs (a) and (c) of this section, the manufacturer shall submit information separately with respect to each tire line, size, SKU, plant where manufactured, and model year of tire manufactured during the reporting period and the four calendar years prior to the reporting period, including tire lines no longer in production. For each group of tires with the same SKU, plant where manufactured, and year for which the volume produced or imported is less than 15,000, or are deep tread, winter-type snow tires, spacesaver or temporary use spare tires, tires with nominal rim diameters of 12 inches or less, or are not passenger car tires, light truck tires, or motorcycle tires, the manufacturer need only report information on incidents involving a death or injury, as specified in paragraph (b) of this section. For purposes of this section, the two-character DOT alphanumeric code for production plants located in the United States assigned by NHTSA in accordance with §§ 574.5(a) and 574.6(b) of this chapter may be used to identify ''plant where manufactured.'' If the production plant is located outside the United States, the full plant name must be provided.

(a) *Production information.* Information that states the manufacturer's name, the quarterly reporting period, the tire line, the tire size, the tire type code, the SKU, the plant where manufactured, whether the tire is approved for use as original equipment on a motor vehicle, if so, the make, model, and model year of each vehicle for which it is approved, the production year, the cumulative warranty production, and the cumulative total production through the end of the reporting period. If the manufacturer knows that a particular group of tires is not used as original equipment on a motor vehicle, it shall state ''N'' in the appropriate field, and if the manufacturer is not certain, it shall state ''U'' in that field.

(b) *Information on incidents involving death or injury.* For all tires manufactured during a production year covered by the reporting period and the four production years prior to the earliest

production year in the reporting period:

(1) A report on each incident involving one or more deaths or injuries occurring in the United States that is identified in a claim against and received by the manufacturer or in a notice received by the manufacturer which notice alleges or proves that the death or injury was caused by a possible defect in the manufacturer's tire, together with each incident involving one or more deaths occurring in a foreign country that is identified in a claim against and received by the manufacturer involving the manufacturer's tire, if that tire is identical or substantially similar to a tire that the manufacturer has offered for sale in the United States. The report shall be submitted as a report on tires and organized such that incidents are reported alphabetically by tire line, within each tire line by tire size, and within each tire size chronologically by production year.

(2) For each such incident described in paragraph (b)(1) of this section, the manufacturer shall separately report the tire line, size, and production year of the tire, the TIN, the incident date, the number of deaths, the number of injuries for incidents occurring in the United States, the State or foreign country where the incident occurred, the make, model, and model year of the vehicle on which the tire was installed, and each component of the tire that allegedly contributed to the incident, coded as follows: 71 tread, 72 sidewall, 73 bead, 98 where a component not covered by categories 71 through 73 is specified in the claim or notice, and 99 where no component of the tire is specified in the claim or notice. If an incident involves more than one such code, each shall be reported separately in the report.

(c) *Numbers of property damage claims and warranty adjustments.* Separate reports on the numbers of those property damage claims and warranty adjustments which involve the components that are specified in codes 71 through 73, and 98, in paragraph (b)(2) of this section. Each such report shall state, separately by each such code, the numbers of such property damage claims and warranty adjustments, respectively, that involve the components indicated by the code. If an underlying property damage claim or warranty adjustment involves more than one such code, each shall be reported separately in the report with no limit on the number of codes to be included. No reporting is necessary if the system or component involved is not specified in such codes, or if the TIN is not specified in any property damage claim.

(d) *Common green tire reporting.* With each quarterly report, each manufacturer of tires shall provide NHTSA with a list of common green tires. For each specific common green tire grouping, the list shall provide all relevant tire lines, tire type codes, SKU numbers, brand names, and brand name owners.

[67 FR 45873, July 10, 2002, as amended at 68 FR 18143, Apr. 15, 2003; 68 FR 35144, June 11, 2003]

§ 579.27 Reporting requirements for manufacturers of fewer than 100 buses annually, for manufacturers of fewer than 500 emergency vehicles annually, for manufacturers of fewer than 5,000 light vehicles, medium-heavy vehicles (other than buses and emergency vehicles), motorcycles or trailers annually, for manufacturers of original equipment, and for manufacturers of replacement equipment other than child restraint systems and tires.

(a) *Applicability.* This section applies to all manufacturers of vehicles with respect to vehicles that are not covered by reports on light vehicles, medium-heavy vehicles and buses, motorcycles, or trailers submitted pursuant to §§ 579.21 through 579.24 of this part, to all manufacturers of original equipment, to all manufacturers of replacement equipment other than manufacturers of tires and child restraint systems, and to registered importers registered under 49 U.S.C. 30141(c).

(b) *Information on incidents involving deaths.* For each reporting period, a manufacturer to which this section applies shall submit a report, pertaining to vehicles and/or equipment manufactured or sold during the calendar year of the reporting period and the nine calendar years prior to the reporting period (four calendar years for equipment), including models no longer in

production, on each incident involving one or more deaths occurring in the United States that is identified in a claim against and received by the manufacturer or in a notice received by the manufacturer which notice alleges or proves that the death was caused by a possible defect in the manufacturer's vehicle or equipment, together with each incident involving one or more deaths occurring in a foreign country that is identified in a claim against and received by the manufacturer involving the manufacturer's vehicle or equipment, if it is identical or substantially similar to a vehicle or item of equipment that the manufacturer has offered for sale in the United States. The report shall be organized such that incidents are reported alphabetically by make, within each make alphabetically by model, and within each model chronologically by model year. If a manufacturer has not received such a claim or notice during a reporting period, the manufacturer need not submit a report to NHTSA for that reporting period.

(c) For each incident described in paragraph (b) of this section, the manufacturer shall separately report the make, model, and model year of the vehicle or equipment, the VIN (for vehicles only), the incident date, the number of deaths, the number of injuries for incidents occurring in the United States, the State or foreign country where the incident occurred, each system or component of the vehicle or equipment that allegedly contributed to the incident, and whether the incident involved a fire or rollover, as follows:

(1) For light vehicles, the system or component involved, and the existence of a fire or rollover, shall be identified and coded as specified in § 579.21(b)(2) of this part.

(2) For medium-heavy vehicles and buses, the system or component involved, and the existence of a fire or rollover, shall be identified and coded as specified in § 579.22(b)(2) of this part.

(3) For motorcycles, the system or component involved, and the existence of a fire, shall be identified and coded as specified in § 579.23(b)(2) of this part.

(4) For trailers, the system or component involved, and the existence of a fire, shall be identified and coded as specified in § 579.24(b)(2) of this part.

(5) For original and replacement equipment, a written identification of each component of the equipment that was allegedly involved, and whether there was a fire, in the manufacturer's own words.

(6) For original and replacement equipment, if the production year of the equipment is unknown, the manufacturer shall specify the number ''9999'' in the field for model or production year.

[67 FR 45873, July 10, 2002, as amended at 68 FR 18143, Apr. 15, 2003; 68 FR 35144, June 11, 2003; 74 FR 47758, Sept. 17, 2009]

§ 579.28 Due date of reports and other miscellaneous provisions.

(a) *Initial submission of reports.* Except as provided in paragraph (n) of this section, the first calendar quarter for which reports are required under §§ 579.21 through 579.27 of this subpart is the third calendar quarter of 2003.

(b) *Due date of reports.* Except as provided in subsection (n) of this section, each manufacturer of motor vehicles and motor vehicle equipment shall submit each report that is required by this subpart not later than 60 days after the last day of the reporting period. Except as provided in § 579.27(b), if a manufacturer has not received any of the categories of information or documents during a quarter for which it is required to report pursuant to §§ 579.21 through 579.26, the manufacturer's report must indicate that no relevant information or documents were received during that quarter. If the due date for any report is a Saturday, Sunday or a Federal holiday, the report shall be due on the next business day.

(c) One-time reporting of historical information. (1) No later than January 15, 2004:

(i) Each manufacturer of vehicles covered by §§ 579.21 through 579.24 of this part shall file separate reports providing information on the numbers of warranty claims recorded in the manufacturer's warranty system, and field reports, that it received in each calendar quarter from July 1, 2000, to June 30, 2003, for vehicles manufactured in

model years 1994 through 2003 (including any vehicle designated as a 2004 model);

(ii) Each manufacturer of child restraint systems covered by § 579.25 of this part shall file separate reports covering the numbers of warranty claims recorded in the manufacturer's warranty system and consumer complaints (added together), and field reports, that it received in each calendar quarter from July 1, 2000, to June 30, 2003, for child restraint systems manufactured from July 1, 1998, to June 30, 2003, and

(iii) Each manufacturer of tires covered by § 579.26 of this part shall file separate reports covering the numbers of warranty adjustments recorded in the manufacturer's warranty adjustment system for tires that it received in each calendar quarter from July 1, 2000, to June 30, 2003, for tires manufactured from July 1, 1998, to June 30, 2003.

(2) Each report filed under paragraph (c)(1) of this section shall include production data, as specified in paragraph (a) of 579.21 through 579.26 of this part and shall identify the alleged system or component covered by warranty claim, warranty adjustment, or field report as specified in paragraph (c) of 579.21 through 579.26 of this part.

(d) *Minimal specificity*. A claim or notice involving death, a claim or notice involving injury, a claim involving property damage, a consumer complaint, a warranty claim or warranty adjustment, or a field report need not be reported if it does not identify the vehicle or equipment with minimal specificity. If a manufacturer initially receives a claim, notice, complaint, warranty claim, warranty adjustment, or field report in which the vehicle or equipment is not identified with minimal specificity and subsequently obtains information that provides the requisite information needed to identify the product with minimal specificity, the claim, etc. shall be deemed to have been received when the additional information is received. If a manufacturer receives a claim or notice involving death or injury in which the vehicle or equipment is not identified with minimal specificity and the matter is being handled by legal counsel retained by the manufacturer, the manufacturer shall attempt to obtain the missing minimal specificity information from such counsel.

(e) *Claims received by registered agents*. A claim received by any registered agent of a manufacturer under the laws of any State, or the agent that any manufacturer offering motor vehicles or motor vehicle equipment for import has designated pursuant to 49 U.S.C. 30164(a), shall be deemed received by the manufacturer.

(f) *Updating of information required in reports*. (1) Except as specified in this subsection, a manufacturer need not update its reports under this subpart.

(2) With respect to each report of an incident submitted under paragraph (b) of §§ 579.21 through 579.26 of this part:

(i) If a vehicle manufacturer is not aware of the VIN, or a tire manufacturer is not aware of the TIN, at the time the incident is initially reported, the manufacturer shall submit an updated report of such incident in its report covering the reporting period in which the VIN or TIN is identified. A manufacturer need not submit an updated report if the VIN or TIN is identified by the manufacturer in a reporting period that is more than one year later than the initial report to NHTSA.

(ii) If a manufacturer indicated code 99 in its report because a system or component had not been identified in the claim or notice that led to the report, and the manufacturer becomes aware during a subsequent calendar quarter that one or more of the specified systems or components allegedly contributed to the incident, the manufacturer shall submit an updated report of such incident in its report covering the reporting period in which the involved specified system(s) or component(s) is (are) identified. A manufacturer need not submit an updated report if the system(s) or component(s) is(are) identified by the manufacturer in a reporting period that is more than one year later than the initial report to NHTSA.

(iii) If one or more systems or components is identified in a manufacturer's report of an incident, the manufacturer need not submit an updated report to

reflect additional systems or components allegedly involved in the incident that it becomes aware of in a subsequent reporting period.

(iv) If the report is of an incident involving an injury and an injured person dies after a manufacturer has reported the injury to NHTSA, the manufacturer need not submit an updated report to NHTSA reflecting that death.

(g) *When a report involving a death is not required.* A report on incident(s) involving one or more deaths occurring in a foreign country that is identified in claim(s) against a manufacturer of motor vehicles or motor vehicle equipment involving a vehicle or equipment that is identical or substantially similar to equipment that the manufacturer has offered for sale in the United States need not be furnished if the claim specifically alleges that the death was caused by a possible defect in a component other than one that is common to the vehicle or equipment that the manufacturer has offered for sale in the United States.

(h) *When a report involving a claim or notice is not required.* If a manufacturer has reported a claim or notice relating to an incident involving death or injury, the manufacturer need not:

(1) Report a claim or notice arising out of the incident by a person who was not injured physically, and

(2) Include in its number of property damage claims a property damage claim arising out of the incident.

(i) *Reporting on behalf of other manufacturers.* Whenever a fabricating manufacturer or importer submits a report on behalf of one or more other manufacturers (including a brand name owner), as authorized under § 579.3(b) of this part, the submitting manufacturer must identify each such other manufacturer. Whenever a brand name owner submits a report on its own behalf, it must identify the fabricating manufacturer of each separate product on which it is reporting.

(j) *Abbreviations.* Whenever a manufacturer is required to identify a State in which an incident occurred, the manufacturer shall use the two-letter abbreviations established by the United States Postal Service (e.g., AZ for Arizona). Whenever a manufacturer is required to identify a foreign country in which an incident occurred, the manufacturer shall use the English-language name of the country in non-abbreviated form.

(k) *Claims of confidentiality.* If a manufacturer claims that any of the information, data, or documents that it submits is entitled to confidential treatment, it must make such claim in accordance with part 512 of this chapter.

(l) *Additional related information that NHTSA may request.* In addition to information required periodically under this subpart, NHTSA may request other information that may help identify a defect related to motor vehicle safety.

(m) *Use of the plural.* As used in this part, the plural includes the singular and the singular includes the plural to bring within the scope of reporting that which might otherwise be construed to be without the scope.

(n) *Submission of copies of field reports.* Copies of field reports required under this subpart shall be submitted not later than 15 days after reports are due pursuant to paragraph (b) of this section.

[67 FR 45873, July 10, 2002, as amended at 68 FR 18143, Apr. 15, 2003; 68 FR 20225, Apr. 24, 2003; 68 FR 35144, 35148, June 11, 2003; 68 FR 64569, Nov. 14, 2003; 69 FR 57869, Sept. 28, 2004; 70 FR 2023, Jan. 12, 2005; 72 FR 29444, May 29, 2007]

§ 579.29 Manner of reporting.

(a) *Submission of reports.* (1) Except as provided in this paragraph, each report required under paragraphs (a) through (c) of §§ 579.21 through 579.26 of this part must be submitted to NHTSA's early warning data repository identified on NHTSA's Internet homepage (*www.nhtsa.dot.gov*). A manufacturer must use templates provided at the early warning website, also identified on NHTSA's homepage, for submitting reports. For data files smaller than the size limit of the Internet e-mail server of the Department of Transportation, a manufacturer may submit a report as an attachment to an e-mail message to *odi.ewr@nhtsa.dot.gov*, using the same templates.

(2) Each report required under § 579.27 of this part may be submitted to NHTSA's early warning data repository as specified in paragraph (a)(1) of

this section or by manually filling out an interactive form on NHTSA's early warning website.

(3) For each report required under paragraphs (a) through (c) of §§ 579.21 through 579.26 of this part and submitted in the manner provided in paragraph (a)(1) of this section, a manufacturer must state the make, model and model year of each motor vehicle or item of motor vehicle equipment in terms that are identical to the statement of the make, model, model year of each motor vehicle or item of motor vehicle equipment provided in the manufacturer's previous report.

(b) *Submission of documents.* A copy of each document required under paragraph (d) of §§ 579.21 through 579.26 of this part may be submitted in digital form using a graphic compression protocol, approved by NHTSA, to the NHTSA data repository, or as an attachment to an e-mail message, as specified in paragraph (a)(1) of this section. Any digital image provided by a manufacturer shall be not less than 200 or more than 300 dpi (dots per inch) resolution. Such documents may also be submitted in paper form. Each document shall be identified in accordance with the templates provided at NHTSA's early warning Web site, which is identified in paragraph (a)(1) of this section.

(c) *Designation of manufacturer contacts.* Not later than 30 days prior to the date of its first quarterly submission, each manufacturer must provide the names, office telephone numbers, postal and street mailing addresses, and electronic mail addresses of two employees (one primary and one backup) whom NHTSA may contact for resolving issues that may arise concerning the submission of information and documents required by this part.

(d) *Manufacturer reporting identification and password.* Not later than 30 days prior to the date of its first quarterly submission, each manufacturer must request a manufacturer identification number and a password.

(e) *Graphic compression protocol.* Not later than 30 days prior to the date of its first quarterly submission, each manufacturer which wishes to submit a copy of a document in digital form, as provided in paragraph (b) of this section, must obtain approval from NHTSA for the use of such protocol.

(f) Information and requests submitted under paragraphs (c), (d), and (e) of this section shall be provided in writing to the Director, Office of Defects Investigation, NHTSA, Attention: Early Warning Division (NVS–217), 1200 New Jersey Avenue, SE., Washington, DC 20590.

[67 FR 45873, July 10, 2002, as amended at 68 FR 35145, June 11, 2003; 72 FR 32017, June 11, 2007; 74 FR 47758, Sept. 17, 2009]

PART 580—ODOMETER DISCLOSURE REQUIREMENTS

Sec.

580.1 Scope.
580.2 Purpose.
580.3 Definitions.
580.4 Security of title documents and power of attorney forms.
580.5 Disclosure of odometer information.
580.6 [Reserved]
580.7 Disclosure of odometer information for leased motor vehicles.
580.8 Odometer disclosure statement retention.
580.9 Odometer record retention for auction companies.
580.10 Application for assistance.
580.11 Petition for approval of alternate disclosure requirements.
580.12 Petition for extension of time.
580.13 Disclosure of odometer information by power of attorney.
580.14 Power of attorney to review title documents and acknowledge disclosure.
580.15 Certification by person exercising powers of attorney.
580.16 Access of transferee to prior title and power of attorney documents.
580.17 Exemptions.

APPENDIX A TO PART 580—SECURE PRINTING PROCESSES AND OTHER SECURE PROCESSES
APPENDIX B TO PART 580—DISCLOSURE FORM FOR TITLE
APPENDIX C TO PART 580—SEPARATE DISCLOSURE FORM
APPENDIX D TO PART 580—DISCLOSURE FORM FOR LEASED VEHICLE
APPENDIX E TO PART 580—POWER OF ATTORNEY DISCLOSURE FORM

AUTHORITY: 49 U.S.C. 32705; delegation of authority at 49 CFR 1.50(f) and 501.8(e)(1).

SOURCE: 53 FR 29476, Aug. 5, 1988, unless otherwise noted.

§ 580.1 Scope.

This part prescribes rules requiring transferors and lessees of motor vehicles to make written disclosure to transferees and lessors respectively, concerning the odometer mileage and its accuracy as directed by sections 408 (a) and (e) of the Motor Vehicle Information and Cost Savings Act as amended, 15 U.S.C. 1988 (a) and (e). In addition, this part prescribes the rules requiring the retention of odometer disclosure statements by motor vehicle dealers, distributors and lessors and the retention of certain other information by auction companies as directed by sections 408(g) and 414 of the Motor Vehicle Information and Cost Savings Act as amended, 15 U.S.C. 1990(d) and 1988(g).

§ 580.2 Purpose.

The purpose of this part is to provide purchasers of motor vehicles with odometer information to assist them in determining a vehicle's condition and value by making the disclosure of a vehicle's mileage a condition of title and by requiring lessees to disclose to their lessors the vehicle's mileage at the time the lessors transfer the vehicle. In addition, the purpose of this part is to preserve records that are needed for the proper investigation of possible violations of the Motor Vehicle Information and Cost Savings Act and any subsequent prosecutorial, adjudicative or other action.

§ 580.3 Definitions.

All terms defined in sections 2 and 402 of the Motor Vehicle Information and Cost Savings Act are used in their statutory meaning. Other terms used in this part are defined as follows:

Lessee means any person, or the agent for any person, to whom a motor vehicle has been leased for a term of at least 4 months.

Lessor means any person, or the agent for any person, who has leased 5 or more motor vehicles in the past 12 months.

Mileage means actual distance that a vehicle has traveled.

Original power of attorney means, for single copy forms, the document set forth by secure process which is issued by the State, and, for multicopy forms, any and all copies set forth by secure process which are issued by the State.

Secure printing process or other secure process means any process which deters and detects counterfeiting and/or unauthorized reproduction and allows alterations to be visible to the naked eye.

Transferee means any person to whom ownership of a motor vehicle is transferred, by purchase, gift, or any means other than by the creation of a security interest, and any person who, as agent, signs an odometer disclosure statement for the transferee.

Transferor means any person who transfers his ownership of a motor vehicle by sale, gift, or any means other than by the creation of a security interest, and any person who, as agent, signs an odometer disclosure statement for the transferor.

[53 FR 29476, Aug. 5, 1988, as amended at 54 FR 35887, Aug. 30, 1989; 56 FR 47686, Sept. 20, 1991]

§ 580.4 Security of title documents and power of attorney forms.

Each title shall be set forth by means of a secure printing process or other secure process. In addition, power of attorney forms issued pursuant to §§ 580.13 and 580.14 and documents which are used to reassign the title shall be issued by the State and shall be set forth by a secure process.

[54 FR 35887, Aug. 30, 1989]

§ 580.5 Disclosure of odometer information.

(a) Each title, at the time it is issued to the transferee, must contain the mileage disclosed by the transferor when ownership of the vehicle was transferred and contain a space for the information required to be disclosed under paragraphs (c), (d), (e) and (f) of this section at the time of future transfer.

(b) Any documents which are used to reassign a title shall contain a space for the information required to be disclosed under paragraphs (c), (d), (e) and (f) of this section at the time of transfer of ownership.

(c) In connection with the transfer of ownership of a motor vehicle, each transferor shall disclose the mileage to the transferee in writing on the title

or, except as noted below, on the document being used to reassign the title. In the case of a transferor in whose name the vehicle is titled, the transferor shall disclose the mileage on the title, and not on a reassignment document. This written disclosure must be signed by the transferor, including the printed name. In connection with the transfer of ownership of a motor vehicle in which more than one person is a transferor, only one transferor need sign the written disclosure. In addition to the signature and printed name of the transferor, the written disclosure must contain the following information:

(1) The odometer reading at the time of transfer (not to include tenths of miles);

(2) The date of transfer;

(3) The transferor's name and current address;

(4) The transferee's name and current address; and

(5) The identity of the vehicle, including its make, model, year, and body type, and its vehicle identification number.

(d) In addition to the information provided under paragraph (c) of this section, the statement shall refer to the Federal law and shall state that failure to complete or providing false information may result in fines and/or imprisonment. Reference may also be made to applicable State law.

(e) In addition to the information provided under paragraphs (c) and (d) of this section,

(1) The transferor shall certify that to the best of his knowledge the odometer reading reflects the actual mileage, or;

(2) If the transferor knows that the odometer reading reflects the amount of mileage in excess of the designed mechanical odometer limit, he shall include a statement to that effect; or

(3) If the transferor knows that the odometer reading differs from the mileage and that the difference is greater than that caused by odometer calibration error, he shall include a statement that the odometer reading does not reflect the actual mileage, and should not be relied upon. This statement shall also include a warning notice to alert the transferee that a discrepancy exists between the odometer reading and the actual mileage.

(f) The transferee shall sign the disclosure statement, print his name, and return a copy to his transferor.

(g) If the vehicle has not been titled or if the title does not contain a space for the information required, the written disclosure shall be executed as a separate document.

(h) No person shall sign an odometer disclosure statement as both the transferor and transferee in the same transaction, unless permitted by §§ 580.13 or 580.14.

[53 FR 29476, Aug. 5, 1988, as amended at 54 FR 35887, Aug. 30, 1989; 56 FR 47686, Sept. 20, 1991]

§ 580.6 [Reserved]

§ 580.7 Disclosure of odometer information for leased motor vehicles.

(a) Before executing any transfer of ownership document, each lessor of a leased motor vehicle shall notify the lessee in writing that the lessee is required to provide a written disclosure to the lessor regarding the mileage. This notice shall contain a reference to the federal law and shall state that failure to complete or providing false information may result in fines and/or imprisonment. Reference may also be made to applicable State law.

(b) In connection with the transfer of ownership of the leased motor vehicle, the lessee shall furnish to the lessor a written statement regarding the mileage of the vehicle. This statement must be signed by the lessee and, in addition to the information required by paragraph (a) of this section, shall contain the following information:

(1) The printed name of the person making the disclosure;

(2) The current odometer reading (not to include tenths of miles);

(3) The date of the statement;

(4) The lessee's name and current address;

(5) The lessor's name and current address;

(6) The identity of the vehicle, including its make, model, year, and body type, and its vehicle identification number;

(7) The date that the lessor notified the lessee of disclosure requirements;

(8) The date that the completed disclosure statement was received by the lessor; and

(9) The signature of the lessor.

(c) In addition to the information provided under paragraphs (a) and (b) of this section,

(1) The lessee shall certify that to the best of his knowledge the odometer reading reflects the actual mileage; or

(2) If the lessee knows that the odometer reading reflects the amount of mileage in excess of the designed mechanical odometer limit, he shall include a statement to that effect; or

(3) If the lessee knows that the odometer reading differs from the mileage and that the difference is greater than that caused by odometer calibration error, he shall include a statement that the odometer reading is not the actual mileage and should not be relied upon.

(d) If the lessor transfers the leased vehicle without obtaining possession of it, the lessor may indicate on the title the mileage disclosed by the lessee under paragraph (b) and (c) of this section, unless the lessor has reason to believe that the disclosure by the lessee does not reflect the actual mileage of the vehicle.

§ 580.8 Odometer disclosure statement retention.

(a) Dealers and distributors of motor vehicles who are required by this part to execute an odometer disclosure statement shall retain for five years a photostat, carbon or other facsimile copy of each odometer mileage statement which they issue and receive. They shall retain all odometer disclosure statements at their primary place of business in an order that is appropriate to business requirements and that permits systematic retrieval.

(b) Lessors shall retain, for five years following the date they transfer ownership of the leased vehicle, each odometer disclosure statement which they receive from a lessee. They shall retain all odometer disclosure statements at their primary place of business in an order that is appropriate to business requirements and that permits systematic retrieval.

(c) Dealers and distributors of motor vehicles who are granted a power of attorney by their transferor pursuant to § 580.13, or by their transferee pursuant to § 580.14, shall retain for five years a photostat, carbon, or other facsimile copy of each power of attorney that they receive. They shall retain all powers of attorney at their primary place of business in an order that is appropriate to business requirements and that permits systematic retrieval.

[53 FR 29476, Aug. 5, 1988, as amended at 54 FR 35888, Aug. 30, 1989]

§ 580.9 Odometer record retention for auction companies.

Each auction company shall establish and retain at its primary place of business in an order that is appropriate to business requirements and that permits systematic retrieval, for five years following the date of sale of each motor vehicle, the following records:

(a) The name of the most recent owner (other than the auction company);

(b) The name of the buyer;

(c) The vehicle identification number; and

(d) The odometer reading on the date which the auction company took possession of the motor vehicle.

§ 580.10 Application for assistance.

(a) A State may apply to NHTSA for assistance in revising its laws to comply with the requirements of 408(d) (1) and (2) of the Motor Vehicle Information and Cost Savings Act, 15 U.S.C. 1988(d) (1) and (2) and §§ 580.4 and 580.5 of this part.

(b) Each application filed under section shall—

(1) Be written in the English language;

(2) Be submitted, to the Office of Chief Counsel, National Highway Traffic Safety Administration, 400 Seventh Street, SW., Washington, DC 20590;

(3) Include a copy of current motor vehicle titling and/or disclosure requirements in effect in the State; and

(4) Include a draft of legislation or regulations intended to amend or revise current State motor vehicle titling and/or disclosure requirements to conform with Federal requirements.

(c) The agency will respond to the applicant, in writing, and provide a list of the Federal statutory and/or regulatory requirements that the State

may have failed to include in its proposal and indicate if any sections of the proposal appear to conflict with Federal requirements.

§ 580.11 Petition for approval of alternate disclosure requirements.

(a) A State may petition NHTSA for approval of disclosure requirements which differ from the disclosure requirements of § 580.5, § 580.7, or § 580.13(f) of this part.

(b) Each petition filed under this section shall—

(1) Be written in the English language;

(2) Be submitted to the Office of Chief Counsel, National Highway Traffic Safety Administration, 400 Seventh Street SW., Washington, DC 20590;

(3) Set forth the motor vehicle disclosure requirements in effect in the State, including a copy of the applicable State law or regulation; and

(4) Explain how the State motor vehicle disclosure requirements are consistent with the purposes of the Motor Vehicle Information and Cost Savings Act.

(c) Notice of the petition and an initial determination pending a 30-day comment period will be published in the FEDERAL REGISTER. Notice of final grant or denial of a petition for approval of alternate motor vehicle disclosure requirements will be published in the FEDERAL REGISTER. The effect of the grant of a petition is to relieve a State from responsibility to conform the State disclosure requirements with § 580.5, § 580.7, or § 580.13(f), as applicable, for as long as the approved alternate disclosure requirements remain in effect in that State. The effect of a denial is to require a State to conform to the requirements of § 580.5, § 580.7 or § 580.13(f), as applicable, of this part until such time as the NHTSA approves any alternate motor vehicle disclosure requirements.

[53 FR 29476, Aug. 5, 1988, as amended at 56 FR 47686, Sept. 20, 1991]

§ 580.12 Petition for extension of time.

(a) If a State cannot conform its laws to achieve compliance with this part by April 29, 1989, the State may petition for an extension of time.

(b) Each petition filed under this section shall—

(1) Be written in the English language;

(2) Be submitted, by February 28, 1989, to the Office of Chief Counsel, National Highway Traffic Safety Administration, 400 Seventh Street SW., Washington, DC, 20590;

(3) Set forth a chronological analysis of the efforts the State has taken to meet the deadline, the reasons why it did not do so, the length of time desired for extension and a description of the steps to be taken while the extension is in effect.

(c) Notice of either the grant or denial of the petition is issued to the petitioner and will be published in the FEDERAL REGISTER.

(d) A petition for a renewal of an extension of time must be filed no later than 30 days prior to the termination of the extension of time granted by the Agency. A petition for a renewal of an extension of time must meet the same requirements as the original petition for an extension of time.

(e) If a petition for a renewal of the extension of time which meets the requirements of § 580.12(b) is filed, the extension of time will continue until a decision is made on the renewal petition.

§ 580.13 Disclosure of odometer information by power of attorney.

(a) If the transferor's title is physically held by a lienholder, or if the transferor to whom the title was issued by the State has lost his title and the transferee obtains a duplicate title on behalf of the transferor, and if otherwise permitted by State law, the transferor may give a power of attorney to his transferee for the purpose of mileage disclosure. The power of attorney shall be on a form issued by the State to the transferee that is set forth by means of a secure printing process or other secure process, and shall contain, in part A, a space for the information required to be disclosed under paragraphs (b), (c), (d), and (e) of this section. If a State permits the use of a power of attorney in the situation described in § 580.14(a), the form must also contain, in part B, a space for the information required to be disclosed

under § 580.14, and, in part C, a space for the certification required to be made under § 580.15.

(b) In connection with the transfer of ownership of a motor vehicle, each transferor to whom a title was issued by the State whose title is physically held by a lienholder or whose title has been lost, and who elects to give his transferee a power of attorney for the purpose of mileage disclosure, must appoint the transferee his attorney-in-fact for the purpose of mileage disclosure and disclose the mileage on the power of attorney form issued by the State. This written disclosure must be signed by the transferor, including the printed name, and contain the following information:

(1) The odometer reading at the time of transfer (not to include tenths of miles);

(2) The date of transfer;

(3) The transferor's name and current address;

(4) The transferee's name and current address; and

(5) The identity of the vehicle, including its make, model year, body type and vehicle identification number.

(c) In addition to the information provided under paragraph (b) of this section, the power of attorney form shall refer to the Federal odometer law and state that providing false information or the failure of the person granted the power of attorney to submit the form to the State may result in fines and/or imprisonment. Reference may also be made to applicable State law.

(d) In addition to the information provided under paragraphs (b) and (c) of this section:

(1) The transferor shall certify that to the best of his knowledge the odometer reading reflects the actual mileage; or

(2) If the transferor knows that the odometer reading reflects mileage in excess of the designed mechanical odometer limit, he shall include a statement to that effect; or

(3) If the transferor knows that the odometer reading differs from the mileage and the difference is greater than that caused by a calibration error, he shall include a statement that the odometer reading does not reflect the actual mileage and should not be relied upon. This statement shall also include a warning notice to alert the transferee that a discrepancy exists between the odometer reading and the actual mileage.

(e) The transferee shall sign the power of attorney form, print his name, and return a copy of the power of attorney form to the transferor.

(f) Upon receipt of the transferor's title, the transferee shall complete the space for mileage disclosure on the title exactly as the mileage was disclosed by the transferor on the power of attorney form. The transferee shall submit the original power of attorney form to the State that issued it, with a copy of the transferor's title or with the actual title when the transferee submits a new title application at the same time. The State shall retain the power of attorney form and title for three years or a period equal to the State titling record retention period, whichever is shorter. If the mileage disclosed on the power of attorney form is lower than the mileage appearing on the title, the power of attorney is void and the dealer shall not complete the mileage disclosure on the title.

[54 FR 35888, Aug. 30, 1989, as amended at 54 FR 40083, Sept. 29, 1989; 56 FR 47686, Sept. 20, 1991]

§ 580.14 Power of attorney to review title documents and acknowledge disclosure.

(a) In circumstances where part A of a secure power of attorney form has been used pursuant to § 580.13 of this part, and if otherwise permitted by State law, a transferee may give a power of attorney to his transferor to review the title and any reassignment documents for mileage discrepancies, and if no discrepancies are found, to acknowledge disclosure on the title. The power of attorney shall be on part B of the form referred to in § 580.13(a), which shall contain a space for the information required to be disclosed under paragraphs (b), (c), (d), and (e) of this section and, in part C, a space for the certification required to be made under § 580.15.

(b) The power of attorney must include a mileage disclosure from the transferor to the transferee and must

be signed by the transferor, including the printed name, and contain the following information:

(1) The odometer reading at the time of transfer (not to include tenths of miles);

(2) The date of transfer;

(3) The transferor's name and current address;

(4) The transferee's name and current address; and

(5) The identity of the vehicle, including its make, model year, body type and vehicle identification number.

(c) In addition to the information provided under paragraph (b) of this section, the power of attorney form shall refer to the Federal odometer law and state that providing false information or the failure of the person granted the power of attorney to submit the form to the State may result in fines and/or imprisonment. Reference may also be made to applicable State law.

(d) In addition to the information provided under paragraphs (b) and (c) of this section:

(1) The transferor shall certify that to the best of his knowledge the odometer reading reflects the actual mileage;

(2) If the transferor knows that the odometer reading reflects mileage in excess of the designed mechanical odometer limit, he shall include a statement to that effect; or

(3) If the transferor knows that the odometer reading differs from the mileage and the difference is greater than that caused by a calibration error, he shall include a statement that the odometer reading does not reflect the actual mileage and should not be relied upon. This statement shall also include a warning notice to alert the transferee that a discrepancy exists between the odometer reading and the actual mileage.

(e) The transferee shall sign the power of attorney form, and print his name.

(f) The transferor shall give a copy of the power of attorney form to his transferee.

[54 FR 35888, Aug. 30, 1989]

§ 580.15 Certification by person exercising powers of attorney.

(a) A person who exercises a power of attorney under both §§ 580.13 and 580.14 must complete a certification that he has disclosed on the title document the mileage as it was provided to him on the power of attorney form, and that upon examination of the title and any reassignment documents, the mileage disclosure he has made on the title pursuant to the power of attorney is greater than that previously stated on the title and reassignment documents. This certification shall be under part C of the same form as the powers of attorney executed under §§ 580.13 and 580.14 and shall include:

(1) The signature and printed name of the person exercising the power of attorney;

(2) The address of the person exercising the power of attorney; and

(3) The date of the certification.

(b) If the mileage reflected by the transferor on the power of attorney is less than that previously stated on the title and any reassignment documents, the power of attorney shall be void.

[54 FR 35889, Aug. 30, 1989]

§ 580.16 Access of transferee to prior title and power of attorney documents.

(a) In circumstances in which a power of attorney has been used pursuant to § 580.13 of this part, if a subsequent transferee elects to return to his transferor to sign the disclosure on the title when the transferor obtains the title and does not give his transferor a power of attorney to review the title and reassignment documents, upon the transferee's request, the transferor shall show to the transferee a copy of the power of attorney that he received from his transferor.

(b) Upon request of a purchaser, a transferor who was granted a power of attorney by his transferor and who holds the title to the vehicle in his own name, must show to the purchaser the copy of the previous owner's title and the power of attorney form.

[54 FR 35889, Aug. 30, 1989]

§ 580.17 Exemptions.

Notwithstanding the requirements of §§ 580.5 and 580.7:

(a) A transferor or a lessee of any of the following motor vehicles need not disclose the vehicle's odometer mileage:

(1) A vehicle having a Gross Vehicle Weight Rating, as defined in § 571.3 of this title, of more than 16,000 pounds;

(2) A vehicle that is not self-propelled;

(3) A vehicle that was manufactured in a model year beginning at least ten years before January 1 of the calendar year in which the transfer occurs; or

Example to paragraph (a)(3): For vehicle transfers occurring during calendar year 1998, model year 1988 or older vehicles are exempt.

(4) A vehicle sold directly by the manufacturer to any agency of the United States in conformity with contractual specifications.

(b) A transferor of a new vehicle prior to its first transfer for purposes other than resale need not disclose the vehicle's odometer mileage.

(c) A lessor of any of the vehicles listed in paragraph (a) of this section need not notify the lessee of any of these vehicles of the disclosure requirements of § 580.7.

[53 FR 29476, Aug. 5, 1988, as amended at 54 FR 35888, Aug. 30, 1989. Redesignated at 62 FR 47765, Sept. 11, 1997; 63 FR 52632, Oct. 1, 1998]

APPENDIX A TO PART 580—SECURE PRINTING PROCESSES AND OTHER SECURE PROCESSES

1. Methods to deter or detect counterfeiting and/or unauthorized reproduction.

(a) Intaglio printing—a printing process utilized in the production of bank-notes and other security documents whereby an engraved plate meets the paper under extremely high pressure forcing the paper into the incisions below the surface of the plate.

(b) Intaglio Printing With Latent Images—a printing process utilized in the production of bank-notes and other security documents whereby an engraved plate meets the paper under extremely high pressure forcing the paper into the incisions below the surface of the plate. The three dimensional nature of intaglio printing creates latent images that aid in verification of authenticity and deter counterfeiting.

(c) High Resolution Printing—a printing process which achieves excellent art clarity and detail quality approaching that of the intaglio process.

(d) Micro-line Printing—a reduced line of type that appears to be a solid line to the naked eye but contains readable intelligence under strong magnification.

(e) Pantograph Void Feature—wording incorporated into a pantograph by varying screen density in the pantograph. The wording will appear when attempts are made to photocopy on color copiers.

(f) Hologram—a defraction foil substrate, produced from a negative which was made by splitting a laser beam into two separate beams to produce a three dimensional effect.

(g) Security Paper—paper containing a security watermark and/or a security thread.

2. Methods to allow alterations to be visible to the naked eye.

(a) Erasure Sensitive Background Inks—a process whereby the text is printed in a dark color ink over a fine line erasure-sensitive prismatic ink tint.

(b) Security Lamination—retro-reflective security laminate is placed over vital information after it has been entered to allow for detection of attempts to alter this information.

(c) Security Paper—paper which has been chemically treated to detect chemical alterations.

APPENDIX B TO PART 580—DISCLOSURE FORM FOR TITLE

ODOMETER DISCLOSURE STATEMENT

Federal law (and State law, if applicable) requires that you state the mileage in connection with the transfer of ownership. Failure to complete or providing a false statement may result in fines and/or imprisonment.

I state that the odometer now reads _____ (no tenths) miles and to the best of my knowledge that it reflects the actual mileage of the vehicle described herein, unless one of the following statements is checked.

—(1) I hereby certify that to the best of my knowledge the odometer reading reflects the amount of mileage in excess of its mechanical limits.

—(2) I hereby certify that the odometer reading is NOT the actual mileage. WARNING—ODOMETER DISCREPANCY.

_____

(Transferor's Signature)

_____

(Transferee's Signature)

_____

(Printed name)

_____

(Printed name)

Date of Statement _____
Transferee's Name _____
Transferee's Address _____
(Street)
_____
(City) (State) (ZIP Code)

APPENDIX C TO PART 580—SEPARATE DISCLOSURE FORM

ODOMETER DISCLOSURE STATEMENT

Federal law (and State law, if applicable) requires that you state the mileage upon transfer of ownership. Failure to complete or providing a false statement may result in fines and/or imprisonment.

I, _____ (transferor's name, Print) state that the odometer now reads _____ (no tenths) miles and to the best of my knowledge that it reflects the actual mileage of the vehicle described below, unless one of the following statements is checked.

—(1) I hereby certify that to the best of my knowledge the odometer reading reflects the amount of mileage in excess of its mechanical limits.

—(2) I hereby certify that the odometer reading is NOT the actual mileage. WARNING—ODOMETER DISCREPANCY.

Make _____
Model _____
Body Type _____
Vehicle Identification Number _____
Year _____
_____
(Transferor's Signature)
_____
(Printed name)
Transferor's Address _____
(Street)
_____
(City) (State) (ZIP Code)
Date of Statement _____
_____
(Transferee's Signature)
_____
(Printed name)
Transferee's Name _____
Transferee's Address _____
(Street)
_____
(City) (State) (ZIP Code)

APPENDIX D TO PART 580—DISCLOSURE FORM FOR LEASED VEHICLE

ODOMETER DISCLOSURE STATEMENT (LEASED VEHICLE)

Federal law (and State law, if applicable) requires that the lessee disclose the mileage to the lessor in connection with the transfer of ownership. Failure to complete or making a false statement may result in fines and/or imprisonment. Complete disclosure form below and return to lessor.

I,_____ (name of person making disclosure, Print) state that the odometer now reads _____ (no tenths) miles and to the best of my knowledge that it reflects the actual mileage of the vehicle described below, unless one of the following statements is checked.

—(1) I hereby certify that to the best of my knowledge the odometer reading reflects the amount of mileage in excess of its mechanical limits.

—(2) I hereby certify that the odometer reading is NOT the actual mileage.

Make _____
Model _____
Body Type _____
Vehicle Identification Number _____
Year _____
Lessee's Name _____
Lessee's Address _____
(Street)
_____
(City) (State) (ZIP Code)
Lessee's Signature _____
Date of Statement _____
Lessor's Name _____
Lessor's Address _____
(Street)
_____
(City) (State) (ZIP Code)
Date Disclosure Form Sent to Lessee _____
Date Completed Disclosure Form Received from Lessee _____
Lessor's Signature _____

APPENDIX E TO PART 580—POWER OF ATTORNEY DISCLOSURE FORM

WARNING: This form may be used only when title is physically held by lienholder or has been lost. This form must be submitted to the state by the person exercising powers of attorney. Failure to do so may result in fines and/or imprisonment.

VEHICLE DESCRIPTION

Year _____ Make _____
Model _____ Body Type _____
Vehicle Identification Number _____

PART A. POWER OF ATTORNEY TO DISCLOSE MILEAGE

Federal law (and State Law, if applicable) requires that you state the mileage upon transfer of ownership. Providing a false statement may result in fines and/or imprisonment.

I, _____ (transferor's name, Print) appoint _____ (transferee's name, Print) as my attorney-in-fact, to disclose the mileage, on the title for the vehicle

described above, exactly as stated in my following disclosure.

I state that the odometer now reads _____ (no tenths) miles and to the best of my knowledge that it reflects the actual mileage unless one of the following statements is checked.

____ (1) I hereby certify that to the best of my knowledge the odometer reading reflect the mileage in excess of its mechanical limits.

____ (2) I hereby certify that the odometer reading is NOT the actual mileage. WARNING—ODOMETER DISCREPANCY.

_____
(Transferor's Signature)

_____
(Printed Name)

Transferor's Address (Street)
_____

(City) _____ (State) ____ (ZIP Code) _____.

Date of Statement _____

_____
(Transferee's Signature)

_____
(Printed Name)

Transferee's Name _____

Transferee's Address (Street)
_____

(City) _____ (State) ____ (ZIP Code) _____.

PART B. POWER OF ATTORNEY TO REVIEW TITLE DOCUMENTS AND ACKNOWLEDGE DISCLOSURE.

(Part B is invalid unless Part A has been completed.)

I, _____ (transferee's name, Print) appoint _____ (transferor's name, Print) as my attorney-in-fact, to sign the mileage disclosure, on the title for the vehicle described above, only if the disclosure is exactly as the disclosure completed below.

_____
(Transferee's Signature)

_____
(Printed Name)

Transferee's Name _____

Transferee's Address (Street)
_____

(City) _____ (State) ____ (ZIP Code) _____.

Federal law (and State Law, if applicable) requires that you state the mileage upon transfer of ownership. Providing a false statement may result in fines and/or imprisonment.

I, _____ (transferor's name, Print) state that the odometer now reads _____ (no tenths) miles and to the best of my knowledge that it reflects the actual mileage unless one of the following statements is checked.

____ (1) I hereby certify that to the best of my knowledge the odometer reading reflect the mileage in excess of its mechanical limits.

____ (2) I hereby certify that the odometer reading is NOT the actual mileage. WARNING—ODOMETER DISCREPANCY.

_____
(Transferor's Signature)

_____
(Printed Name)

Transferor's Address (Street)
_____

(City) _____ (State) ____ (ZIP Code) _____.

Date of Statement _____

PART C. CERTIFICATION

(To Be Completed When parts A and B Have Been Used)

I, _____, (person exercising above powers of attorney, Print), hereby certify that the mileage I have disclosed on the title document is consistent with that provided to me in the above power of attorney. Further, upon examination of the title and any reassignment documents for the vehicle described above, the mileage diclosure I have made on the title pursuant to the power of attorney is greater than that previously stated on the title and reassignment documents. This certification is not intended to create, nor does it create any new or additional liability under Federal or State law.

_____
(Signature)

_____
(Printed Name)

_____
Address (Street)

(City) _____ (State) ____ (ZIP Code) _____

Date _____

[54 FR 9816, Mar. 8, 1989, as amended at 54 FR 35889, Aug. 30, 1989]

PART 581—BUMPER STANDARD

Sec.
581.1 Scope.
581.2 Purpose.
581.3 Application.
581.4 Definitions.
581.5 Requirements.
581.6 Conditions.
581.7 Test procedures.
581.8 Exemptions.

AUTHORITY: 49 U.S.C. 32502; 322, 30111, 30115, 30117 and 30166; delegation of authority at 49 CFR 1.50.

SOURCE: 42 FR 24059, May 12, 1977, unless otherwise noted.

§ 581.1 Scope.

This standard establishes requirements for the impact resistance of vehicles in low speed front and rear collisions.

§ 581.2 Purpose.

The purpose of this standard is to reduce physical damage to the front and rear ends of a passenger motor vehicle from low speed collisions.

§ 581.3 Application.

This standard applies to passenger motor vehicles other than multipurpose passenger vehicles and low-speed vehicles as defined in 49 CFR part 571.3(b).

[63 FR 33217, June 17, 1998]

§ 581.4 Definitions.

All terms defined in 49 U.S.C. 32101 are used as defined therein.

Bumper face bar means any component of the bumper system that contacts the impact ridge of the pendulum test device.

[42 FR 24059, May 12, 1977, as amended at 64 FR 2862, Jan. 19, 1999]

§ 581.5 Requirements.

(a) Each vehicle shall meet the damage criteria of §§ 581.5(c)(1) through 581.5(c)(9) when impacted by a pendulum-type test device in accordance with the procedures of § 581.7(b), under the conditions of § 581.6, at an impact speed of 1.5 m.p.h., and when impacted by a pendulum-type test device in accordance with the procedures of § 581.7(a) at 2.5 m.p.h., followed by an impact into a fixed collision barrier that is perpendicular to the line of travel of the vehicle, while traveling longitudinally forward, then longitudinally rearward, under the conditions of § 581.6, at 2.5 m.p.h.

(b) [Reserved]

(c) *Protective criteria.* (1) Each lamp or reflective device except license plate lamps shall be free of cracks and shall comply with applicable visibility requirements of S5.3.1.1 of Standard No. 108 (§ 571.108 of this chapter). The aim of each headlamp installed on the vehicle shall be adjustable to within the beam aim inspection limits specified in Table 1 of SAE Recommended Practice J599 AUG97, measured with the aiming method appropriate for that headlamp.

(2) The vehicle's hood, trunk, and doors shall operate in the normal manner.

(3) The vehicle's fuel and cooling systems shall have no leaks or constricted fluid passages and all sealing devices and caps shall operate in the normal manner.

(4) The vehicle's exhaust system shall have no leaks or constrictions.

(5) The vehicle's propulsion, suspension, steering, and braking systems shall remain in adjustment and shall operate in the normal manner.

(6) A pressure vessel used to absorb impact energy in an exterior protection system by the accumulation of gas pressure or hydraulic pressure shall not suffer loss of gas or fluid accompanied by separation of fragments from the vessel.

(7) The vehicle shall not touch the test device, except on the impact ridge shown in Figures 1 and 2, with a force that exceeds 2000 pounds on the combined surfaces of Planes A and B of the test device.

(8) The exterior surfaces shall have no separations of surface materials, paint, polymeric coatings, or other covering materials from the surface to which they are bonded, and no permanent deviations from their original contours 30 minutes after completion of each pendulum and barrier impact, except where such damage occurs to the bumper face bar and the components and associated fasteners that directly attach the bumper face bar to the chassis frame.

(9) Except as provided in § 581.5(c)(8), there shall be no breakage or release of fasteners or joints.

[42 FR 24059, May 12, 1977, as amended at 42 FR 38909, Aug. 1, 1977; 43 FR 40231, Sept. 11, 1978; 47 FR 21837, May 20, 1982; 64 FR 16360, Apr. 5, 1999; 64 FR 49092, Sept. 10, 1999]

§ 581.6 Conditions.

The vehicle shall meet the requirements of § 581.5 under the following conditions.

(a) *General.* (1) The vehicle is at unloaded vehicle weight.

(2) The front wheels are in the straight ahead position.

(3) Tires are inflated to the vehicle manufacturer's recommended pressure for the specified loading condition.

(4) Brakes are disengaged and the transmission is in neutral.

(5) Trailer hitches, license plate brackets, and headlamp washers are removed from the vehicle. Running lights, fog lamps, and equipment mounted on the bumper face bar are removed from the vehicle if they are optional equipment.

(b) *Pendulum test conditions.* The following conditions apply to the pendulum test procedures of §581.7 (a) and (b).

(1) The test device consists of a block with one side contoured as specified in Figure 1 and Figure 2 with the impact ridge made of A1S1 4130 steel hardened to 34 Rockwell ''C.'' The impact ridge and the surfaces in Planes A and B of the test device are finished with a surface roughness of 32 as specified by SAE Recommended Practice J449A, June 1963. From the point of release of the device until the onset of rebound, the pendulum suspension system holds Plane A vertical, with the arc described by any point on the impact line lying in a vertical plane (for §581.7(a), longitudinal; for §581.7(b), at an angle of 30° to a vertical longitudinal plane) and having a constant radius of not less than 11 feet.

(2) With Plane A vertical, the impact line shown in Figures 1 and 2 is horizontal at the same height as the test device's center of percussion.

(3) The effective impacting mass of the test device is equal to the mass of the tested vehicle.

(4) When impacted by the test device, the vehicle is at rest on a level rigid concrete surface.

(c) *Barrier test condition.* At the onset of a barrier impact, the vehicle's engine is operating at idling speed in accordance with the manufacturer's specifications. Vehicle systems that are not necessary to the movement of the vehicle are not operating during impact.

(Authority: Sec. 102, Pub. L. 92–513, 86 Stat. 947 (15 U.S.C. 1912); secs. 103, 119, Pub. L. 89–563, 80 Stat. 718 (15 U.S.C. 1392, 1407); delegation of authority at 49 CFR 1.50 and 501.7)

[42 FR 24059, May 12, 1977, as amended at 42 FR 38909, Aug. 1, 1977; 48 FR 43331, Sept. 23, 1983]

§581.7 Test procedures.

(a) *Longitudinal impact test procedures.* (1) Impact the vehicle's front surface and its rear surface two times each with the impact line at any height from 16 to 20 inches, inclusive, in accordance with the following procedure.

(2) For impacts at a height of 20 inches, place the test device shown in Figure 1 so that Plane A is vertical and the impact line is horizontal at the specified height.

(3) For impacts at a height between 20 inches and 16 inches, place the test device shown in Figure 2 so that Plane A is vertical and the impact line is horizontal at a height within the range.

(4) For each impact, position the test device so that the impact line is at least 2 inches apart in vertical direction from its position in any prior impact, unless the midpoint of the impact line with respect to the vehicle is to be more than 12 inches apart laterally from its position in any prior impact.

(5) For each impact, align the vehicle so that it touches, but does not move, the test device, with the vehicle's longitudinal centerline perpendicular to the plane that includes Plane A of the test device and with the test device inboard of the vehicle corner test positions specified in §581.7(b).

(6) Move the test device away from the vehicle, then release it to impact the vehicle.

(7) Perform the impacts at intervals of not less than 30 minutes.

(b) *Corner impact test procedure.* (1) Impact a front corner and a rear corner of the vehicle once each with the impact line at a height of 20 inches and impact the other front corner and the other rear corner once each with the impact line at any height from 16 to 20 inches, inclusive, in accordance with the following procedure.

(2) For an impact at a height of 20 inches, place the test device shown in

Figure 1 so that Plane A is vertical and the impact line is horizontal at the specified height.

(3) For an impact at a height between 16 inches and 20 inches, place the test device shown in Figure 2 so that Plane A is vertical and the impact line is horizontal at a height within the range.

(4) Align the vehicle so that a vehicle corner touches, but does not move, the lateral center of the test device with Plane A of the test device forming an angle of 60 degrees with a vertical longitudinal plane.

(5) Move the test device away from the vehicle, then release it to impact the vehicle.

(6) Perform the impact at intervals of not less than 30 minutes.

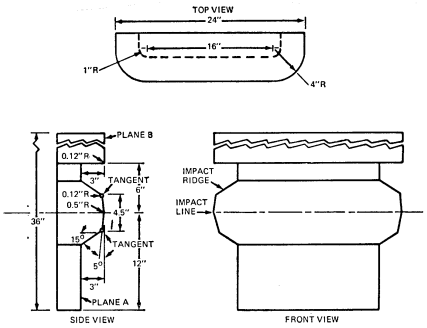

FIGURE 1

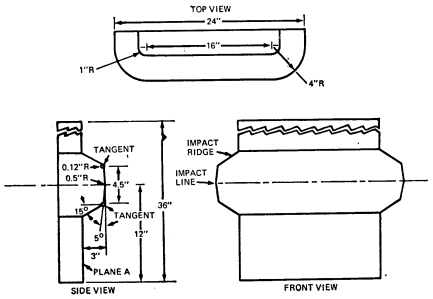

FIGURE 2

[42 FR 24059, May 12, 1977, as amended at 42 FR 38909, Aug. 1, 1977]

§ 581.8 Exemptions.

A manufacturer of a passenger motor vehicle to which a bumper standard issued under this part applies may apply to the Administrator:

(a) For rulemaking as provided in part 552 of this chapter to exempt a class of passenger motor vehicles from all or any part of a bumper standard issued under this part on the basis that the class of vehicles has been manufactured for a special use and that compliance with the standard would unreasonably interfere with the special use of the class of vehicle; or

(b) To exempt a make or model of passenger motor vehicle on the basis set forth in paragraph (a) of this section or part 555 of this chapter.

(c) An application filed for exemption on the basis of paragraph (a) of this section shall contain the information specified in § 555.5 of this chapter, and set forth data, views, and arguments in support that the vehicle has been manufactured for a special use and that compliance with the bumper standard would interfere unreasonably with the special use of the vehicle.

(d) An application filed for exemption under part 555 of this chapter shall be filed in accordance with the requirements of that part.

(e) The NHTSA shall process exemption applications in accordance with § 555.7 of this chapter. An exemption granted a manufacturer on the basis of paragraph (a) of this section is indefinite in length but expires when the manufacturer ceases production of the exempted vehicle, or when the exempted vehicle as produced has been so modified from its original design that the Administrator decides that it is no longer manufactured for the special use upon which the application for its exemption was based. The Administrator may terminate an exemption in the

manner set forth in §§ 555.8(c) and 555.8(f) of this chapter, and for the reasons set forth in § 555.8(d) of this chapter. An exempted vehicle shall be labeled in accordance with § 555.9 of this chapter. Information relating to an application shall be available to the public in the manner specified in § 555.10 of this chapter.

[64 FR 2862, Jan. 19, 1999]

PART 582—INSURANCE COST INFORMATION REGULATION

Sec.
582.1 Scope.
582.2 Purpose.
582.3 Definitions.
582.4 Requirements.
582.5 Information form.

AUTHORITY: 49 U.S.C. 32303; delegation of authority at 49 CFR 1.50(f).

SOURCE: 40 FR 4918, Feb. 3, 1975, unless otherwise noted.

§ 582.1 Scope.

This part requires automobile dealers to make available to prospective purchasers information reflecting differences in insurance costs for different makes and models of passenger motor vehicles based upon differences in damage susceptibility and crashworthiness, pursuant to section 201(e) of the Motor Vehicle Information and Cost Savings Act (15 U.S.C. 1941(e)), herein ''the Cost Savings Act.''

§ 582.2 Purpose.

The purpose of this part is to enable prospective purchasers to compare differences in auto insurance costs for the various makes and models of passenger motor vehicles, based upon differences in damage susceptibility and crashworthiness, and to realize any savings in collision insurance resulting from differences in damageability, and any savings in medical payment insurance resulting from differences in crashworthiness.

§ 582.3 Definitions.

(a) *Statutory definitions.* All terms used in this part which are defined in section 2 of the Cost Savings Act are used as so defined.

(b) *Definitions used in this part.* (1) *Automobile dealer* means any person who engages in the retail sale of new automobiles as a trade or business.

(2) *Collision insurance* means insurance that reimburses the insured party for physical damage to his property resulting from automobile accidents.

(3) *Insurance cost* means the insurance premium rate, as expressed in appropriate indices, for collision and medical payment, including personal injury protection in no-fault states.

(4) *Medical payment insurance* means insurance that reimburses the insured party for medical expenses sustained by himself, his family, and his passengers in automobile accidents.

[40 FR 4918, Feb. 3, 1975, as amended at 58 FR 12550, Mar. 5, 1993]

§ 582.4 Requirements.

(a) Each automobile dealer shall make available to prospective purchasers, without charge, the information specified in § 582.5, at each location where he or she offers new vehicles for sale.

(b) Each automobile dealer shall maintain a sufficient quantity of booklets containing the information specified in § 582.5 to assure that they are available for retention by prospective purchasers.

(c) The booklets shall be revised to reflect the updated data published by NHTSA each year within 30 days of NHTSA's publication of the data in the FEDERAL REGISTER.

[58 FR 12550, Mar. 5, 1993]

§ 582.5 Information form.

The information made available pursuant to § 582.4 shall be presented in writing in the English language and in not less than 10-point type. It shall be presented in the format set forth below, and shall include the complete explanatory text and the updated data published annually by NHTSA.

MARCH [YEAR TO BE INSERTED]

COMPARISON OF DIFFERENCES IN INSURANCE COSTS FOR PASSENGER CARS, STATION WAGONS/PASSENGER VANS, PICKUPS AND UTILITY VEHICLES ON THE BASIS OF DAMAGE SUSCEPTIBILITY

The National Highway Traffic Safety Administration (NHTSA) has provided the information in this booklet in compliance with Federal law as an aid to consumers considering the purchase of a new vehicle. The booklet compares differences in insurance costs for different makes and models of passenger cars, station wagons/passenger vans, pickups, and utility vehicles on the basis of damage susceptibility. However, it does not indicate a vehicle's relative safety.

The following table contains the best available information regarding the effect of damage susceptibility on insurance premiums. It was taken from data compiled by the Highway Loss Data Institute (HLDI) in its December [YEAR TO BE INSERTED] *Insurance Collision Report*, and reflects the collision loss experience of passenger cars, utility vehicles, light trucks, and vans sold in the United States in terms of the average loss payment per insured vehicle year for [THREE APPROPRIATE YEARS TO BE INSERTED]. NHTSA has not verified the data in this table.

The table represents vehicles' collision loss experience in relative terms, with 100 representing the average for all passenger vehicles. Thus, a rating of 122 reflects a collision loss experience that is 22 percent higher (worse) than average, while a rating of 96 reflects a collision loss experience that is 4 percent lower (better) than average. The table is not relevant for models that have been substantially redesigned for [YEAR TO BE INSERTED], and it does not include information about models without enough claim experience.

Although many insurance companies use the HLDI information to adjust the ''base rate'' for the collision portion of their insurance premiums, the amount of any such adjustment is usually small. It is unlikely that your total premium will vary more than ten percent depending upon the collision loss experience of a particular vehicle.

If you do not purchase collision coverage or your insurance company does not use the HLDI information, your premium will not vary at all in relation to these rankings.

In addition, different insurance companies often charge different premiums for the same driver and vehicle. Therefore, you should contact insurance companies or their agents directly to determine the actual premium that you will be charged for insuring a particular vehicle.

PLEASE NOTE: In setting insurance premiums, insurance companies mainly rely on factors that are not directly related to the vehicle itself (except for its value). Rather, they mainly consider driver characteristics (such as age, gender, marital status, and driving record), the geographic area in which the vehicle is driven, how many miles are traveled, and how the vehicle is used. Therefore, to obtain complete information about insurance premiums, you should contact insurance companies or their agents directly.

Insurance companies do not generally adjust their premiums on the basis of data reflecting the crashworthiness of different vehicles. However, some companies adjust their premiums for personal injury protection and medical payments coverage if the insured vehicle has features that are likely to improve its crashworthiness, such as air bags and automatic seat belts.

Test data relating to vehicle crashworthiness and rollover ratings are available from NHTSA's New Car Assessment Program (NCAP). NCAP test results demonstrate relative frontal and side crash protection in new vehicles, and relative rollover resistance. Information on vehicles that NHTSA has tested in the NCAP program can be obtained from *http://www.safercar.gov* or by calling NHTSA's toll-free Vehicle Safety Hotline at 1–888–327–4236 (TTY: 1–800–424–9153).

[Insert Table To Be Published Each March by the National Highway Traffic Safety Administration]

If you would like more details about the information in this table, or wish to obtain the complete Insurance Collision Report, please contact HLDI directly, at: Highway Loss Data Institute, 1005 North Glebe Road, Arlington, VA 22201, Tel: (703) 247–1600.

[60 FR 15512, Mar. 24, 1995, as amended at 70 FR 35557, June 21, 2005]

PART 583—AUTOMOBILE PARTS CONTENT LABELING

Sec.

583.1 Scope.
583.2 Purpose.
583.3 Applicability.
583.4 Definitions.
583.5 Label requirements.
583.6 Procedure for determining U.S./Canadian parts content.
583.7 Procedure for determining major foreign sources of passenger motor vehicle equipment.
583.8 Procedure for determining country of origin for engines and transmissions (for purposes of determining the information specified by §§583.5(a)(4) and 583.5(a)(5) only).

583.9 Attachment and maintenance of label.
583.10 Outside suppliers of passenger motor vehicle equipment.
583.11 Allied suppliers of passenger motor vehicle equipment.
583.12 Suppliers of engines and transmissions.
583.13 Supplier certification and certificates.
583.14 Currency conversion rate.
583.15 Joint ownership.
583.16 Maintenance of records.
583.17 Reporting.

AUTHORITY: 49 U.S.C. 32304, 49 CFR 1.50, 501.2(f).

SOURCE: 59 FR 37330, July 21, 1994, unless otherwise noted.

§ 583.1 Scope.

This part establishes requirements for the disclosure of information relating to the countries of origin of the equipment of new passenger motor vehicles.

§ 583.2 Purpose.

The purpose of this part is to aid potential purchasers in the selection of new passenger motor vehicles by providing them with information about the value of the U.S./Canadian and foreign parts content of each vehicle, the countries of origin of the engine and transmission, and the site of the vehicle's final assembly.

§ 583.3 Applicability.

This part applies to manufacturers of new passenger motor vehicles manufactured or imported for sale in the United States, suppliers of passenger motor vehicle equipment, and dealers of new passenger motor vehicles.

§ 583.4 Definitions.

(a) *Statutory terms*. The terms *allied supplier*, *carline*, *country of origin*, *dealer*, *foreign content*, *manufacturer*, *new passenger motor vehicle*, *of U.S./Canadian origin*, *outside supplier*, *passenger motor vehicle*, *passenger motor vehicle equipment*, *percentage (by value)*, *State*, and *value added in the United States and Canada*, defined in 49 U.S.C. 32304(a), are used in accordance with their statutory meanings except as further defined in paragraph (b) of this section.

(b) *Other terms and further definitions*.

(1) *Administrator* means the Administrator of the National Highway Traffic Safety Administration.

(2) *Allied supplier* means a supplier of passenger motor vehicle equipment that is wholly owned by the manufacturer, or in the case of a joint venture vehicle assembly arrangement, any supplier that is wholly owned by one member of the joint venture arrangement. A supplier is considered to be wholly owned by the manufacturer if a common parent company owns both the manufacturer and the supplier, or if a group of related companies own both the manufacturer and the supplier and no outside interests (interests other than the manufacturer itself or companies which own the manufacturer) own the supplier.

(3) *Carline* means a name denoting a group of vehicles which has a degree of commonality in construction (*e.g.*, body, chassis). Carline does not consider any level of decor or opulence and is not generally distinguished by such characteristics as roof line, number of doors, seats, or windows, except for light duty trucks. Carline is not distinguished by country of manufacture, final assembly point, engine type, or driveline. Light duty trucks are considered to be different carlines than passenger cars. A carline includes all motor vehicles of a given nameplate. Special purpose vehicles, vans, and pickup trucks are classified as separate carlines.

(4) *Final assembly* means all operations involved in the assembly of a vehicle, performed at the final assembly point including but not limited to assembly of body panels, painting, final chassis assembly, trim installation, except engine and transmission fabrication and assembly and the fabrication of motor vehicle equipment components produced at the same final assembly point using forming processes such as stamping, machining or molding processes.

(5) *Final assembly point* means the plant, factory, or other place, which is a building or series of buildings in close proximity, where a new passenger motor vehicle is produced or assembled from passenger motor vehicle equipment and from which such vehicle is delivered to a dealer or importer in

such a condition that all component parts necessary to the mechanical operation of such automobile are included with such vehicle whether or not such component parts are permanently installed in or on such vehicle. For multi-stage vehicles, the final assembly point is the location where the first stage vehicle is assembled.

(6) *Outside supplier* means:

(i) A non-allied supplier of passenger motor vehicle equipment to a manufacturer's allied supplier and

(ii) Anyone other than an allied supplier who ships directly to the manufacturer's final assembly point.

(7) *Passenger motor vehicle equipment* means any system, subassembly, or component received at the final assembly point for installation on, or attachment to, such vehicle at the time of its initial shipment by the manufacturer to a dealer for sale to an ultimate purchaser. Passenger motor vehicle equipment also includes any system, subassembly, or component received by an allied supplier from an outside supplier for incorporation into equipment supplied by the allied supplier to the manufacturer with which it is allied.

(8) *Person* means an individual, partnership, corporation, business trust, or any organized group of persons.

(9) *Ultimate purchaser* means with respect to any new passenger motor vehicle, the first person, other than a dealer purchasing in its capacity as a dealer, who in good faith purchases such new passenger motor vehicle for purposes other than resale.

[59 FR 37330, July 21, 1994, as amended at 64 FR 40780, July 28, 1999]

§ 583.5 Label requirements.

(a) Except as provided in paragraphs (f) and (g) of this section, each manufacturer of new passenger motor vehicles shall cause to be affixed to each passenger motor vehicle manufactured on or after October 1, 1994, a label that provides the following information:

(1) *U.S./Canadian parts content.* The overall percentage, by value, of the passenger motor vehicle equipment that was installed on vehicles within the carline of which the vehicle is part, and that originated in the United States and/or Canada (the procedure for determining U.S./Canadian Parts Content is set forth in § 583.6);

(2) *Major sources of foreign parts content.* The names of any countries other than the United States and Canada which contributed at least 15 percent of the average overall percentage, by value, of the passenger motor vehicle equipment installed on vehicles within the carline of which the vehicle is part, and the percentages attributable to each such country (if there are more than two such countries, the manufacturer need only provide the information for the two countries with the highest percentages; the procedure for determining major foreign sources of passenger motor vehicle equipment is set forth in § 583.7);

(3) *Final assembly point.* The city, state (in the case of vehicles assembled in the United States), and country of the final assembly point of the passenger motor vehicle;

(4) *Country of origin for the engine.* The country of origin of the passenger motor vehicle's engine (the procedure for making this country of origin determination is set forth in § 583.8);

(5) *Country of origin for the transmission.* The country of origin of the passenger motor vehicle's transmission (the procedure for making this country of origin determination is set forth in § 583.8);

(6) *Explanatory note.* A statement which explains that parts content does not include final assembly, distribution, or other non-parts costs.

(b) Except as provided in paragraphs (e), (f) and (g) of this section, the label required under paragraph (a) of this section shall read as follows, with the specified information inserted in the places indicated (except that if there are no major sources of foreign parts content, omit the section ''Major Sources of Foreign Parts Content''):

PARTS CONTENT INFORMATION

For vehicles in this carline:

U.S./Canadian Parts Content: (insert number) %

Major Sources of Foreign Parts Content:

(Name of country with highest percentage): (insert number) %

(Name of country with second highest percentage): (insert number) %

NOTE: Parts content does not include final assembly, distribution, or other non-parts costs.

For this vehicle:

Final Assembly Point: (city, state, country)
Country of Origin:
Engine: (name of country)
Transmission: (name of country)

(c) The percentages required to be provided under paragraph (a) of this section may be rounded by the manufacturer to the nearest 5 percent.

(d) The label required by paragraph (a) of this section shall:

(1) Be placed in a prominent location on each vehicle where it can be read from the exterior of the vehicle with the doors closed, and may be either part of the Monroney price information label required by 15 U.S.C. 1232, part of the fuel economy label required by 15 U.S.C. 2006, or a separate label. A separate label may include other consumer information.

(2)(i) Be printed in letters that have a color that contrasts with the background of the label; and

(ii) Have the information required by paragraphs (a)(1) through (5) of this section vertically centered on the label in boldface capital letters and numerals of 12 point size or larger; and

(iii) Have the information required by paragraph (a)(6) of this section in type that is two points smaller than the information required by paragraphs (a)(1) through (5) of this section.

(3) In the case of a label that is included as part of the Monroney price information label or fuel economy label, or a separate label that includes other consumer information, be separated from all other information on those labels by a solid line that is a minimum of three points in width.

(4) The information required by paragraphs (a)(1) through (6) of this section shall be immediately preceded by the words, ''PARTS CONTENT INFORMATION,'' in boldface, capital letters that are 12 point size or larger.

(e) *Carlines assembled in the U.S./Canada and in one or more other countries.* (1) If a carline is assembled in the U.S. and/or Canada, and in one or more other countries, the manufacturer may, at its option, add the following additional information at the end of the explanatory note specified in (a)(6), with the specified information inserted in the places indicated:

This carline is assembled in the U.S. and/or Canada, and in [insert name of each other country]. The U.S./Canadian parts content for the portion of the carline assembled in [insert name of country, treating the U.S. and Canada together, i.e., U.S./Canada] is [____]%.

(2) A manufacturer selecting this option shall divide the carline for purposes of this additional information into the following portions: the portion assembled in the U.S./Canada and the portions assembled in each other country.

(3) A manufacturer selecting this option for a particular carline shall provide the specified additional information on the labels of all vehicles within the carline, providing the U.S./Canadian content that corresponds to the U.S./Canadian content of the manufacturing location shown as the final assembly point (with all U.S. and Canadian locations considered as a single assembly point) on the label.

(f) A final stage manufacturer of vehicles assembled in multiple stages need not provide the U.S./Canadian Parts Content or Major Foreign Sources items of the label otherwise required under paragraphs (a)(1) and (2) of this section.

(g) A manufacturer that produces a total of fewer than 1000 passenger motor vehicles in a model year need not provide the U.S./Canadian Parts Content or Major Foreign Sources items of the label otherwise required under paragraphs (a)(1) and (2) of this section.

(h) *Requests for information and certifications relevant to information on the label.* (1) Each manufacturer and allied supplier shall request its suppliers to provide directly to it the information and certifications specified by this part which are necessary for the manufacturer/allied supplier to carry out its responsibilities under this part. The information shall be requested sufficiently early to enable the manufacturer to meet the timing requirements specified by this part.

(2) For requests made by manufacturers or allied suppliers to outside suppliers:

(i) The requester shall indicate that the request is being made pursuant to 49 CFR part 583, and that the regulation is administered by the National Highway Traffic Safety Administration;

(ii) The requester shall indicate that 49 CFR part 583 requires outside suppliers to provide specified information upon the request of a manufacturer or allied supplier to which it supplies passenger motor vehicle equipment and that, to the best of the requester's knowledge, the outside supplier is required to provide the requested information;

(iii) If any information other than that required by 49 CFR part 583 is requested, the requester shall indicate which information is required by 49 CFR part 583 and which is not;

(iv) The requester shall indicate that 49 CFR part 583 specifies that while information may be requested by an earlier date, the outside supplier is not required to provide the information until the date specified by the requester or the date 45 days after receipt of the request, whichever is later.

(i) *Carlines assembled in more than one assembly plant.* (1) If a carline is assembled in more than one assembly plant, the manufacturer may, at its option, add the following additional information at the end of the explanatory note specified in paragraph (a)(6) of this section, with the specified information inserted in the places indicated:

Two or more assembly plants produce the vehicles in this carline. The vehicles assembled at the plant where this vehicle was assembled have a U.S./Canadian parts content of [__]%.

(2) A manufacturer selecting this option shall divide the carline for purposes of this additional information into portions representing each assembly plant.

(3) A manufacturer selecting this option for a particular carline shall provide the specified additional information on the labels of all vehicles within the carline.

[59 FR 37330, July 21, 1994, as amended at 60 FR 14229, Mar. 16, 1995; 60 FR 47893, Sept. 15, 1995; 64 FR 40780, July 28, 1999]

§ 583.6 Procedure for determining U.S./Canadian parts content.

(a) Each manufacturer, except as specified in § 583.5 (f) and (g), shall determine the percentage U.S./Canadian Parts Content for each carline on a model year basis. This determination shall be made before the beginning of each model year. Items of equipment produced at the final assembly point (but not as part of final assembly) are treated in the same manner as if they were supplied by an allied supplier. All value otherwise added at the final assembly point and beyond, including all final assembly costs, is excluded from the calculation of U.S./Canadian parts content. The country of origin of nuts, bolts, clips, screws, pins, braces, gasoline, oil, blackout, phosphate rinse, windshield washer fluid, fasteners, tire assembly fluid, rivets, adhesives, grommets, and wheel weights, used in final assembly of the vehicle, is considered to be the country where final assembly of the vehicle takes place.

(b) *Determining the value of items of equipment.* (1) For items of equipment received at the final assembly point, the value is the price paid by the manufacturer for the equipment as delivered to the final assembly point.

(2) For items of equipment produced at the final assembly point (but not as part of final assembly), the value is the fair market price that a manufacturer of similar size and location would pay a supplier for such equipment.

(3) For items of equipment received at the factory or plant of an allied supplier, the value is the price paid by the allied supplier for the equipment as delivered to its factory or plant.

(c) *Determining the U.S./Canadian percentage of the value of items of equipment.* (1) Equipment supplied by an outside supplier to a manufacturer or allied supplier is considered:

(i) 100 percent U.S./Canadian, if 70 percent or more of its value is added in the United States and/or Canada; and

(ii) To otherwise have the actual percent of its value added in the United States and/or Canada, rounded to the nearest five percent.

(2) The extent to which an item of equipment supplied by an allied supplier is considered U.S./Canadian is determined by dividing the value added

in the United States and/or Canada by the total value of the equipment. The resulting number is multiplied by 100 to determine the percentage U.S./Canadian content of the equipment.

(3) In determining the value added in the United States and/or Canada of equipment supplied by an allied supplier, any equipment that is delivered to the allied supplier by an outside supplier and is incorporated into the allied supplier's equipment, is considered:

(i) 100 percent U.S./Canadian, if at least 70 percent of its value is added in the United States and/or Canada; and

(ii) To otherwise have the actual percent of its value added in the United States and/or Canada, rounded to the nearest five percent.

(4)(i) Value added in the United States and/or Canada by an allied supplier or outside supplier includes—

(A) The value added in the U.S. and/or Canada for materials used by the supplier, determined according to (4)(ii) for outside suppliers and (4)(iii) for allied suppliers, plus,

(B) For passenger motor vehicle equipment assembled or produced in the U.S. or Canada, the value of the difference between the price paid by the manufacturer or allied supplier for the equipment, as delivered to its factory or plant, and the total value of the materials in the equipment.

(ii) Outside suppliers of passenger motor vehicle equipment will determine the value added in the U.S. and/or Canada for materials in the equipment as specified in paragraphs (A) and (B).

(A)(*1*) For any material used by the supplier which was produced or assembled in the U.S. or Canada, the supplier will subtract from the total value of the material any value that was not added in the U.S. and/or Canada. The determination of the value that was not added in the U.S. and/or Canada shall be a good faith estimate based on information that is available to the supplier, e.g., information in its records, information it can obtain from its suppliers, the supplier's knowledge of manufacturing processes, etc.

(*2*) The supplier shall consider the amount of value added and the location in which that value was added—

(*i*) At each earlier stage, counting from the time of receipt of a material by the supplier, back to and including the two closest stages each of which represented a substantial transformation into a new and different product with a different name, character and use.

(*ii*) The value of materials used to produce a product in the earliest of these two substantial transformation stages shall be treated as value added in the country in which that stage occurred.

(B) For any material used by the supplier which was imported into the United States or Canada from a third country, the value added in the United States and/or Canada is presumed to be zero. However, if documentation is available to the supplier which identifies value added in the United States and/or Canada for that material (determined according to the principles set forth in (A), such value added in the United States and/or Canada is counted.

(iii) Allied suppliers of passenger motor vehicle equipment shall determine the value that is added in the U.S. and/or Canada for materials in the equipment in accordance with (c)(3).

(iv) For the minor items listed in the §583.4 definition of ''passenger motor vehicle equipment'' as being excluded from that term, outside and allied suppliers may, to the extent that they incorporate such items into their equipment, treat the cost of the minor items as value added in the country of assembly.

(v) For passenger motor vehicle equipment which is imported into the territorial boundaries of the United States or Canada from a third country, the value added in the United States and/or Canada is presumed to be zero. However, if documentation is available to the supplier which identifies value added in the United States and/or Canada for that equipment (determined according to the principles set forth in the rest of (c)(4)), such value added in the United States and/or Canada is counted.

(vi) The payment of duty does not result in value added in the United States and/or Canada.

(5) Except as provided in paragraph (c)(6) of this section, if a manufacturer

or allied supplier does not receive information from one or more of its suppliers concerning the U.S./Canadian content of particular equipment, the U.S./Canadian content of that equipment is considered zero. This provision does not affect the obligation of manufacturers and allied suppliers to request this information from their suppliers or the obligation of the suppliers to provide the information.

(6) If a manufacturer or allied supplier requests information in a timely manner from one or more of its outside suppliers concerning the U.S./Canadian content of particular equipment, but does not receive that information despite a good faith effort to obtain it, the manufacturer or allied supplier may make its own good faith value added determinations, subject to the following provisions:

(i) The manufacturer or allied supplier shall make the same value added determinations as would be made by the outside supplier;

(ii) The manufacturer or allied supplier shall consider the amount of value added and the location in which the value was added for all of the stages that the outside supplier would be required to consider;

(iii) The manufacturer or allied supplier may determine that particular value is added in the United States and/or Canada only if it has a good faith basis to make that determination;

(iv) A manufacturer and its allied suppliers may, on a combined basis, make value added determinations for no more than 10 percent, by value, of a carline's total parts content from outside suppliers;

(v) Value added determinations made by a manufacturer or allied supplier under this paragraph shall have the same effect as if they were made by the outside supplier;

(vi) This provision does not affect the obligation of outside suppliers to provide the requested information.

(d) *Determination of the U.S./Canadian percentage of the total value of a carline's passenger motor vehicle equipment.* The percentage of the value of a carline's passenger motor vehicle equipment that is U.S./Canadian is determined by—

(1) Adding the total value of all of the equipment (regardless of country of origin) expected to be installed in that carline during the next model year;

(2) Dividing the value of the U.S./Canadian content of such equipment by the amount calculated in paragraph (d)(1) of this section, and

(3) Multiplying the resulting number by 100.

(e) *Alternative calculation procedures.* (1) A manufacturer may submit a petition to use calculation procedures based on representative or statistical sampling, as an alternative to the calculation procedures specified in this section to determine U.S./Canadian parts content and major sources of foreign parts content.

(2) Each petition must—

(i) Be submitted at least 120 days before the manufacturer would use the alternative procedure;

(ii) Be written in the English language;

(iii) Be submitted in three copies to: Administrator, National Highway Traffic Safety Administration, 400 Seventh Street SW., Washington, DC 20590;

(iv) State the full name and address of the manufacturer;

(v) Set forth in full the data, views and arguments of the manufacturer that would support granting the petition, including—

(A) the alternative procedure, and

(B) analysis demonstrating that the alternative procedure will produce substantially equivalent results to the procedure set forth in this section;

(vi) Specify and segregate any part of the information and data submitted in the petition that is requested to be withheld from public disclosure in accordance with part 512 of this chapter (the basic alternative procedure and basic supporting analysis must be provided as public information, but confidential business information may also be used in support of the petition).

(3) The NHTSA publishes in the FEDERAL REGISTER, affording opportunity for comment, a notice of each petition containing the information required by this part. A copy of the petition is placed in the public docket. However, if NHTSA finds that a petition does not contain the information required by this part, it so informs the petitioner,

pointing out the areas of insufficiency and stating that the petition will not receive further consideration until the required information is submitted.

(4) If the Administrator determines that the petition does not contain adequate justification, he or she denies it and notifies the petitioner in writing, explaining the reasons for the denial. A copy of the letter is placed in the public docket.

(5) If the Administrator determines that the petition contains adequate justification, he or she grants it, and notifies the petitioner in writing. A copy of the letter is placed in the public docket.

(6) The Administrator may attach such conditions as he or she deems appropriate to a grant of a petition, which the manufacturer must follow in order to use the alternative procedure.

[60 FR 47894, Sept. 15, 1995; as amended at 61 FR 46390, Sept. 3, 1996; 62 FR 33761, June 23, 1997; 64 FR 40780, July 28, 1999]

§ 583.7 Procedure for determining major foreign sources of passenger motor vehicle equipment.

(a) Each manufacturer, except as specified in § 583.5(f) and (g), shall determine the countries, if any, which are major foreign sources of passenger motor vehicle equipment and the percentages attributable to each such country for each carline on a model year basis, before the beginning of each model year. The manufacturer need only determine this information for the two such countries with the highest percentages. Items of equipment produced at the final assembly point (but not as part of final assembly) are treated in the same manner as if they were supplied by an allied supplier. In making determinations under this section, the U.S. and Canada are treated together as if they were one (non-foreign) country. The country of origin of nuts, bolts, clips, screws, pins, braces, gasoline, oil, blackout, phosphate rinse, windshield washer fluid, fasteners, tire assembly fluid, rivets, adhesives, grommets, and wheel weights, used in final assembly of the vehicle, is considered to be the country where final assembly of the vehicle takes place.

(b) *Determining the value of items of equipment.* The value of each item of equipment is determined in the manner specified in § 583.6(b).

(c) *Determining the country of origin of items of equipment.* (1) Except as provided in (c)(2), the country of origin of each item is the country which contributes the greatest amount of value added to that item (treating the U.S. and Canada together).

(2) Instead of making country of origin determinations in the manner specified in (c)(1), a manufacturer may, at its option, use any other methodology that is used for customs purposes (U.S. or foreign), so long as a consistent methodology is employed for all items of equipment, and the U.S. and Canada are treated together.

(d) *Determination of the percentage of the total value of a carline's passenger motor vehicle equipment which is attributable to individual countries other than the U.S. and Canada.* The percentage of the value of a carline's passenger motor vehicle equipment that is attributable to each country other than the U.S. and Canada is determined on a model year basis by—

(1) Adding up the total value of all of the passenger motor vehicle equipment (regardless of country of origin) expected to be installed in that carline during the next model year;

(2) Adding up the value of such equipment which originated in each country other than the U.S. or Canada;

(3) Dividing the amount calculated in paragraph (d)(2) of this section for each country by the amount calculated in paragraph (d)(1) of this section, and multiplying each result by 100.

(e) A country is a major foreign source of passenger motor vehicle equipment for a carline only if the country is one other than the U.S. or Canada and if 15 or more percent of the total value of the carline's passenger motor vehicle equipment is attributable to the country.

(f) In determining the percentage of the total value of a carline's passenger motor vehicle equipment which is attributable to individual countries other than the U.S. and Canada, no value which is counted as U.S./Canadian parts content is also counted as being

value which originated in a country other than the U.S. or Canada.

[59 FR 37330, July 21, 1994, as amended at 60 FR 47895, Sept. 15, 1995; 64 FR 40781, July 28, 1999]

§ 583.8 Procedure for determining country of origin for engines and transmissions (for purposes of determining the information specified by §§ 583.5(a)(4) and 583.5(a)(5) only).

(a) Each supplier of an engine or transmission shall determine the country of origin once a year for each engine and transmission. The origin of engines shall be calculated for engines of the same displacement produced at the same plant. The origin for transmissions shall be calculated for transmissions of the same type produced at the same plant. Transmissions are of the same type if they have the same attributes including: Drive line application, number of forward gears, controls, and layout. The U.S. and Canada are treated separately in making such determination.

(b) The value of an engine or transmission is determined by first adding the prices paid by the manufacturer of the engine/transmission for each component comprising the engine/transmission, as delivered to the assembly plant of the engine/transmission, and the fair market value of each individual part produced at the plant. The assembly and labor costs incurred for the final assembly of the engine/transmission are then added to determine the value of the engine or transmission.

(c) *Determining the country of origin of components.* (1) Except as provided in (c)(2), the country of origin of each item of equipment is the country which contributes the greatest amount of value added to that item (the U.S. and Canada are treated separately).

(2) Instead of making country of origin determinations in the manner specified in (c)(1), a manufacturer may, at its option, use any other methodology that is used for customs purposes (U.S. or foreign), so long as a consistent methodology is employed for all components.

(d) *Determination of the total value of an engine/transmission which is attributable to individual countries.* The value of an engine/transmission that is attributable to each country is determined by adding the total value of all of the components installed in that engine/transmission which originated in that country. For the country where final assembly of the engine/transmission takes place, the assembly and labor costs incurred for such final assembly are also added.

(e) The country of origin of each engine and the country of origin of each transmission is the country which contributes the greatest amount of value added to that item of equipment (the U.S. and Canada are treated separately).

[59 FR 37330, July 21, 1994, as amended at 60 FR 47895, Sept. 15, 1995; 64 FR 40781, July 28, 1999]

§ 583.9 Attachment and maintenance of label.

(a) *Attachment of the label.* (1) Except as provided in (a)(2), each manufacturer shall cause the label required by § 583.5 to be affixed to each new passenger motor vehicle before the vehicle is delivered to a dealer.

(2) For vehicles which are delivered to a dealer prior to the introduction date for the model in question, each manufacturer shall cause the label required by § 583.5 to be affixed to the vehicle prior to such introduction date.

(b) *Maintenance of the label.* (1) Each dealer shall cause to be maintained each label on the new passenger motor vehicles it receives until after such time as a vehicle has been sold to a consumer for purposes other than resale.

(2) If the manufacturer of a passenger motor vehicle provides a substitute label containing corrected information, the dealer shall replace the original label with the substitute label.

(3) If a label becomes damaged so that the information it contains is not legible, the dealer shall replace it with an identical, undamaged label.

§ 583.10 Outside suppliers of passenger motor vehicle equipment.

(a) For each unique type of passenger motor vehicle equipment for which a

manufacturer or allied supplier requests information, the outside supplier shall provide the manufacturer/allied supplier with a certificate providing the following information:

(1) The name and address of the supplier;

(2) A description of the unique type of equipment;

(3) The price of the equipment to the manufacturer or allied supplier;

(4) A statement that the equipment has, or does not have, at least 70 percent of its value added in the United States and Canada, determined under § 583.6(c);

(5) For equipment which has less than 70 percent of its value added in the United States and Canada,

(i) The country of origin of the equipment, determined under § 583.7(c); and

(ii) The percent of its value added in the United States and Canada, to the nearest 5 percent, determined under § 583.6(c).

(6) For equipment that may be used in an engine or transmission, the country of origin of the equipment, determined under § 583.8(c);

(7) A certification for the information, pursuant to § 583.13, and the date (at least giving the month and year) of the certification.

(8) A single certificate may cover multiple items of equipment.

(b) The information and certification required by paragraph (a) of this section shall be provided to the manufacturer or allied supplier no later than 45 days after receipt of the request, or the date specified by the manufacturer/allied supplier, whichever is later. (A manufacturer or allied supplier may request that the outside supplier voluntarily provide the information and certification at an earlier date.)

(c)(1) Except as provided in paragraph (c)(2) of this section, the information provided in the certificate shall be the supplier's best estimates of price, content, and country of origin for the unique type of equipment expected to be supplied during the 12 month period beginning on the first July 1 after receipt of the request. If the unique type of equipment supplied by the supplier is expected to vary with respect to price, content, and country of origin during that period, the supplier shall base its estimates on expected averages for these factors.

(2) The 12 month period specified in (c)(1) may be varied in time and length by the manufacturer or allied supplier if it determines that the alteration is not likely to result in less accurate information being provided to consumers on the label required by this part.

(d) For outside suppliers of engines and transmissions, the information and certification required by this section is in addition to that required by § 583.12.

[59 FR 37330, July 21, 1994, as amended at 64 FR 40781, July 28, 1999]

§ 583.11 Allied suppliers of passenger motor vehicle equipment.

(a) For each unique type of passenger motor vehicle equipment which an allied supplier supplies to the manufacturer with which it is allied, the allied supplier shall provide the manufacturer with a certificate providing the following information:

(1) The name and address of the supplier;

(2) A description of the unique type of equipment;

(3) The price of the equipment to the manufacturer;

(4) The percentage U.S./Canadian content of the equipment, determined under § 583.6(c);

(5) The country of origin of the equipment, determined under § 583.7(c);

(6) For equipment that may be used in an engine or transmission, the country of origin of the equipment, determined under § 583.8(c);

(7) A certification for the information, pursuant to § 583.13, and the date (at least giving the month and year) of the certification.

(8) A single certificate may cover multiple items of equipment.

(b)(1) Except as provided in paragraph (b)(2) of this section, the information provided in the certificate shall be the supplier's best estimates of price, content, and country of origin for the unique type of equipment expected to be supplied during the 12 month period beginning on the first July 1 after receipt of the request. If the unique type of equipment supplied by the supplier is expected to vary with respect to price, content, and country

of origin during that period, the supplier shall base its estimates on expected averages for these factors.

(2) The 12 month period specified in (b)(1) may be varied in time and length by the manufacturer if it determines that the alteration is not likely to result in less accurate information being provided to consumers on the label required by this part.

(c) [Reserved]

(d) For allied suppliers of engines and transmissions, the information and certification required by this section is in addition to that required by § 583.12.

§ 583.12 Suppliers of engines and transmissions.

(a) For each engine or transmission for which a manufacturer or allied supplier requests information, the supplier of such engine or transmission shall provide the manufacturer or allied supplier with a certificate providing the following information:

(1) The name and address of the supplier;

(2) A description of the engine or transmission;

(3) The country of origin of the engine or transmission, determined under § 583.8;

(4) A certification for the information, pursuant to § 583.13, and the date (at least giving the month and year) of the certification.

(b) The information provided in the certificate shall be the supplier's best estimate of country of origin for the unique type of engine or transmission. If the unique type of equipment used in the engine or transmission is expected to vary with respect to price, content, and country of origin during that period, the supplier shall base its country of origin determination on expected averages for these factors.

(c) The information and certification required by paragraph (a) of this section shall be provided by outside suppliers to the manufacturer or allied supplier no later than 45 days after receipt of the request, or the date specified by the manufacturer/allied supplier, whichever is later. (A manufacturer or allied supplier may request that the outside supplier voluntarily provide the information and certification at an earlier date.)

(d) In the event that, during a model year, a supplier of engines or transmissions produces an engine of a new displacement or transmission of a new type or produces the same engine displacement or transmission in a different plant, the supplier shall notify the manufacturer of the origin of the new engine or transmission prior to shipment of the first engine or transmission that will be installed in a passenger motor vehicle intended for public sale.

(e) A single certificate may cover multiple engines or transmissions. If a certificate provided in advance of the delivery of an engine or transmission becomes inaccurate because of changed circumstances, a corrected certificate shall be provided no later than the time of delivery of the engine or transmission.

(f) For suppliers of engines and transmissions, the information and certification required by this section is in addition to that required by §§ 583.10 and 583.11.

§ 583.13 Supplier certification and certificates.

Each supplier shall certify the information on each certificate provided under §§ 583.10, 583.11, and 583.12 by including the following phrase on the certificate: ''This information is certified in accordance with DOT regulations.'' The phrase shall immediately precede the other information on the certificate. The certificate may be submitted to a manufacturer or allied supplier in any mode (e.g., paper, electronic) provided the mode contains all information in the certificate.

§ 583.14 Currency conversion rate.

For purposes of calculations of content value under this part, manufacturers and suppliers shall calculate exchange rates using the methodology set forth in this section.

(a) *Manufacturers.* (1) Unless a manufacturer has had a petition approved by the Environmental Protection Agency under 40 CFR 600.511–80(b)(1), for all calculations made by the manufacturer as a basis for the information provided on the label required by § 583.5, manufacturers shall take the mean of the exchange rates in effect at the end of

each quarter set by the Federal Reserve Bank of New York for twelve calendar quarters prior to and including the calendar quarter ending one year prior to the date that the manufacturer submits information for a carline under § 583.17.

(2) A manufacturer that has had a petition approved by the Environmental Protection Agency under 40 CFR 600.511–80(b)(1), which provides for a different method of determining exchange rates, shall use the same method as a basis for the information provided on the label required by § 583.5, and shall inform the Administrator of the exchange rate method it is using at the time the information required by § 583.5 is submitted.

(b) *Suppliers*. For all calculations underlying the information provided on each certificate required by §§ 583.10, 583.11, and 583.12, suppliers shall take the mean of the exchange rates in effect at the end of each quarter set by the Federal Reserve Bank of New York for twelve calendar quarters prior to and including the calendar quarter ending one year prior to the date of such certificate.

§ 583.15 Joint ownership.

(a) A carline jointly owned and/or produced by more than one manufacturer shall be attributed to the single manufacturer that markets the carline, subject to paragraph (b) of this section.

(b)(1) The joint owners of a carline may designate, by written agreement, the manufacturer of record of that carline.

(2) The manufacturer of record is responsible for compliance with all the manufacturer requirements in this part with respect to the jointly owned carline. However, carline determinations must be consistent with § 583.4(3).

(3) A designation under this section of a manufacturer of record is effective beginning with the first model year beginning after the conclusion of the written agreement, or, if the joint owners so agree in writing, with a specified later model year.

(4) Each manufacturer of record shall send to the Administrator written notification of its designation as such not later than 30 days after the conclusion of the written agreement, and state the carline of which it is considered the manufacturer, the names of the other persons which jointly own the carline, and the name of the person, if any, formerly considered to be the manufacturer of record.

(5) The joint owners of a carline may change the manufacturer of record for a future model year by concluding a written agreement before the beginning of that model year.

(6) The allied suppliers for the jointly owned carline are the suppliers that are wholly owned by any of the manufacturers of the jointly owned carline.

§ 583.16 Maintenance of records.

(a) *General*. Each manufacturer of new passenger motor vehicles and each supplier of passenger motor vehicle equipment subject to this part shall establish, maintain, and retain in organized and indexed form, records as specified in this section. All records, including the certificates provided by suppliers, may be stored in any mode provided the mode contains all information in the records and certificates.

(b) *Manufacturers*. Each manufacturer shall maintain all records which provide a basis for the information it provides on the labels required by § 583.5, including, but not limited to, certificates from suppliers, parts lists, calculations of content, and relevant contracts with suppliers. The records shall be maintained for five years after December 31 of the model year to which the records relate.

(c) *Suppliers*. Each supplier shall maintain all records which form a basis for the information it provides on the certificates required by §§ 583.10, 583.11, and 583.12, including, but not limited to, calculations of content, certificates from suppliers, and relevant contracts with manufacturers and suppliers. The records shall be maintained for six years after December 31 of the calendar year set forth in the date of each certificate.

§ 583.17 Reporting.

For each model year, manufacturers shall submit to the Administrator 3 copies of the information required by § 583.5(a) to be placed on a label for each carline. The information for each

carline shall be submitted not later than the date the first vehicle of the carline is offered for sale to the ultimate purchaser.

PART 585—PHASE-IN REPORTING REQUIREMENTS

Subpart A—General

Sec.
585.1 Definitions.
585.2 Phase-in reports.
585.3 Vehicles produced by more than one manufacturer.
585.4 Petitions to extend period to file report.

Subpart B—Advanced Air Bag Phase-in Reporting Requirements

585.11 Scope.
585.12 Purpose.
585.13 Applicability.
585.14 Definitions.
585.15 Reporting requirements.
585.16 Records.

Subpart C—Rear Inboard Lap/Shoulder Belt Phase-in Reporting Requirements

585.21 Scope.
585.22 Purpose.
585.23 Applicability.
585.24 Reporting requirements.
585.25 Records.

Subpart D—Appendix A–1 of FMVSS No. 208 Phase-in Reporting Requirements

585.31 Scope.
585.32 Purpose.
585.33 Applicability.
585.34 Definitions.
585.35 Response to inquiries.
585.36 Reporting requirements.
585.37 Records.

Subpart E—Fuel System Integrity Phase-in Reporting Requirements

585.41 Scope.
585.42 Purpose.
585.43 Applicability.
585.44 Response to inquiries.
585.45 Reporting requirements.
585.46 Records.

Subpart F—Tires for Motor Vehicles with a GVWR of 10,000 Pounds or Less Phase-in Reporting Requirements

585.51 Scope.
585.52 Purpose.
585.53 Applicability.
585.54 Response to inquiries.
585.55 Reporting requirements.
585.56 Records.

Subpart G—Tire Pressure Monitoring System Phase-in Reporting Requirements

585.61 Scope.
585.62 Purpose.
585.63 Applicability.
585.64 Definitions.
585.65 Response to inquiries.
585.66 Reporting requirements.
585.67 Records.
585.68 Petition to extend period to file report.

Subpart H—Side Impact Protection Phase-in Reporting Requirements

585.71 Scope.
585.72 Purpose.
585.73 Applicability.
585.74 Definitions.
585.75 Response to inquiries.
585.76 Reporting requirements.
585.77 Records.

Subpart I—Electronic Stability Control System Phase-In Reporting Requirements

585.81 Scope.
585.82 Purpose.
585.83 Applicability.
585.84 Definitions.
585.85 Response to inquiries.
585.86 Reporting requirements.
585.87 Records.
585.88 Petition to extend period to file report.

Subpart J—Head Restraints Phase-in Reporting Requirements

585.91 Scope.
585.92 Purpose.
585.93 Applicability.
585.94 Definitions.
585.95 Response to inquiries.
585.96 Reporting requirements.
585.97 Records.

Subpart L—Roof Crush Resistance Phase-in Reporting Requirements

585.111 Scope.
585.112 Purpose.
585.113 Applicability.
585.114 Definitions.
585.115 Response to inquiries.
585.116 Reporting requirements.
585.117 Records.

AUTHORITY: 49 U.S.C. 322, 30111, 30115, 30117, and 30166; delegation of authority at 49 CFR 1.50.

SOURCE: 69 FR 70916, Dec. 8, 2004, unless otherwise noted.

Subpart A—General

§ 585.1 Definitions.

(a) All terms defined in 49 U.S.C. 30102 are used in accordance with their statutory meaning.

(b) The terms *bus*, *gross vehicle weight rating* or *GVWR*, *motor vehicle*, *multipurpose passenger vehicle*, *passenger car*, and *truck* are used as defined in § 571.3 of this chapter.

(c) *Production year* means the 12-month period between September 1 of one year and August 31 of the following year, inclusive, unless otherwise specified.

§ 585.2 Phase-in reports.

Each report submitted to NHTSA under this part shall:

(a) Identify the manufacturer;

(b) State the full name, title, and address of the official responsible for preparing the report;

(c) Identify the production year being reported on;

(d) Contain a statement regarding whether or not the manufacturer complied with the requirements of the Federal motor vehicle safety standard addressed by the report, for the period covered by the report, and the basis for that statement;

(e) Be written in the English language; and

(f) Be submitted to: Administrator, National Highway Traffic Safety Administration, 400 Seventh Street, SW., Washington, DC 20590.

§ 585.3 Vehicles produced by more than one manufacturer.

Each manufacturer whose reporting of information is affected by one or more of the express written contracts permitted by a Federal Motor Vehicle Safety Standard subject to the reporting requirements of this part shall:

(a) Report the existence of each contract, including the names of all parties to the contract and explain how the contract affects the report being submitted.

(b) Report the number of vehicles covered by each contract in each production year.

§ 585.4 Petitions to extend period to file report.

A petition for extension of the time to submit a report required under this part shall be received not later than 15 days before the report is due. The petition shall be submitted to: Administrator, National Highway Traffic Safety Administration, 400 Seventh Street, SW., Washington, DC 20590. The filing of a petition does not automatically extend the time for filing a report. A petition will be granted only if the petitioner shows good cause for the extension, and if the extension is consistent with the public interest.

Subpart B—Advanced Air Bag Phase-in Reporting Requirements

§ 585.11 Scope.

This subpart establishes requirements for manufacturers of passenger cars and trucks, buses, and multipurpose passenger vehicles with a GVWR of 3,855 kg or less and an unloaded vehicle weight of 2,495 kg or less to submit reports, and maintain records related to the reports, concerning the number and identification of such vehicles that are certified as complying with the advanced air bag requirements of Standard No. 208, *Occupant crash protection* (49 CFR 571.208).

§ 585.12 Purpose.

The purpose of these reporting requirements is to aid the National Highway Traffic Safety Administration in determining whether a manufacturer has complied with the advanced air bag requirements of Standard No. 208 during the phase-ins of those requirements.

§ 585.13 Applicability.

This subpart applies to manufacturers of passenger cars and trucks, buses, and multipurpose passenger vehicles with a GVWR of 3,855 kg or less and an unloaded vehicle weight of 2,495 kg or less. However, this subpart does not apply to any manufacturers whose production consists exclusively of walk-in vans, vehicles designed to be sold exclusively to the U.S. Postal Service, vehicles manufactured in two or more stages, and vehicles that are altered

after previously having been certified in accordance with part 567 of this chapter. In addition, this subpart does not apply to manufacturers whose production of motor vehicles for the United States market is less than 5,000 vehicles in a production year.

§ 585.14 Definitions.

For the purposes of this subpart,

(a) *Phase one of the advanced air bag requirements of Standard No. 208* refers to the requirements set forth in S14.1, S14.2, S14.5.1(a), S14.5.2, S15.1, S15.2, S17, S19, S21, S23, and S25 of Federal Motor Vehicle Safety Standard No. 208, 49 CFR 571.208.

(b) *Phase two of the advanced air bag reporting requirements of Standard No. 208* refers to the requirements set forth in S14.3, S14.4, S14.5.1(b), S14.5.2, S15.1, S15.2, S17, S19, S21, S23, and S25 of Federal Motor Vehicle Safety Standard No. 208, 49 CFR 571.208.

(c) *Phase three of the advanced air bag reporting requirements of Standard No. 208* refers to the requirements set forth in S14.6 and S14.7 of Federal Motor Vehicle Safety Standard No. 208, 49 CFR 571.208.

(d) *Vehicles* means passenger cars and trucks, buses, and multipurpose passenger vehicles with a GVWR of 3,855 kg or less and an unloaded vehicle weight of 2,495 kg or less manufactured for sale in the United States whose production of motor vehicles for sale in the United States is equal to or greater than 5,000 vehicles in a production year, and does not mean walk-in vans, vehicles designed to be sold exclusively to the U.S. Postal Service, vehicles manufactured in two or more stages, and vehicles that are altered after previously having been certified in accordance with part 567 of this chapter.

[69 FR 70916, Dec. 8, 2004, as amended at 71 FR 51779, Aug. 31, 2006]

§ 585.15 Reporting requirements.

(a) *Advanced credit phase-in reporting requirements.* (1) Within 60 days after the end of production years ending August 31, 2000, August 31, 2001, August 31, 2002, and August 31, 2003, each manufacturer choosing to certify vehicles manufactured during any of those production years as complying with phase one of the advanced air bag requirements of Standard No. 208 shall submit a report to the National Highway Traffic Safety Administration providing the information specified in paragraph (c) of this section and in § 585.2 of this part.

(2) Within 60 days after the end of the production year ending August 31, 2007, each manufacturer choosing to certify vehicles manufactured during that production year as complying with phase two of the advanced air bag requirements of Standard No. 208 shall submit a report to the National Highway Traffic Safety Administration providing the information specified in paragraph (c) of this section and in § 585.2 of this part.

(3) Within 60 days after the end of the production year ending August 31, 2009, each manufacturer choosing to certify vehicles manufactured during that production year as complying with phase three of the advanced air bag requirements of Standard No. 208 shall submit a report to the National Highway Traffic Safety Administration providing the information specified in paragraph (c) of this section and in § 585.2 of this part.

(b) *Phase-in reporting requirements.* (1) Within 60 days after the end of the production years ending August 31, 2004, August 31, 2005, and August 31, 2006, each manufacturer shall submit a report to the National Highway Traffic Safety Administration regarding its compliance with phase one of the advanced air bag requirements of Standard No. 208 for its vehicles produced in that production year. The report shall provide the information specified in paragraph (d) of this section and in § 585.2 of this part. Each report shall also specify the number of advance credit vehicles, if any, which are being applied to the production year being reported on.

(2) Within 60 days after the end of production years ending August 31, 2008, August 31, 2009, and August 31, 2010, each manufacturer shall submit a report to the National Highway Traffic Safety Administration regarding its compliance with phase two of the advanced air bag requirements of Standard No. 208 for its vehicles produced in that production year. The report shall provide the information specified in paragraph (d) of this section and in

§ 585.2 of this part. Each report shall also specify the number of advance credit vehicles, if any, which are being applied to the production year being reported on.

(3) Within 60 days after the end of the production years ending August 31, 2010, August 31, 2011, and August 31, 2012, each manufacturer shall submit a report to the National Highway Traffic Safety Administration regarding its compliance with phase three of the advanced air bag requirements of Standard No. 208 for its vehicles produced in that production year. The report shall provide the information specified in paragraph (d) of this section and in § 585.2 of this part.

(c) *Advanced credit phase-in report content.* (1) With respect to the reports identified in section 585.15(a)(1), each manufacturer shall report for the production year for which the report is filed the number of vehicles, by make and model year, that meet the applicable advanced air bag requirements of Standard No. 208, and to which advanced air bag requirements the vehicles are certified.

(2) With respect to the report identified in section 585.15(a)(2), each manufacturer shall report the number of vehicles, by make and model year, that meet the applicable advanced air bag requirements of Standard No. 208, and to which the advanced air bag requirements the vehicles are certified.

(3) With respect to the report identified in section 585.15(a)(3), each manufacturer shall report the number of vehicles, by make and model year, that meet the applicable advanced air bag requirements of Standard No. 208, and to which the advanced air bag requirements the vehicles are certified.

(d) *Phase-in report content*—(1) *Basis for phase-in production requirements.* For production years ending August 31, 2003, August 31, 2004, August 31, 2005, August 31, 2007, August 31, 2008, August 31, 2009, August 31, 2010, and August 31, 2011, each manufacturer shall provide the number of vehicles manufactured in the current production year, or, at the manufacturer's option, for the current production year and each of the prior two production years if the manufacturer has manufactured vehicles during both of the two production years prior to the year for which the report is being submitted.

(2) *Production of complying vehicles.* Each manufacturer shall report for the production year for which the report is filed the number of vehicles, by make and model year, that meet the applicable advanced air bag requirements of Standard No. 208, and to which advanced air bag requirements the vehicles are certified. Provide this information separately for phase two and phase three of the advanced air bag reporting requirements.

[69 FR 70916, Dec. 8, 2004, as amended at 71 FR 51779, Aug. 31, 2006; 72 FR 62142, Nov. 2, 2007]

§ 585.16 Records.

Each manufacturer shall maintain records of the Vehicle Identification Number of each vehicle for which information is reported under § 585.15(c) until December 31, 2011. Each manufacturer shall maintain records of the Vehicle Identification Number of each vehicle for which information is reported under § 585.15(d)(2) until December 31, 2013.

[72 FR 62142, Nov. 2, 2007]

Subpart C—Rear Inboard Lap/Shoulder Belt Phase-In Reporting Requirements

§ 585.21 Scope.

This subpart establishes requirements for manufacturers of passenger cars and for trucks, buses, and multipurpose passenger vehicles with a GVWR of 4,536 kg (10,000 lb) or less to submit reports, and maintain records related to the reports, concerning the number and identification of such vehicles that are certified as complying with the Type 2 seat belt requirements for rear seating positions of Standard No. 208, *Occupant crash protection* (49 CFR 571.208).

§ 585.22 Purpose.

The purpose of these reporting requirements is to assist the National Highway Traffic Safety Administration in determining whether a manufacturer has complied with the Type 2 seat belt requirements for rear seating positions of Standard No. 208.

§ 585.23 Applicability.

This subpart applies to manufacturers of passenger cars and trucks, buses, and multipurpose passenger vehicles with a GVWR of 4,536 kg or less. However, this subpart does not apply to any manufacturers whose production consists exclusively of walk-in vans, vehicles designed to be sold exclusively to the U.S. Postal Service, vehicles manufactured in two or more stages, and vehicles that are altered after previously having been certified in accordance with part 567 of this chapter. In addition, this subpart does not apply to manufacturers that produce fewer than 5,000 vehicles annually for sale in the United States.

[72 FR 62142, Nov. 2, 2007]

§ 585.24 Reporting requirements.

(a) *Advanced credit phase-in reporting requirements.* Within 60 days after the end of the production year ending August 31, 2005, each manufacturer choosing to certify vehicles manufactured during that production year as complying with the Type 2 seat belt for each rear designated seating position requirements of Standard No. 208 shall submit a report to the National Highway Traffic Safety Administration providing the information specified in paragraph (c) of this section and in § 585.2 of this part.

(b) *Phase-in reporting requirements.* Within 60 days after the end of the production years ending August 31, 2006, and August 31, 2007, each manufacturer shall submit a report to the National Highway Traffic Safety Administration regarding its compliance with the Type 2 seat belt for each rear designated seating position requirements of Standard No. 208 for its vehicles produced in that production year. The report shall provide the information specified in paragraph (d) of this section and in § 585.2 of this part. Each report shall also specify the number of advance credit vehicles, if any, which are being applied to the production year being reported on.

(c) *Advanced credit phase-in report content.* With respect to the reports identified in section 585.24(a), each manufacturer shall report for the production year for which the report is filed the number of vehicles, by make and model year, that meet the applicable Type 2 seat belt for each rear designated seating position requirements of Standard No. 208.

(d) *Phase-in report content.* (1) Basis for phase-in production requirements. For production years ending August 31, 2006, and August 31, 2007, each manufacturer shall provide the number of vehicles manufactured in the current production year, or, at the manufacturer's option, for the current production year and each of the prior two production years if the manufacturer has manufactured vehicles during each production year prior to the year for which the report is being submitted.

(2) Production of complying vehicles. Each manufacturer shall report for the production year for which the report is filed the number of vehicles, by make and model year, that meet the applicable Type 2 seat belt for each rear designated seating position requirements of Standard No. 208.

§ 585.25 Records.

Each manufacturer shall maintain records of the Vehicle Identification Number of each vehicle for which information is reported under § 585.24(c) and (d)(2) until December 31, 2008.

Subpart D—Appendix A–1 of FMVSS No. 208 Phase-in Reporting Requirements

SOURCE: 73 FR 66801, Nov. 12, 2008, unless otherwise noted.

§ 585.31 Scope.

This part establishes requirements for manufacturers of passenger cars, and of trucks, buses and multipurpose passenger vehicles with a gross vehicle weight rating (GVWR) of 3,856 kilograms (kg) (8,500 pounds (lb)) or less, to submit a report, and maintain records related to the report, concerning the number of such vehicles that are certified as complying with S19, S21, and S23 of FMVSS No. 208 (49 CFR 571.208) when using the child restraint systems specified in Appendix A–1 of this standard.

§ 585.32 Purpose.

The purpose of these reporting requirements is to assist the National Highway Traffic Safety Administration in determining whether a manufacturer has complied with the requirements of Standard No. 208 when using the child restraint systems specified in Appendix A–1 of that standard.

§ 585.33 Applicability.

This part applies to manufacturers of passenger cars, and of trucks, buses and multipurpose passenger vehicles with a GVWR of 3,856 kg (8,500 lb) or less.

§ 585.34 Definitions.

(a) All terms defined in 49 U.S.C. 30102 are used in their statutory meaning.

(b) Bus, gross vehicle weight rating or GVWR, multipurpose passenger vehicle, passenger car, and truck are used as defined in § 571.3 of this chapter.

(c) Production year means the 12-month period between September 1 of one year and August 31 of the following year, inclusive.

(d) Limited line manufacturer means a manufacturer that sells three or fewer carlines, as that term is defined in 49 CFR 583.4, in the United States during a production year.

§ 585.35 Response to inquiries.

At any time during the production year ending August 31, 2010, each manufacturer shall, upon request from the Office of Vehicle Safety Compliance, provide information identifying the vehicles (by make, model and vehicle identification number) that have been certified as complying with the requirements of Standard No. 208 when using the child restraint systems specified in Appendix A–1 of that standard. The manufacturer's designation of a vehicle as a certified vehicle is irrevocable.

§ 585.36 Reporting Requirements.

(a) *Phase-in reporting requirements.* Within 60 days after the end of the production year ending August 31, 2010, each manufacturer shall submit a report to the National Highway Traffic Safety Administration concerning its compliance with requirements of Standard No. 208 when using the child restraint systems specified in Appendix A–1 of that standard for its vehicles produced in that year. Each report shall provide the information specified in paragraph (b) of this section and in section 585.2 of this part.

(b) *Phase-in report content—*

(1) *Basis for phase-in production goals.* Each manufacturer shall provide the number of vehicles manufactured in the current production year, or, at the manufacturer's option, in each of the three previous production years. A new manufacturer that is, for the first time, manufacturing passenger cars, trucks, multipurpose passenger vehicles or buses for sale in the United States must report the number of passenger cars, trucks, multipurpose passenger vehicles or buses manufactured during the current production year.

(2) *Production of complying vehicles.* Each manufacturer shall report on the number of vehicles that meet the requirements of Standard No. 208 when using the child restraint systems specified in Appendix A–1 of that standard.

§ 585.37 Records.

Each manufacturer shall maintain records of the Vehicle Identification Number for each vehicle for which information is reported under § 585.36 until December 31, 2013.

Subpart E—Fuel System Integrity Phase-In Reporting Requirements

§ 585.41 Scope.

This subpart establishes requirements for manufacturers of passenger cars, multipurpose passenger vehicles, trucks, and buses with a GVWR of 4,536 kg (10,000 lb) or less to respond to NHTSA inquiries, to submit reports, and to maintain records related to the reports, concerning the number of such vehicles that meet the upgraded requirements of Standard No. 301, *Fuel systems integrity* (49 CFR 571.301).

§ 585.42 Purpose.

The purpose of these requirements is to assist the National Highway Traffic Safety Administration in determining whether a manufacturer has complied

with the upgraded requirements of Standard No. 301.

§ 585.43 Applicability.

This subpart applies to manufacturers of passenger cars, multipurpose passenger vehicles, trucks and buses with a GVWR of 4,536 or less. However, this subpart does not apply to manufacturers that produce fewer than 5,000 vehicles annually for sale in the United States.

[72 FR 62142, Nov. 2, 2007]

§ 585.44 Response to inquiries.

During the production years ending August 31, 2007, August 31, 2008, and August 31, 2009, each manufacturer shall, upon request from the Office of Vehicle Safety Compliance, provide information identifying the vehicles (by make, model, and vehicle identification number) that have been certified as complying with the requirements of S6.2(b) of Standard No. 301. The manufacturer's designation of a vehicle as a certified vehicle is irrevocable.

§ 585.45 Reporting requirements.

(a) *General reporting requirements.* Within 60 days after the end of the production years ending August 31, 2007, August 31, 2008 and August 31, 2009, each manufacturer shall submit a report to the National Highway Traffic Safety Administration concerning its compliance with S6.2(b) of Standard No. 301 for its passenger cars, multipurpose passenger vehicles, trucks, and buses with a GVWR of less than 4,536 kg produced in that year. Each report shall provide the information specified in paragraph (b) of this section and in section 585.2 of this part.

(b) *Report content.* (1) Basis for statement of compliance. Each manufacturer shall provide the number of passenger cars, multipurpose passenger vehicles, trucks, and buses with a GVWR of 4,536 kg or less manufactured for sale in the United States for each of the three previous production years, or, at the manufacturer's option, for the previous production year. A new manufacturer that has not previously manufactured these vehicles for sale in the United States must report the number of such vehicles manufactured during the current production year.

(2) Production. Each manufacturer shall report for the production year for which the report is filed the number of passenger cars, multipurpose passenger vehicles, trucks, and buses with a GVWR of 4,536 kg or less that meet S6.2(b) or S6.3(b) of Standard No. 301.

§ 585.46 Records.

Each manufacturer shall maintain records of the Vehicle Identification Number for each vehicle for which information is reported under § 585.45(b)(2) until December 31, 2010.

Subpart F—Tires for Motor Vehicles with a GVWR of 10,000 Pounds or Less Phase-In Reporting Requirements

§ 585.51 Scope.

This subpart establishes requirements for manufacturers of new pneumatic tires for motor vehicles with a GVWR of 4,536 kg (10,000 lb) or less to respond to NHTSA inquiries, to submit reports, and to maintain records related to the reports, concerning the number of such tires that meet the requirements of Standard No. 139, *New pneumatic tires for light vehicles* (49 CFR 571.139).

§ 585.52 Purpose.

The purpose of these requirements is to assist the National Highway Traffic Safety Administration in determining whether a manufacturer has complied with the requirements of Standard No. 139.

§ 585.53 Applicability.

This subpart applies to manufacturers of tires for motor vehicles with a GVWR of 4,536 kg or less.

§ 585.54 Response to inquiries.

Each manufacturer shall, upon request from the Office of Vehicle Safety Compliance, provide information identifying the tires (by make, model, brand and tire identification number) that have been certified as complying with the requirements of Standard No. 139. The manufacturer's designation of a tire as a certified tire is irrevocable.

§ 585.55 Reporting requirements.

(a) *General reporting requirements.* Within 60 days after the end of the production years ending August 31, 2006 and August 31, 2007, each manufacturer shall submit a report to the National Highway Traffic Safety Administration concerning its compliance with Standard No. 139 for its tires produced in that year for motor vehicles with a GVWR of 4,536 kg or less. Each report shall provide the information specified in paragraph (b) of this section and in section 585.2 of this part.

(b) *Report content.* (1) Basis for statement of compliance. Each manufacturer shall provide the number of tires for motor vehicles with a GVWR of 4,536 kg or less manufactured for sale in the United States for each of the three previous production years, or, at the manufacturer's option, for the production year for which the report is filed. A new manufacturer that has not previously manufactured these tires for sale in the United States shall report the number of such tires manufactured during the current production year.

(2) Production. Each manufacturer shall report for the production year for which the report is filed the number of new pneumatic tires for motor vehicles with a GVWR of 4,536 kg or less that meet Standard No. 139.

§ 585.56 Records.

Each manufacturer shall maintain records of the tire identification number for each vehicle for which information is reported under § 585.55(b)(2) until December 31, 2008.

Subpart G—Tire Pressure Monitoring System Phase-in Reporting Requirements

SOURCE: 70 FR 18190, Apr. 8, 2005, unless otherwise noted.

§ 585.61 Scope.

This subpart establishes requirements for manufacturers of passenger cars, multipurpose passenger vehicles, trucks, and buses with a gross vehicle weight rating of 4,536 kilograms (10,000 pounds) or less, except those vehicles with dual wheels on an axle, to submit a report, and maintain records related to the report, concerning the number of such vehicles that meet the requirements of Standard No. 138, *Tire pressure monitoring systems* (49 CFR 571.138).

§ 585.62 Purpose.

The purpose of these reporting requirements is to assist the National Highway Traffic Safety Administration in determining whether a manufacturer has complied with Standard No. 138.

§ 585.63 Applicability.

This subpart applies to manufacturers of passenger cars, multipurpose passenger vehicles, trucks, and buses with a gross vehicle weight rating of 4,536 kilograms (10,000 pounds) or less, except those vehicles with dual wheels on an axle. However, this subpart does not apply to manufacturers whose production consists exclusively of vehicles manufactured in two or more stages, and vehicles that are altered after previously having been certified in accordance with part 567 of the chapter. In addition, this subpart does not apply to manufacturers whose production of motor vehicles for the United States market is less than 5,000 vehicles in a production year.

§ 585.64 Definitions.

Production year means the 12-month period between September 1 of one year and August 31 of the following year, inclusive.

§ 585.65 Response to inquiries.

At any time prior to August 31, 2007, each manufacturer must, upon request from the Office of Vehicle Safety Compliance, provide information identifying the vehicles (by make, model, and vehicle identification number) that have been certified as complying with Standard No. 138. The manufacturer's designation of a vehicle as a certified vehicle is irrevocable. Upon request, the manufacturer also must specify whether it intends to utilize either carry-forward or carry-backward credits, and the vehicles to which those credits relate.

§ 585.66 Reporting requirements.

(a) *General reporting requirements.* Within 60 days after the end of the production years ending August 31, 2006 and August 31, 2007, each manufacturer must submit a report to the National Highway Traffic Safety Administration concerning its compliance with Standard No. 138 (49 CFR 571.138) for its passenger cars, multipurpose passenger vehicles, trucks, and buses with a gross vehicle weight rating of less than 4,536 kilograms (10,000 pounds) produced in that year. Each report must—

(1) Identify the manufacturer;

(2) State the full name, title, and address of the official responsible for preparing the report;

(3) Identify the production year being reported on;

(4) Contain a statement regarding whether or not the manufacturer complied with the requirements of Standard No. 138 (49 CFR 571.138) for the period covered by the report and the basis for that statement;

(5) Provide the information specified in paragraph (b) of this section;

(6) Be written in the English language; and

(7) Be submitted to: Administrator, National Highway Traffic Safety Administration, 400 Seventh Street, SW., Washington, DC 20590.

(b) *Report content*—(1) *Basis for statement of compliance.* Each manufacturer must provide the number of passenger cars, multipurpose passenger vehicles, trucks, and buses with a gross vehicle weight rating of 4,536 kilograms (10,000 pounds) or less, except those vehicles with dual wheels on an axle, manufactured for sale in the United States for each reporting period as follows:

(i) *Period from October 5, 2005 to August 31, 2006.* The number shall be either the manufacturer's average annual production of vehicles manufactured on or after September 1, 2002, and before October 5, 2005, or, at the manufacturer's option, it shall be the manufacturer's production on or after October 5, 2005 and before September 1, 2006. A new manufacturer that has not previously manufactured these vehicles for sale in the United States must report the number of such vehicles manufactured during the production period on or after October 5, 2005 and before September 1, 2006.

(ii) *Period from September 1, 2006 to August 31, 2007.* The number shall be either the manufacturer's average annual production of vehicles manufactured on or after September 1, 2003, and before September 1, 2006, or, at the manufacturer's option, it shall be the manufacturer's production on or after September 1, 2006 and before September 1, 2007. A new manufacturer that has not previously manufactured these vehicles for sale in the United States must report the number of such vehicles manufactured during the production period on or after September 1, 2006 and before September 1, 2007.

(2) *Production.* Each manufacturer must report for the production period for which the report is filed: the total number of passenger cars, multipurpose passenger vehicles, trucks, and buses with a gross vehicle weight rating of 4,536 kilograms (10,000 pounds) or less that meet Standard No. 138 (49 CFR 571.138).

(3) *Statement regarding compliance.* Each manufacturer must provide a statement regarding whether or not the manufacturer complied with the TPMS requirements as applicable to the period covered by the report, and the basis for that statement. This statement must include an explanation concerning the use of any carry-forward and/or carry-backward credits.

(4) *Vehicles produced by more than one manufacturer.* Each manufacturer whose reporting of information is affected by one or more of the express written contracts permitted by S7.5.2 of Standard No. 138 (49 CFR 571.138) must:

(i) Report the existence of each contract, including the names of all parties to the contract, and explain how the contract affects the report being submitted.

(ii) Report the actual number of vehicles covered by each contract.

[70 FR 18190, Apr. 8, 2005, as amended at 70 FR 53101, Sept. 7, 2005]

§ 585.67 Records.

Each manufacturer must maintain records of the Vehicle Identification

Number for each vehicle for which information is reported under § 585.66(b)(2) until December 31, 2009.

§ 585.68 Petition to extend period to file report.

A manufacturer may petition for extension of time to submit a report under this Part. A petition will be granted only if the petitioner shows good cause for the extension and if the extension is consistent with the public interest. The petition must be received not later than 15 days before expiration of the time stated in § 585.66(a). The filing of a petition does not automatically extend the time for filing a report. The petition must be submitted to: Administrator, National Highway Traffic Safety Administration, 400 Seventh Street, SW., Washington, DC 20590.

Subpart H—Side Impact Protection Phase-in Reporting Requirements

SOURCE: 72 FR 51972, Sept. 11, 2007, unless otherwise noted.

§ 585.71 Scope.

This part establishes requirements for manufacturers of passenger cars, and of trucks, buses and multipurpose passenger vehicles with a gross vehicle weight rating (GVWR) of 4,536 kilograms (kg) (10,000 pounds) or less, to submit a report, and maintain records related to the report, concerning the number of such vehicles that meet the moving deformable barrier test requirements of S7 of Standard No. 214, *Side impact protection* (49 CFR 571.214), and the vehicle-to-pole test requirements of S9 of that standard.

§ 585.72 Purpose.

The purpose of these reporting requirements is to assist the National Highway Traffic Safety Administration in determining whether a manufacturer has complied with the requirements of Standard No. 214, *Side Impact Protection* (49 CFR 571.214).

§ 585.73 Applicability.

This part applies to manufacturers of passenger cars, and of trucks, buses and multipurpose passenger vehicles with a GVWR of 4,536 kg (10,000 lb) or less. However, this part does not apply to vehicles excluded by S2 and S5 of Standard No. 214 (49 CFR 571.214) from the requirements of that standard.

§ 585.74 Definitions.

(a) All terms defined in 49 U.S.C. 30102 are used in their statutory meaning.

(b) *Bus*, *gross vehicle weight rating* or *GVWR*, *multipurpose passenger vehicle*, *passenger car*, and *truck* are used as defined in § 571.3 of this chapter.

(c) *Production year* means the 12-month period between September 1 of one year and August 31 of the following year, inclusive.

(d) *Limited line manufacturer* means a manufacturer that sells three or fewer carlines, as that term is defined in 49 CFR 583.4, in the United States during a production year.

§ 585.75 Response to inquiries.

At any time during the production years ending August 31, 2011, August 31, 2012, August 31, 2013, and August 31, 2014, each manufacturer shall, upon request from the Office of Vehicle Safety Compliance, provide information identifying the vehicles (by make, model and vehicle identification number) that have been certified as complying with the moving deformable barrier test with advanced test dummies (S7.2) or the vehicles (by make, model and vehicle identification number) that have been certified as complying with the vehicle-to-pole test requirements (S9.1) of FMVSS No. 214 (49 CFR 571.214). The manufacturer's designation of a vehicle as a certified vehicle that meets S7.2 or S9.1 is irrevocable.

[73 FR 32485, June 9, 2008]

§ 585.76 Reporting requirements.

(a) *Advanced credit phase-in reporting requirements*. (1) Within 60 days after the end of the production years ending August 31, 2008, through August 31, 2014, each manufacturer choosing to certify vehicles manufactured during any of those production years as complying with the upgraded moving deformable barrier (S7.2 of Standard No. 214)(49 CFR 571.214) or vehicle-to-pole

requirements (S9) of Standard No. 214 shall submit a report to the National Highway Traffic Safety Administration providing the information specified in paragraph (c) of this section and in § 585.2 of this part.

(2) [Reserved]

(b) *Phase-in reporting requirements.* Within 60 days after the end of each of the production years ending August 31, 2011, August 31, 2012, August 31, 2013, and August 31, 2014, each manufacturer shall submit a report to the National Highway Traffic Safety Administration concerning its compliance with the moving deformable barrier requirements of S7 of Standard No. 214 and with the vehicle-to-pole requirements of S9 of that Standard for its vehicles produced in that year. Each report shall provide the information specified in paragraph (c) of this section and in section 585.2 of this part.

(c) *Advanced credit phase-in report content*—(1) *Production of complying vehicles.* With respect to the reports identified in § 585.76(a), each manufacturer shall report for the production year for which the report is filed the number of vehicles, by make and model year: That are certified as meeting the moving deformable barrier test requirements of S7.2 of Standard No. 214, *Side impact protection* (49 CFR 571.214), and that are certified as meeting the vehicle-to-pole test requirements of S9 of Standard No. 214.

(2) [Reserved]

(d) *Phase-in report content*—(1) *Basis for phase-in production goals.* Each manufacturer shall provide the number of vehicles manufactured in the current production year, or, at the manufacturer's option, in each of the three previous production years. A new manufacturer that is, for the first time, manufacturing passenger cars for sale in the United States must report the number of passenger cars manufactured during the current production year.

(2) *Production of complying vehicles.* Each manufacturer shall report for the production year being reported on, and each preceding production year, to the extent that vehicles produced during the preceding years are treated under Standard No. 214 as having been produced during the production year being reported on, information on the number of vehicles that meet the moving deformable barrier test requirements of S7 of Standard No. 214, *Side Impact Protection* (49 CFR 571.214), and the number of vehicles that meet the vehicle-to-pole test requirements of S9 of that standard.

[72 FR 51972, Sept. 11, 2007, as amended at 73 FR 32485, June 9, 2008]

§ 585.77 Records.

Each manufacturer shall maintain records of the Vehicle Identification Number for each vehicle for which information is reported under § 585.76 until December 31, 2018.

[73 FR 32485, June 9, 2008]

Subpart I—Electronic Stability Control System Phase-In Reporting Requirements

SOURCE: 72 FR 17316, Apr. 6, 2007, unless otherwise noted.

§ 585.81 Scope.

This subpart establishes requirements for manufacturers of passenger cars, multipurpose passenger vehicles, trucks, and buses with a gross vehicle weight rating of 4,536 kilograms (10,000 pounds) or less to submit a report, and maintain records related to the report, concerning the number of such vehicles that meet the requirements of Standard No. 126, *Electronic stability control systems* (49 CFR 571.126).

§ 585.82 Purpose.

The purpose of these reporting requirements is to assist the National Highway Traffic Safety Administration in determining whether a manufacturer has complied with Standard No. 126 (49 CFR 571.126).

§ 585.83 Applicability.

This subpart applies to manufacturers of passenger cars, multipurpose passenger vehicles, trucks, and buses with a gross vehicle weight rating of 4,536 kilograms (10,000 pounds) or less. However, this subpart does not apply to manufacturers whose production

consists exclusively of vehicles manufactured in two or more stages, and vehicles that are altered after previously having been certified in accordance with part 567 of this chapter. In addition, this subpart does not apply to manufacturers whose production of motor vehicles for the United States market is less than 5,000 vehicles in a production year.

§ 585.84 Definitions.

For the purposes of this subpart:

Production year means the 12-month period between September 1 of one year and August 31 of the following year, inclusive.

§ 585.85 Response to inquiries.

At any time prior to August 31, 2011, each manufacturer must, upon request from the Office of Vehicle Safety Compliance, provide information identifying the vehicles (by make, model, and vehicle identification number) that have been certified as complying with Standard No. 126 (49 CFR 571.126). The manufacturer's designation of a vehicle as a certified vehicle is irrevocable. Upon request, the manufacturer also must specify whether it intends to utilize carry-forward credits, and the vehicles to which those credits relate.

§ 585.86 Reporting requirements.

(a) *General reporting requirements.* Within 60 days after the end of the production years ending August 31, 2009, August 31, 2010, and August 31, 2011, each manufacturer must submit a report to the National Highway Traffic Safety Administration concerning its compliance with Standard No. 126 (49 CFR 571.126) for its passenger cars, multipurpose passenger vehicles, trucks, and buses with a gross vehicle weight rating of less than 4,536 kilograms (10,000 pounds) produced in that year. Each report must—

(1) Identify the manufacturer;

(2) State the full name, title, and address of the official responsible for preparing the report;

(3) Identify the production year being reported on;

(4) Contain a statement regarding whether or not the manufacturer complied with the requirements of Standard No. 126 (49 CFR 571.126) for the period covered by the report and the basis for that statement;

(5) Provide the information specified in paragraph (b) of this section;

(6) Be written in the English language; and

(7) Be submitted to: Administrator, National Highway Traffic Safety Administration, 400 Seventh Street, SW., Washington, DC 20590.

(b) *Report content*—(1) *Basis for statement of compliance.* Each manufacturer must provide the number of passenger cars, multipurpose passenger vehicles, trucks, and buses with a gross vehicle weight rating of 4,536 kilograms (10,000 pounds) or less, manufactured for sale in the United States for each of the three previous production years, or, at the manufacturer's option, for the current production year. A new manufacturer that has not previously manufactured these vehicles for sale in the United States must report the number of such vehicles manufactured during the current production year.

(2) *Production.* Each manufacturer must report for the production year for which the report is filed: the number of passenger cars, multipurpose passenger vehicles, trucks, and buses with a gross vehicle weight rating of 4,536 kilograms (10,000 pounds) or less that meet Standard No. 126 (49 CFR 571.126).

(3) *Statement regarding compliance.* Each manufacturer must provide a statement regarding whether or not the manufacturer complied with the ESC requirements as applicable to the period covered by the report, and the basis for that statement. This statement must include an explanation concerning the use of any carry-forward credits.

(4) *Vehicles produced by more than one manufacturer.* Each manufacturer whose reporting of information is affected by one or more of the express written contracts permitted by S8.6.2 of Standard No. 126 (49 CFR 571.126) must:

(i) Report the existence of each contract, including the names of all parties to the contract, and explain how the contract affects the report being submitted.

(ii) Report the actual number of vehicles covered by each contract.

§ 585.87 Records.

Each manufacturer must maintain records of the Vehicle Identification Number for each vehicle for which information is reported under § 585.86(b)(2) until December 31, 2013.

§ 585.88 Petition to extend period to file report.

A manufacturer may petition for extension of time to submit a report under this Part. A petition will be granted only if the petitioner shows good cause for the extension and if the extension is consistent with the public interest. The petition must be received not later than 15 days before expiration of the time stated in § 585.86(a). The filing of a petition does not automatically extend the time for filing a report. The petition must be submitted to: Administrator, National Highway Traffic Safety Administration, 400 Seventh Street, SW., Washington, DC 20590.

Subpart J—Head Restraints Phase-in Reporting Requirements

SOURCE: 72 FR 25523, May 4, 2007, unless otherwise noted.

§ 585.91 Scope.

This subpart establishes requirements for manufacturers of passenger cars, multipurpose passenger vehicles, trucks and buses with a GVWR of 4,536 kg or less to submit a report, and maintain records related to the report, concerning the number of vehicles that meet the requirements of Standard No. 202a.

§ 585.92 Purpose.

The purpose of these reporting requirements is to assist the National Highway Traffic Safety Administration in determining whether a manufacturer has complied with Standard No. 202a.

§ 585.93 Applicability.

This subpart applies to manufacturers of passenger cars, multipurpose passenger vehicles, trucks and buses with a GVWR of 4,536 kg or less. However, it does not apply to manufacturers whose production consists exclusively of vehicles that are manufactured in two or more stages or that are altered (within the meaning of 49 CFR 567.7) after having previously been certified in accordance with part 567 of this chapter.

§ 585.94 Definitions.

Production year means the 12-month period between September 1 of one year and August 31 of the following year, inclusive.

§ 585.95 Response to inquiries.

(a) *Production year ending August 31, 2010*. At any time during the production year, each manufacturer must, upon request from the Office of Vehicle Safety Compliance, provide information identifying the vehicles (by make, model and vehicle identification number) that have been certified as complying with § 571.202a without regard to any option to comply with the standard in § 571.202 or with the European regulations referenced in S4.3(a) of § 571.202.

(b) *Production year ending August 31, 2011*. At any time during the production year, each manufacturer must, upon request from the Office of Vehicle Safety Compliance, provide information identifying the vehicles (by make, model and vehicle identification number) that have been certified as complying with the requirements specified in § 571.202a for rear head restraints.

§ 585.96 Reporting requirements.

(a) *Production year ending August 31, 2010*—(1) *General reporting requirements*. Within 60 days after the end of the production year ending August 31, 2010, each manufacturer must submit a report to the National Highway Traffic Safety Administration concerning its compliance with the head restraint requirements specified in § 571.202a, without regard to any option to comply with the standard in § 571.202 or with the European regulations referenced in S4.3(a) of § 571.202, for its passenger cars, trucks, buses and multipurpose passenger vehicles produced in that year. The report must provide the information specified in paragraph (2) of this section and in § 585.2 of this part.

(2) *Report content*—(i) *Basis for phase-in production goals*. Each manufacturer

must provide the number of passenger cars and multipurpose passenger vehicles, trucks and buses with a GVWR of 4,536 kg or less manufactured for sale in the United States. The number must be either the manufacturer's average annual production of vehicles manufactured on or after September 1, 2007 and before September 1, 2010, or, at the manufacturer's option, the manufacturer's production on or after September 1, 2009 and before September 1, 2010. A new manufacturer that has not previously manufactured these vehicles for sale in the United States must report the number of such vehicles manufactured during the production period beginning on or after September 1, 2009 and before September 1, 2010.

(ii) *Production*. Each manufacturer must report for the production year ending August 31, 2010: The total number of passenger cars, multipurpose passenger vehicles, trucks, and buses with a gross vehicle weight rating of 4,536 kg or less that meet §571.202a, without regard to any option to comply with the standard in §571.202 or with the European regulations referenced in S4.3(a) of §571.202.

(b) *Production year ending August 31, 2011*—(1) *General reporting requirements*. Within 60 days after the end of the production year ending August 31, 2011, each manufacturer must submit a report to the National Highway Traffic Safety Administration concerning its compliance with the rear head restraint requirements specified in §571.202a. The report must provide the information specified in paragraph (2) of this section and in §585.2 of this part.

(2) *Report content*—(i) *Basis for phase-in production goals*. Each manufacturer must provide the number of passenger cars and multipurpose passenger vehicles, trucks and buses with a GVWR of 4,536 kg or less manufactured for sale in the United States with rear head restraints. The number must be either the manufacturer's average annual production of vehicles with rear head restraints manufactured on or after September 1, 2008 and before September 1, 2011, or, at the manufacturer's option, the manufacturer's production on or after September 1, 2010 and before September 1, 2011. A new manufacturer that has not previously manufactured these vehicles for sale in the United States must report the number of such vehicles manufactured during the production period on or after September 1, 2010 and before September 1, 2011.

(ii) *Production*. Each manufacturer must report for the production year ending August 31, 2011: The total number of passenger cars, multipurpose passenger vehicles, trucks, and buses with a gross vehicle weight rating of 4,536 kg or less that meet the rear head restraint requirements of §571.202a.

§585.97 Records.

Each manufacturer must maintain records of the Vehicle Identification Number for each vehicle for which information is reported under §585.96 until December 31, 2007.

Subpart L—Roof Crush Resistance Phase-in Reporting Requirements

SOURCE: 74 FR 22387, May 12, 2009, unless otherwise noted.

§585.111 Scope.

This subpart establishes requirements for manufacturers of passenger cars, multipurpose passenger vehicles, trucks, and buses with a gross vehicle weight rating of 2,722 kilograms (6,000 pounds) or less to submit a report, and maintain records related to the report, concerning the number of such vehicles that meet the requirements of Standard No. 216a; *Roof crush resistance; Upgraded standard* (49 CFR 571.216a).

§585.112 Purpose.

The purpose of these reporting requirements is to assist the National Highway Traffic Safety Administration in determining whether a manufacturer has complied with Standard No. 216a (49 CFR 571.216a).

§585.113 Applicability.

This subpart applies to manufacturers of passenger cars, multipurpose passenger vehicles, trucks, and buses with a gross vehicle weight rating of 2,722 kilograms (6,000 pounds) or less. However, this subpart does not apply to manufacturers whose production

consists exclusively of vehicles manufactured in two or more stages, and vehicles that are altered after previously having been certified in accordance with part 567 of this chapter. In addition, this subpart does not apply to manufacturers whose production of motor vehicles for the United States market is less than 5,000 vehicles in a production year.

§ 585.114 Definitions.

For the purposes of this subpart:

Production year means the 12-month period between September 1 of one year and August 31 of the following year, inclusive.

§ 585.115 Response to inquiries.

At any time prior to August 31, 2018, each manufacturer must, upon request from the Office of Vehicle Safety Compliance, provide information identifying the vehicles (by make, model, and vehicle identification number) that have been certified as complying with Standard No. 216a (49 CFR 571.216a). The manufacturer's designation of a vehicle as a certified vehicle is irrevocable. Upon request, the manufacturer also must specify whether it intends to utilize carry-forward credits, and the vehicles to which those credits relate.

§ 585.116 Reporting requirements.

(a) *General reporting requirements.* Within 60 days after the end of the production years ending August 31, 2013, August 31, 2014, and August 31, 2015, each manufacturer must submit a report to the National Highway Traffic Safety Administration concerning its compliance with Standard No. 216a (49 CFR 571.216a) for its passenger cars, multipurpose passenger vehicles, trucks, and buses with a gross vehicle weight rating of less than 2,722 kilograms (6,000 pounds) produced in that year. Each report must —

(1) Identify the manufacturer;

(2) State the full name, title, and address of the official responsible for preparing the report;

(3) Identify the production year being reported on;

(4) Contain a statement regarding whether or not the manufacturer complied with the requirements of Standard No. 216a (49 CFR 571.216a) for the period covered by the report and the basis for that statement;

(5) Provide the information specified in paragraph (b) of this section;

(6) Be written in the English language; and

(7) Be submitted to: Administrator, National Highway Traffic Safety Administration, 1200 New Jersey Avenue, SE., Washington, DC 20590.

(b) *Report content*—(1) *Basis for statement of compliance.* Each manufacturer must provide the number of passenger cars, multipurpose passenger vehicles, trucks, and buses with a gross vehicle weight rating of 2,722 kilograms (6,000 pounds) or less, manufactured for sale in the United States for each of the three previous production years, or, at the manufacturer's option, for the current production year. A new manufacturer that has not previously manufactured these vehicles for sale in the United States must report the number of such vehicles manufactured during the current production year.

(2) *Production.* Each manufacturer must report for the production year for which the report is filed: the number of passenger cars, multipurpose passenger vehicles, trucks, and buses with a gross vehicle weight rating of 2,722 kilograms (6,000 pounds) or less that meet Standard No. 216a (49 CFR 571.216a).

(3) *Statement regarding compliance.* Each manufacturer must provide a statement regarding whether or not the manufacturer complied with the requirements of Standard No. 216a (49 CFR 571.216a) as applicable to the period covered by the report, and the basis for that statement. This statement must include an explanation concerning the use of any carry-forward credits.

(4) *Vehicles produced by more than one manufacturer.* Each manufacturer whose reporting of information is affected by one or more of the express written contracts permitted by S8.6.2 of Standard No. 216a (49 CFR 571.216a) must:

(i) Report the existence of each contract, including the names of all parties to the contract, and explain how the contract affects the report being submitted.

(ii) Report the actual number of vehicles covered by each contract.

§ 585.117 Records.

Each manufacturer must maintain records of the Vehicle Identification Number for each vehicle for which information is reported under § 585.116(b)(2) until December 31, 2018.

PART 586 [RESERVED]

PART 587—DEFORMABLE BARRIERS

Subpart A—General

Sec.
587.1 Scope.
587.2 Purpose.
587.3 Application.

Subpart B—Side Impact Moving Deformable Barrier

587.4 Definitions.
587.5 Incorporated materials.
587.6 General description.
587.7–587.10 [Reserved]

Subpart C—Offset Deformable Barrier

587.11 [Reserved]
587.12 Incorporation by reference.
587.13 General description.
587.14 Deformable face component dimensions and material specifications.
587.15 Verification of aluminum honeycomb crush strength.
587.16 Adhesive bonding procedure.
587.17 Construction.
587.18 Dimensions of fixed rigid barrier.
587.19 Mounting.
FIGURES TO SUBPART C

AUTHORITY: 49 U.S.C. 322, 30111, 30115, 30117, and 30166; delegation of authority at 49 CFR 1.50.

SOURCE: 55 FR 45779, Oct. 30, 1990, unless otherwise noted.

EDITORIAL NOTE: Nomenclature changes to part 587 appear at 69 FR 18803, Apr. 9, 2004.

Subpart A—General

§ 587.1 Scope.

This part describes deformable impact barriers that are to be used for testing compliance of motor vehicles with motor vehicle safety standards.

[65 FR 17198, Mar. 31, 2000]

§ 587.2 Purpose.

The design and performance criteria specified in this part are intended to describe measuring tools with sufficient precision to give repetitive and correlative results under similar test conditions and to reflect adequately the protective performance of a motor vehicle or item of motor vehicle equipment with respect to human occupants

§ 587.3 Application.

This part does not in itself impose duties or liabilities on any person. It is a description of tools that are used in compliance tests to measure the performance of occupant protection systems required by the safety standards that refer to these tools. It is designed to be referenced by, and become part of, the test procedures specified in motor vehicle safety standards such as Standard No. 208, *Occupant Crash Protection*, and Standard No. 214, *Side Impact Protection*.

[65 FR 17199, Mar. 31, 2000]

Subpart B—Side Impact Moving Deformable Barrier

§ 587.4 Definitions.

All terms defined in section 102 of the National Traffic and Motor Vehicle Safety Act (15 U.S.C. 1391) are used in their statutory meaning.

§ 587.5 Incorporated materials.

(a) The drawings and specifications referred to in this regulation that are not set forth in full are hereby incorporated in this part by reference. These materials are thereby made part of this regulation. The Director of the Federal Register has approved the materials incorporated by reference. For materials subject to change, only the specific version approved by the Director of the Federal Register and specified in the regulation are incorporated. A notice of any change will be published in the FEDERAL REGISTER. As a convenience to the reader, the materials incorporated by reference are listed in the Finding Aid Table found at the end of this volume of the Code of Federal Regulations.

(b) The drawings and specifications incorporated in this part by reference are available for examination in the general reference section of Docket 79–04, Docket Section, National Highway Traffic Safety Administration, Room

5109, 400 Seventh Street, SW., Washington, DC 20590. Copies may be obtained from Rowley-Scher Reprographics, Inc., 1111 14th Street, NW., Washington, DC 20005, telephone (202) 628–6667 or (202) 408–8789. The drawings and specifications are also on file in the reference library of the Office of the Federal Register, National Archives and Records Administration, Washington, DC.

§ 587.6 General description.

(a) The moving deformable barrier consists of component parts and component assemblies which are described in drawings and specifications that are set forth in this § 587.6 of this chapter (incorporated by reference; see § 587.5).

(b) The moving deformable barrier specifications are provided in the drawings shown in DSL–1278 through DSL–1287, except DSL–1282, and the drawing shown in DSL–1290 (DSL–1278 through DSL–1287, except for DSL–1282, and DSL–1290 are incorporated by reference; see § 587.5).

(1) The specifications for the final assembly of the moving deformable barrier are provided in the drawings shown in DSL–1278, dated June 2002.

(2) The specifications for the frame assembly of the moving deformable barrier are provided in the drawings shown in DSL–1281, dated August 20, 1980.

(3) The specifications for the face of the moving deformable barrier are provided in the drawings shown in DSL–1285, dated October 1991, and DSL–1286, dated August 20, 1980.

(4) The specifications for the ballast installation and details concerning the ballast plate are provided in drawings shown in DSL–1279 and DSL–1280, both dated August 20, 1980.

(5) The specifications for the hub assembly and details concerning the brake are provided in drawings shown in DSL–1283, dated October 1991.

(6) The specifications for the rear guide assembly are provided in drawings shown in DSL–1284, dated August 20, 1980.

(7) The specifications for the research axle assembly are provided in drawings shown in DSL–1287, dated October 1991.

(8) The specifications for the compliance axle assembly are provided in drawings shown in DSL–1290, dated October 1991.

(c) In configuration 2 (with two cameras and camera mounts, a light trap vane, and ballast reduced), the moving deformable barrier (crabbable axle), including the impact surface, supporting structure, and carriage, weighs 3,015 pounds, has a track width of 74 inches, and has a wheelbase of 102 inches.

(d) In configuration 2, the moving deformable barrier has the following center of gravity:

X=44.2 inches rear of front axle
Y=0.3 inches left of longitudinal center line
Z=19.7 inches from ground.

(e) The moving deformable barrier has the following moment of inertia:

Pitch=1669 ft-lb-sec^2
Roll=375 ft-lb-sec^2
Yaw=1897 ft-lb-sec^2

[55 FR 45779, Oct. 30, 1990; 56 FR 47011, Sept. 17, 1991, as amended at 57 FR 7558, Mar. 3, 1992; 68 FR 44472, July 29, 2003]

§§ 587.7–587.10 [Reserved]

Subpart C—Offset Deformable Barrier

SOURCE: 65 FR 17199, Mar. 31, 2000, unless otherwise noted.

§ 587.11 [Reserved]

§ 587.12 Incorporation by reference.

Society of Automotive Engineers (SAE) Recommended Practice J211/1 Rev. MAR 95, Instrumentation for Impact Tests-Part 1—Electronic Instrumentation, is incorporated by reference in § 587.15 in accordance with 5 U.S.C. 552(a) and 1 CFR part 51. A copy may be obtained from SAE at Society of Automotive Engineers, Inc., 400 Commonwealth Drive, Warrendale, PA 15096. A copy of the material may be inspected at NHTSA's Docket Section, 400 Seventh Street, S.W., room 5109, Washington, DC, or at the National Archives and Records Administration (NARA). For information on the availability of this material at NARA, call 202–741–6030, or go to: *http://www.archives.gov/federal_register/code_of_federal_regulations/ibr_locations.html.*

§ 587.13 General description.

The offset deformable barrier is comprised of two elements: a fixed rigid barrier and a deformable face (Figure 1). The fixed rigid barrier is adequate to not deflect or displace more than 10 mm during the vehicle impact. The deformable face consists of aluminum honeycomb and aluminum covering.

§ 587.14 Deformable face component dimensions and material specifications.

The dimensions of the deformable face are illustrated in Figure 1 of this subpart. The dimensions and materials of the individual components are listed separately below. All dimensions allow a tolerance of ±2.5 mm (0.1 in) unless otherwise specified.

(a) Main honeycomb block.

(1) *Dimensions.* The main honeycomb block has a height of 650 mm (25.6 in) (in the direction of honeycomb ribbon axis), a width of 1,000 mm (39.4 in), and a depth of 450 mm (17.7 in)(in the direction of honeycomb cell axis).

(2) *Material.* The main honeycomb block is constructed of the following material. The honeycomb is manufactured out of aluminum 3003, with a foil thickness of 0.076 mm (0.003 in) ±0.004 mm (0.002 in) a cell size of 19.14 mm (0.75 in), a density of 28.6 kg/m^3 (1.78 lb/ft^3) ±2kg/m^3 (0.25 1b/ft^3), and a crush strength of 0.342 MPa (49.6 psi) + 0% − 10%, measured in accordance with the certification procedure described in § 587.15.

(b) Bumper element honeycomb.

(1) *Dimensions.* The bumper element honeycomb has a height of 330 mm (13 in)(in the direction of honeycomb ribbon axis), a width of 1,000 mm (39.4 in), and a depth of 90 mm (3.5 in) (in the direction of honeycomb cell axis).

(2) *Material.* The bumper element honeycomb is constructed of the following material. The honeycomb is manufactured out of aluminum 3003, with a foil thickness of 0.076 mm (0.003 in) ±0.004 mm (0.0002 in), a cell size of 6.4 mm (0.25 in) ±1 mm (0.040 in), a density of 82.6 kg/m^3 (5.15 lb/ft^3) ±3 kg/m^3 (0.19 lb/ft^3), and a crush strength of 1.711 MPa (248 psi) + 0% −10%, measured in accordance with the certification procedure described in § 587.14.

(c) Backing sheet.

(1) *Dimensions.* The backing sheet has a height of 800 mm (31.5 in), a width of 1,000 mm (39.4 in), and a thickness of 2.0 mm (0.08 in) ±0.1 mm (0.004 in).

(2) *Material.* The backing sheet is manufactured out of aluminum 5251/5052.

(d) Cladding sheet.

(1) *Dimensions.* The cladding sheet of the main honeycomb block has a total length of 1,700 mm (66.9 in), a width of 1,000 mm (39.4 in), and a thickness of 0.81 mm (0.03 in) ±0.07 mm (0.003 in). It is shaped as indicated in Figure 1.

(2) *Material.* The cladding sheet of the main honeycomb block is manufactured out of aluminum 5251/5052.

(e) Bumper element honeycomb facing sheet.

(1) *Dimensions.* The bumper facing sheet has a height of 330 mm (13 in), a width of 1,000 mm (39.4 in), and a thickness of 0.81 mm (0.03 in) ±0.07 mm (0.003 in).

(2) *Material.* The bumper element honeycomb facing sheet is manufactured out of aluminum 5251/5052.

(f) Adhesive. The adhesive used throughout is a two-part polyurethane. (such as Ciba-Geigy XB5090/1 resin with XB5304 hardener, or equivalent).

§ 587.15 Verification of aluminum honeycomb crush strength.

The following procedure is used to ascertain the crush strength of the main honeycomb block and the bumper element honeycomb, as specified in §§ 587.14(a)(2) and 587.14(b)(2).

(a) *Sample locations.* To ensure uniformity of crush strength across the whole of the deformable face, 8 samples are taken from 4 locations evenly spaced across the honeycomb material. Seven of these 8 samples must meet the crush strength requirements when tested in accordance with the following sections. The location of the samples depends on the size of the honeycomb material being tested. Four samples, each measuring 300 mm (11.8 in) × 300 mm (11.8 in) × 25 mm (1 in) thick are cut from the honeycomb material. (See Figure 2 for how to locate these samples on two different sizes of honeycomb material.) Each of these larger samples is cut into samples of the size specified in § 587.15(b). Verification is based on the testing of two samples

from each of the four locations. The other two samples are retained for future verification, if necessary.

(b) *Sample size*. Samples of the following size are used for testing. The length is 150 mm (5.9 in) ±6 mm (0.24 in), the width is 150 mm (5.9 in) ±6 mm (0.24 in), and the thickness is 25 mm (1 in) ±2 mm (0.08 in). The walls of incomplete cells around the edge of the sample are trimmed as follows (See Figure 3). In the width (''W'') direction, the fringes (''f'') are no greater than 1.8 mm (0.07 in); in the length (''L'') direction, the fringes (''e'') are at least half the length of one bonded cell wall (''d'') (in the ribbon direction).

(c) *Area measurement*. The length of the sample is measured in three locations, 12.7 mm (0.5 in) from each end and in the middle, and recorded as L1, L2, and L3 (Figure 3). In the same manner, the width is measured and recorded as W1, W2, and W3 (Figure 3). These measurements are taken on the centerline of the thickness. The crush area is then calculated as:

$$A = \frac{(L1 + L2 + L3)}{3} X \frac{(W1 + W2 + W3)}{3}$$

(d) *Crush rate and distance*. The sample is crushed at a rate of not less than 5.1 mm/min (0.2 in/ min) and not more than 7.6 mm/min (0.29 in/min). The minimum crush distance is 16.5 mm (0.65 in). Force versus deflection data are collected in either analog or digital form for each sample tested. If analog data are collected, a means of converting the data to digital data must be made available. All digital data are collected at a rate consistent with SAE Recommended Practice J211/1 Rev. MAR 95 (see § 587.12).

(e) *Crush strength determination*. Ignore all data prior to 6.4 mm (0.25 in) of crush and after 16.5 mm (0.65 in) of crush. Divide the remaining data into three sections or displacement intervals (n = 1, 2, 3) (see Figure 4) as follows. Interval one is from 6.4–9.7 mm (0.25–0.38 in) deflection, inclusive. Interval two is from 9.7–13.2 mm (0.38–0.52 in) deflection, exclusive. Interval three is from 13.2–16.5 mm (0.52–0.65 in) deflection, inclusive. Find the average for each section as follows:

$$F(n) = \frac{[F(n)1 + ... + F(n)m]}{m}; n = 1,2,3$$

where m represents the number of data points measured in each of the three intervals. Calculate the crush strength of each section as follows:

$$S(n) = \frac{F(n)}{A}; n = 1,2,3$$

(f) *Sample crush strength specification*. For a honeycomb sample to meet crush strength requirements, the following condition must be met. For the 0.342 MPa (49.6 psi) material, the strength must be equal to or greater than 0.308 MPa (45 psi) but less than or equal to 0.342 MPa (49.6 psi) for all three compression intervals. For the 1.711 MPa (248 psi) material the strength must be equal to or greater than 1.540 MPa (223 psi) but less than or equal to 1.711 MPa (248 psi) for all three compression intervals.

(g) *Testing hardware*. (1) The hardware used to verify crush strength is capable of applying a load of 13.3 kN (3,000 lb), over at least a 16.5 mm (0.65 in) stroke. The crush rate is constant and known. To ensure that the load is applied to the entire sample, the top and bottom crush plates are no smaller than 165 mm by 165 mm (6.5 in × 6.5 in). The engaging surfaces of the crush plates have a roughness approximately equivalent to 60 grit sandpaper. The bottom crush plate is marked to ensure that the applied load is centered on the sample.

(2) The crush plate assemblies have an average angular rigidity (about axes normal to the direction of crush) of at least 1017 Nm/deg (750 ft-lb/deg), over the range of 0 to 203 Nm (0 to 150 ft-lb) applied torque.

§ 587.16 Adhesive bonding procedure.

Immediately before bonding, aluminum sheet surfaces to be bonded are thoroughly cleaned using a suitable solvent, such as 1-1-1 Trichloroethane. This is carried out at least twice and more often if required to eliminate grease or dirt deposits. The cleaned surfaces are abraded using 120 grit abrasive paper. Metallic/silicon carbide abrasive paper is not to be used. The surfaces are thoroughly abraded and

the abrasive paper changed regularly during the process to avoid clogging, which could lead to a polishing effect. Following abrading, the surfaces are thoroughly cleaned again, as above. In total, the surfaces are solvent-cleaned at least four times. All dust and deposits left as a result of the abrading process are removed, as these can adversely affect bonding. The adhesive is applied to one surface only, using a ribbed rubber roller. In cases where honeycomb is to be bonded to aluminum sheet, the adhesive is applied to the aluminum sheet only. A maximum pressure of 0.5 kg/m^2 (11.9 lb/ft^2) is applied evenly over the surface, giving a maximum film thickness of 0.5 mm (0.02 in).

§ 587.17 Construction.

(a) The main honeycomb block is bonded to the backing sheet with adhesive such that the cell axes are perpendicular to the sheet. The cladding sheet is adhesively bonded to the front surface of the main honeycomb block. The top and bottom surfaces of the cladding sheet are not bonded to the main honeycomb block but are positioned close to it. The cladding sheet is adhesively bonded to the backing sheet at the mounting flanges. The bumper element honeycomb is adhesively bonded to the front of the cladding sheet such that the cell axes are perpendicular to the sheet. The bottom of the bumper element honeycomb is flush with the bottom surface of the cladding sheet. The bumper facing sheet is adhesively bonded to the front of the bumper element honeycomb.

(b) The bumper element honeycomb is divided into three equal sections by means of two horizontal slots. These slots are cut through the entire depth of the bumper element and extend the whole width of the bumper. The slots are cut using a saw; their width is the width of the blade used which do not exceed 4.0 mm (0.16 in).

(c) Clearance holes for mounting the deformable face are drilled in the cladding sheet mounting flanges (shown in Figure 5). The holes are 20 mm (0.79 in) in diameter. Five holes are drilled in the top flange at a distance of 40 mm (1.57 in) from the top edge of the flange and five holes in the bottom flange at a distance of 40 mm (1.6 in) from the bottom edge of the flange. The holes are spaced at 100 mm (3.9 in), 300 mm (11.8 in), 500 mm (19.7 in), 700 mm (27.5 in), 900 mm (35.4 in) horizontally, from either edge of the barrier. All holes are drilled within ±1 mm (0.04 in) of the nominal distances.

§ 587.18 Dimensions of fixed rigid barrier.

(a) The fixed rigid barrier has a mass of not less than 7×10^4 kg (154,324 lb).

(b) The height of the fixed rigid barrier is at least as high as the highest point on the vehicle at the intersection of the vertical transverse plane tangent to the forwardmost point of both front tires, when the tires are parallel to the longitudinal centerline of the vehicle, and the vertical plane through the longitudinal centerline of the vehicle.

§ 587.19 Mounting.

(a) The deformable face is rigidly attached to the edge of the fixed rigid barrier or to some rigid structure attached thereto. The front of the fixed rigid barrier to which the deformable face is attached is flat (continuous over the height and width of the face and vertical ±1 degree and perpendicular ±1 degree to the axis of the run-up track). The edge of the deformable face is aligned with the edge of the fixed rigid barrier appropriate for the side of the vehicle to be tested.

(b) The deformable face is attached to the fixed rigid barrier by means of ten bolts, five in the top mounting flange and five in the bottom, such that the bottom of the bumper element honeycomb is 200 mm (7.8 in) ±15 mm (0.6 in) from the ground. These bolts are at least 8 mm (0.3 in) in diameter. Steel clamping strips are used for both the top and bottom mounting flanges (Figure 1). These strips are 60 mm (2.4 in) high and 1000 mm (39.4 in) wide and have thickness of at least 3 mm (0.12 in). Five clearance holes of 20 mm (0.8 in) diameter are drilled in both strips to correspond with those in the mounting flange on the deformable face cladding sheet (see § 586.17(c)).

FIGURES TO SUBPART C OF PART 587

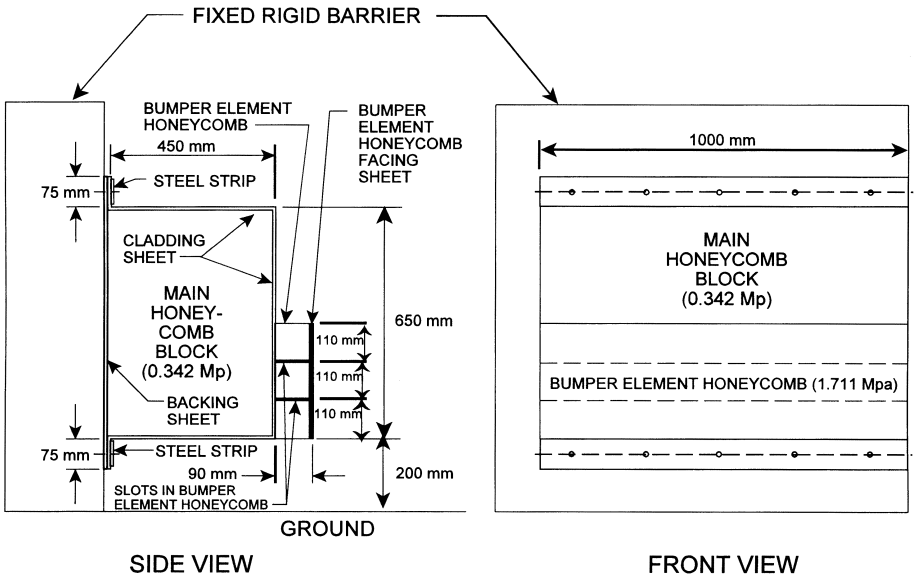

FIGURE 1
OFFSET BARRIER

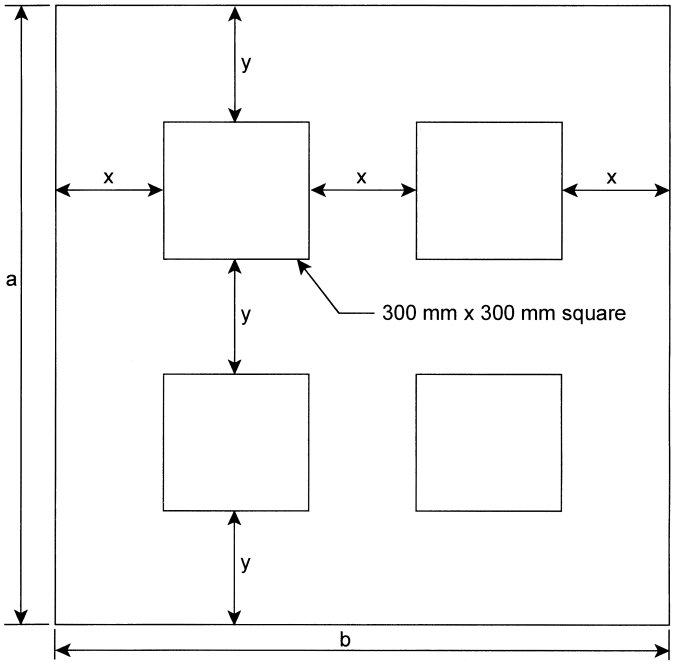

If a ≥ 900 mm: x = 1/3 (b - 600) mm and y = 1/3 (a - 600) mm (for a < b)

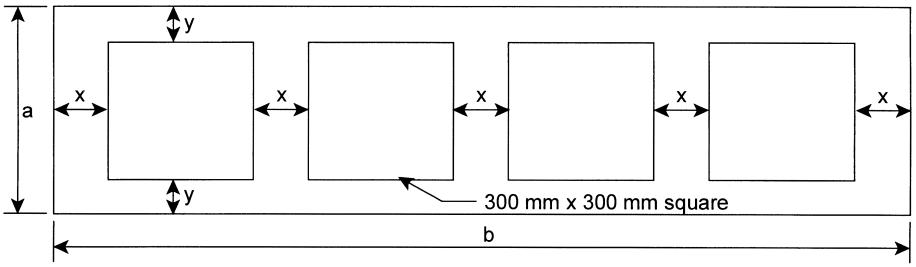

If a < 900 mm: x = 1/5 (b - 1200) mm and y = 1/2 (a - 300) mm (for a ≤ b)

FIGURE 2

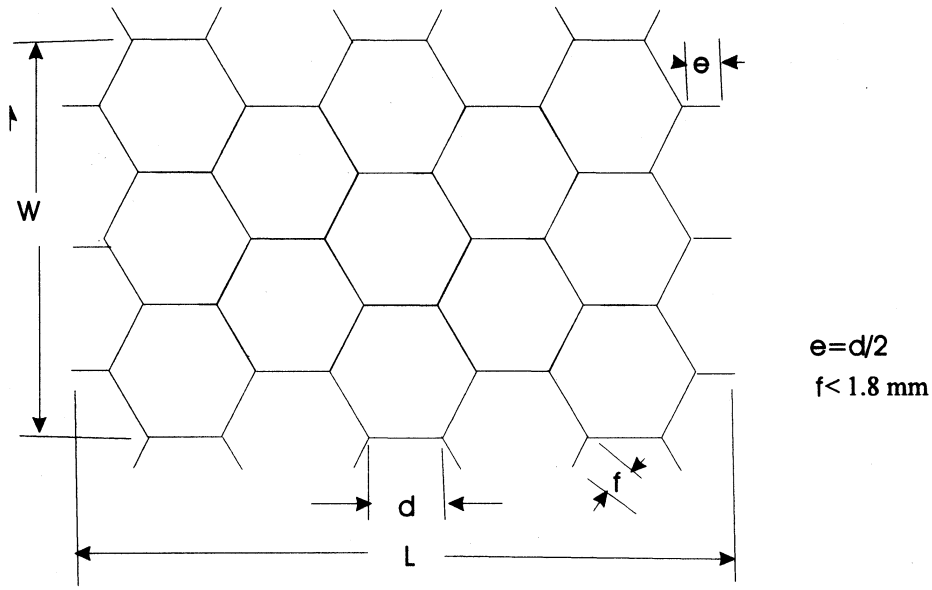

Figure 3
Honeycomb Axes and Measured Dimensions

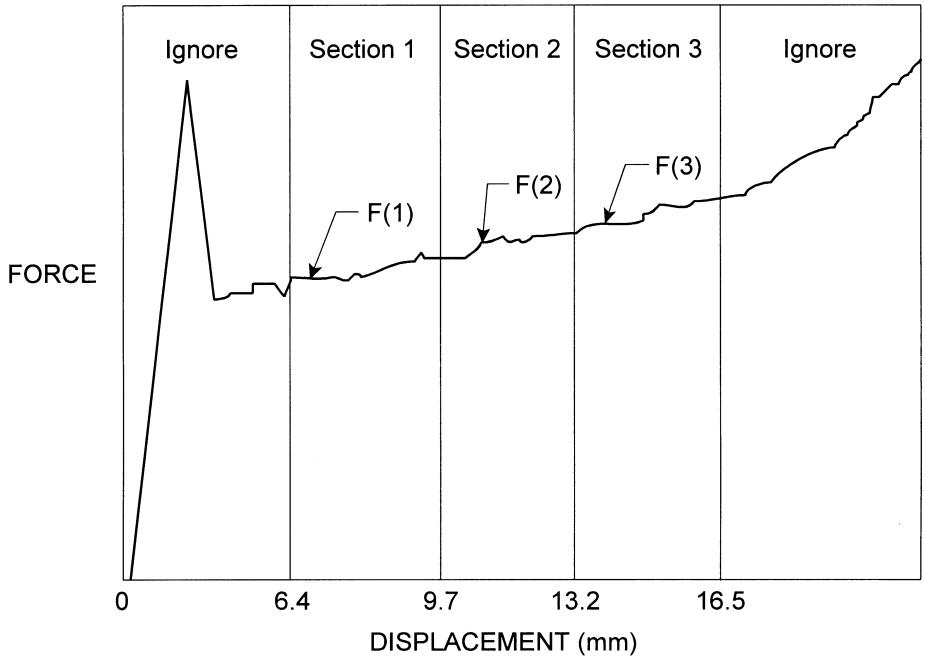

FIGURE 4
CRUSH FORCE AND DISPLACEMENT

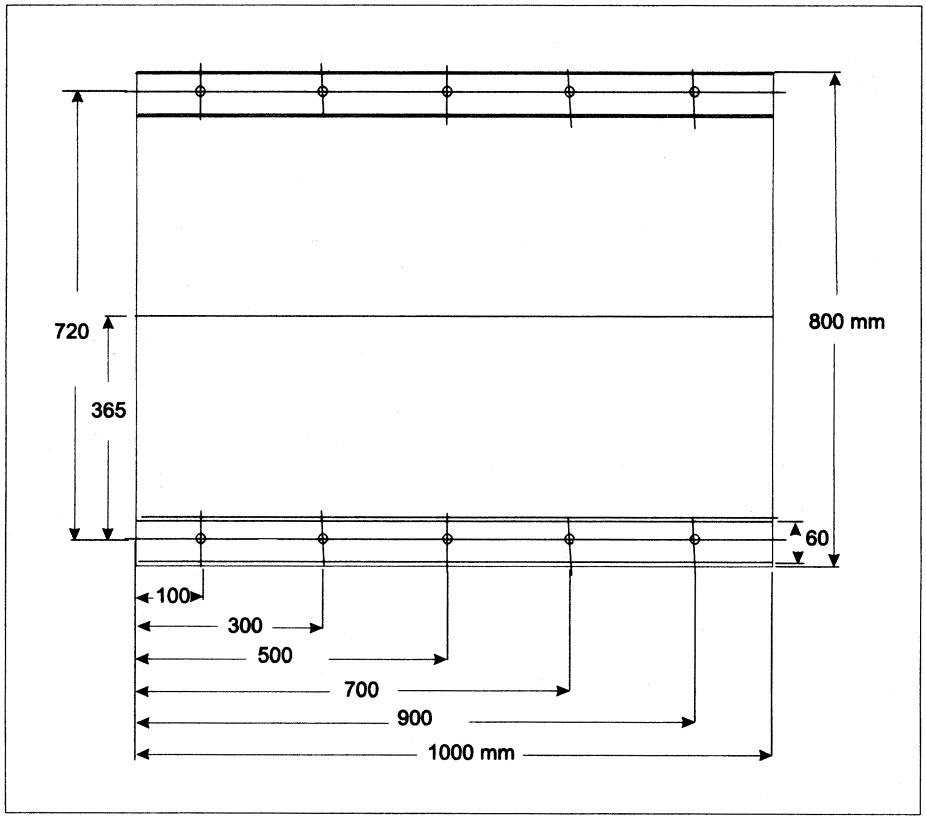

Figure 5
Positions of Holes for Deformable Face Mounting

PART 588—CHILD RESTRAINT SYSTEMS RECORDKEEPING REQUIREMENTS

Sec.
588.1 Scope.
588.2 Purpose.
588.3 Applicability.
588.4 Definitions.
588.5 Records.
588.6 Record retention.

AUTHORITY: 49 U.S.C. 322, 30111, 30115, 30117, and 30166; delegation of authority at 49 CFR 1.50.

SOURCE: 57 FR 41438, Sept. 10, 1992, unless otherwise noted.

§ 588.1 Scope.

This part establishes requirements for manufacturers of child restraint systems to maintain lists of the names and addresses of child restraint owners.

§ 588.2 Purpose.

The purpose of this part is to aid manufacturers in contacting the owners of child restraints during notification campaigns conducted in accordance with 49 CFR part 577, and to aid the National Highway Traffic Safety Administration in determining whether a manufacturer has met its recall responsibilities.

§588.3 Applicability.

This part applies to manufacturers of child restraint systems, except factory-installed built-in restraints.

§588.4 Definitions.

(a) *Statutory definitions.* All terms defined in section 102 of the National Traffic and Motor Vehicle Safety Act (15 U.S.C. 1391) are used in their statutory meaning.

(b) *Motor Vehicle Safety Standard definitions.* Unless otherwise indicated, all terms used in this part that are defined in the Motor Vehicle Safety Standards, part 571 of this subchapter (hereinafter ''the Standards''), are used as defined in the Standards.

(c) *Definitions used in this part.*

Child restraint system is used as defined in S4 of 49 CFR 571.213, *Child Restraint Systems.*

Factory-installed built-in child restraint system is used as defined in S4 of 49 CFR 571.213.

Owners include purchasers.

Registration form means the form provided with a child restraint system in compliance with the requirements of 49 CFR 571.213, and any communication from an owner of a child restraint to the manufacturer that provides the restraint's model name or number and the owner's name and mailing address.

§588.5 Records.

Each manufacturer, or manufacturer's designee, shall record and maintain records of the owners of child restraint systems who have submitted a registration form. The record shall be in a form suitable for inspection such as computer information storage devices or card files, and shall include the names, mailing addresses, and if collected, se-mail addresses of the owners, and the model name or number and date of manufacture (month, year) of the owner's child restraint systems.

[70 FR 53579, Sept. 9, 2005]

§588.6 Record retention.

Each manufacturer, or manufacturer's designee, shall maintain the information specified in §588.5 of this part for a registered restraint system for a period of not less than six years from the date of manufacture of that restraint system.

PARTS 589–590 [RESERVED]

PART 591—IMPORTATION OF VEHICLES AND EQUIPMENT SUBJECT TO FEDERAL SAFETY, BUMPER AND THEFT PREVENTION STANDARDS

Sec.

591.1 Scope.
591.2 Purpose.
591.3 Applicability.
591.4 Definitions.
591.5 Declarations required for importation.
591.6 Documents accompanying declarations.
591.7 Restrictions on importations.
591.8 Conformance bond and conditions.
591.9 Petitions for remission or mitigation of forfeiture.
591.10 Offer of cash deposits or obligations of the United States in lieu of sureties on bonds.

APPENDIX A TO PART 591—SECTION 591.5(f) BOND FOR THE ENTRY OF A SINGLE VEHICLE
APPENDIX B TO PART 591—SECTION 591.5(f) BOND FOR THE ENTRY OF MORE THAN A SINGLE VEHICLE
APPENDIX C TO PART 591—POWER OF ATTORNEY AND AGREEMENT

AUTHORITY: Pub. L. 100–562, 49 U.S.C. 322(a), 30117, 30141–30147; delegation of authority at 49 CFR 1.50.

SOURCE: 54 FR 40078, Sept. 29, 1989, unless otherwise noted.

§591.1 Scope.

This part establishes procedures governing the importation of motor vehicles and motor vehicle equipment subject to the Federal motor vehicle safety, bumper, and theft prevention standards.

[55 FR 11378, Mar. 28, 1990]

§591.2 Purpose.

The purpose of this part is to ensure that motor vehicles and motor vehicle equipment permanently imported into the United States conform with theft prevention standards issued under part 541 of this chapter and that they conform with, or are brought into conformity with, all applicable Federal motor vehicle safety standards issued under part 571 of this chapter and

bumper standards issued under part 581 of this chapter. The purpose of this part is also to ensure that nonconforming vehicles and equipment items imported on a temporary basis are ultimately either exported or abandoned to the United States.

[55 FR 11378, Mar. 28, 1990]

§ 591.3 Applicability.

This part applies to any person offering a motor vehicle or item of motor vehicle equipment for importation into the United States.

[55 FR 11378, Mar. 28, 1990]

§ 591.4 Definitions.

All terms used in this part that are defined in 49 U.S.C. 30102, 32101, 32301, 32502, and 33101 are used as defined in those sections except that the term ''model year'' is used as defined in part 593 of this chapter.

Administrator means the Administrator of NHTSA.

NHTSA means the National Highway Traffic Safety Administration of the Department of Transportation.

Dutiable value means entered value, as determined by the Secretary of the Treasury.

Original manufacturer means the entity responsible for the original manufacture or assembly of a motor vehicle, and does not include any person (other than such entity) who converts the motor vehicle after its manufacture to conformance with the Federal motor vehicle safety standards.

Reconstructed motor vehicle means a motor vehicle whose body is less than 25 years old and which is mounted on a chassis or frame that is not its original chassis or frame and that is less than 25 years old.

Salvage motor vehicle means a motor vehicle, whether or not repaired, which has been:

(1) Wrecked, destroyed, or damaged, to the extent that the total estimated or actual cost of parts and labor to rebuild or reconstruct the motor vehicle to its pre-accident condition and for legal operation on the streets, roads, or highways, exceeds 75 percent of its retail value at the time it was wrecked, destroyed, or damaged; or

(2) Wrecked, destroyed, or damaged, to which an insurance company acquires ownership pursuant to a damage settlement (other than a damage settlement in connection with a recovered theft vehicle unless such motor vehicle sustained sufficient damage to meet the 75 percent threshold specified in the first sentence); or

(3) Voluntarily designated as such by its owner, without regard to the extent of the motor vehicle's damage and repairs.

[54 FR 40078, Sept. 29, 1989, as amended at 55 FR 3747, Feb. 5, 1990; 55 FR 11378, Mar. 28, 1990; 59 FR 52097, Oct. 14, 1994; 60 FR 57954, Nov. 24, 1995; 69 FR 52092, Aug. 24, 2004]

§ 591.5 Declarations required for importation.

No person shall import a motor vehicle or item of motor vehicle equipment into the United States unless, at the time it is offered for importation, its importer files a declaration, in duplicate, which declares one of the following:

(a)(1) The vehicle was not manufactured primarily for use on the public roads and thus is not a motor vehicle subject to the Federal motor vehicle safety, bumper, and theft prevention standards; or

(2) The equipment item is not a system, part, or component of a motor vehicle and thus is not an item of motor vehicle equipment subject to the Federal motor vehicle safety, bumper, and theft prevention standards.

(b) The vehicle or equipment item conforms with all applicable safety standards (or the vehicle does not conform solely because readily attachable equipment items which will be attached to it before it is offered for sale to the first purchases for purposes other than resale are not attached), and bumper and theft prevention standards, and bears a certification label or tag to that effect permanently affixed by the original manufacturer to the vehicle, or by the manufacturer to the equipment item or its delivery container, in accordance with, as applicable, parts 541, 555, 567, 568, and 581, or 571 (for certain equipment items) of this chapter.

(c) The vehicle or equipment item does not comply with all applicable

Federal motor vehicle safety, bumper, and theft prevention standards, but is intended solely for export, and the vehicle or equipment item, and the outside of the container of the equipment item, if any, bears a label or tag to that effect.

(d) The vehicle does not conform with all applicable Federal motor vehicle safety, bumper, and theft prevention standards, but the importer is eligible to import it because:

(1) (S)he is a nonresident of the United States and the vehicle is registered in a country other than the United States,

(2) (S)he is temporarily importing the vehicle for personal use for a period not to exceed one year, and will not sell it during that time,

(3) (S)he will export it not later than the end of one year after entry, and

(4) The declaration contains the importer's passport number and country of issue.

(e) The vehicle or equipment item requires further manufacturing operations to perform its intended function, other than the addition of readily attachable equipment items such as mirrors, wipers, or tire and rim assemblies, or minor finishing operations such as painting, and any part of such vehicle that is required to be marked by part 541 of this chapter is marked in accordance with that part.

(f) The vehicle does not conform with all applicable Federal motor vehicle safety and bumper standards (but does conform with all applicable Federal theft prevention standards), but the importer is eligible to import it because:

(1) The importer has furnished a bond in an amount equal to 150% of the dutiable value of the vehicle, containing the terms and conditions specified in section 591.8; and

(2)(i) The importer has registered with NHTSA pursuant to part 592 of this chapter, and such registration has not been revoked or suspended, and the Administrator has determined pursuant to part 593 of this chapter that the model and model year of the vehicle to be imported is eligible for importation into the United States; or

(ii) The importer has executed a contract or other agreement with an importer who has registered with NHTSA pursuant to part 592 of this chapter and whose registration has not been suspended or revoked; and the Administrator has determined pursuant to part 593 of this chapter that the model and model year of the vehicle to be imported is eligible for importation into the United States; and

(3) The vehicle is not a salvage motor vehicle or a reconstructed motor vehicle.

(g) (For importations for personal use only) The vehicle was certified by its original manufacturer as complying with all applicable Canadian motor vehicle safety standards and its original manufacturer has informed NHTSA that it complies with all applicable Federal motor vehicle safety, bumper, and theft prevention standards, or that it complies with all such standards except for the labeling requirements of Federal Motor Vehicle Safety Standards Nos. 101 and 110 or 120, and/or the specifications of Federal Motor Vehicle Safety Standard No. 108 relating to daytime running lamps. The vehicle is not a salvage motor vehicle, a repaired salvage motor vehicle, or a reconstructed motor vehicle.

(h) The vehicle does not conform with all applicable Federal motor vehicle safety, bumper, and theft prevention standards, but the importer is eligible to import it because (s)he:

(1)(i) Is a member of the personnel of a foreign government on assignment in the United States, or a member of the Secretariat of a public international organization so designated under the International Organization Immunities Act, and within the class of persons for whom free entry of motor vehicles has been authorized by the Department of State;

(ii) Is importing the motor vehicle on a temporary basis for the personal use of the importer, and will register it through the Office of Foreign Missions of the Department of State;

(iii) Will not sell the vehicle to any person in the United States, other than a person eligible to import a vehicle under this paragraph; and

(iv) Will obtain from the Office of Foreign Missions of the Department of State, before departing the United States at the conclusion of a tour of

duty, an ownership title to the vehicle good for export only; or

(2)(i) Is a member of the armed forces of a foreign country on assignment in the United States;

(ii) Is importing the vehicle on a temporary basis, and for the personal use of the importer;

(iii) Will not sell the vehicle to any person in the United States, other than to a person eligible to import a vehicle under this subsection; and

(iv) Will export the vehicle upon departing the United States at the conclusion of a tour of duty.

(i)(1) The vehicle is 25 or more years old.

(2) The equipment item was manufactured on a date when no applicable safety or theft prevention standard was in effect.

(j)(1) The vehicle or equipment item does not conform with all applicable Federal motor vehicle safety and bumper standards, but is being imported solely for the purpose of:

(i) Research;

(ii) Investigations;

(iii) Show or display;

(iv) Demonstrations or training; or

(v) Competitive racing events;

(2)(i) The importer has received written permission from NHTSA; or

(ii) The importer is an original manufacturer of motor vehicles (or a wholly owned subsidiary thereof) that are certified to comply with all applicable Federal motor vehicle safety standards; and

(3) The importer will provide the Administrator with documentary proof of export or destruction not later than 30 days following the end of the period for which the vehicle has been admitted into the United States.

(k) The equipment item is subject to the theft prevention standard, and is marked in accordance with the requirements of part 541 of this chapter.

[54 FR 40078, Sept. 29, 1989, as amended at 55 FR 3747, Feb. 5, 1990; 55 FR 11378, Mar. 28, 1990; 55 FR 17439, Apr. 25, 1990; 57 FR 2047, Jan. 17, 1992; 57 FR 44703, Sept. 29, 1992; 59 FR 31560, June 20, 1994; 64 FR 37882, July 14, 1999; 69 FR 52092, Aug. 24, 2004]

§ 591.6 Documents accompanying declarations.

Declarations of eligibility for importation made pursuant to § 591.5 must be accompanied by the following certification and documents, where applicable.

(a) A declaration made pursuant to § 591.5(a) shall be accompanied by a statement substantiating that the vehicle was not manufactured for use on the public roads, or that the equipment item was not manufactured for use on a motor vehicle or is not an item of motor vehicle equipment.

(b) A declaration made pursuant to § 591.5(e) shall be accompanied by:

(1) (For a motor vehicle) a document meeting the requirements of § 568.4 of part 568 of this chapter.

(2) (For an item of motor vehicle equipment) a written statement issued by the manufacturer of the equipment item which states the applicable Federal motor vehicle safety standard(s) with which the equipment item is not in compliance, and which describes the further manufacturing required for the equipment item to perform its intended function.

(c) A declaration made pursuant to paragraph (f) of § 591.5, and under a bond for the entry of a single vehicle, shall be accompanied by a bond in the form shown in appendix A to this part, in an amount equal to 150% of the dutiable value of the vehicle, or, if under bond for the entry of more than one vehicle, shall be accompanied by a bond in the form shown in appendix B to this part and by Customs Form CF 7501, for the conformance of the vehicle(s) with all applicable Federal motor vehicle safety and bumper standards, or, if conformance is not achieved, for the delivery of such vehicles to the Secretary of Homeland Security for export at no cost to the United Sates, or for its abandonment.

(d) A declaration made pursuant to § 591.5(f) by an importer who is not a Registered Importer shall be accompanied by a copy of the contract or other agreement that the importer has with a Registered Importer to bring the vehicle into conformance with all applicable Federal motor vehicle safety standards.

(e) A declaration made pursuant to §591.5(h) shall be accompanied by a copy of the importer's official orders, or, if a qualifying member of the personnel of a foreign government on assignment in the United States, the name of the embassy to which the importer is accredited.

(f) A declaration made pursuant to §591.5(j) shall be accompanied by the following documentation:

(1) A declaration made pursuant to §591.5(j)(1)(i), (ii), (iv), or (v) and (j)(2)(i) shall be accompanied by a letter from the Administrator authorizing importation pursuant to §591.5(j)(1)(i), (ii), (iv), or (v) and (j)(2)(i). Any person seeking to import a motor vehicle or motor vehicle equipment pursuant to these sections shall submit, in advance of such importation, a written request to the Administrator containing a full and complete statement identifying the vehicle or equipment, its make, model, model year or date of manufacture, VIN if a motor vehicle, and the specific purpose(s) of importation. The discussion of purpose(s) shall include a description of the use to be made of the vehicle or equipment. If use on the public roads is an integral part of the purpose for which the vehicle or equipment is imported, the statement shall request permission for use on the public roads, describing the purpose which makes such use necessary, and stating the estimated period of time during which use of the vehicle or equipment on the public roads is necessary. The request shall also state the intended means of final disposition, and disposition date, of the vehicle or equipment after completion of the purposes for which it is imported. The request shall be addressed to Director, Office of Vehicle Safety Compliance (NSA–32), National Highway Traffic Safety Administration, Room 6111, 400 Seventh Street, SW, Washington, DC 20590.

(2) A declaration made pursuant to §591.5(j)(1)(iii) and (j)(2)(i) shall be accompanied by a letter from the Administrator authorizing importation pursuant to §591.5(j)(1)(iii) and (j)(2)(i). Any person seeking to import a motor vehicle or motor vehicle equipment pursuant to those sections shall submit, in advance of such importation, a written request to the Administrator containing a full and complete statement identifying the equipment item or the vehicle and its make, model, model year or date of manufacture, VIN, and mileage at the time the request is made. The importer's written request to the Administrator shall explain why the vehicle or equipment item is of historical or technological interest. The importer shall also provide a statement that, until the vehicle is not less than 25 years old, (s)he shall not sell, or transfer possession of, or title to, the vehicle, and shall not license it for use, or operate it on the public roads, except under such terms and conditions as the Administrator may authorize. If the importer wishes to operate the vehicle on the public roads, the request to the Administrator shall include a description of the purposes for which (s)he wishes to use it on the public roads, a copy of an insurance policy or a contract to acquire an insurance policy, which contains as a condition thereof that the vehicle will not accumulate mileage of more than 2,500 miles in any 12-month period and a statement that the importer shall maintain such policy in effect until the vehicle is not less than 25 years old, a statement that the importer will allow the Administrator to inspect the vehicle at any time after its importation to verify that the accumulated mileage of the vehicle is not more than 2,500 miles in any 12-month period, and a statement that the vehicle will not be used on the public roads unless it is in compliance with the regulations of the Environmental Protection Agency.

(3) A declaration made pursuant to §591.5(j)(2)(ii) shall be accompanied by the written statement of its importer describing the use to be made of the vehicle or equipment item. If use on the public roads is an integral part of the purpose for which the vehicle or equipment item is imported, the statement shall describe the purpose which makes such use necessary, state the estimated period of time during which use of the vehicle or equipment item on the public roads is necessary, and state the intended means of final disposition (and disposition date) of the vehicle or

equipment item after completion of the purpose for which it is imported.

[54 FR 40078, Sept. 29, 1989, as amended at 55 FR 3747, Feb. 5, 1990; 55 FR 6994, Feb. 28, 1990; 55 FR 11379, Mar. 28, 1990; 57 FR 2047, Jan. 17, 1992; 57 FR 29043, June 30, 1992; 58 FR 12908, Mar. 8, 1993; 59 FR 52097, Oct. 14, 1994; 60 FR 57954, Nov. 24, 1995; 64 FR 37883, July 14, 1999; 69 FR 52092, Aug. 24, 2004]

§ 591.7 Restrictions on importations.

(a) A vehicle or equipment item which has entered the United States under a declaration made pursuant to § 591.5(j), and for which a Temporary Importation Bond has been provided to the Secretary of the Treasury, shall not remain in the United States for a period that exceeds 3 years from its date of entry.

(b) If the importer of a vehicle or equipment item under § 591.5(j) does not intend to export or destroy the vehicle or equipment item not later than 3 years after the date of entry, and intends to pay duty to the U.S. Customs Service on such vehicle or equipment item, the importer shall request permission in writing from the Administrator for the vehicle or equipment item to remain in the United States for an additional period of time not to exceed 5 years from the date of entry. Such a request must be received not later than 60 days before the date that is 3 years after the date of entry. Such vehicle or equipment item shall not remain in the United States for a period that exceeds 5 years from the date of entry, unless further written permission has been obtained from the Administrator.

(c) An importer of a vehicle which has entered the United States under a declaration made pursuant to § 591.5(j)(2)(i) shall not sell, or transfer possession of, or title to, the vehicle, and shall not license it for use, or operate it on the public roads, except under such terms and conditions as the Administrator may authorize in writing. An importer of a vehicle which has entered the United States under a declaration made pursuant to § 591.5(j)(2)(ii) shall at all times retain title to it.

(d) Any violation of a term or condition imposed by the Administrator in a letter authorizing importation for on-road use under § 591.5(j), or a change of status under paragraph (e) of this section, including a failure to allow inspection upon request to verify that the accumulated mileage of the vehicle is not more than 2,500 miles in any 12-month period, shall be considered a violation of 49 U.S.C. 30112(a) for which a civil penalty may be imposed. Such a violation will also act to void the authorization and require the exportation of the vehicle. With respect to importations under § 591.6(f)(2) or a change of status to an importation for show or display as provided under paragraph (e) of this section, if the Administrator has reason to believe that a violation has occurred, the Administrator may tentatively conclude that a term of entry has been violated, but shall make no final conclusion until the importer or owner has been afforded an opportunity to present data, views, and arguments as to why there is no violation or why a penalty should not be imposed.

(e) If the importer of a vehicle under § 591.5(f)(2)(ii) has been notified in writing by the Registered Importer with which it has executed a contract or other agreement that the registration of the Registered Importer has been suspended (for other than the first time) or revoked, pursuant to § 592.7 of this chapter, and that it has not affixed a certification label on the vehicle and/or filed a certification of conformance with the Administrator as required by § 592.6 of this chapter, and that it therefore may not release the vehicle for the importer, the importer shall execute a contract or other agreement with another Registered Importer for the certification of the vehicle and submission of the certification of conformance to the Administrator. The Administrator shall toll the 120-day period for submission of a certification to the Administrator pursuant to § 592.6(d) of this chapter during the period from the date of the Registered Importer's notification to the importer until the date of the contract with the substitute Registered Importer.

[54 FR 40078, Sept. 29, 1989, as amended at 55 FR 6994, Feb. 28, 1990; 57 FR 2047, Jan. 17, 1992; 58 FR 12908, Mar. 8, 1993; 59 FR 31560, June 20, 1994; 64 FR 37883, July 14, 1999; 69 FR 52092, Aug. 24, 2004]

§591.8 Conformance bond and conditions.

(a) The bond required under section 591.6(c) for importation of a vehicle not originally manufactured to conform with all applicable standards issued under part 571 and part 581 of this chapter shall cover only one motor vehicle, and shall be in an amount equal to 150% of the dutiable value of the vehicle. However, a registered importer may enter vehicles under a bond of a continuing nature that covers an indefinite number of motor vehicles 150% of whose total dutiable value at any point in time does not exceed $1,000,000.

(b) The principal on the bond shall be the importer of the vehicle.

(c) The surety on the bond shall possess a certificate of authority to underwrite Federal bonds. (See list of certificated sureties at 54 FR 27800, June 30, 1989)

(d) In consideration of the release from the custody of the Bureau of Customs and Border Protection, or the withdrawal from a Customs bonded warehouse into the commerce of, or for consumption in, the United States, of a motor vehicle not originally manufactured to conform to applicable standards issued under part 571 and part 581 of this chapter, the obligors (principal and surety) shall agree to the following conditions of the bond:

(1) To have such vehicle brought into conformity with all applicable standards issued under part 571 and part 581 of this chapter within the number of days after the date of entry that the Administrator has established for such vehicle (to wit, 120 days);

(2) In the case of a vehicle imported pursuant to section 591.5(f), to file (or if not a Registered Importer, to cause the Registered Importer of the vehicle to file) with the Administrator, a certificate that the vehicle complies with each Federal motor vehicle safety and bumper standard in the year that the vehicle was manufactured and which applies in such year to the vehicle; or

(3) In the case of a Registered Importer, not to release custody of the vehicle to any person for license or registration for use on public roads, streets, or highways, or license or register the vehicle from the date of entry until 30 calendar days after it has certified compliance of the vehicle to the Administrator, unless the Administrator has notified the principal before 30 calendar days that (s)he has accepted the certification, and that the vehicle and bond may be released, except that no such release shall be permitted, before or after the 30th calendar day, if the principal has received written notice from the Administrator that an inspection of the vehicle will be required or that there is reason to believe that such certification is false or contains a misrepresentation;

(4) In the case of a Registered Importer, to cause the vehicle to be available for inspection, if the principal has received written notice from the Administrator that an inspection is required.

(5) In the case of a Registered Importer, not to release the vehicle until the Administrator is satisfied with the certification and any modification thereof, if the principal has received written notice from the Administrator that there is reason to believe that the certification is false or contains a misrepresentation.

(6) If the principal has received written notice from the Administrator that the vehicle has been found not to comply with all applicable Federal motor vehicle safety and bumper standards, and written demand that the vehicle be abandoned to the United States, or delivered to the Secretary of Homeland Security for export (at no cost to the United States), or to abandon the vehicle to the United States, or to deliver the vehicle, or cause the vehicle to be delivered to, the custody of the Bureau of Customs and Border Protection at the port of entry listed above, or to any other port of entry, and to secure all documents necessary for exportation of the vehicle from the United States at no cost to the United States, or in default of abandonment or redelivery after prior notice by the Administrator to the principal, to pay to the Administrator the amount of the bond.

(e) If the principal defaults on the obligation of paragraph (d)(6) of this section, to abandon the vehicle to the United States or to redeliver the vehicle to the custody of a District Director of Customs and to execute all documents necessary for its exportation,

the obligors shall pay to the Administrator the amount of the bond given under the provisions of this section.

[55 FR 11379, Mar. 28, 1990, as amended at 59 FR 31560, June 20, 1994; 69 FR 52092, Aug. 24, 2004]

§ 591.9 Petitions for remission or mitigation of forfeiture.

(a) After a bond has been forfeited, a principal and/or a surety may petition for remission of forfeiture. A principal and/or surety may petition for mitigation of forfeiture only if the motor vehicle has been imported pursuant to paragraph 591.5(f) and the condition not met relates to the compliance of a passenger motor vehicle with part 581 of this chapter.

(b) A petition for remission or mitigation shall:

(1) Be addressed to the Administrator, identified as either a petition for remission or for mitigation, submitted in triplicate, and signed by the principal and/or the surety.

(2) State the make, model, model year, and VIN of the vehicle involved, and contain the Customs Entry number under which the vehicle entered the United States.

(3) State the facts and circumstances relied on by the petitioner to justify remission or mitigation.

(4) Be filed within 30 days from the date of the mailing of the notice of forfeiture incurred.

(c) A false statement contained in a petition may subject the petitioner to prosecution under the provisions of 18 U.S.C. 1001.

(d) If the Administrator finds that all conditions of the bond have, in fact, been fulfilled, the forfeiture is remitted.

(e) A decision to mitigate a forfeiture upon condition that a stated amount is paid shall be effective for not more than 60 days from the date of notice to the petitioner of such decision. If payment of the stated amount is not made, or arrangements made for delayed or installment payment, the full claim of forfeiture shall be deemed applicable. The Administrator shall collect the claim, or, if unable to collect the claim within 120 days, shall refer the matter to the Department of Justice.

[55 FR 11380, Mar. 28, 1990, as amended at 59 FR 31560, June 20, 1994]

§ 591.10 Offer of cash deposits or obligations of the United States in lieu of sureties on bonds.

(a) In lieu of sureties on any bond required under § 591.6(c), an importer may offer United States money, United States bonds (except for savings bonds), United States certificates of indebtedness, Treasury notes, or Treasury bills in an amount equal to the amount of the bond.

(b) At the time the importer deposits any obligation of the United States, other than United States money, with the Administrator, (s)he shall deliver a duly executed power of attorney and agreement, in the form shown in appendix C to this part, authorizing the Administrator or delegate of the Administrator, in case of any default in the performance of any of the conditions of the bond, to sell the obligation so deposited, and to apply the proceeds of sale, in whole or in part, to the satisfaction of any penalties for violations of 49 U.S.C. 30112 and 49 U.S.C. 32506 arising by reasons of default.

(c) If the importer deposits money of the United States with the Administrator, the Administrator, or delegate of the Administrator, may apply the cash, in whole or in part, to the satisfaction of any penalties for violations of 49 U.S.C. 30112 and 49 U.S.C. 32506 arising by reason of default.

[58 FR 12908, Mar. 8, 1993, as amended at 59 FR 52097, Oct. 14, 1994]

APPENDIX A TO PART 591—SECTION 591.5(f) BOND FOR THE ENTRY OF A SINGLE VEHICLE

Department of Transportation

National Highway Traffic Safety Administration

BOND TO ENSURE CONFORMANCE WITH FEDERAL MOTOR VEHICLE SAFETY AND BUMPER STANDARDS

(To redeliver vehicle, to produce documents, to perform conditions of release such as to bring vehicle into conformance with all applicable Federal motor vehicle safety and bumper standards)

Know All Men by These Presents That (principal's name, mailing address which includes city, state, ZIP code, and state of incorporation if a corporation), as principal, and (surety's name, mailing address which includes city, state, ZIP code and state of incorporation), as surety, are held and firmly bound unto the UNITED STATES OF AMERICA in the sum of (bond amount in words) dollars ($ (bond amount in numbers)), which represents 150% of the entered value of the following described motor vehicle, as determined by the Bureau of Customs and Border Protection: (make, model, model year, and VIN) for the payment of which we bind ourselves, our heirs, executors, and assigns (jointly and severally), firmly bound by these presents.

WITNESS our hands and seals this_____day of_____, 20____.

WHEREAS, motor vehicles may be entered under the provisions of 49 U.S.C. Chapters 301 and 325; and DOT Form HS–7 ''Declaration;''

WHEREAS, pursuant to 49 CFR part 591, a regulation promulgated under the provisions of 49 U.S.C. Chapter 301, the above-bounden principal desires to import permanently the motor vehicle described above, which is a motor vehicle that was not originally manufactured to conform to the Federal motor vehicle safety or bumper standards; and

WHEREAS, pursuant to 49 CFR part 592, a regulation promulgated under the provisions of 49 U.S.C. Chapter 301, the above-bounden principal has been granted the status of Registered Importer of motor vehicles not originally manufactured to conform to the Federal motor vehicle safety and bumper standards (or, if not a Registered Importer, has a contract with a Registered Importer covering the vehicle described above); and

WHEREAS, pursuant to 49 CFR part 593, a regulation promulgated under 49 U.S.C. Chapter 301, the Administrator of the National Highway Traffic Safety Administration has decided that the motor vehicle described above is eligible for importation into the United States; and

WHEREAS, the motor vehicle described above has been imported at the port of _____, and entered at said port for consumption on entry No._____, dated_____, 20____;

NOW, THEREFORE, THE CONDITION OF THIS OBLIGATION IS SUCH THAT—

(1) The above-bounden principal (the ''principal''), in consideration of the permanent admission into the United States of the motor vehicle described above (the ''vehicle''), voluntarily undertakes and agrees to have such vehicle brought into conformity with all applicable Federal motor vehicle safety and bumper standards within a reasonable time after such importation, as specified by the Administrator of the National Highway Traffic Safety Administration (the ''Administrator'');

(2) The principal shall then file, or if not a Registered Importer, shall then cause the Registered Importer of the vehicle to file, with the Administrator, a certificate that the vehicle complies with each Federal motor vehicle safety standard in the year that the vehicle was manufactured and which applies in such year to the vehicle, and that the vehicle complies with the Federal bumper standard (if applicable);

(3) The principal, if a Registered Importer, shall not release custody of the vehicle to any person for license or registration for use on public roads, streets, or highways, or license or register the vehicle from the date of entry until 30 calendar days after it has certified compliance of the vehicle to the Administrator, unless the Administrator notifies the principal before 30 calendar days that (s)he has accepted such certification and the vehicle and bond may be released, except that no such release shall be permitted, before or after the 30th calendar day, if the principal has received written notice from the Administrator that an inspection of such vehicle will be required, or that there is reason to believe that such certification is false or contains a misrepresentation.

(4) And if the principal has received written notice from the Administrator that an inspection is required, the principal shall cause the vehicle to be available for inspection, and the vehicle and bond shall be promptly released after completion of an inspection showing no failure to comply. However, if the inspection shows a failure to comply, the vehicle and bond shall not be released until such time as the failure to comply ceases to exist;

(5) And if the principal has received written notice from the Administrator that there is reason to believe that the certificate is false or contains a misrepresentation, the vehicle or bond shall not be released until the Administrator is satisfied with the certification and any modification thereof;

(6) And if the principal has received written notice from the Administrator that the vehicle has been found not to comply with all applicable Federal motor vehicle safety and bumper standards, and written demand that the vehicle be abandoned to the United States, or delivered to the Secretary of Homeland Security for export (at no cost to the United States), the principal shall abandon the vehicle to the United States, or shall deliver the vehicle, or cause the vehicle to be delivered to, the custody of the Bureau of Customs and Border Protection at the port of entry listed above, or any other port of entry, and shall execute all documents necessary for exportation of the vehicle from the United States, at no cost to the United

States; or in default of abandonment or redelivery after proper notice by the Administrator to the principal, the principal shall pay to the Administrator the amount of this obligation;

Then this obligation shall be void; otherwise it shall remain in full force and effect.

Signed, sealed, and delivered in the presence of—

_____

Name Address
_____(SEAL)
(Principal)

_____

Name Address

_____

Name Address
_____(SEAL)
(Surety)

_____

Name Address

CERTIFICATE AS TO CORPORATE PRINCIPAL

I, _____ certify that I am the _____ of the corporation named as principal in the within bond; that _____, who signed the bond on behalf of the principal, was then _____ of said corporation; that I know his/her signature, and his/her signature thereto is genuine; and that said bond was duly signed, sealed, and attested for and in behalf of said corporation by authority of its governing body.

_____[Corporate Seal]

To be used when a power of attorney has been filed with NHTSA. May be executed by secretary, assistant secretary, or other officer.

[55 FR 11380, Mar. 28, 1990, as amended at 59 FR 52097, Oct. 14, 1994; 69 FR 52093, Aug. 24, 2004]

APPENDIX B TO PART 591—SECTION 591.5(f) BOND FOR THE ENTRY OF MORE THAN A SINGLE VEHICLE

DEPARTMENT OF TRANSPORTATION

NATIONAL HIGHWAY TRAFFIC SAFETY ADMINISTRATION

BOND TO ENSURE CONFORMANCE WITH FEDERAL MOTOR VEHICLE SAFETY AND BUMPER STANDARDS

(To redeliver vehicles, to produce documents, to perform conditions of release such as to bring vehicles into conformance with all applicable Federal motor vehicle safety and bumper standards)

Know All Men by These Presents That (principal's name, mailing address which includes city, state, ZIP code, and state of incorporation if a corporation), as principal, and (surety's name, mailing address which includes city, state, ZIP code and state of incorporation) as surety, are held and firmly bound unto the UNITED STATES OF AMERICA in the sum of (bond amount in words) dollars ($ (bond amount in numbers)), which represents 150% of the entered value of the following described motor vehicle, as determined by the Bureau of Customs and Border Protection (make, model, model year, and VIN of each vehicle) for the payment of which we bind ourselves, our heirs, executors, and assigns (jointly and severally), firmly bound by these presents.

WITNESS our hands and seals this _____ day of _____, 20____.

WHEREAS, motor vehicles may be entered under the provisions of 49 U.S.C. Chapters 301 and 325; and DOT Form HS–7 ''Declaration,''

WHEREAS, pursuant to 49 CFR part 591, a regulation promulgated under the provisions of 49 U.S.C. Chapter 301, the above-bounden principal desires to import permanently the motor vehicles described above, which are motor vehicles that were not originally manufactured to conform to the Federal motor vehicle safety, or bumper, or theft prevention standards; and

WHEREAS, pursuant to 49 CFR part 592, a regulation promulgated under the provisions of 49 U.S.C. Chapter 301, the above-bounden principal has been granted the status of Registered Importer of motor vehicles not originally manufactured to conform to the Federal motor vehicle safety, bumper, and theft prevention standards; and

WHEREAS, pursuant to 49 CFR part 593, a regulation promulgated under 49 U.S.C. Chapter 301, the Administrator of the National Highway Traffic Safety Administration has decided that each motor vehicle described above is eligible for importation into the United States; and

WHEREAS, the motor vehicles described above have been imported at the port of _____, and entered at said port for consumption on entry No. _____, dated _____ __, 20____;

NOW, THEREFORE, THE CONDITION OF THIS OBLIGATION IS SUCH THAT—

(1) The above-bounden principal (''the principal''), in consideration of the permanent admission into the United States of the motor vehicles described above, voluntarily undertakes and agrees to have such vehicles brought into conformity with all applicable Federal motor vehicle safety and bumper standards within a reasonable time after such importation, as specified by the Administrator of the National Highway Traffic Safety Administration (the ''Administrator'');

(2) For each vehicle described above (''such vehicle''), the principal shall then file, with the Administrator, a certificate that such vehicle complies with each Federal motor vehicle safety standard in the year that such vehicle was manufactured and which applies in such year to such vehicle, and that such vehicle complies with the Federal bumper standard (if applicable);

(3) The principal shall not release custody of any vehicle to any person, or license or register the vehicle, from the date of entry until 30 calendar days after it has certified compliance of such vehicle to the Administrator, unless the Administrator notifies the principal before 30 days that (s)he has accepted such certification and such vehicle and all liability under this bond for such vehicle may be released, except that no such release shall be permitted, before or after the 30th calendar day, if the principal has received written notice from the Administrator that an inspection of such vehicle will be required, or that there is reason to believe that such certification is false or contains a misrepresentation.

(4) And if the principal has received written notice from the Administrator that an inspection of such vehicle is required, the principal shall cause such vehicle to be available for inspection, and such vehicle and all liability under this bond for such vehicle shall be promptly released after completion of an inspection showing no failure to comply. However, if the inspection shows a failure to comply, such vehicle and all liability under this bond for such vehicle shall not be released until such time as the failure to comply ceases to exist;

(5) And if the principal has received written notice from the Administrator that there is reason to believe that such certificate is false or contains a misrepresentation, such vehicle and all liability under this bond for such vehicle shall not be released until the Administrator is satisfied with such certification and any modification thereof;

(6) And if the principal has received written notice from the Administrator that such vehicle has been found not to comply with all applicable Federal motor vehicle safety and bumper standards, and written demand that such vehicle be abandoned to the United States, or delivered to the Secretary of Homeland Security for export (at no cost to the United States), the principal shall abandon such vehicle to the United States, or shall deliver such vehicle, or cause such vehicle to be delivered to, the custody of the Bureau of Customs and Border Protection at the port of entry listed above, or any other port of entry, and shall execute all documents necessary for exportation of such vehicle from the United States, at no cost to the United States; or in default of abandonment or redelivery after proper notice by the Administrator to the principal, the principal shall pay to the Administrator an amount equal to 150% of the entered value of such vehicle as determined by the Bureau of Customs and Border Protection;

Then this obligation shall be void; otherwise it shall remain in full force and effect. [At this point the terms agreed upon between the principal and surety for termination of the obligation may be entered]

Signed, sealed and delivered in the presence of

_____

PRINCIPAL: (name and address)

_____

(Signature) (SEAL)

_____

(Printed name and title)

_____

SURETY: (name and address)

_____

(Signature)

_____

(Printed name and title)

[60 FR 57954, Nov. 24, 1995, as amended at 69 FR 52093, Aug. 24, 2004]

APPENDIX C TO PART 591—POWER OF ATTORNEY AND AGREEMENT

_____ does constitute and appoint the Administrator of the National Highway Traffic Safety Administration, United States Department of Transportation, or delegate, as attorney for the undersigned, for and in the name of the undersigned to collect or to sell, assign, and transfer the securities described below as follows:

Title
Matures
Int. Rate
Denom.
Serial #
Coupon/registered

The securities having been deposited by it as security for the performance of the agreements undertaken in a bond with the United States, executed on the date of _____ , _____, the terms and conditions of which are incorporated by reference into this power of attorney and agreement and made a part hereof. The undersigned agrees that in case of any default in the performance of any of the agreements the attorney shall have full power to collect the securities or any part thereof, or to sell, assign, and transfer the securities or any part thereof, or to sell, assign, and transfer the securities of any part thereof at public or private sale, without notice, free from any equity of redemption and without appraisement or valuation, notice

and right to redeem being waived and to apply the proceeds of the sale or collection in whole or in part to the satisfaction of any obligation arising by reason of default. The undersigned further agrees that the authority granted by this agreement is irrevocable. The undersigned ratifies and confirms whatever the attorney shall do by virtue of this agreement.

Witnessed and signed this _____ day of _____, _____.

_____

Before me, the undersigned, a notary public within and for the County of _____ in the State of _____, personally appeared _____ and acknowledged the execution of the foregoing power of attorney.

Witness my hand and notarial seal this _____ day of _____, 199__.

[Notarial seal]

Notary Public _____

[58 FR 12909, Mar. 8, 1993]

PART 592—REGISTERED IMPORTERS OF VEHICLES NOT ORIGINALLY MANUFACTURED TO CONFORM TO THE FEDERAL MOTOR VEHICLE SAFETY STANDARDS

Sec.

592.1 Scope.
592.2 Purpose.
592.3 Applicability.
592.4 Definitions.
592.5 Requirements for registration and its maintenance.
592.6 Duties of a registered importer.
592.7 Suspension, revocation, and reinstatement of suspended registration.
592.8 Inspection; release of vehicle and bond.
592.9 Forfeiture of bond.

AUTHORITY: Pub. L. 100–562, 49 U.S.C. 322(a), 30117, 30141–30147; delegation of authority at 49 CFR 1.50.

SOURCE: 54 FR 40090, Sept. 29, 1989, unless otherwise noted.

§ 592.1 Scope.

This part establishes procedures under 49 U.S.C. 30141(c) for the registration of importers of motor vehicles that were not originally manufactured to comply with all applicable Federal motor vehicle safety standards. This part also establishes the duties of Registered Importers.

[59 FR 52098, Oct. 14, 1994]

§ 592.2 Purpose.

The purpose of this part is to provide content and format requirements for persons who wish to register with the Administrator as importers of motor vehicles not originally manufactured to conform to all applicable Federal motor vehicle safety standards, to provide procedures for the registration f importers and for the suspension, revocation and reinstatement of registration, and to set forth the duties required of Registered Importers.

§ 592.3 Applicability.

This part applies to any person who wishes to register with the Administrator as an importer of nonconforming vehicles, and to any person who is registered as an importer.

§ 592.4 Definitions.

All terms in this part that are defined in 49 U.S.C. 30102 and 30125 are used as defined therein.

Administrator means the Administrator, National Highway Traffic Safety Administration.

Independent insurance company means an entity that is registered with any State and authorized by that State to conduct an insurance business including the issuance or underwriting of a service insurance policy, none of whose affiliates, shareholders, officers, directors, or employees, or any person in affinity with such, is employed by, or has a financial interest in, or otherwise controls or participates in the business of, a Registered Importer to which it issues or underwrites a service insurance policy.

NHTSA means the National Highway Traffic Safety Administration.

Principal, with respect to a Registered Importer, means any officer of a corporation, a general partner of a partnership, or the sole proprietor of a sole proprietorship. The term includes a director of an incorporated Registered Importer, and any person whose ownership interest in a Registered Importer is 10% or more.

Registered Importer means any person that the Administrator has registered as an importer pursuant to section 592.5(b).

Safety recall means a notification and remedy campaign conducted pursuant

to 49 U.S.C. 30118–30120 to address a noncompliance with a Federal motor vehicle safety standard or a defect that relates to motor vehicle safety.

Service insurance policy means any policy issued or underwritten by an independent insurance company which covers a specific motor vehicle and guarantees that any noncompliance with a Federal motor vehicle safety standard or defect related to motor vehicle safety determined to exist in that vehicle will be remedied without charge to the owner of the vehicle.

[54 FR 40090, Sept. 29, 1989, as amended at 59 FR 52098, Oct. 14, 1994; 69 FR 52094, Aug. 24, 2004]

§592.5 Requirements for registration and its maintenance.

(a) Any person wishing to register as an importer of motor vehicles not originally manufactured to conform to all applicable Federal motor vehicle safety standards must file an application which:

(1) Is headed with the words ''Application for Registration as Importer'', and submitted in three copies to: Administrator, National Highway Traffic Safety Administration, Room 6115, 400 7th Street SW., Washington, DC 20590, Attn: NEF–32 Importer Registration.

(2) Is written in the English language.

(3) Sets forth the full name, street address, and title of the person preparing the application, and the full name, street address, e-mail address (if any), and telephone and facsimile machine (if any) numbers in the United States of the person for whom application is made (the ''applicant'').

(4) Specifies the form of the applicant's organization (*i.e.*, sole proprietorship, partnership, or corporation) and the State under which it is organized, and:

(i) If the applicant is an individual, the application must include the full name, street address, and date of birth of the individual.

(ii) If the applicant is a partnership, the application must include the full name, street address, and date of birth of each partner; if one or more of the partners is a limited partnership, the application must include the names and street addresses of the general partners and limited partners; if one or more of the partners is a corporation, the application must include the information specified by either paragraph (a)(4)(iii) or (iv) of this section, as applicable;

(iii) If the applicant is a non-public corporation, the application must include the full name, street address, and date of birth of each officer, director, manager, and person who is authorized to sign documents on behalf of the corporation. The application must also include the name of any person who owns or controls 10 percent or more of the corporation. The applicant must also provide a statement issued by the Office of the Secretary of State, or other responsible official of the State in which the applicant is incorporated, certifying that the applicant is a corporation in good standing;

(iv) If the applicant is a public corporation, the applicant must include a copy of its latest 10–K filing with the Securities and Exchange Commission, and provide the name and address of any person who is authorized to sign documents on behalf of the corporation;

(v) Contains a statement that the applicant has never had a registration revoked pursuant to §592.7, nor is it, nor was it, directly or indirectly, owned or controlled by, or under common ownership or control with, a Registered Importer that has had a registration revoked pursuant to §592.7; and

(vi) Identifies any shareholder, officer, director, employee, or any person in affinity with such, who has been previously affiliated with another Registered Importer in any capacity. If any such persons are identified, the applicant shall state the name of each such Registered Importer and the affiliation of any identified person.

(5) Includes the following:

(i) The street address and telephone number in the United States of each of its facilities for conformance, storage, and repair that the applicant will use to fulfill its duties as a Registered Importer and where the applicant will maintain the records it is required by this part to keep;

(ii) The street address that the applicant designates as its mailing address (in addition, an applicant may list a

post office box, provided that it is in the same city as the street address designated as its mailing address);

(iii) A copy of the applicant's business license or other similar document issued by an appropriate State or local authority, authorizing it to do business as an importer, or modifier, or seller of motor vehicles, as applicable to the applicant and with respect to each facility that the applicant has identified pursuant to paragraph (a)(5)(i) of this section, or a statement by the applicant that it has made a bona fide inquiry and is not required by such State or local authority to have such a license or document;

(iv) The name of each principal of the applicant whom the applicant authorizes to submit conformity certifications to NHTSA and the street address of the repair, storage, or conformance facility where each such principal will be located; and

(v) If an applicant is a corporation not organized under the laws of a State of the United States, or is a sole proprietorship or partnership located outside the United States, the application must be accompanied by the applicant's designation of an agent for service of process in the form specified by Section 551.45 of this chapter.

(6) Contains a statement that the applicant has never had a registration revoked pursuant to § 592.7, nor is it or was it, directly or indirectly, owned or controlled by, or under common ownership or control with, a person who has had a registration revoked pursuant to § 592.7.

(7) Contains a certified check payable to the Treasurer of the United States, for the amount of the initial annual fee established pursuant to part 594 of this chapter.

(8) Contains a copy of a contract to acquire, effective upon its registration as an importer, a prepaid mandatory service insurance policy underwritten by an independent insurance company, or a copy of such policy, in an amount that equals $2,000 for each motor vehicle for which the applicant will furnish a certificate of conformity to the Administrator, for the purpose of ensuring that the applicant will be able financially to remedy any noncompliance or safety related defect determined to exist in any such motor vehicle in accordance with part 573 and part 577 of this chapter. If the application is accompanied by a copy of a contract to acquire such a policy, the applicant shall provide NHTSA with a copy of the policy within 10 days after it has been issued to the applicant.

(9) Sets forth in full complete descriptive information, views, and arguments sufficient to establish that the applicant:

(i) Is technically able to modify any nonconforming motor vehicle to conform to all applicable Federal motor vehicle safety and bumper standards, including but not limited to the professional qualifications of the applicant and its employees at the time of the application (such as whether any such persons have been certified as mechanics), and a description of their experience in conforming and repairing vehicles;

(ii) Owns or leases one or more facilities sufficient in nature and size to repair, conform, and store the vehicles for which it provides certification of conformance to NHTSA and which it imports and may hold pending release of conformance bonds, including a copy of a deed or lease evidencing ownership or tenancy for each such facility, still or video photographs of each such facility, the street address and telephone number of each such facility;

(iii) Is financially and technically able to provide notification of and to remedy a noncompliance with a Federal motor vehicle safety standard or a defect related to motor vehicle safety determined to exist in the vehicles that it imports and/or for which it provides certification of conformity to NHTSA through repair, repurchase or replacement of such vehicles; and

(iv) Is able to acquire and maintain information regarding the vehicles that it imported and the names and addresses of owners of the vehicles that it imported and/or for which it provided certifications of conformity to NHTSA in order to notify such owners when a noncompliance or a defect related to motor vehicle safety has been determined to exist in such vehicles.

(10) Segregates and specifies any part of the information and data submitted under this part that the applicant

wishes to have withheld from public disclosure in accordance with part 512 of this chapter.

(11) Contains the statement: ''I certify that I have read and understood the duties of a Registered Importer, as set forth in 49 CFR 592.6, and that [name of applicant] will fully comply with each such duty. I further certify that all the information provided in this application is true and correct. I further certify that I understand that, in the event the registration for which it is applying is suspended or revoked, or lapses, [name of applicant] will remain obligated to notify owners and to remedy noncompliances or safety related defects, as required by 49 CFR 592.6(j), for each vehicle for which it has furnished a certificate of conformity to the Administrator.''

(12) Has the applicant's signature acknowledged by a notary public.

(b) If the application is incomplete, the Administrator notifies the applicant in writing of the information that is needed for the application to be complete and advises that no further action will be taken on the application until the applicant has furnished all the information needed.

(c) If the Administrator deems it necessary for a determination upon the application, NHTSA conducts an inspection of the applicant. Subsequent to the inspection, NHTSA calculates the costs attributable to such inspection, and notifies the applicant in writing that such costs comprise a component of the initial annual fee and must be paid before a determination is made upon its application.

(d) When the application is complete (and, if applicable, when the applicant has paid a sum representing the inspection component of the initial annual fee), the Administrator reviews the application and decides whether the applicant has complied with the requirements prescribed in paragraph (a) of this section. The Administrator shall base this decision on the application and upon any inspection NHTSA may have conducted of the applicant's conformance, storage, and recordkeeping facilities and any assessment of the applicant's personnel. If the Administrator decides that the applicant complies with the requirements, (s)he informs the applicant in writing and issues it a Registered Importer Number.

(e)(1) The Administrator shall deny registration to any applicant who (s)he decides does not comply with the requirements of paragraph (a) of this section and to an applicant whose previous registration has been revoked. The Administrator also may deny registration to an applicant that is or was owned or controlled by, or under common ownership or control with, or in affinity with, a Registered Importer whose registration has been revoked. In determining whether to deny an application, the Administrator may consider whether the applicant is comprised in whole or in part of relatives, employees, major shareholders, partners, or relatives of former partners or major shareholders, of a Registered Importer whose registration was revoked.

(2) If the Administrator denies an application, (s)he informs the applicant in writing of the reasons for denial and that the applicant is entitled to a refund of that component of the initial annual fee representing the remaining costs of administration of the registration program, but not those components of the initial annual fee representing the costs of processing the application, and, if applicable, the costs of conducting an inspection of the applicant's facilities.

(3) Within 30 days from the date of the denial, the applicant may submit a petition for reconsideration. The applicant may submit information and/or documentation supporting its request. If the Administrator grants registration as a result of the request, (s)he notifies the applicant in writing and issues it a Registered Importer Number. If the Administrator denies registration, (s)he notifies the applicant in writing and refunds that component of the initial annual fee representing the remaining costs of administration of the registration program, but does not refund those components of the initial annual fee representing the costs of processing the application, and, if applicable, the costs of conducting an inspection.

(f) In order to maintain its registration, a Registered Importer must file an annual statement. The Registered

Importer must affirm in its annual statement that all information provided in its application or pursuant to § 592.6(q), or as may have been changed in any notification that it has provided to the Administrator in compliance with § 592.6(l), remains correct, and that it continues to comply with the requirements for being a Registered Importer. The Registered Importer must include with its annual statement a current copy of its service insurance policy. Such statement must be titled ''Yearly Statement of Registered Importer,'' and must be filed not later than September 30 of each year. A Registered Importer must also pay any annual fee, and any other fee that is established under part 594 of this chapter. An annual fee must be paid not later than September 30 of any calendar year for the fiscal year that begins on October 1 of that calendar year. The Registered Importer must pay any other fee not later than 15 days after the date of the written notice from the Administrator.

(g) A registration granted under this part is not transferable.

(h) An applicant whose application is pending on September 30, 2004, and which has not provided the information required by paragraph (a) of this section, as amended, must provide all the information required by that subsection before the Administrator will give further consideration to the application.

[54 FR 40090, Sept. 29, 1989, as amended at 54 FR 47088, Nov. 9, 1989; 55 FR 37330, Sept. 11, 1990; 69 FR 52094, Aug. 24, 2004; 70 FR 57801, Oct. 4, 2005]

§ 592.6 Duties of a registered importer.

Each Registered Importer must:

(a) With respect to each motor vehicle that it imports into the United States, assure that the Administrator has decided that the vehicle is eligible for importation pursuant to part 593 of this chapter, prior to such importation. The Registered Importer must also bring such vehicle into conformity with all applicable Federal motor vehicle safety standards prescribed under part 571 of this chapter and the bumper standard prescribed under part 581 of this chapter, if applicable, and furnish certification to the Administrator pursuant to paragraph (e) of this section, within 120 calendar days after such entry. For each motor vehicle, the Registered Importer must furnish to the Secretary of Homeland Security at the time of importation a bond in an amount equal to 150 percent of the dutiable value of the vehicle, as determined by the Secretary of Homeland Security, to ensure that such vehicle either will be brought into conformity with all applicable Federal motor vehicle safety and bumper standards or will be exported (at no cost to the United States) by the importer or the Secretary of Homeland Security or abandoned to the United States. However, if the Registered Importer has procured a continuous entry bond, it must furnish the Administrator with such bond, and must furnish the Secretary of Homeland Security (acting on behalf of the Administrator) with a photocopy of such bond and Customs Form CF 7501 at the time of importation of each motor vehicle.

(b) Establish, maintain, and retain, for 10 years from the date of entry, at the facility in the United States it has identified in its application pursuant to § 592.5 (a)(5)(i), for each motor vehicle for which it furnishes a certificate of conformity, the following records, including correspondence and other documents, in hard copy format:

(1) The declaration required by § 591.5 of this chapter.

(2) All vehicle or equipment purchase or sales orders or agreements, conformance agreements between the Registered Importer and persons who import motor vehicles for personal use, and correspondence between the Registered Importer and the owner or purchaser of the vehicle.

(3) The make, model, model year, odometer reading, and VIN of each vehicle that it imports and the last known name and address of the owner or purchaser of the vehicle.

(4) Records, including photographs and other documents, sufficient to identify the vehicle and to substantiate that it has been brought into conformity with all Federal motor vehicle safety and bumper standards that apply to the vehicle, that the certification label has been affixed, and that either the vehicle is not subject to any

safety recalls or that all noncompliances and safety defects covered by such recalls were remedied before the submission to the Administrator under paragraph (d) of this section. All photographs submitted shall be unaltered.

(5) A copy of the certification submitted to the Administrator pursuant to paragraph (d) of this section.

(6) The number that the issuer has assigned to the service insurance policy that will accompany the vehicle and the full corporate or other business name of the issuer of the policy, and substantiation that the Registered Importer has notified the issuer of the policy that the policy has been provided with the vehicle.

(c) Take possession of the vehicle and perform all modifications necessary to conform the vehicle to all Federal motor vehicle safety and bumper standards that apply to the vehicle at a facility that it has identified to the Administrator pursuant to §592.5(a)(5)(i), and permanently affix to the vehicle at that facility, upon completion of conformance modifications and remedy of all noncompliances and defects that are the subject of any pending safety recalls, a label that identifies the Registered Importer and states that the Registered Importer certifies that the vehicle complies with all Federal motor vehicle safety and bumper standards that apply to the vehicle, and contains all additional information required by §567.4 of this chapter.

(d) For each motor vehicle, certify to the Administrator:

(1) Within 120 days of the importation that it has brought the motor vehicle into conformity with all applicable Federal motor vehicle safety and bumper standards in effect at the time the vehicle was manufactured by the fabricating manufacturer. Such certification shall state verbatim either that ''I know that the vehicle that I am certifying conforms with all applicable Federal motor vehicle safety and bumper standards because I personally witnessed each modification performed on the vehicle to effect compliance,'' or that ''I know that the vehicle I am certifying conforms with all applicable Federal motor vehicle safety and bumper standards because the person who performed the necessary modifications to the vehicle is an employee of [RI name] and has provided full documentation of the work that I have reviewed, and I am satisfied that the vehicle as modified complies.'' The Registered Importer shall also certify, as appropriate, that either:

(i) The vehicle is not required to comply with the parts marking requirements of the theft prevention standard (part 541 of this chapter); or

(ii) The vehicle complies with those parts marking requirements as manufactured, or as modified prior to importation.

(2) If the Registered Importer certifies that the vehicle was originally manufactured to comply with a standard that does not apply to the vehicle or that it has modified the vehicle to conform to such standard, or if the certification is incomplete, the Administrator may refuse to accept the certification. The Administrator shall refuse to accept a certification for a vehicle that has not been determined to be eligible for importation under part 593 of this chapter. If the Administrator does not accept a submission, (s)he shall return it to the Registered Importer. The costs associated with such a return will be charged to the Registered Importer. If the Administrator returns the submission as described above and the vehicle is eligible for importation, the 120-day period specified in paragraph (d)(1) of this section continues to run, but the 30-day period specified in paragraph (f) of this section does not begin to run until the Administrator has accepted the submission. If the vehicle is not eligible for importation, the importer must export it from, or abandon it to, the United States. If the Registered Importer certifies that it has modified the vehicle to bring it into compliance with a standard and has, in fact, not performed all required modifications, the Administrator will regard such certification as ''knowingly false'' within the meaning of 49 U.S.C. 30115 and 49 U.S.C. 30141(c)(4)(B).

(3) The certification must be signed and submitted by a principal of the Registered Importer designated in its registration application pursuant to §592.5(a)(5)(iv), with an original hand-

written signature and not with a signature that is stamped or mechanically applied.

(4) The certification to the Administrator must specify the location of the facility where the vehicle was conformed, and the location where the Administrator may inspect the motor vehicle.

(5) The certification to the Administrator must state and contain substantiation either that the vehicle is not subject to any safety recalls as of the time of such certification, or, alternatively, that all noncompliances and defects that are the subject of those safety recalls have been remedied.

(6) When a Registered Importer certifies a make, model, and model year of a motor vehicle for the first time, its certification must include:

(i) The make, model, model year and date of manufacture, odometer reading, VIN that complies with § 565.4(b), (c), and (g) of this chapter, and Customs Entry Number,

(ii) A statement that it has brought the vehicle into conformity with all Federal motor vehicle safety and bumper standards that apply to the vehicle, and a description, with respect to each standard for which modifications were needed, of the modifications performed,

(iii) A copy of the bond given at the time of entry to ensure conformance with the safety and bumper standards,

(iv) The vehicle's vehicle eligibility number, as stated in appendix A to part 593 of this chapter,

(v) A copy of the HS–7 Declaration form executed at the time of its importation if a Customs broker did not make an electronic entry for the vehicle with the Bureau of Customs and Border Protection,

(vi) Unaltered front, side, and rear photographs of the vehicle,

(vii) Unaltered photographs of the original manufacturer's certification label and the certification label of the Registered Importer affixed to the vehicle (and, if the vehicle is a motorcycle, a photograph or photocopy of the Registered Importer certification label before it has been affixed),

(viii) Unaltered photographs and documentation sufficient to demonstrate conformity with all applicable Federal motor vehicle safety and bumper standards to which the vehicle was not originally manufactured to conform,

(ix) The policy number of the service insurance policy furnished with the vehicle pursuant to paragraph (g) of this section, and the full corporate or other business name of the insurer that issued the policy, and

(x) A statement that the submission is the Registered Importer's initial certification submission for the make, model, and model year of the vehicle covered by the certification.

(7) Except as specified in this paragraph, a Registered Importer's second and subsequent certification submissions for a given make, model, and model year vehicle must contain the information required by paragraph (d)(6) of this section. If the Registered Importer conformed such a vehicle in the same manner as it stated in its initial certification submission, it may say so in a subsequent submission and it need not provide the description required by paragraph (d)(6)(ii) of this section.

(e) With respect to each motor vehicle that it imports, not take any of the following actions until the bond referred to in paragraph (a) of this section has been released, unless 30 days have elapsed from the date the Administrator receives the Registered Importer's certification of compliance of the motor vehicle in accordance with paragraph (d) of this section (the 30-day period will be extended if the Administrator has made written demand to inspect the motor vehicle):

(1) Operate the motor vehicle on the public streets, roads, and highways for any purpose other than:

(i) Transportation to and from a franchised dealership of the vehicle's original manufacturer for remedying a noncompliance or safety-related defect; or

(ii) Mileage accumulation to stabilize the vehicle's catalyst and emissions control systems in preparation for precertification testing to obtain an Environmental Protection Agency (EPA) certificate of conformity, but only insofar as the vehicle has been imported by an Independent Commercial Importer (ICI) who holds a current certificate of conformity with the EPA, the ICI has imported the vehicle under an

EPA Declaration form 3520–1 on which Code J is checked, and the EPA has granted the ICI written permission to operate the vehicle on public roads for that purpose.

(2) Sell the motor vehicle or offer it for sale;

(3) Store the motor vehicle on the premises of a motor vehicle dealer;

(4) Title the motor vehicle in a name other than its own, or license or register it for use on public streets, roads, or highways; or

(5) Release custody of the motor vehicle to a person for sale, or for license or registration for use on public streets, roads, and highways, or for titling in a name other than that of the Registered Importer who imported the vehicle.

(f) Furnish with each motor vehicle for which it furnishes certification or information to the Administrator in accordance with paragraph (d) of this section, not later than the time it sells the vehicle, or releases custody of a vehicle to an owner who has imported it for personal use, a service insurance policy written or underwritten by an independent insurance company, in the amount of $2,000. The Registered Importer shall provide the insurance company with a monthly list of the VINs of vehicles covered by the policies of the insurance company, and shall retain a copy of each such list in its files.

(g) Comply with the requirements of part 580 of this chapter, *Odometer Disclosure Requirements,* when the Registered Importer is a transferor of a vehicle as defined by §580.3 of this chapter.

(h) With respect to any motor vehicle it has imported and for which it has furnished a performance bond, deliver such vehicle to the Secretary of Homeland Security for export, or abandon it to the United States, upon demand by the Administrator, if such vehicle has not been brought into conformity with all applicable Federal motor vehicle safety and bumper standards within 120 days from entry.

(i)(1) With respect to any motor vehicle that it has imported or for which it has furnished a certificate of conformity or information to the Administrator as provided in paragraph (d) of this section, provide notification in accordance with part 577 of this chapter and a remedy without charge to the vehicle owner, after any notification under part 573 of this chapter that a vehicle to which such motor vehicle is substantially similar contains a defect related to motor vehicle safety or fails to conform with an applicable Federal motor vehicle safety standard. However, this obligation does not exist if the manufacturer of the vehicle or the Registered Importer of such vehicle demonstrates to the Administrator that the defect or noncompliance is not present in such vehicle, or that the defect or noncompliance was remedied before the submission of the certificate or the information to the Administrator, or that the original manufacturer of the vehicle will provide such notification and remedy.

(2) If a Registered Importer becomes aware (from whatever source) that the manufacturer of a vehicle it has imported will not provide a remedy without charge for a defect or noncompliance that has been determined to exist in that vehicle, within 30 days thereafter, the Registered Importer must inform NHTSA and submit a copy of the notification letter that it intends to send to owners of the vehicle(s) in question.

(3) Any notification to vehicle owners sent by a Registered Importer must contain the information specified in §577.5 of this chapter, and must include the statement that if the Registered Importer's repair facility is more than 50 miles from the owner's mailing address, remedial repairs may be performed at no charge at a specific facility designated by the Registered Importer that is within 50 miles of the owner's mailing address, or, if no such facility is designated, that repairs may be performed anywhere, with the cost of parts and labor to be reimbursed by the Registered Importer.

(4) Defect and noncompliance notifications by a Registered Importer must conform to the requirements of §§577.7 and 577.8 of this chapter, and are subject to §§577.9 and 577.10 of this chapter.

(5) Except as provided in this paragraph, instead of the six quarterly reports required by §573.7(a) of this chapter, the Registered Importer must submit to the Administrator two reports

containing the information specified in § 573.7(b)(1) through (4) of this chapter. The reports shall cover the periods ending nine and 18 months after the commencement of the owner notification campaign, and must be submitted within 30 days of the end of each period. However, the reporting requirements established by this paragraph shall not apply to any safety recall that a vehicle manufacturer conducts that includes vehicles for which the Registered Importer has submitted the information required by paragraph (d) of this section.

(6) The requirement that the remedy be provided without charge does not apply if the motor vehicle was bought by its first purchaser from the Registered Importer (or, if imported for personal use, conformed pursuant to a contract with the Registered Importer) more than 10 calendar years before the date the Registered Importer or the original manufacturer notifies the Administrator of the noncompliance or safety-related defect pursuant to part 573 of this chapter.

(j) In order that the Administrator may determine whether the Registered Importer is meeting its statutory responsibilities, allow representatives of NHTSA during operating hours, upon demand, and upon presentation of credentials, to copy documents, or to inspect, monitor, or photograph any of the following:

(1) Any facility identified by the Registered Importer where any vehicle for which a Registered Importer has the responsibility of providing a certificate of conformity to the Administrator is being modified, repaired, tested, or stored, and any facility where any record or other document relating to the modification, repair, testing, or storage of these vehicles is kept;

(2) Any part or aspect of activities relating to the modification, repair, testing, or storage of vehicles by the Registered Importer; and

(3) Any motor vehicle for which the Registered Importer has provided a certification of conformity to the Administrator before the Administrator releases the conformance bond.

(k) Provide an annual statement and pay an annual fee as required by § 592.5(f).

(l) Except as noted in this paragraph, notify the Administrator in writing of any change that occurs in the information which was submitted in its registration application, not later than the 30th calendar day after such change. If a Registered Importer intends to use a facility that was not identified in its registration application, not later than 30 days before it begins to use such facility, it must notify the Administrator of its intent to use such facility and provide a description of the intended use, a copy of the lease or deed evidencing the Registered Importer's ownership or tenancy of the facility, and a copy of the license or similar document issued by an appropriate state or municipal authority stating that the Registered Importer is licensed to do business at that facility as an importer and/or modifier and/or seller of motor vehicles (or a statement that it has made a *bona fide* inquiry and is not required by state or local law to have such a license or permission), and a sufficient number of unaltered photographs of that facility to fully depict the Registered Importer's intended use. If a Registered Importer intends to change its street address or telephone number or discontinue use of a facility that was identified in its registration application, it shall notify the Administrator not less than 10 days before such change or discontinuance of such use, and identify the facility, if any, that will be used instead.

(m) Assure that at least one full-time employee of the Registered Importer is present at at least one of the Registered Importer's facilities in the United States during normal business hours.

(n) Not co-utilize the same employee, or any repair or conformance facility, with any other Registered Importer. If a Registered Importer co-utilizes the same storage facility with another Registered Importer or another entity, the storage area of each Registered Importer must be clearly delineated, and the vehicles being stored by each Registered Importer may not be mingled with vehicles for which that Registered Importer is not responsible.

(o) Make timely, complete, and accurate responses to any requests by the

Administrator for information, whether by general or special order or otherwise, to enable the Administrator to decide whether the Registered Importer has complied or is complying with 49 U.S.C. Chapters 301 and 325, and the regulations issued thereunder.

(p) Pay all fees either by certified check, cashier's check, money order, credit card, or Electronic Funds Transfer System made payable to the Treasurer of the United States, in accordance with the invoice of fees incurred by the Registered Importer in the previous month that is provided by the Administrator. All such fees are due and payable not later than 15 days from the date of the invoice.

(q) Not later than November 1, 2004, file with the Administrator all information required by § 592.5(a), as amended. If a Registered Importer has previously provided any item of information to the Administrator in its registration application, annual statement, or notification of change, it may incorporate that item by reference in the filing required under this subsection, provided that it clearly indicates the date, page, and entry of the previously-provided document.

[69 FR 52095, Aug. 24, 2004, as amended at 70 FR 57801, Oct. 4, 2005]

§ 592.7 Suspension, revocation, and reinstatement of suspended registrations.

This section specifies the acts and omissions that may result in suspensions and revocations of registrations issued to Registered Importers by NHTSA, the process for such suspensions and revocations, and the provisions applicable to the reinstatement of suspended registrations.

(a) *Automatic suspension of a registration.* 49 U.S.C. 30141(c)(4)(B) explicitly authorizes NHTSA to automatically suspend a registration when a Registered Importer does not, in a timely manner, pay a fee required by part 594 of this chapter or knowingly files a false or misleading certification under 49 U.S.C. 30146. NHTSA also may automatically suspend a registration under other circumstances, as specified in paragraphs (3), (4) and (5) of this section.

(1) If the Administrator has not received the annual fee from a Registered Importer by the close of business on October 10 of a year, or, if October 10 falls on a weekend or holiday, by the next business day thereafter, or has not received any other fee owed by a Registered Importer within 15 calendar days from the date of the Administrator's invoice, the Registered Importer's registration will be automatically suspended at the beginning of the next business day. The Administrator will promptly notify the Registered Importer in writing of the suspension. Such suspension shall remain in effect until reinstated pursuant to paragraph (c)(1) of this section.

(2) If the Administrator decides that a Registered Importer has knowingly filed a false or misleading certification, (s)he shall promptly notify the Registered Importer in writing that its registration is automatically suspended. The notification shall inform the Registered Importer of the facts and conduct upon which the decision is based, and the period of suspension (which begins as of the date indicated in the Administrator's written notification). The notification shall afford the Registered Importer an opportunity to seek reconsideration of the decision by presenting data, views, and arguments in writing and/or in person, within 30 days. Not later than 30 days after the submission of data, views, and arguments, the Administrator, after considering all the information available, shall notify the Registered Importer in writing of his or her decision on reconsideration. Any suspension issued under this paragraph shall remain in effect until reinstated pursuant to paragraph (c)(2) of this section.

(3) If mail is undeliverable to the Registered Importer at the official street address it has provided to the Administrator, or if the telephone has been disconnected at the telephone number specified by the Registered Importer, the Administrator may automatically suspend the Registered Importer's registration. Such suspension shall remain in effect until the registration is reinstated pursuant to paragraph (c)(3) of this section.

(4) If a Registered Importer, not later than November 1, 2004, does not file

with the Administrator all information required by § 592.5(a), as required by § 592.6(q), the Administrator may automatically suspend the registration. The Administrator shall promptly notify the Registered Importer in writing of the suspension. Such a suspension shall remain in effect until the registration is reinstated pursuant to paragraph (c)(4) of this section.

(5) If a Registered Importer releases one or more motor vehicles on the basis of a forged or falsified bond release letter, and the Administrator has not in fact issued such a letter, the Administrator may automatically suspend the registration. The Administrator shall promptly notify the Registered Importer in writing of the suspension.

(6) The Administrator, in his or her sole discretion, may provide notice of a proposed automatic suspension or revocation for reasons specified in paragraphs (a)(1) through (a)(5) of this section.

(7) The notification shall afford the Registered Importer an opportunity to seek reconsideration of the decision by presenting data, views, and arguments in writing and/or in person, within 30 days of such notification, before a decision, as provided in paragraph (b)(2) of this section. Not later than 30 days after the submission of data, views, and arguments, the Administrator, after considering all the information available, shall notify the Registered Importer in writing of his or her decision on reconsideration. Any automatic suspension issued under this paragraph shall remain in effect until reinstated pursuant to paragraph (c)(2) of this section.

(b) *Non-automatic suspension or revocation of a registration.* (1) 49 U.S.C. 30141(c)(4)(A) authorizes NHTSA to revoke or suspend a registration if a Registered Importer does not comply with a requirement of 49 U.S.C. 30141–30147, or any of 49 U.S.C. 30112, 30115, 30117–30122, 30125(c), 30127, or 30166, or any regulations issued under these sections. These regulations include, but are not limited to, parts 567, 568, 573, 577, 591, 593, and 594 of this chapter.

(2) When the Administrator has reason to believe that a Registered Importer has violated one or more of the statutes or regulations cited in paragraph (b)(1) of this section and that suspension or revocation would be an appropriate sanction under the circumstances, (s)he shall notify the Registered Importer in writing of the facts giving rise to the allegation of a violation and the proposed length of a suspension, if applicable, or revocation. The notice shall afford the Registered Importer an opportunity to present data, views, and arguments, in writing and/or in person, within 30 days of the date of the notice, as to whether the violation occurred, why the registration ought not to be suspended or revoked, or whether the suspension should be shorter than proposed. If the Administrator decides, on the basis of the available information, that the Registered Importer has violated a statute or regulation, the Administrator may suspend or revoke the registration. The Administrator shall notify the Registered Importer in writing of the decision, including the reasons for it. A suspension or revocation is effective as of the date of the Administrator's written notification unless another date is specified therein. The Administrator shall state the period of any suspension in the notice to the Registered Importer. There shall be no opportunity to seek reconsideration of a decision issued under this paragraph.

(c) *Reinstatement of suspended registrations.* (1) When a registration has been suspended under paragraph (a)(1) of this section, the Administrator will reinstate the registration when all fees owing are paid by wire transfer or certified check from a bank in the United States, together with a sum representing 10 percent of the amount of the fees that were not timely paid.

(2) When a registration has been suspended under paragraph (a)(2) or (a)(5) of this section, the registration will be reinstated after the expiration of the period of suspension specified by the Administrator, or such earlier date as the Administrator may subsequently decide is appropriate.

(3) When a registration has been suspended under paragraph (a)(3) of this section, the registration will be reinstated when the Administrator decides that the Registered Importer has provided a street address to which mail to

it is deliverable and a telephone number in its name that is in service.

(4) When a registration has been suspended under paragraph (a)(4) of this section, the registration will be reinstated when the Administrator decides that the Registered Importer has provided all relevant documentation and information required by § 592.6(q).

(5) When a registration has been suspended under paragraph (b) of this section, the registration will be reinstated after the expiration of the period of suspension specified by the Administrator, or such earlier date as the Administrator may subsequently decide is appropriate.

(6) When a suspended registration has been reinstated, NHTSA shall notify the Bureau of Customs and Border Protection promptly.

(7) If a Registered Importer imports a motor vehicle on or after the date that its registration is suspended and before the date that the suspension ends, the Administrator may extend the suspension period by one day for each day that the Registered Importer has imported a motor vehicle during the time that its registration has been suspended.

(d) *Effect of suspension or revocation.* (1) If a Registered Importer's registration is suspended or revoked, as of the date of suspension or revocation the entity will not be considered a Registered Importer, will not have the rights and authorities appertaining thereto, and must cease importing, and will not be allowed to import, vehicles for resale. The Registered Importer will not be refunded any annual or other fees it has paid for the fiscal year in which its registration is revoked. The Administrator shall notify the Bureau of Customs and Border Protection of any suspension or revocation of a registration not later than the first business day after such action is taken.

(2) With respect to any vehicle for which it has not affixed a certification label and submitted a certificate of conformity to the Administrator under § 592.6(d) at the time it is notified that its registration has been suspended or revoked, the Registered Importer must affix a certification label and submit a certificate of conformity within 120 days from the date of entry.

(3) When a registration has been revoked or suspended, the Registered Importer must export within 30 days of the effective date of the suspension or revocation all vehicles that it imported to which it has not affixed a certification label and furnished a certificate of conformity to the Administrator pursuant to § 592.6(d).

(4) With respect to any vehicle imported pursuant to § 591.5(f)(2)(ii) of this chapter that the Registered Importer has agreed to bring into compliance with all applicable standards and for which it has not certified and furnished a certificate of conformity to the Administrator, the Registered Importer must immediately notify the owner of the vehicle in writing that its registration has been suspended or revoked.

(e) *Continuing obligations.* A Registered Importer whose registration is suspended or revoked remains obligated under § 592.6(i) to notify owners and to remedy noncompliances or safety related defects for each vehicle for which it has furnished a certificate of conformity to the Administrator.

[69 FR 52098, Aug. 24, 2004]

§ 592.8 Inspection; release of vehicle and bond.

(a) With respect to any motor vehicle for which it must provide a certificate of conformity to the Administrator as required by § 592.6(d), a Registered Importer shall not obtain title, licensing, or registration of the motor vehicle for use on the public roads, or release custody of it for such titling, licensing, or registration, except in accordance with the provisions of this section.

(b) When conformance modifications to a motor vehicle have been completed, a Registered Importer shall submit the certification required by § 592.6(d) to the Administrator. In certifying a vehicle that the Administrator has determined to be substantially similar to one that has been certified by its original manufacturer for sale in the United States, the Registered Importer may rely on any certification by the original manufacturer with respect to identical safety features if it also certifies that any modification that it undertook did not affect the compliance of such safety features. Each submission shall be mailed by certified

mail, return receipt requested, or by private carriers such as Federal Express, to: Administrator, National Highway Traffic Safety Administration, Room 6115, 400 7th Street SW., Washington, DC, 20590, Attn: NEF–32, or be submitted electronically by FAX (202–366–1024), or in person. Each submission shall identify the location where the vehicle will be stored and is available for inspection, pending NHTSA action upon the submission.

(c) Before the end of the 30th calendar day after receiving a complete certification under § 592.6(d), the Administrator may notify the Registered Importer in writing that an inspection of the vehicle is required to verify the certification. Written notice includes a proposed inspection date, which is as soon as practicable. If inspection of the vehicle indicates that the vehicle has been properly certified, at the conclusion of the inspection the Registered Importer is provided an instrument of release. If inspection of the vehicle shows that the vehicle has not been properly certified, the Registered Importer shall either make the modifications necessary to substantiate its certification, and provide a new certification for the standard(s) in the manner provided for in paragraph (b) of this section, or deliver the vehicle to the Secretary of the Treasury for export, or abandon it to the United States. Before the end of the 30th calendar day after receipt of new certification, the Administrator may require a further inspection in accordance with the provisions of this subsection.

(d) The Administrator may by written notice request the Registered Importer to verify its certification of a motor vehicle before the end of the 30th calendar day after the date the Administrator receives a complete certification under § 592.6(d). If the basis for such request is that the certification is false or contains a misrepresentation, the Registered Importer shall be afforded an opportunity to present written data, views, and arguments as to why the certification is not false or misleading or does not contain a misrepresentation. The Administrator may require an inspection pursuant to paragraph (c) of this section. The motor vehicle and performance bond involved shall not be released unless the Administrator is satisfied with the certification.

(e) If the Registered Importer has received no written notice from the Administrator by the end of the 30th calendar day after it has furnished a complete certification under section 592.6(d) of this chapter, the Registered Importer may release the vehicle from custody, sell or offer it for sale, or have it titled, licensed, or registered for use on the public roads.

(f) If the Administrator accepts a certification without requiring an inspection, (s)he notifies the Registered Importer in writing, and provides a copy to the importer of record. Such notification shall be provided not later than the 25th calendar day after the Administrator has received such certification.

(g) Release of the performance bond shall constitute acceptance of certification or completion of inspection of the vehicle concerned, but shall not preclude a subsequent decision by the Administrator pursuant to 49 U.S.C. 30118 that the vehicle fails to conform to any applicable Federal motor vehicle safety standard.

[54 FR 40090, Sept. 29, 1989, as amended at 55 FR 37330, Sept. 11, 1990; 59 FR 52098, Oct. 14, 1994; 69 FR 52100, Aug. 24, 2004]

§ 592.9 Forfeiture of bond.

A Registered Importer is required by § 591.6 of this chapter to furnish a bond with respect to each motor vehicle that it imports. The conditions of the bond are set forth in § 591.8 of this chapter. Failure to fulfill any one of these conditions may result in forfeiture of the bond. A bond may be forfeited if the Registered Importer:

(a) Fails to bring the motor vehicle covered by the bond into compliance with all applicable standards issued under part 571 and part 581 of this chapter within 120 days from the date of entry;

(b) Fails to file with the Administrator a certificate that the motor vehicle complies with each Federal motor vehicle safety, bumper, and theft prevention standard in effect at the time the vehicle was manufactured and which applies to the vehicle;

(c) Fails to cause a motor vehicle to be available for inspection if it has received written notice from the Administrator that an inspection is required;

(d) Releases the motor vehicle before the Administrator accepts the certification and any modification thereof, if it has received written notice from the Administrator that there is reason to believe that the certification is false or contains a misrepresentation;

(e) Before the bond is released, releases custody of the motor vehicle to any person for license or registration for use on public roads, streets, and highways, or licenses or registers the vehicle, including titling the vehicle in the name of another person, unless 30 calendar days have elapsed after the Registered Importer has filed a complete certification under §592.6(d), and the Registered Importer has not received written notice pursuant to paragraph (a)(3) or (a)(4) of this section. For purposes of this part, a vehicle is deemed to be released from custody if it is not located at a duly identified facility of the Registered Importer and the Registered Importer has not notified the Administrator in writing of the vehicle's location or, if written notice has been provided, if the Administrator is unable to inspect the vehicle, or if the Registered Importer has transferred title to any other person regardless of the vehicle's location; or

(f) Fails to deliver the vehicle, or cause it to be delivered, to the custody of the Bureau of Customs and Border Protection at any port of entry, for export or abandonment to the United States, and to execute all documents necessary to accomplish such purposes, if the Administrator has furnished it written notice that the vehicle has been found not to comply with all applicable Federal motor vehicle safety standards along with a demand that the vehicle be delivered for export or abandoned to the United States.

[69 FR 52100, Aug. 24, 2004]

PART 593—DETERMINATIONS THAT A VEHICLE NOT ORIGINALLY MANUFACTURED TO CONFORM TO THE FEDERAL MOTOR VEHICLE SAFETY STANDARDS IS ELIGIBLE FOR IMPORTATION

Sec.
593.1 Scope.
593.2 Purpose.
593.3 Applicability.
593.4 Definitions.
593.5 Petitions for eligibility determinations.
593.6 Basis for petition.
593.7 Processing of petitions.
593.8 Determinations on the agency's initiative.
593.9 Effect of affirmative determinations; lists.
593.10 Availability for public inspection.
APPENDIX A TO PART 593—LIST OF VEHICLES DETERMINED TO BE ELIGIBLE FOR IMPORTATION

AUTHORITY: 49 U.S.C. 322 and 30141(b); delegation of authority at 49 CFR 1.50.

SOURCE: 54 FR 40099, Sept. 29, 1989, unless otherwise noted.

§593.1 Scope.

This part establishes procedures under section 108(c) of the National Traffic and Motor Vehicle Safety Act, as amended (15 U.S.C. 1397(c)), for making determinations whether a vehicle that was not originally manufactured to conform with all applicable Federal motor vehicle safety standards, and is not otherwise eligible for importation under part 591 of this chapter, may be imported into the United States because it can be modified to meet the Federal standards.

§593.2 Purpose.

The purpose of this part is to provide content and format requirements for any Registered Importer and manufacturer who wishes to petition the Administrator for a determination that a vehicle not originally manufactured to conform to all applicable Federal motor vehicle safety standards is eligible to be imported into the United States because it can be modified to meet the standards. The purpose of this part is also to specify procedures under which the Administrator makes eligibility determinations pursuant to

those petitions as well as eligibility determinations on the agency's initiative.

§ 593.3 Applicability.

This part applies to a motor vehicle that was not originally manufactured and certified by its original manufacturer to conform with all applicable Federal motor vehicle safety standards and that is offered for importation into the United States.

§ 593.4 Definitions.

All terms in this part that are defined in section 102 of the National Traffic and Motor Vehicle Safety Act (15 U.S.C. 1391) are used as defined therein.

Administrator means the Administrator of the National Highway Traffic Safety Administration.

Model year means the year used by a manufacturer to designate a discrete vehicle model irrespective of the calendar year in which the vehicle was actually produced, or the model year as designated by the vehicle's country of origin, or, if neither the manufacturer nor the country of origin has made such a designation, the calendar year that begins on September 1 and ends on August 31 of the next calendar year.

NHTSA means the National Highway Traffic Safety Administration.

Registered Importer means any person who has been granted registered importer status by the Administrator pursuant to paragraph 592.5(b) of this chapter, and whose registration has not been revoked.

§ 593.5 Petitions for eligibility determinations.

(a) A manufacturer or Registered Importer may petition the Administrator for a determination that a vehicle that does not comply with all applicable Federal motor vehicle safety standards is eligible for importation, either

(1) On the basis that the vehicle:

(i) Is substantially similar to a vehicle which was originally manufactured for importation into and sale in the United States and which bore a certification affixed by its manufacturer pursuant to part 567 of this chapter, and

(ii) Is capable of being readily modified to conform to all applicable Federal motor vehicle safety standards; or

(2) On the basis that the vehicle has safety features that comply with or are capable of being modified to comply with all applicable Federal motor vehicle safety standards.

(b) Each petition filed under this part must—

(1) Be written in the English language;

(2) Be headed with the words ''Petition for Import Eligibility Determination'' and submitted in three copies to: Administrator, National Highway Traffic Safety Administration, Room 6115, 400 7th Street SW., Washington, DC 20590, Attn: NEF–32 Import Eligibility Determinations;

(3) State the full name and address of the petitioner.

(4) If the petitioner is a Registered Importer, include the Registered Importer Number assigned by NHTSA pursuant to part 592 of this chapter.

(5) Set forth the basis for the petition and the information required by § 593.6 (a) or (b), as appropriate;

(6) Specify any part of the information and data submitted which petitioner requests be withheld from public disclosure in accordance with part 512 of this chapter; and

(7) Submit a certified check payable to the Treasurer of the United States, for the amount of the vehicle eligibility petition fee established pursuant to part 594 of this chapter.

(c) The knowing and willful submission of false, fictitious or fraudulent information may subject the petitioner to the criminal penalties of 18 U.S.C. 1001.

[54 FR 40099, Sept. 29, 1989, as amended at 55 FR 37330, Sept. 11, 1990]

§ 593.6 Basis for petition.

(a) If the basis for the petition is that the vehicle is substantially similar to a vehicle which was originally manufactured for importation into and sale in the United States, and which was certified by its manufacturer pursuant to part 567 of this chapter, and that it is capable of being readily modified to conform to all applicable Federal

motor vehicle safety standards, the petitioner shall provide the following information:

(1) Identification of the original manufacturer, model, and model year of the vehicle for which a determination is sought.

(2) Identification of the original manufacturer, model, and model year of the vehicle which the petitioner believes to be substantially similar to that for which a determination is sought.

(3) Substantiation that the manufacturer of the vehicle identified by the petitioner under paragraph (a)(2) of this section originally manufactured it for importation into and sale in the United States, and affixed a label to it certifying that it complied with all applicable Federal motor vehicle safety standards.

(4) Data, views and arguments demonstrating that the vehicle identified by the petitioner under paragraph (a)(1) of this section is substantially similar to the vehicle identified by the petitioner under paragraph (a)(2) of this section.

(5) With respect to each Federal motor vehicle safety standard that applied to the vehicle identified by the petitioner under paragraph (a)(2) of this section, data, views, and arguments demonstrating that the vehicle identified by the petitioner under paragraph (a)(1) of this section either was originally manufactured to conform to such standard, or is capable of being readily modified to conform to such standard.

(b) If the basis of the petition is that the vehicle's safety features comply with or are capable of being modified to comply with all applicable Federal motor vehicle safety standards, the petitioner shall provide the following information:

(1) Identification of the model and model year of the vehicle for which a determination is sought.

(2) With respect to each Federal motor vehicle safety standard that would have applied to such vehicle had it been originally manufactured for importation into and sale in the United States, data, views, and arguments demonstrating that the vehicle has safety features that comply with or are capable of being modified to conform with such standard. The latter demonstration shall include a showing that after such modifications, the features will conform with such standard.

§ 593.7 Processing of petitions.

(a) NHTSA will review each petition for sufficiency under §§ 593.5 and 593.6. If the petition does not contain all the information required by this part, NHTSA notifies the petitioner, pointing out the areas of insufficiency, and stating that the petition will not receive further consideration until the required information is provided. If the additional information is not provided within the time specified by NHTSA in its notification, NHTSA may dismiss the petition as incomplete, and so notify the petitioner. When the petition is complete, its processing continues.

(b) NHTSA publishes in the FEDERAL REGISTER, affording opportunity for comment, a notice of each petition containing the information required by this part.

(c) No public hearing, argument, or other formal proceeding is held on a petition filed under this part.

(d) If the Administrator is unable to determine that the vehicle in a petition submitted under § 593.6(a) is one that is substantially similar, or (if it is substantially similar) is capable of being readily modified to meet the standards, (s)he notifies the petitioner, and offers the petitioner the opportunity to supplement the petition by providing the information required for a petition submitted under paragraph 593.6(b).

(e) If the Administrator determines that the petition does not clearly demonstrate that the vehicle model is eligible for importation, (s)he denies it and notifies the petitioner in writing. (S)he also publishes in the FEDERAL REGISTER a notice of denial and the reasons for it. A notice of denial also states that the Administrator will not consider a new petition covering the model that is the subject of the denial until at least 3 months from the date of the notice of denial. There is no administrative reconsideration available for petition denials.

(f) If the Administrator determines that the petition clearly demonstrates that the vehicle model is eligible for

importation, (s)he grants it and notifies the petitioner. (S)he also publishes in the FEDERAL REGISTER a notice of grant and the reasons for it.

[54 FR 40099, Sept. 29, 1989, as amended at 55 FR 37330, Sept. 11, 1990]

§ 593.8 Determinations on the agency's initiative.

(a) The Administrator may make a determination of eligibility on his or her own initiative. The agency publishes in the FEDERAL REGISTER, affording opportunity for comment, a notice containing the information available to the agency (other than confidential information) relevant to the basis upon which eligibility may be determined.

(b) No public hearing, argument, or other formal proceeding is held upon a notice published under this section.

(c) The Administrator publishes a second notice in the FEDERAL REGISTER in which (s)he announces his or her determination whether the vehicle is eligible or ineligible for importation, and states the reasons for the determination. A notice of ineligibility also announces that no further determination for the same model of motor vehicle will be made for at least 3 months following the date of publication of the notice. There is no administrative reconsideration available for a decision of ineligibility.

§ 593.9 Effect of affirmative determinations; lists.

(a) A notice of grant is sufficient authority for the importation by persons other than the petitioner of any vehicle of the same model specified in the grant.

(b) The Administrator publishes annually in the FEDERAL REGISTER a list of determinations made under Sec. 593.7, and Sec. 593.8.

§ 593.10 Availability for public inspection.

(a) Except as specified in paragraph (b) of this section, information relevant to a determination under this part, including a petition and supporting data, and the grant or denial of the petition or the making of a determination on the Administrator's initiative, is available for public inspection in the Docket Section, Room 5109, National Highway Traffic Safety Administration, 400 Seventh St., SW., Washington, DC 20590. Copies of available information may be obtained, as provided in part 7 of this chapter.

(b) Except for release of confidential information authorized under part 512 of this chapter, information made available for inspection under paragraph (a) of this section does not include information for which confidentiality has been requested and granted in accordance with part 512 of this chapter, and 5 U.S.C. 552(b). To the extent that a petition contains material relating to the methodology by which the petitioner intends to achieve conformance with a specific standard, the petitioner may request confidential treatment of such material on the grounds that it contains a trade secret or confidential information in accordance with part 512 of this chapter.

APPENDIX A TO PART 593—LIST OF VEHICLES DETERMINED TO BE ELIGIBLE FOR IMPORTATION

(a) Each vehicle on the following list is preceded by a vehicle eligibility number. The importer of a vehicle admissible under any eligibility decision must enter that number on the HS–7 Declaration Form accompanying entry to indicate that the vehicle is eligible for importation.

(1) ''VSA'' eligibility numbers are assigned to all vehicles that are decided to be eligible for importation on the initiative of the Administrator under § 593.8.

(2) ''VSP'' eligibility numbers are assigned to vehicles that are decided to be eligible under § 593.7(f), based on a petition from a manufacturer or registered importer submitted under § 593.5(a)(1), which establishes that a substantially similar U.S.-certified vehicle exists.

(3) ''VCP'' eligibility numbers are assigned to vehicles that are decided to be eligible under § 593.7(f), based on a petition from a manufacturer or registered importer submitted under § 593.5(a)(2), which establishes that the vehicle has safety features that comply with, or are capable of being altered to comply with, all applicable FMVSS.

(b) Vehicles for which eligibility decisions have been made are listed alphabetically, first by make and then by model.

(c) All hyphens used in the Model Year column mean ''through'' (for example, ''1988–1990'' means ''1988 through 1990'').

(d) The initials ''MC'' used in the Make column mean ''Motorcycle.''

(e) The initials ''SWB'' used in the Model Type column mean ''Short Wheel Base.''

(f) The initials ''LWB'' used in the Model Type column mean ''Long Wheel Base.''

(g) For vehicles with a European country of origin, the term ''Model Year'' ordinarily means calendar year in which the vehicle was produced.

(h) All vehicles are left-hand-drive (LHD) vehicles unless noted as RHD. The initials ''RHD'' used in the Model Type column mean ''Right-Hand-Drive.''

VEHICLES CERTIFIED BY THEIR ORIGINAL MANUFACTURER AS COMPLYING WITH ALL APPLICABLE CANADIAN MOTOR VEHICLE SAFETY STANDARDS

VSA–80	(a) All passenger cars less than 25 years old that were manufactured before September 1, 1989;
	(b) All passenger cars manufactured on or after September 1, 1989, and before September 1, 1996, that, as originally manufactured, are equipped with an automatic restraint system that complies with Federal Motor Vehicle Safety Standard (FMVSS) No. 208;
	(c) All passenger cars manufactured on or after September 1, 1996, and before September 1, 2002, that, as originally manufactured, are equipped with an automatic restraint system that complies with FMVSS No. 208, and that comply with FMVSS No. 214;
	(d) All passenger cars manufactured on or after September 1, 2002, and before September 1, 2007, that, as originally manufactured, are equipped with an automatic restraint system that complies with FMVSS No. 208, and that comply with FMVSS Nos. 201, 214, 225, and 401;
	(e) All passenger cars manufactured on or after September 1, 2007, and before September 1, 2008, that, as originally manufactured, comply with FMVSS Nos. 110, 118, 138, 201, 208, 213, 214, 225, and 401;
	(f) All passenger cars manufactured on or after September 1, 2008 and before September 1, 2011 that, as originally manufactured, comply with FMVSS Nos. 110, 118, 138, 201, 202a, 206, 208, 213, 214, 225, and 401;
	(g) All passenger cars manufactured on or after September 1, 2011 and before September 1, 2012 that, as originally manufactured, comply with FMVSS Nos. 110, 118, 126, 138, 201, 202a, 206, 208, 213, 214, 225, and 401.
VSA–81	(a) All multipurpose passenger vehicles, trucks, and buses with a GVWR of 4,536 kg (10,000 lb) or less that are less than 25 years old and that were manufactured before September 1, 1991;
	(b) All multipurpose passenger vehicles, trucks, and buses with a GVWR of 4,536 kg (10,000 lb) or less that were manufactured on and after September 1, 1991, and before September 1, 1993 and that, as originally manufactured, comply with FMVSS Nos. 202 and 208;
VSA–81	(c) All multipurpose passenger vehicles, trucks, and buses with a GVWR of 4,536 kg (10,000 lb) or less that were manufactured on or after September 1, 1993, and before September 1, 1998, and that, as originally manufactured, comply with FMVSS Nos. 202, 208, and 216;
	(d) All multipurpose passenger vehicles, trucks, and buses with a GVWR of 4,536 kg (10,000 lb) or less that were manufactured on or after September 1, 1998, and before September 1, 2002, and that, as originally manufactured, comply with FMVSS Nos. 202, 208, 214, and 216;
	(e) All multipurpose passenger vehicles, trucks, and buses with a GVWR of 4,536 kg (10,000 lb) or less that were manufactured on or after September 1, 2002, and before September 1, 2007, and that, as originally manufactured, comply with FMVSS Nos. 201, 202, 208, 214, and 216, and, insofar as it is applicable, with FMVSS No. 225;
	(f) All multipurpose passenger vehicles, trucks, and buses with a GVWR of 4,536 kg (10,000 lb) or less manufactured on or after September 1, 2007 and before September 1, 2008, that, as originally manufactured, comply with FMVSS Nos. 110, 118, 201, 202, 208, 213, 214, and 216, and insofar as they are applicable, with FMVSS Nos. 138 and 225;

VEHICLES CERTIFIED BY THEIR ORIGINAL MANUFACTURER AS COMPLYING WITH ALL APPLICABLE CANADIAN MOTOR VEHICLE SAFETY STANDARDS—Continued

	(g) All multipurpose passenger vehicles, trucks, and buses with a GVWR of 4,536 kg (10,000 lb) or less manufactured on or after September 1, 2008 and before September 1, 2011, that, as originally manufactured, comply with FMVSS Nos. 110, 118, 201, 202a, 206, 208, 213, 214, and 216, and insofar as they are applicable, with FMVSS Nos. 138 and 225;
	(h) All multipurpose passenger vehicles, trucks, and buses with a GVWR of 4,536 kg (10,000 lb) or less manufactured on or after September 1, 2011 and before September 1, 2012, that, as originally manufactured, comply with FMVSS Nos. 110, 118, 126, 201, 202a, 206, 208, 213, 214, and 216, and insofar as they are applicable, with FMVSS Nos. 138 and 225.
VSA–82	All multipurpose passenger vehicles, trucks, and buses with a GVWR greater than 4,536 kg (10,000 lb) that are less than 25 years old.
VSA–83	All trailers and motorcycles less than 25 years old.

VEHICLES MANUFACTURED FOR OTHER THAN THE CANADIAN MARKET

Make	Model type(s)	Body	Model year(s)	VSP	VSA	VCP
Acura	Legend		1988	51		
Acura	Legend		1988	51		
Acura	Legend		1989	77		
Acura	Legend		1990–1992	305		
AL–Spaw	EMA Mobile Stage Trailer		2009			42
Alfa Romeo	164		1989	196		
Alfa Romeo	164		1991	76		
Alfa Romeo	164		1994	156		
Alfa Romeo	Spider		1987	70		
Alfa Romeo	Spyder		1992	503		
Alpina	B12 5.0	Sedan	1988–1994			41
Aston Martin	Vanquish		2002–2004	430		
Audi	80		1988–1989	223		
Audi	100		1989	93		
Audi	100		1993	244		
Audi	100		1990–1992	317		
Audi	A4		1996–2000	352		
Audi	A4, RS4, S4	8D	2000–2001	400		
Audi	A6		1998–1999	332		
Audi	A8		2000	424		
Audi	A8		1997–2000	337		
Audi	A8 Avant Quattro		1996	238		
Audi	RS6 & RS6 Avant		2003	443		
Audi	S6		1996	428		
Audi	S8		2000	424		
Audi	TT		2000–2001	364		
Bentley	Arnage (manufactured 1/1/01–12/31/01)		2001	473		
Bentley	Azure (LHD & RHD)		1998	485		
Bimota (MC)	DB4		2000	397		
Bimota (MC)	SB8		1999–2000	397		
Bimota (MC)	SB6		1994–1999	523		
BMW	316		1986	25		
BMW	3 Series		1998	462		
BMW	3 Series		1999	379		
BMW	3 Series		2000	356		
BMW	3 Series		2001	379		
BMW	3 Series		1995–1997	248		
BMW	3 Series		2003–2004	487		
BMW	318i, 318iA		1986		23	
BMW	318i, 318iA		1987–1989		23	
BMW	320i		1990–1991	283		
BMW	325, 325i, 325iA, 325E		1986		30	
BMW	325e, 325eA		1986–1987		24	
BMW	325i		1991	96		
BMW	325i		1992–1996	197		
BMW	325i, 325iA		1987–1989		30	
BMW	325iS, 325iSA		1987–1989		31	
BMW	325iX		1990	205		
BMW	325iX, 325iXA		1988–1989		33	
BMW	5 Series		2000	345		

VEHICLES MANUFACTURED FOR OTHER THAN THE CANADIAN MARKET—Continued

Make	Model type(s)	Body	Model year(s)	VSP	VSA	VCP
BMW	5 Series		1990–1995	194		
BMW	5 Series		1995–1997	249		
BMW	5 Series		1998–1999	314		
BMW	5 Series		2000–2002	414		
BMW	5 Series		2003–2004	450		
BMW	518i		1986	4		
BMW	520iA		1989	9		
BMW	524tdA		1986		26	
BMW	525i		1989	5		
BMW	528e, 528eA		1986–1988		21	
BMW	535i, 535iA		1986–1989		25	
BMW	635CSi, 635CSiA		1986–1989		27	
BMW	7 Series		1992	232		
BMW	7 Series		1990–1991	299		
BMW	7 Series		1993–1994	299		
BMW	7 Series		1995–1999	313		
BMW	7 Series		1999–2001	366		
BMW	728i		1986	14		
BMW	730iA		1988	6		
BMW	735i, 735iA		1986–1989		28	
BMW	745i		1986		73	
BMW	8 Series		1991–1995	361		
BMW	850 Series		1997	396		
BMW	850i		1990	10		
BMW	All other passenger car models except those in the M1 and Z1 series..		1986–1989		78	
BMW	L7		1986–1987		29	
BMW	M3		1988–1989		35	
BMW	M3 (manufactured prior to 9/1/06)		2006	520		
BMW	M5		1988		34	
BMW	M6		1987–1988		32	
BMW	X5 (manufactured 1/1/03–12/31/04)		2003–2004	459		
BMW	Z3		1996–1998	260		
BMW	Z3 (European market)		1999	483		
BMW	Z8		2002	406		
BMW	Z8		2000–2001	350		
BMW (MC)	C1		2000–2003			40
BMW (MC)	K1		1990–1993	228		
BMW (MC)	K100		1986–1992	285		
BMW (MC)	K1100, K1200		1993–1998	303		
BMW (MC)	K75		1996			36
BMW (MC)	K75S		1987–1995	229		
BMW (MC)	R1100		1994–1997	231		
BMW (MC)	R1100		1998–2001	368		
BMW (MC)	R1100RS		1994	177		
BMW (MC)	R1150GS		2000	453		
BMW (MC)	R1200C		1998–2001	359		
BMW (MC)	R80, R100		1986–1995	295		
Buell (MC)	All Models		1995–2002	399		
Cadillac	DeVille		1994–1999	300		
Cadillac	DeVille (manufactured 8/1/99–12/31/00)		2000	448		
Cadillac	Seville		1991	375		
Cagiva (MC)	Gran Canyon 900		1999	444		
Carrocerias	Cimarron trailer		2006–2007			37
Chevrolet	400SS		1995	150		
Chevrolet	Astro Van		1997	298		
Chevrolet	Blazer		1986	405		
Chevrolet	Blazer (plant code of "K" or "2" in the 11th position of the VIN).		1997	349		
Chevrolet	Blazer (plant code of "K" or "2" in the 11th position of the VIN).		2001	461		
Chevrolet	Camaro		1999	435		
Chevrolet	Cavalier		1997	369		
Chevrolet	Corvette		1992	365		
Chevrolet	Corvette	Coupe	1999	419		
Chevrolet	Suburban		1989–1991	242		
Chevrolet	Tahoe		2000	504		
Chevrolet	Tahoe		2001	501		
Chevrolet	Trailblazer (manufactured prior to 9/1/07) originally sold in the Kuwaiti market.		2007	514		
Chrysler	Daytona		1992	344		

VEHICLES MANUFACTURED FOR OTHER THAN THE CANADIAN MARKET—Continued

Make	Model type(s)	Body	Model year(s)	VSP	VSA	VCP
Chrysler	Grand Voyager		1998	373		
Chrysler	LHS (Mexican market)		1996	276		
Chrysler	Shadow (Middle Eastern market)		1989	216		
Chrysler	Town and Country		1993	273		
Citroen	XM		1990–1992			1
Dodge	Ram		1994–1995	135		
Ducati (MC)	748		1999–2003	421		
Ducati (MC)	851		1988	498		
Ducati (MC)	888		1993	500		
Ducati (MC)	900		2001	452		
Ducati (MC)	916		1999–2003	421		
Ducati (MC)	600SS		1992–1996	241		
Ducati (MC)	748 Biposto		1996–1997	220		
Ducati (MC)	900SS		1991–1996	201		
Ducati (MC)	996 Biposto		1999–2001	475		
Ducati (MC)	996R		2001–2002	398		
Ducati (MC)	MH900E		2001–2002	524		
Ducati (MC)	Monster 600		2001	407		
Ducati (MC)	ST4S		1999–2005	474		
Eagle	Vision		1994	323		
Ferrari	360		2001	376		
Ferrari	456		1995	256		
Ferrari	550		2001	377		
Ferrari	575		2002–2003	415		
Ferrari	575		2004–2005	507		
Ferrari	208, 208 Turbo	all models	1986–1988		76	
Ferrari	328	all models	1988–1989		37	
Ferrari	328 GTS		1986–1987		37	
Ferrari	348 TB		1992	86		
Ferrari	348 TS		1992	161		
Ferrari	360 (manufactured after 9/31/02)		2002	433		
Ferrari	360 (manufactured before 9/1/02)		2002	402		
Ferrari	360 Modena		1999–2000	327		
Ferrari	360 Series		2004	446		
Ferrari	360	Spider & Coupe	2003	410		
Ferrari	456 GT & GTA		1999	445		
Ferrari	456 GT & GTA		1997–1998	408		
Ferrari	512 TR		1993	173		
Ferrari	550 Marinello		1997–1999	292		
Ferrari	599 (manufactured prior to 9/1/06)		2006	518		
Ferrari	Enzo		2003–2004	436		
Ferrari	F355		1995	259		
Ferrari	F355		1999	391		
Ferrari	F355		1996–1998	355		
Ferrari	F430 (manufactured prior to 9/1/06)		2005–2006	479		
Ferrari	F50		1995	226		
Ferrari	Mondial (all models)		1986–1989		74	
Ferrari	Testarossa		1989		39	
Ferrari	Testarossa		1987–1988		39	
Ford	Bronco (manufactured in Venezuela)		1995–1996	265		
Ford	Escort (Nicaraguan market)		1996	322		
Ford	Escort RS Cosworth		1994–1995			9
Ford	Explorer (manufactured in Venezuela)		1991–1998	268		
Ford	F150		2000	425		
Ford	Mustang		1993	367		
Ford	Mustang		1997	471		
Ford	Windstar		1995–1998	250		
Freightliner	FLD12064ST		1991–1996	179		
Freightliner	FTLD112064SD		1991–1996	178		
GMC	Suburban		1992–1994	134		
Harley Davidson (MC).	FX, FL, XL Series		1998	253		
Harley Davidson (MC).	FX, FL, XL Series		1999	281		
Harley Davidson (MC).	FX, FL, XL Series		2000	321		
Harley Davidson (MC).	FX, FL, XL Series		2001	362		
Harley Davidson (MC).	FX, FL, XL Series		2002	372		
Harley Davidson (MC).	FX, FL, XL Series		2003	393		

VEHICLES MANUFACTURED FOR OTHER THAN THE CANADIAN MARKET—Continued

Make	Model type(s)	Body	Model year(s)	VSP	VSA	VCP
Harley Davidson (MC).	FX, FL, XL Series		2004	422		
Harley Davidson (MC).	FX, FL, XL Series		2005	472		
Harley Davidson (MC).	FX, FL, XL Series		2006	491		
Harley Davidson (MC).	FX, FL, XL Series		1986–1997	202		
Harley Davidson (MC).	FX, FL, XL & VR Series		2007	506		
Harley Davidson (MC).	FXSTC Soft Tail Custom		2007	499		
Harley Davidson (MC).	FX, FL, XL & VR Series		2008	517		
Harley Davidson (MC).	FX, FL, XL & VR Series		2009	522		
Harley Davidson (MC).	VRSCA		2002	374		
Harley Davidson (MC).	VRSCA		2003	394		
Harley Davidson (MC).	VRSCA		2004	422		
Hatty	45 ft double axle trailer		1999–2000			38
Heku	750 KG boat trailer		2005			33
Hobby	Exclusive 650 KMFE Trailer		2002–2003			29
Honda	Accord		1991	280		
Honda	Accord		1992–1999	319		
Honda	Accord (RHD)	Sedan & Wagon	1994–1997	451		
Honda	Civic DX	Hatchback	1989	128		
Honda	CRV		2002	447		
Honda	CR–V		2005	489		
Honda	Prelude		1989	191		
Honda	Prelude		1994–1997	309		
Honda (MC)	CB 750 (CB750F2T)		1996	440		
Honda (MC)	CB1000F		1988	106		
Honda (MC)	CBR250		1989–1994			22
Honda (MC)	CMX250C		1986–1987	348		
Honda (MC)	CP450SC		1986	174		
Honda (MC)	RVF 400		1994–2000	358		
Honda (MC)	VF750		1994–1998	290		
Honda (MC)	VFR 400		1994–2000	358		
Honda (MC)	VFR 400, RVF 400		1989–1993			24
Honda (MC)	VFR750		1990	34		
Honda (MC)	VFR750		1991–1997	315		
Honda (MC)	VFR800		1998–1999	315		
Honda (MC)	VT600		1991–1998	294		
Hyundai	Elantra		1992–1995	269		
Hyundai	XG350		2004	494		
Jaguar	Sovereign		1993	78		
Jaguar	S–Type		2000–2002	411		
Jaguar	XJ6		1987	47		
Jaguar	XJ6		1986		41	
Jaguar	XJ6 Sovereign		1988	215		
Jaguar	XJS		1991	175		
Jaguar	XJS		1992	129		
Jaguar	XJS		1986–1987		40	
Jaguar	XJS		1994–1996	195		
Jaguar	XJS, XJ6		1988–1990	336		
Jaguar	XK–8		1998	330		
Jeep	Cherokee		1993	254		
Jeep	Cherokee (European market)		1991	211		
Jeep	Cherokee (LHD & RHD)		1994	493		
Jeep	Cherokee (LHD & RHD)		1995	180		
Jeep	Cherokee (LHD & RHD)		1996	493		
Jeep	Cherokee (LHD & RHD)		1997–1998	516		
Jeep	Cherokee (LHD & RHD)		1997–2001	515		
Jeep	Cherokee (Venezuelan market)		1992	164		
Jeep	Grand Cherokee		1994	404		
Jeep	Grand Cherokee		1997	431		
Jeep	Grand Cherokee		2001	382		
Jeep	Grand Cherokee (LHD—Japanese market).		1997	389		

VEHICLES MANUFACTURED FOR OTHER THAN THE CANADIAN MARKET—Continued

Make	Model type(s)	Body	Model year(s)	VSP	VSA	VCP
Jeep	Liberty		2002	466		
Jeep	Liberty		2005	505		
Jeep	Liberty (Mexican market)		2004	457		
Jeep	Wrangler		1993	217		
Jeep	Wrangler		1995	255		
Jeep	Wrangler		1998	341		
Kawasaki (MC)	EL250		1992–1994	233		
Kawasaki (MC)	VN1500–P1/P2 series		2003	492		
Kawasaki (MC)	ZX1000–B1		1988	182		
Kawasaki (MC)	ZX400		1987–1997	222		
Kawasaki (MC)	ZX6, ZX7, ZX9, ZX10, ZX11		1987–1999	312		
Kawasaki (MC)	ZX600		1986–1998	288		
Kawasaki (MC)	ZZR1100		1993–1998	247		
Ken-Mex	T800		1990–1996	187		
Kenworth	T800		1992	115		
Komet	Standard, Classic & Eurolite trailer		2000–2005	477		
KTM (MC)	Duke II		1995–2000	363		
Lamborghini	Diablo (except 1997 Coupe)		1996–1997	416		
Lamborghini	Diablo	Coupe	1997			26
Lamborghini	Gallardo (manufactured 1/1/04–12/31/04).		2004	458		
Lamborghini	Gallardo (manufactured 1/1/06–8/31/06)		2006	508		
Lamborghini	Murcielago	Roadster	2005	476		
Land Rover	Defender 110		1993	212		
Land Rover	Defender 90	VIN & Body Limited	1994–1995	512		
Land Rover	Defender 90 (manufactured before 9/1/97) and VIN "SALDV224*VA" or "SALDV324*VA".		1997	432		
Land Rover	Discovery		1994–1998	338		
Land Rover	Discovery (II)		2000	437		
Land Rover	Range Rover		2004	509		
Lexus	GS300		1998	460		
Lexus	GS300		1993–1996	293		
Lexus	RX300		1998–1999	307		
Lexus	SC300		1991–1996	225		
Lexus	SC400		1991–1996	225		
Lincoln	Mark VII		1992	144		
Magni (MC)	Australia, Sfida		1996–1999	264		
Mazda	MPV		2000	413		
Mazda	MX–5 Miata		1990–1993	184		
Mazda	RX–7		1986	199		
Mazda	RX–7		1987–1995	279		
Mazda	Xedos 9		1995–2000	351		
Mercedes Benz	190 D	201.126	1986–1989		54	
Mercedes Benz	190 D (2.2)	201.122	1986–1989		54	
Mercedes Benz	190 E	201.029	1986		54	
Mercedes Benz	190 E	201.028	1990	22		
Mercedes Benz	190 E	201.036	1990	104		
Mercedes Benz	190 E	201.024	1991	45		
Mercedes Benz	190 E	201.028	1992	71		
Mercedes Benz	190 E	201.018	1992	126		
Mercedes Benz	190 E		1993	454		
Mercedes Benz	190 E	201.028	1986–1989		54	
Mercedes Benz	190 E (2.3)	201.024	1986–1989		54	
Mercedes Benz	190 E (2.6)	201.029	1987–1989		54	
Mercedes Benz	190 E (2.6) 16	201.034	1986–1989		54	
Mercedes Benz	200 D	124.120	1986	17		
Mercedes Benz	200 E	124.021	1989	11		
Mercedes Benz	200 E	124.012	1991	109		
Mercedes Benz	200 E	124.019	1993	75		
Mercedes Benz	200 TE	124.081	1989	3		
Mercedes Benz	220 E		1993	168		
Mercedes Benz	220 TE	Station Wagon	1993–1996	167		
Mercedes Benz	230 CE	124.043	1991	84		
Mercedes Benz	230 CE	123.043	1992	203		
Mercedes Benz	230 E	124.023	1988	1		
Mercedes Benz	230 E	124.023	1989	20		
Mercedes Benz	230 E	124.023	1990	19		
Mercedes Benz	230 E	124.023	1991	74		
Mercedes Benz	230 E	124.023	1993	127		
Mercedes Benz	230 E	124.023	1986–1987		55	
Mercedes Benz	230 TE	124.083	1989	2		

VEHICLES MANUFACTURED FOR OTHER THAN THE CANADIAN MARKET—Continued

Make	Model type(s)	Body	Model year(s)	VSP	VSA	VCP
Mercedes Benz	250 D		1992	172		
Mercedes Benz	250 E		1990–1993	245		
Mercedes Benz	260 E	124.026	1986		55	
Mercedes Benz	260 E	124.026	1992	105		
Mercedes Benz	260 E	124.026	1987–1989		55	
Mercedes Benz	260 SE	126.020	1986	18		
Mercedes Benz	260 SE	126.020	1989	28		
Mercedes Benz	280 E		1993	166		
Mercedes Benz	280 SE	116.024	1986–1988		51	
Mercedes Benz	300 CE	124.051	1990	64		
Mercedes Benz	300 CE	124.051	1991	83		
Mercedes Benz	300 CE	124.050	1992	117		
Mercedes Benz	300 CE	124.061	1993	94		
Mercedes Benz	300 CE	124.050	1988–1989		55	
Mercedes Benz	300 D	124.130	1986		55	
Mercedes Benz	300 D Turbo	124.193	1986		55	
Mercedes Benz	300 D Turbo	124.193	1987–1989		55	
Mercedes Benz	300 DT	124.133	1986–1989		55	
Mercedes Benz	300 E	124.031	1992	114		
Mercedes Benz	300 E	124.030	1986–1989		55	
Mercedes Benz	300 E 4–Matic		1990–1993	192		
Mercedes Benz	300 SD	126.120	1986–1989		53	
Mercedes Benz	300 SE	126.024	1990	68		
Mercedes Benz	300 SE	126.024	1986–1987		53	
Mercedes Benz	300 SE	126.024	1988–1989		53	
Mercedes Benz	300 SEL	126.025	1986		53	
Mercedes Benz	300 SEL	126.025	1987		53	
Mercedes Benz	300 SEL	126.025	1990	21		
Mercedes Benz	300 SEL	126.025	1988–1989		53	
Mercedes Benz	300 SL	107.041	1989	7		
Mercedes Benz	300 SL	129.006	1992	54		
Mercedes Benz	300 SL	107.041	1986–1988		44	
Mercedes Benz	300 TE	124.090	1990	40		
Mercedes Benz	300 TE		1992	193		
Mercedes Benz	300 TE	124.090	1986–1989		55	
Mercedes Benz	320 CE		1993	310		
Mercedes Benz	320 SL		1992–1993	142		
Mercedes Benz	380 SE	126.043	1986–1989		53	
Mercedes Benz	380 SE	126.032	1986–1989		53	
Mercedes Benz	380 SEL	126.033	1986–1989		53	
Mercedes Benz	380 SL	107.045	1986–1989		44	
Mercedes Benz	380 SLC	107.025	1986–1989		44	
Mercedes Benz	400 SE		1992–1994	296		
Mercedes Benz	420 E		1993	169		
Mercedes Benz	420 SE	126.034	1986		53	
Mercedes Benz	420 SE	126.034	1987–1989		53	
Mercedes Benz	420 SE		1990–1991	230		
Mercedes Benz	420 SEC		1990	209		
Mercedes Benz	420 SEL	126.035	1990	48		
Mercedes Benz	420 SEL	126.035	1986–1989		53	
Mercedes Benz	420 SL	107.047	1986		44	
Mercedes Benz	450 SEL	116.033	1986–1988		51	
Mercedes Benz	450 SEL (6.9)	116.036	1986–1988		51	
Mercedes Benz	450 SL	107.044	1986–1989		44	
Mercedes Benz	450 SLC	107.024	1986–1989		44	
Mercedes Benz	500 E	124.036	1991	56		
Mercedes Benz	500 SE	126.036	1988	35		
Mercedes Benz	500 SE		1990	154		
Mercedes Benz	500 SE	140.050	1991	26		
Mercedes Benz	500 SE	126.036	1986		53	
Mercedes Benz	500 SEC	126.044	1990	66		
Mercedes Benz	500 SEC	126.044	1986–1989		53	
Mercedes Benz	500 SEL		1990	153		
Mercedes Benz	500 SEL	126.037	1991	63		
Mercedes Benz	500 SEL	126.037	1986–1989		53	
Mercedes Benz	500 SL	129.066	1989	23		
Mercedes Benz	500 SL	126.066	1991	33		
Mercedes Benz	500 SL	129.006	1992	60		
Mercedes Benz	500 SL	107.046	1986–1989		44	
Mercedes Benz	560 SEC	126.045	1990	141		
Mercedes Benz	560 SEC		1991	333		
Mercedes Benz	560 SEC	126.045	1986–1989		53	

VEHICLES MANUFACTURED FOR OTHER THAN THE CANADIAN MARKET—Continued

Make	Model type(s)	Body	Model year(s)	VSP	VSA	VCP
Mercedes Benz	560 SEL	126.039	1990	89		
Mercedes Benz	560 SEL	140	1991	469		
Mercedes Benz	560 SEL	126.039	1986–1989		53	
Mercedes Benz	560 SL	107.048	1986–1989		44	
Mercedes Benz	600 SEC	Coupe	1993	185		
Mercedes Benz	600 SEL	140.057	1993–1998	271		
Mercedes Benz	600 SL	129.076	1992	121		
Mercedes Benz	All other passenger car models except Model ID 114 and 115 with sales designations ''long,'' ''station wagon,'' or ''ambulance''.		1986–1989		77	
Mercedes Benz	C 320	203	2001–2002	441		
Mercedes Benz	C Class		1994–1999	331		
Mercedes Benz	C Class	203	2000–2001	456		
Mercedes Benz	C Class	221	2003–2006	521		
Mercedes Benz	CL 500		1998	277		
Mercedes Benz	CL 500		1999–2001	370		
Mercedes Benz	CL 600		1999–2001	370		
Mercedes Benz	CLK 320		1998	357		
Mercedes Benz	CLK Class		1999–2001	380		
Mercedes Benz	CLK–Class	209	2002–2005	478		
Mercedes Benz	E 200		1994	207		
Mercedes Benz	E 200		1995–1998	278		
Mercedes Benz	E 220		1994–1996	168		
Mercedes Benz	E 250		1994–1995	245		
Mercedes Benz	E 280		1994–1996	166		
Mercedes Benz	E 320		1994–1998	240		
Mercedes Benz	E 320	211	2002–2003	418		
Mercedes Benz	E 320	Station Wagon	1994–1999	318		
Mercedes Benz	E 420		1994–1996	169		
Mercedes Benz	E 500		1994	163		
Mercedes Benz	E 500		1995–1997	304		
Mercedes Benz	E Class	W210	1996–2002	401		
Mercedes Benz	E Class	211	2003–2004	429		
Mercedes Benz	E Series		1991–1995	354		
Mercedes Benz	G-Wagon	463	1996			11
Mercedes Benz	G-Wagon	463	1997			15
Mercedes Benz	G-Wagon	463	1998			16
Mercedes Benz	G-Wagon	463	1999–2000			18
Mercedes Benz	G-Wagon 300	463.228	1993			3
Mercedes Benz	G-Wagon 300	463.228	1994			5
Mercedes Benz	G-Wagon 300	463.228	1990–1992			5
Mercedes Benz	G-Wagon 320 LWB	463	1995			6
Mercedes Benz	G-Wagon 5 DR LWB	463	2001			21
Mercedes Benz	G-Wagon 5 DR LWB	463	2002	392		
Mercedes Benz	G-Wagon 5 DR LWB		2006–2007	527		
Mercedes Benz	G-Wagon LWB V–8	463	1992–1996			13
Mercedes Benz	G-Wagon SWB	463	2005			31
Mercedes Benz	G-Wagon SWB	463	1990–1996			14
Mercedes Benz	G-Wagon SWB Cabriolet & 3DR	463	2004			28
Mercedes Benz	G-Wagon SWB Cabriolet & 3DR	463	2001–2003			25
Mercedes Benz	G-Wagon SWB Cabriolet & 3DR (manufactured before 9/1/06).	463	2006			35
Mercedes Benz	Maybach		2004	486		
Mercedes Benz	S 280	140.028	1994	85		
Mercedes Benz	S 320		1994–1998	236		
Mercedes Benz	S 420		1994–1997	267		
Mercedes Benz	S 500		1994–1997	235		
Mercedes Benz	S 500		2000–2001	371		
Mercedes Benz	S 600		1995–1999	297		
Mercedes Benz	S 600		2000–2001	371		
Mercedes Benz	S 600	Coupe	1994	185		
Mercedes Benz	S 600L		1994	214		
Mercedes Benz	S Class		1993	395		
Mercedes Benz	S Class	140	1991–1994	423		
Mercedes Benz	S Class		1995–1998	342		
Mercedes Benz	S Class		1998–1999	325		
Mercedes Benz	S Class	W220	1999–2002	387		
Mercedes Benz	S Class	220	2002–2004	442		
Mercedes Benz	S Class (manufactured before 9/1/06)		2005–2006	525		
Mercedes Benz	SE Class		1992–1994	343		
Mercedes Benz	SEL Class	140	1992–1994	343		

VEHICLES MANUFACTURED FOR OTHER THAN THE CANADIAN MARKET—Continued

Make	Model type(s)	Body	Model year(s)	VSP	VSA	VCP
Mercedes Benz	SL Class		1993–1996	329		
Mercedes Benz	SL Class	W129	1997–2000	386		
Mercedes Benz	SL Class	R230	2001–2002			19
Mercedes Benz	SL-Class (European market)	230	2003–2005	470		
Mercedes Benz	SLK		1997–1998	257		
Mercedes Benz	SLK		2000–2001	381		
Mercedes Benz	SLK Class (manufactured between 8/31/04 and 8/31/06).	171	2005–2006	511		
Mercedes Benz (truck).	Sprinter		2001–2005	468		
Mini	Cooper (European market)	Convertible	2005	482		
Mitsubishi	Galant Super Salon		1989	13		
Mitsubishi	Galant VX		1988	8		
Moto Guzzi (MC)	California		2000–2001	495		
Moto Guzzi (MC)	California EV		2002	403		
Moto Guzzi (MC)	Daytona		1993	118		
Moto Guzzi (MC)	Daytona RS		1996–1999	264		
MV Agusta (MC)	F4		2000	420		
Nissan	240SX		1988	162		
Nissan	GTS & GTR(RHD) a.k.a. ''Skyline'' manufactured 1/96–6/98.	R33	1996–1998			32
Nissan	Maxima		1989	138		
Nissan	Pathfinder		2002	412		
Nissan	Pathfinder		1987–1995	316		
Nissan	Stanza		1987	139		
Peugeot	405		1989	65		
Plymouth	Voyager		1996	353		
Pontiac	Firebird Trans Am		1995	481		
Pontiac (MPV)	Trans Sport		1993	189		
Porsche	911 Series		1991	526		
Porsche	911		1997–2000	346		
Porsche	928		1991–1996	266		
Porsche	928		1993–1998	272		
Porsche	911 Carrera	996	2002–2004	439		
Porsche	911 (996) GT3		2004	438		
Porsche	911 C4		1990	29		
Porsche	911 Cabriolet		1986–1989		56	
Porsche	911 Carrera		1993	165		
Porsche	911 Carrera		1994	103		
Porsche	911 Carrera		1986–1989		56	
Porsche	911 Carrera		1995–1996	165		
Porsche	911 Carrera 2 & Carrera 4		1992	52		
Porsche	911 Carrera Cabriolet (manufactured prior to 9/1/06).		2005–2006	513		
Porsche	911	Coupe	1986–1989		56	
Porsche	911 Targa		1986–1989		56	
Porsche	911 Turbo		1992	125		
Porsche	911 Turbo		2001	347		
Porsche	911 Turbo		1986–1989		56	
Porsche	924	Coupe	1986–1989		59	
Porsche	924 S		1987–1989		59	
Porsche	924 Turbo	Coupe	1986–1989		59	
Porsche	928	Coupe	1986–1989		60	
Porsche	928 GT		1986–1989		60	
Porsche	928 S	Coupe	1986–1989		60	
Porsche	928 S4		1990	210		
Porsche	928 S4		1986–1989		60	
Porsche	944	Coupe	1986–1989		61	
Porsche	944 S	Cabriolet	1990	97		
Porsche	944 S	Coupe	1987–1989		61	
Porsche	944 S2 (2-door Hatchback)		1990	152		
Porsche	944 Turbo	Coupe	1986–1989		61	
Porsche	946 Turbo		1994	116		
Porsche	All other passenger car models except Model 959.		1986–1989		79	
Porsche	Boxster		1997–2001	390		
Porsche	Boxster (manufactured before 9/1/02)		2002	390		
Porsche	Carrera GT		2004–2005	463		
Porsche	Cayenne		2003–2004	464		
Porsche	Cayenne (manufactured prior to 9/1/06)		2006	519		
Porsche	GT2		2001			20
Porsche	GT2		2002	388		

VEHICLES MANUFACTURED FOR OTHER THAN THE CANADIAN MARKET—Continued

Make	Model type(s)	Body	Model year(s)	VSP	VSA	VCP
Rolls Royce	Bentley		1987–1989	340		
Rolls Royce	Bentley Brooklands		1993	186		
Rolls Royce	Bentley Continental R		1990–1993	258		
Rolls Royce	Bentley Turbo		1986	53		
Rolls Royce	Bentley Turbo R		1995	243		
Rolls Royce	Bentley Turbo R		1992–1993	291		
Rolls Royce	Phantom		2004	455		
Saab	9.3		2003	426		
Saab	9000		1988	59		
Saab	9000		1994	334		
Saab	900 S		1987–1989	270		
Saab	900 SE		1995	213		
Saab	900 SE		1990–1994	219		
Saab	900 SE		1996–1997	219		
Smart Car	Fortwo (incl. trim levels passion, pulse, & pure).	Coupe & Cabriolet	2005			30
Smart Car	Fortwo (incl. trim levels passion, pulse, & pure).	Coupe & Cabriolet	2002–2004			27
Smart Car	Fortwo (incl. trim levels passion, pulse, & pure) manufactured before 9/1/06.	Coupe & Cabriolet	2006			34
Smart Car	Fortwo (incl. trim levels passion, pulse, & pure) manufactured before 9/1/06.	Coupe & Cabriolet	2007			39
Subaru	Forester		2006–2007	510		
Suzuki (MC)	GSF 750		1996–1998	287		
Suzuki (MC)	GSX1300R a.k.a. ''Hayabusa''		1999–2006	484		
Suzuki (MC)	GSX–R 1100		1986–1997	227		
Suzuki (MC)	GSX–R 750		1986–1998	275		
Suzuki (MC)	GSX–R 750		1999–2003	417		
Toyota	4-Runner		1998	449		
Toyota	Avalon		1995–1998	308		
Toyota	Camry		1989	39		
Toyota	Camry		1987–1988		63	
Toyota	Celica		1987–1988		64	
Toyota	Corolla		1987–1988		65	
Toyota	Land Cruiser		1989	101		
Toyota	Land Cruiser		1986–1988	252		
Toyota	Land Cruiser		1990–1996	218		
Toyota	MR2		1990–1991	324		
Toyota	Previa		1991–1992	326		
Toyota	Previa		1993–1997	302		
Toyota	RAV4		1996	328		
Toyota	RAV4		2005	480		
Toyota	Van		1987–1988	200		
Triumph (MC)	Thunderbird		1995–1999	311		
Vespa (MC)	ET2, ET4		2001–2002	378		
Vespa (MC)	LX and PX		2004–2005	496		
Volkswagen	Eurovan		1993–1994	306		
Volkswagen	Golf		1987	159		
Volkswagen	Golf		1988	80		
Volkswagen	Golf		2005	502		
Volkswagen	Golf III		1993	92		
Volkswagen	Golf Rallye		1988	73		
Volkswagen	Golf Rallye		1989	467		
Volkswagen	GTI (Canadian market)		1991	149		
Volkswagen	Jetta		1994–1996	274		
Volkswagen	Passat	Wagon & Sedan	2004	488		
Volkswagen	Passat 4-door	Sedan	1992	148		
Volkswagen	Scirocco		1986	42		
Volkswagen	Transporter		1990	251		
Volkswagen	Transporter		1986–1987	490		
Volkswagen	Transporter		1988–1989	284		
Volvo	740 GL		1992	137		
Volvo	740	Sedan	1988	87		
Volvo	850 Turbo		1995–1998	286		
Volvo	940 GL		1992	137		
Volvo	940 GL		1993	95		
Volvo	945 GL	Wagon	1994	132		
Volvo	960	Sedan & Wagon	1994	176		
Volvo	C70		2000	434		
Volvo	S70		1998–2000	335		
Yamaha (MC)	Drag Star 1100		1999–2007	497		
Yamaha (MC)	FJ1200 (4 CR)		1991	113		

VEHICLES MANUFACTURED FOR OTHER THAN THE CANADIAN MARKET—Continued

Make	Model type(s)	Body	Model year(s)	VSP	VSA	VCP
Yamaha (MC)	FJR1300		2002			23
Yamaha (MC)	R1		2000	360		
Yamaha (MC)	Virago		1990–1998	301		

[75 FR 57398, Sept. 21, 2010]

PART 594—SCHEDULE OF FEES AUTHORIZED BY 49 U.S.C. 30141

Sec.

594.1 Scope.
594.2 Purpose.
594.3 Applicability.
594.4 Definitions.
594.5 Establishment and payment of fees.
594.6 Annual fee for administration of the registration program.
594.7 Fee for filing petitions for a determination whether a vehicle is eligible for importation.
594.8 Fee for importing a vehicle pursuant to a determination by the Administrator.
594.9 Fee for reimbursement of bond processing costs and costs for processing offers of cash deposits or obligations of the United States in lieu of sureties on bonds.
594.10 Fee for review and processing of conformity certificate.

AUTHORITY: 49 U.S.C. 30141, 31 U.S.C. 9701; delegation of authority at 49 CFR 1.50.

SOURCE: 54 FR 40107, Sept. 29, 1989, unless otherwise noted.

§ 594.1 Scope.

This part establishes the fees authorized by 49 U.S.C. 30141.

[61 FR 51045, Sept. 30, 1996]

§ 594.2 Purpose.

The purposes of this part is to ensure that NHTSA is reimbursed for costs incurred in administering the importer registration program, in making determinations whether a nonconforming vehicle is eligible for importation into the United States, and in processing the bond furnished to the Secretary of the Treasury given to ensure that an imported vehicle not originally manufactured to conform to all applicable Federal motor vehicle safety standards is brought into compliance with the safety standards, or will be exported, or abandoned to the United States.

§ 594.3 Applicability.

This part applies to any person who applies to NHTSA to be granted the status of Registered Importer under part 592 of this chapter, to any person who has been granted such status, to any manufacturer not a Registered Importer who petitions the Administrator for a determination pursuant to part 593 of this chapter, and to any person who imports a motor vehicle into the United States pursuant to such determination.

[55 FR 40667, Oct. 4, 1990]

§ 594.4 Definitions.

All terms used in this part that are defined in 49 U.S.C. 30102 are used as defined in that section.

Administrator means the Administrator of the National Highway Traffic Safety Administration.

NHTSA means the National Highway Traffic Safety Administration.

Registered Importer means any person who has been granted the status of registered importer under part 592 of this chapter, and whose registration has not been revoked.

[54 FR 40107, Sept. 29, 1989, as amended at 61 FR 51045, Sept. 30, 1996]

§ 594.5 Establishment and payment of fees.

(a) The fees established by this part continue in effect until adjusted by the Administrator. The Administrator reviews the amount or rate of fees established under this part and, if appropriate, adjusts them by rule at least every 2 years.

(b) The fees applicable in any fiscal year are established before the beginning of such year. Each fee is calculated in accordance with this part, and is published in the FEDERAL REGISTER not later than September 30 of each year.

(c) An applicant for status as Registered Importer shall submit an initial

annual fee with the application. A Registered Importer shall pay an annual fee not later than October 31 of each year. The fee is that specified in § 594.6(i).

(d) A person who petitions the Administrator for a determination that a vehicle is eligible for importation shall file with the petition the fee specified in § 594.7(e).

(e) No application or petition will be accepted for filing or processed before payment of the full amount specified. Except as provided in § 594.6(d), a fee shall be paid irrespective of NHTSA's disposition of the application, or of a withdrawal of an application.

(f) The Administrator will furnish each Registered Importer with a monthly invoice of the fees owed by the Registered Importer for reimbursement for bond processing costs and for the review and processing of conformity certificates and information regarding importation of motor vehicles as provided in Section 592.4 of this chapter. A person who for personal use imports a vehicle covered by a determination of the Administrator must pay the fee specified in either § 594.8(b) or (c), as appropriate, to the Registered Importer, and the invoice will also include these fees. The Registered Importer must pay the fees within 15 days of the date of the invoice.

(g) Fee payments must be by certified check, cashier's check, money order, credit card, or Electronic Funds Transfer System, made payable to the Treasurer of the United States.

[54 FR 40107, Sept. 29, 1989, as amended at 55 FR 40667, Oct. 4, 1990; 62 FR 50882, Sept. 29, 1997; 69 FR 52100, Aug. 24, 2004]

§ 594.6 Annual fee for administration of the registration program.

(a) Each person filing an application to be granted the status of a Registered Importer pursuant to part 592 of this chapter on or after October 1, 2010, must pay an annual fee of $795, as calculated below, based upon the direct and indirect costs attributable to:

(1) Processing and acting upon such application;

(2) Any inspection deemed required for a determination upon such application;

(3) The estimated remaining activities of administering the registration program in the fiscal year in which such application is intended to become effective.

(b) That portion of the initial annual fee attributable to the processing of the application for applications filed on and after October 1, 2010, is $320. The sum of $320, representing this portion, shall not be refundable if the application is denied or withdrawn.

(c) If, in order to make a determination upon an application, NHTSA must make an inspection of the applicant's facilities, NHTSA notifies the applicant in writing after the conclusion of any such inspection, that a supplement to the initial annual fee in a stated amount is due upon receipt of such notice to recover the direct and indirect costs associated with such inspection and notification, and that no determination will be made upon the application until such sum is received. Such sum is not refundable if the application is denied or withdrawn.

(d) That portion of the initial annual fee attributable to the remaining activities of administering the registration program on and after October 1, 2010, is set forth in paragraph (i) of this section. This portion shall be refundable if the application is denied, or withdrawn before final action upon it.

(e) Each Registered Importer who wishes to maintain the status of Registered Importer shall pay a regular annual fee based upon the direct and indirect costs of administering the registration program, including the suspension and reinstatement, and revocation of such registration.

(f) The elements of administering the registration program that are included in the regular annual fee are:

(1) Calculating, revising, and publishing the fees to apply in the next fiscal year, including such coordination as may be required with the U.S. Customs Service.

(2) Processing and reviewing the annual statement attesting to the fact that no material change has occurred in the Registered Importer's status since filing its original application.

(3) Processing the annual fee.

(4) Processing and reviewing any amendments to an annual statement received in the course of a fiscal year.

(5) Verifying through inspection or otherwise that a Registered Importer is complying with the requirements of Sec. 592.6(b)(3) of this chapter for recordkeeping.

(6) Verifying through inspection or otherwise that a Registered Importer is able technically and financially to carry out its responsibilities pursuant to 49 U.S.C. 30118 *et seq*.

(7) Invoking procedures for suspension of registration and its reinstatement, and for revocation of registration pursuant to Sec. 592.7 of this chapter.

(g) The direct costs included in establishing the annual fee for maintaining registered importer status are the estimated costs of professional and clerical staff time, computer and computer operator time, and postage, per Registered Importer. The direct costs included in establishing the annual fee for a specific Registered Importer are costs of transportation and *per diem* attributable to inspections conducted with respect to that Registered Importer in administering the registration program, which have not been included in a previous annual fee.

(h) The indirect costs included in establishing the annual fee for maintaining Registered Importer status are a pro rata allocation of the average salary and benefits of persons employed in processing annual statements, or changes thereto, in recommending continuation of Registered Importer status, and a pro rata allocation of the costs attributable to maintaining the office space, and the computer or word processor. This cost is $20.67 per manhour for the period beginning October 1, 2010.

(i) Based upon the elements and indirect costs of paragraphs (f), (g), and (h) of this section, the component of the initial annual fee attributable to administration of the registration program, covering the period beginning October 1, 2010, is $475. When added to the costs of registration of $320, as set forth in paragraph (b) of this section, the costs per applicant to be recovered through the annual fee are $795. The annual renewal registration fee for the period beginning October 1, 2010, is $670.

[54 FR 40107, Sept. 29, 1989; 55 FR 78, Jan. 2, 1990, as amended at 55 FR 40667, Oct. 4, 1990; 56 FR 49429, Sept. 30, 1991; 58 FR 51023, Sept. 30, 1993; 61 FR 51045, Sept. 30, 1996; 63 FR 45185, Aug. 25, 1998; 65 FR 56500, Sept. 19, 2000; 67 FR 60599, Sept. 26, 2002; 67 FR 62897, Oct. 9, 2002; 69 FR 57873, Sept. 28, 2004; 71 FR 43989, Aug. 3, 2006; 73 FR 54986, Sept. 24, 2008; 75 FR 48612, Aug. 11, 2010]

§ 594.7 Fee for filing petitions for a determination whether a vehicle is eligible for importation.

(a) Each manufacturer or registered importer who petitions NHTSA for a determination that—

(1) A nonconforming vehicle is substantially similar to a vehicle originally manufactured for importation into and sale in the United States and of the same model year as the model for which petition is made, and is capable of being readily modified to conform to all applicable Federal motor vehicle safety standards, or

(2) A nonconforming vehicle has safety features that comply with or are capable of being modified to comply with all applicable Federal motor vehicle safety standards,

shall pay a fee based upon the direct and indirect costs of processing and acting upon such petition.

(b) The direct costs attributable to processing a petition filed pursuant to paragraph (a) of this section include the average cost per professional staff-hour, computer and computer operator time, and postage. The direct costs also include those attributable to any inspection of a vehicle requested by a petitioner in substantiation of its petition.

(c) The indirect costs attributable to processing and acting upon a petition filed pursuant to paragraph (a) of this section include a pro rata allocation of the average salary and benefits of persons employed in processing the petitions and recommending decisions on them, and a pro rata allocation of the costs attributable to maintaining the office space, and the computer or word processor.

(d) The direct costs attributable to acting upon a petition filed pursuant to paragraph (a) of this section, also include the cost of publishing a notice in

the FEDERAL REGISTER seeking public comment, the cost of publishing a second notice with the agency's determination, and a pro rata share of the cost of publishing an annual list of nonconforming vehicles determined to be eligible for importation.

(e) For petitions filed on and after October 1, 2010, the fee payable for seeking a determination under paragraph (a)(1) of this section is $175. The fee payable for a petition seeking a determination under paragraph (a)(2) of this section is $800. If the petitioner requests an inspection of a vehicle, the sum of $827 shall be added to such fee. No portion of this fee is refundable if the petition is withdrawn or denied.

(f) In adopting a fee for the next fiscal year, the Administrator employs data based upon the cost of determinations and the amount of fees received for the 12-month period ending June 30 of the fiscal year preceding that fiscal year.

[54 FR 40107, Sept. 29, 1989, as amended at 55 FR 40667, Oct. 4, 1990; 56 FR 49429, Sept. 30, 1991; 58 FR 51023, Sept. 30, 1993; 61 FR 51045, Sept. 30, 1996; 65 FR 56500, Sept. 19, 2000; 67 FR 60599, Sept. 26, 2002; 69 FR 57873, Sept. 28, 2004; 71 FR 43990, Aug. 3, 2006; 73 FR 54986, Sept. 24, 2008; 75 FR 48613, Aug. 11, 2010]

§ 594.8 Fee for importing a vehicle pursuant to a determination by the Administrator.

(a) A fee as specified in paragraphs (b) and (c) of this section shall be paid by each importer of a vehicle covered by a determination made under part 593 of this chapter to cover the direct and indirect costs incurred by NHTSA in making such determinations.

(b) If a determination has been made pursuant to a petition, the fee for each vehicle is $158. The direct and indirect costs that determine the fee are those set forth in § 594.7(b), (c), and (d).

(c) If a determination has been made on or after October 1, 2010, pursuant to the Administrator's initiative, the fee for each vehicle is $125. The direct and indirect costs that determine the fee are those set forth in §§ 594.7(b), (c), and (d), and references to ''petition'' shall be understood as relating to NHTSA's documents that serve as a basis for initiating determinations on its own initiative.

[55 FR 40667, Oct. 4, 1990, as amended at 58 FR 51023, Sept. 30, 1993; 61 FR 51045, Sept. 30, 1996; 63 FR 45186, Aug. 25, 1998; 65 FR 56500, Sept. 19, 2000; 67 FR 60599, Sept. 26, 2002; 69 FR 57874, Sept. 28, 2004; 71 FR 43990, Aug. 3, 2006; 73 FR 54986, Sept. 24, 2008; 75 FR 48613, Aug. 11, 2010]

§ 594.9 Fee for reimbursement of bond processing costs and costs for processing offers of cash deposits or obligations of the United States in lieu of sureties on bonds.

(a) Each Registered Importer must pay a fee based upon the direct and indirect costs of processing each bond furnished to the Secretary of Homeland Security on behalf of the Administrator with respect to each vehicle for which it furnishes a certificate of conformity pursuant to § 592.6(d) of this chapter.

(b) The direct and indirect costs attributable to processing a bond are provided to NHTSA by the U.S. Customs Service.

(c) The bond processing fee for each vehicle imported on and after October 1, 2010, for which a certificate of conformity is furnished, is $9.93.

(d) Each importer must pay a fee based upon the direct and indirect costs the agency incurs for receipt, processing, handling, and disbursement of cash deposits or obligations of the United States in lieu of sureties on bonds that the importer submits as authorized by § 591.10 of this chapter in lieu of a conformance bond required under § 591.6(c) of this chapter.

(e) The fee for each vehicle imported on and after October 1, 2010, for which cash deposits or obligations of the United States are furnished in lieu of a conformance bond, is $514.

[54 FR 40107, Sept. 29, 1989, as amended at 56 FR 49429, Sept. 30, 1991; 58 FR 51023, Sept. 30, 1993; 61 FR 51045, Sept. 30, 1996; 63 FR 45186, Aug. 25, 1998; 65 FR 56500, Sept. 19, 2000; 67 FR 60599, Sept. 26, 2002; 69 FR 52100, Aug. 24, 2004; 69 FR 57874, Sept. 28, 2004; 71 FR 43990, Aug. 3, 2006; 73 FR 39896, July 11, 2008; 75 FR 48613, Aug. 11, 2010]

§ 594.10 Fee for review and processing of conformity certificate.

(a) Each registered importer shall pay a fee based on the agency's direct

and indirect costs for the review and processing of each certificate of conformity furnished to the Administrator pursuant to § 591.7(e) of this chapter.

(b) The direct costs attributable to the review and processing of a certificate of conformity include the estimated cost of contract and professional staff time, computer usage, and record assembly, marking, shipment and storage costs.

(c) The indirect costs attributable to the review and processing of a certificate of conformity include a pro rata allocation of the average benefits of persons employed in reviewing and processing the certificates, and a pro rata allocation of the costs attributable to the rental and maintenance of office space and equipment, the use of office supplies, and other overhead items.

(d) The review and processing fee for each certificate of conformity submitted on and after October 1, 2010 is $17. However, if the vehicle covered by the certificate has been entered electronically with the U.S. Department of Homeland Security through the Automated Broker Interface and the registered importer submitting the certificate has an e-mail address, the fee for the certificate is $6, provided that the fee is paid by a credit card issued to the registered importer. If NHTSA finds that the information in the entry or the certificate is incorrect, requiring further processing, the processing fee shall be $57.

[62 FR 50882, Sept. 29, 1997, as amended at 63 FR 45186, Aug. 25, 1998; 65 FR 56500, Sept. 19, 2000; 67 FR 60599, Sept. 26, 2002; 69 FR 57874, Sept. 28, 2004; 71 FR 43990, Aug. 3, 2006; 73 FR 54986, Sept. 24, 2008; 75 FR 48613, Aug. 11, 2010]

PART 595—MAKE INOPERATIVE EXEMPTIONS

Subpart A—General

Sec.
595.1 Scope.
595.2 Purpose.
595.3 Applicability.
595.4 Definitions.

Subpart B—Retrofit On-Off Switches for Air Bags

595.5 Requirements.

Subpart C—Vehicle Modifications To Accommodate People With Disabilities

595.6 Modifier identification.
595.7 Requirements for vehicle modifications to accommodate people with disabilities.

APPENDIX A TO PART 595—INFORMATION BROCHURE.
APPENDIX B TO PART 595—REQUEST FORM.
APPENDIX C TO PART 595—INSTALLATION OF AIR BAG ON-OFF SWITCHES.

AUTHORITY: 49 U.S.C. 322, 30111, 30115, 30117, 30122 and 30166; delegation of authority at 49 CFR 1.50.

SOURCE: 62 FR 62442, Nov. 21, 1997, unless otherwise noted.

Subpart A—General

§ 595.1 Scope.

This part establishes conditions under which the compliance of motor vehicles and motor vehicle equipment with the Federal motor vehicle safety standards may be made inoperative.

[66 FR 12655, Feb. 27, 2001]

§ 595.2 Purpose.

The purpose of this part is to provide an exemption from the ''make inoperative'' provision of 49 U.S.C. 30122 that permits motor vehicle dealers and motor vehicle repair businesses to install retrofit air bag on-off switches and to otherwise modify motor vehicles to enable people with disabilities to operate or ride as a passenger in a motor vehicle.

[66 FR 12655, Feb. 27, 2001]

§ 595.3 Applicability.

This part applies to dealers and motor vehicle repair businesses.

§ 595.4 Definitions.

The term *dealer*, defined in 49 U.S.C. 30102(a), is used in accordance with its statutory meaning.

The term *motor vehicle repair business* is defined in 49 U.S.C. 30122(a) as ''a person holding itself out to the public to repair for compensation a motor vehicle or motor vehicle equipment.'' This term includes businesses that receive compensation for servicing vehicles without malfunctioning or broken parts or systems by adding or removing features or components to or from

those vehicles or otherwise customizing those vehicles.

Subpart B—Retrofit On-Off Switches for Air Bags

§ 595.5 Requirements.

(a) Beginning January 19, 1998, a dealer or motor vehicle repair business may modify a motor vehicle manufactured before September 1, 2012 by installing an on-off switch that allows an occupant of the vehicle to turn off an air bag in that vehicle, subject to the conditions in paragraphs (b)(1) through (5) of this section.

(b)(1) The dealer or motor vehicle repair business receives from the owner or lessee of the motor vehicle a letter from the National Highway Traffic Safety Administration that authorizes the installation of an on-off switch in that vehicle for that air bag and includes a form to be filled in by the dealer or motor vehicle repair business with information identifying itself and describing the installation it makes.

(2) The dealer or motor vehicle repair business installs the on-off switch in accordance with the instructions of the manufacturer of the switch.

(3) The on-off switch meets all of the conditions specified in paragraphs (b)(3)(i) and (ii) of this section.

(i) The on-off switch is operable solely by a key or a key-like object. The on-off switch shall be separate from the ignition switch for the vehicle, so that the driver must take some action other than inserting the ignition key or turning the ignition key in the ignition switch to turn off the air bag. Once turned off, the air bag shall remain off until it is turned back on by means of the device. If a single on-off switch is installed for both air bags, the on-off switch shall allow each air bag to be turned off without turning off the other air bag. The readiness indicator required by S4.5.2 of § 571.208 of this chapter shall continue to monitor the readiness of the air bags even when one or both air bags has been turned off. The readiness indicator light shall not be illuminated solely because an air bag has been deactivated by means of an on-off switch.

(ii) A telltale light in the interior of the vehicle shall be illuminated whenever the driver or passenger air bag is turned off by means of the on-off switch. The telltale for a driver air bag shall be clearly visible to an occupant of the driver's seating position. The telltale for a passenger air bag shall be clearly visible to occupants of all front seating positions. The telltale for an air bag:

(A) Shall be yellow;

(B) Shall have the identifying words ''DRIVER AIR BAG OFF'', ''PASSENGER AIR BAG OFF'', or ''PASS AIR BAG OFF'', as appropriate, on the telltale or within 25 millimeters of the telltale;

(C) Shall remain illuminated for the entire time that the air bag is ''off;''

(D) Shall not be illuminated at any time when the air bag is ''on;'' and,

(E) Shall not be combined with the readiness indicator required by S4.5.2 of § 571.208 of this chapter.

(4) The dealer or motor vehicle repair business provides the owner or lessee with an insert for the vehicle owner's manual that—

(i) Describes the operation of the on-off switch,

(ii) Lists the risk groups on the request form set forth in appendix B of this Part,

(iii) States that an on-off switch should only be used to turn off an air bag for a member of one of those risk groups, and

(iv) States the safety consequences for using the on-off switch to turn off an air bag for persons who are not members of any of those risk groups. The description of those consequences includes information, specific to the make, model and model year of the owner's or lessee's vehicle, about any seat belt energy managing features, e.g., load limiters, that will affect seat belt performance when the air bag is turned off.

(5) In the form included in the agency authorization letter specified in paragraph (b)(1) of this section, the dealer or motor vehicle repair business fills in information describing itself and the on-off switch installation(s) it makes in the motor vehicle. The dealer or motor vehicle repair business then sends the form to the address below within 7 working days after the completion of the described installations:

National Highway Traffic Safety Administration, Attention: Air Bag Switch Request Forms, 400 Seventh Street, S.W., Washington, D.C. 20590–1000.

[62 FR 62442, Nov. 21, 1997; 62 FR 67754, Dec. 30, 1997, as amended at 65 FR 30770, May 12, 2000; 69 FR 31034, June 2, 2004]

Subpart C—Vehicle Modifications To Accommodate People With Disabilities

SOURCE: 66 FR 12655, Feb. 27, 2001, unless otherwise noted.

§ 595.6 Modifier identification.

(a) Any motor vehicle repair business that modifies a motor vehicle to enable a person with a disability to operate, or ride as a passenger in, the motor vehicle and intends to avail itself of the exemption provided in 49 CFR 595.7 shall furnish the information specified in paragraphs (a)(1) through (3) of this section to: Administrator, National Highway Traffic Safety Administration, 1200 New Jersey Avenue, SE., Washington, DC 20590.

(1) Full individual, partnership, or corporate name of the motor vehicle repair business.

(2) Residence address of the motor vehicle repair business and State of incorporation if applicable.

(3) A statement that the motor vehicle repair business modifies a motor vehicle to enable a person with a disability to operate, or ride as a passenger in, the motor vehicle and intends to avail itself of the exemption provided in 49 CFR 595.7.

(b) Each motor business repair business required to submit information under paragraph (a) of this section shall submit the information not later than August 27, 2001. After that date, each motor business repair business that modifies a motor vehicle to enable a person with a disability to operate, or ride as a passenger in, the motor vehicle and intends to avail itself of the exemption provided in 49 CFR 595.7 shall submit the information required under paragraph (a) not later than 30 days after it first modifies a motor vehicle to enable a person with a disability to operate, or ride as a passenger in, the motor vehicle. Each motor vehicle repair business who has submitted required information shall keep its entry current, accurate and complete by submitting revised information not later than 30 days after the relevant changes in the business occur.

[66 FR 12655, Feb. 27, 2001, as amended at 75 FR 47489, Aug. 6, 2010]

§ 595.7 Requirements for vehicle modifications to accommodate people with disabilities.

(a) Any motor vehicle repair business that modifies a motor vehicle to enable a person with a disability to operate, or ride as a passenger in, the motor vehicle is exempted from the ''make inoperative'' prohibition of 49 U.S.C. 30122 to the extent that those modifications affect the motor vehicle's compliance with the Federal motor vehicle safety standards or portions thereof specified in paragraph (c) of this section. Modifications that would take a vehicle out of compliance with any other Federal motor vehicle safety standards, or portions thereof, are not covered by this exemption.

(b) Any motor vehicle repair business that modifies a motor vehicle to enable a person with a disability to operate, or ride as a passenger in, the motor vehicle in such a manner as to make inoperative any part of a device or element of design installed on or in the motor vehicle in compliance with a Federal motor vehicle safety standard or portion thereof specified in paragraph (c) of this section must affix to the motor vehicle a permanent label of the type and in the manner described in paragraph (d) of this section and must provide and retain a document of the type and in the manner described in paragraph (e) of this section.

(c)(1) 49 CFR 571.101, except for S5.2.1, S5.3.1, S5.3.4, S5.4.1, and S5.4.3 of that section.

(2) S5.1.1.5 of 49 CFR 571.108, in the case of a motor vehicle that is modified to be driven without a steering wheel or for which it is not feasible to retain the turn signal canceling device installed by the vehicle manufacturer.

(3) S5.1.2 and S5.1.3 of 49 CFR 571.114, in any case in which the original key locking system must be modified.

(4) S4(a) of 49 CFR 571.118, in any case in which the medical condition of the person for whom the vehicle is modified necessitates the installation of a remote ignition switch to start the vehicle.

(5) S5.1 and S5.2.1 of 49 CFR 571.123, in any case in which the modification necessitates the relocation of original equipment manufacturer's controls.

(6) S5.3.1 of 49 CFR 571.135, in any case in which the modification necessitates the removal of the original equipment manufacturer foot pedal.

(7) 49 CFR 571.201 with respect to:

(i) Targets located on the right side rail, the right B-pillar and the first right side ''other'' pillar adjacent to the stowed platform of a lift or ramp that stows vertically, inside the vehicle.

(ii) Targets located on the left side rail, the left B-pillar and the first left side ''other'' pillar adjacent to the stowed platform of a lift or ramp that stows vertically, inside the vehicle.

(iii) Targets located on the rear header and the rearmost pillars adjacent to the stowed platform of a lift or ramp that stows vertically, inside the vehicle.

(iv) Targets located on any hand grip or vertical stanchion bar.

(v) All of S6 of 571.201 in any case in which the disability necessitates raising the roof or door, or lowering the floor of the vehicle.

(8) 49 CFR 571.202, in any case in which:

(i) A motor vehicle is modified to be operated by a driver seated in a wheelchair and no other seat is supplied with the vehicle for the driver;

(ii) A motor vehicle is modified to transport a right front passenger seated in a wheelchair and no other right front passenger seat is supplied with the vehicle; or

(9) S4.3(b)(1) and (2) of 49 CFR 571.202, in any case in which the driver's head restraint must be modified to accommodate a driver with a disability.

(10) S5.1 of 49 CFR 571.203, in any case in which the modification necessitates a structural change to, or removal of, the original equipment manufacturer steering shaft.

(11) S5.2 of 49 CFR 571.203, in any case in which an item of adaptive equipment must be mounted on the steering wheel.

(12) 49 CFR 571.204, in any case in which the modification necessitates a structural change to, or removal of, the original equipment manufacturer steering shaft.

(13) S4.1 of 49 CFR 571.207, in any case in which a vehicle is modified to be driven by a person seated in a wheelchair and no other driver's seat is supplied with the vehicle, provided that a wheelchair securement device is installed at the driver's position.

(14) S4.1.5.1(a)(1), S4.1.5.1(a)(3), S4.2.6.2, S5, S7.1, S7.2, S7.4, S14, S15, S16, S17, S18, S19, S20, S21, S22, S23, S24, S25, S26 and S27 of 49 CFR 571.208 for the designated seating position modified, provided Type 2 or Type 2A seat belts meeting the requirements of 49 CFR 571.209 and 571.210 are installed at that position.

(15) S5 of 49 CFR 571.214 for the designated seating position modified, in any cases in which the restraint system and/or seat at that position must be changed to accommodate a person with a disability.

(16) 49 CFR 571.225 in any case in which an existing child restraint anchorage system, or built-in child restraint system relied upon for compliance with 571.225 must be removed to accommodate a person with a disability, provided the vehicle contains at least one tether anchorage which complies with 49 CFR 571.225 S6, S7 and S8 in one of the rear passenger designated seating positions. If no rear designated seating position exists after the vehicle modification, a tether anchorage complying with the requirements described above must be located at a front passenger seat. Any tether anchorage attached to a seat that is relocated shall continue to comply with the requirements of 49 CFR 571.225 S6, S7 and S8.

(d) The label required by paragraph (b) of this section shall:

(1) Be permanently affixed to the vehicle,

(2) Be located adjacent to the original certification label or the alterer's certification label, if applicable,

(3) Give the modifier's name and physical address,

(4) Contain the statement ''This vehicle has been modified in accordance with 49 CFR 595.6 and may no longer comply with all Federal Motor Vehicle Safety Standards in effect at the time of its original manufacture.''

(e) The document required by paragraph (b) of this section shall:

(1) Be provided, in original or photocopied form, to the owner of the vehicle at the time the vehicle is delivered to the owner,

(2) Be kept, in original or photocopied form, at the same address provided on the label described in paragraph (c) of this section for a period not less than five years after the vehicle, as modified, is delivered to the individual for whom the modifications were performed,

(3) Be clearly identifiable as to the vehicle that has been modified,

(4) Contain a list of the Federal motor vehicle safety standards or portions thereof specified in paragraph (c) of this section with which the vehicle may no longer be in compliance.

(5) Indicate any reduction in the load carrying capacity of the vehicle of more than 100 kg (220 lb) after the modifications are completed. In providing this information, the modifier must state whether the weight of a user's wheelchair is included in the available load capacity.

[66 FR 12655, Feb. 27, 2001, as amended at 69 FR 21069, Apr. 20, 2004; 70 FR 51678, Aug. 31, 2005; 75 FR 47489, Aug. 6, 2010]

APPENDIX A TO PART 595--INFORMATION BROCHURE

U. S. DEPARTMENT OF TRANSPORTATION
NATIONAL HIGHWAY TRAFFIC SAFETY ADMINISTRATION

AIR BAGS AND ON-OFF SWITCHES
INFORMATION FOR AN INFORMED DECISION

Keeping the Benefits for the Many
and
Reducing the Risks for the Few

INTRODUCTION

Air bags are proven, effective safety devices. From their introduction in the late 1980's through November 1, 1997, air bags saved about 2,620 people. The number of people saved increases each year as air bags become more common on America's roads.

However, the number of lives saved is not the whole story. Air bags are particularly effective in preventing life-threatening and debilitating head and chest injuries. A study of real-world crashes conducted by the National Highway Traffic Safety Administration (NHTSA) found that the combination of seat belts and air bags is 75 percent effective in preventing serious head injuries and 66 percent effective in preventing serious chest injuries. That means 75 of every 100 people who would have suffered a serious head injury in a crash, and 66 out of 100 people who would have suffered chest injuries, were spared that fate because they wore seat belts and had air bags.

For some people, these life saving and injury-preventing benefits come at the cost of a less severe injury caused by the air bag itself. Most air bag injuries are minor cuts, bruises, or abrasions and are far less serious than the skull fractures and brain injuries that air bags prevent. However, 87 people have been killed by air bags as of November 1, 1997. These deaths are tragic, but rare events -- there have been about 1,800,000 air bag deployments as of that same date.

The one fact that is common to all who died is NOT their height, weight, sex, or age. Rather, it is the fact that they were too close to the air bag when it started to deploy. For some, this occurred because they were sitting too close to the air bag. More often this occurred because they were not restrained by seat belts or child safety seats and were thrown forward during pre-crash braking.

The vast majority of people can avoid being too close and can minimize the risk of serious air bag injury by making simple changes in behavior. Shorter drivers can adjust their seating position. Front seat adult passengers can sit a safe distance from their air bag. Infants and children 12 and under should sit in the back seat. And everyone can buckle up. The limited number of people who may not be able to make these changes may benefit from having the opportunity to turn off their air bags when necessary.

Beginning January 19, 1998, consumers can choose to have an on-off switch installed for the air bags in their vehicle if they are, or a user of their vehicle is, in a risk group listed below. The following information provides the facts you need about air bags so you can make the appropriate decision for you and anyone else who is in a risk group.

What is an on-off switch?
An on-off switch allows an air bag to be turned on and off. The on-off switch can be installed for the driver, passenger, or both. To limit misuse, a key must be used to operate the on-off switch. When the air bag is turned off, a light comes on. There is a message on or near the light saying "DRIVER AIR BAG OFF" or "PASSENGER AIR BAG OFF." The air bag will remain off until the key is used to turn it back on.

What steps can you take to reduce air bag risk without buying an on-off switch?

- **Always place an infant in a rear-facing infant seat in the back seat.**
- **Always transport children 1 to 12 years old in the back seat and use appropriate child restraints.**
- **Always buckle your seat belt.**
- **Keep 10 inches between the center of the air bag cover and your breastbone.**

The vast majority of people don't need an on-off switch. Almost everyone over age 12 is much safer with air bags than without them. This includes short people, tall people, older people, pregnant women -- in fact, all people, male or female, who buckle their seat belts and who can sit far enough back from their air bag. Ideally, you should sit with at least 10 inches between the center of your breastbone and the cover of your air bag. The nearer you can come to achieving the 10-inch distance, the lower your risk of being injured by the air bag and the higher your chance of being saved by the air bag. If you can get back almost 10 inches, the air bag will still help you in a crash.

Who should consider installing an on-off switch?

- People who must transport infants riding in rear-facing infant seats in the front passenger seat.

- People who must transport children ages 1 to 12 in the front passenger seat.

- Drivers who cannot change their customary driving position and keep 10 inches between the center of the steering wheel and the center of their breastbone.

- People whose doctors say that, due to their medical condition, the air bag poses a special risk that outweighs the risk of hitting their head, neck or chest in a crash if the air bag is turned off.

If you cannot certify that you are, or any user of your vehicle is, in one of these groups, you are not eligible for an on-off switch. Turning off your air bag will not benefit you or the other users of your vehicle. Instead, it will increase the risk that you and the other users will suffer a head, neck or chest injury by violently striking the steering wheel or dashboard in a moderate to severe

crash.

WHY SOME PEOPLE ARE AT RISK

How do air bag deaths occur?
Air bags are designed to save lives and prevent injuries by cushioning occupants as they move forward in a front-end crash. By providing a cushion, an air bag keeps the occupant's head, neck, and chest from hitting the steering wheel or dashboard. To perform well, an air bag must deploy quickly. The force is greatest in the first 2-3 inches after the air bag bursts through its cover and begins to inflate. Those 2-3 inches are the "risk zone." The force decreases as the air bag inflates farther.

Occupants who are very close to or on top of the air bag when it begins to inflate can be hit with enough force to suffer serious injury or death. However, occupants who are properly restrained and sit 10 inches away from the air bag cover will contact the air bag only after it has completely or almost completely inflated. The air bag then will cushion and protect them from hitting the hard surfaces in the vehicle.

Do both children and adults face risk?
Yes, both children and adults face the risk of air bag injury or death if they are positioned too close to the air bag or fail to use proper restraints. As of November 1, 1997, NHTSA has confirmed that 49 young children have died, all on the passenger side. 38 adults have died -- 35 drivers and 3 passengers.

What were the specific circumstances of the children's deaths?
Almost all of the 49 children who died were improperly restrained or positioned. 12 were infants under age 1 who were riding in rear-facing infant seats in front of the passenger air bag. When placed in the front seat, a rear-facing infant seat places an infant's head within a very few inches of the passenger air bag. In this position, an infant is almost certain to be injured if the air bag deploys. Rear-facing infant seats must ALWAYS be placed in the back seat.

The other 37 children ranged in age from 1 to 9 years; most were 7 or under. 29 of them were totally unrestrained. This includes 4 children who were sitting on the laps of other occupants. The remaining 8 children included some who were riding with their shoulder belts behind them and some who were wearing lap and shoulder belts but who also should have been in booster seats because of their small size and weight. Booster seat use could have improved shoulder belt fit and performance. These various factors allowed the 37 children to get too close to the air bag when it began to inflate.

What were the specific circumstances of the adults' deaths?
Most of the adults who were killed by air bags were not properly restrained. 18 of the 35 drivers, and 2 of the 3 passengers, were totally unbelted. 2 of the drivers who were belted had medical conditions which caused them to slump over the steering wheel immediately before the crash. A few of the drivers did not use their seat belts correctly and the others are believed to have been sitting too close to the steering wheel.

SEE FOR YOURSELF
Visit the NHTSA Web site at **http://www.nhtsa.dot.gov** and click on the icon "AIR BAGS - Information about air bags." A video shows crash tests of properly belted dummies whose air bags are turned off. A properly belted short female dummy without an air bag is shown slamming her head hard enough to bend the steering wheel and suffer fatal injuries. For more information, call the NHTSA Hotline at 1-800-424-9393.

REDUCING THE RISK

What is the safest way to ride in front of an air bag?
First, move the seat back and buckle up -- every time, every trip. The lap belt needs to fit over your hips, not your abdomen, and the shoulder belt should lie on your chest and over your shoulder. Remove any slack from the belt. In a crash, seat belts stretch and slow down your movement toward the steering wheel or dashboard. Moving back and properly using seat belts give the air bag a chance to inflate before you move forward in a crash far enough to contact the air bag.

How do I best protect children?
Never place a rear-facing infant seat in the front seat if the air bag is turned on. Always secure a rear-facing seat in the back seat. Children age 12 and under should ride in the back seat. While almost all of the children killed by an air bag were 7 years old or younger, a few older children have been killed. Accordingly, age 12 is recommended to provide a margin of safety.

There are instances when children must sit in the front because the vehicle has no rear seat, there are too many children for all to ride in back, or a child has a medical condition that requires monitoring. If children must sit in the front seat, they should use the seat belts and/or child restraint appropriate for their weight or size (see the table at the end of this brochure) and sit against the back of the vehicle seat. The vehicle seat should be moved as far back from the air bag as practical. Make sure the child's shoulder belt stays on. If adult seat belts do not fit properly, use a booster seat. Also, children must never ride on the laps of others.

What should teenagers and adults do to be safest on the passenger side?
Always wear seat belts. This reduces the distance that they can move forward during a crash. Move the seat toward the rear. The distance between a passenger's chest and the dashboard where the air bag is stored is usually more than 10 inches, even with the passenger seat all the way forward. But more distance is safer.

How do I stay safe when I'm driving?
Since the risk zone for driver air bags is the first 2-3 inches of inflation, placing yourself 10 inches from your driver air bag provides you with a clear margin of safety. This distance is measured from the center of the steering wheel to your breastbone. If you now sit less than 10 inches away, you can change your driving position in several ways:

- Move your seat to the rear as far as you can while still reaching the pedals comfortably.

- Slightly recline the back of the seat. Although vehicle designs vary, many drivers can achieve the 10-inch distance, even with the driver seat all the way forward, simply by reclining the back of the seat somewhat. If reclining the back of your seat makes it hard to see the road, raise yourself by using a firm, non-slippery cushion, or raise the seat if your vehicle has that feature.
- If your steering wheel is adjustable, tilt it downward. This points the air bag toward your chest instead of your head and neck.

[In its published version, the brochure will be 10 inches tall and will indicate that it should be placed between your breastbone and the center of the air bag cover to check your distance.]

Will following these safety tips guarantee that I will be safe in a crash?
There is no guarantee of safety in a crash, with or without an air bag. However, most of the people killed by air bags would not have been seriously injured if they had followed these safety tips.

Are air bags the reason the back seat is the safest place for children?
No. The back seat has always been safer, even before there were air bags. NHTSA conducted a study of children who died in crashes in the front and back seats of vehicles, very few of which had passenger air bags. The study concluded that placing children in the back reduces the risk of death in a crash by 27 percent, whether or not a child is restrained.

THE ON-OFF SWITCH DECISION

Vehicle owners and lessees can obtain an on-off switch for one or both of their air bags only if they can certify that they are, or a user of their vehicle is, in one of the four risk groups listed below:

Two risk groups have a high enough risk that they would definitely be better off with an on-off switch:

- **Infants in rear-facing infant seats**. A rear-facing infant seat must never be placed in the front seat unless the air bag is turned off.
- **Drivers or passengers with unusual medical conditions.** These are people who have been advised by a physician that an air bag poses a special risk to them because of their condition. However, they should not turn off their air bag unless their physician also has advised them that this risk is greater than what may happen if they do turn off their air bag. Without an air bag, even belted occupants could hit their head, neck or chest in a crash.

  A national conference of physicians considered all medical conditions commonly cited as possible justifications for turning off air bags. The physicians did not recommend turning off air bags for persons with pacemakers, supplemental oxygen, eyeglasses, median sternotomy, angina, chronic obstructive pulmonary disease, emphysema, asthma, breast reconstruction, mastectomy, scoliosis (if the person can be positioned properly), previous back or neck surgery, previous facial reconstructive surgery or facial injury, hyperacusis, tinnitus, advanced age,

osteogenesis imperfecta, osteoporosis & arthritis (if the person can sit at a safe distance from the air bag), previous ophthalmologic surgery, Down syndrome and atlantoaxial instability (if the person can reliably sit properly aligned), or pregnancy. The physicians recommended turning off an air bag if a safe sitting distance or position cannot be maintained by a driver because of scoliosis or achondroplasia or by a passenger because of scoliosis or Down syndrome and atlantoaxial instability. The physicians also noted that a passenger air bag might have to be turned off if an infant or child has a medical condition and must ride in front so that he or she can be monitored. To obtain a copy of the recommendations, call the NHTSA Hotline or see the NHTSA Web site.

Two other risk groups may be better off with an air bag on-off switch:

- **Children ages 1 to 12.** Children in this age group can be transported safely in the front seat if they are properly belted, they do not lean forward, and their seat is moved all the way back. The vast majority of all fatally injured children in this age range were completely unrestrained. But children sometimes sit or lean far forward and may slip out of their shoulder belts, putting themselves at risk. The simple act of leaning far forward to change the radio station can momentarily place even a belted child in danger. If a vehicle owner must transport a child in the front seat, the owner is eligible for an on-off switch for the passenger air bag. Since air bag performance differs from vehicle model to vehicle model, the vehicle owner may wish to consult the vehicle manufacturer for additional advice.

CAUTION: If you allow children to ride in the front seat while unrestrained or improperly restrained, and especially if you sit with a child on your lap, **you are putting them at serious risk, with or without an air bag**. Turning off the air bag is not the safe answer. It would eliminate air bag risk but not the likelihood that in a crash an unrestrained child would fly through the air and strike the dashboard or windshield, or be crushed by your body.

- **Drivers who cannot get back 10 inches**. Very few drivers are unable to sit so that their breastbone is 10 inches away from their air bag. If, despite your best efforts, you cannot maintain a distance of 10 inches, you may wish to **consult your dealer or vehicle manufacturer for advice or modifications to help you move back.**

  Since the risk zone is the first 2-3 inches from the air bag cover, sitting back 10 inches provides a clear margin of safety. While getting back at least 10 inches is desirable, if you can get back almost 10 inches, the air bag is unlikely to seriously injure you in a crash and you probably don't need an on-off switch. If you cannot get back almost 10 inches from the air bag cover, you may wish to consider an on-off switch. Since air bag performance differs among vehicle models, you may wish to consult your vehicle manufacturer for additional advice.

What if you are, or a user of your vehicle is, not in one of the listed risk groups?
You are not at risk and do not need an on-off switch. This includes short people, tall people, older people, pregnant women -- in fact, all people, male or female over age 12, who buckle their seat belts and who can sit with 10 inches from the center of their breastbone to where the air bag is stored. You will have the full benefit of your air bag and will minimize the risk of violently striking the steering wheel and dashboard in a moderate to severe crash.

How do I get an on-off switch?
If you are eligible, you must fill out a NHTSA request form. Forms are available at state motor vehicle offices and may be available at automobile dealers and repair shops. You may also get one by calling the NHTSA Hotline or visiting the NHTSA Web site. On the form, you must indicate which air bags you want equipped with an on-off switch, certify that you have read this information brochure, certify that you are, or a user of your vehicle is, a member of a risk group listed above, and identify the group. Then send this form to NHTSA. Upon approval of your request, the agency will send you a letter authorizing an automobile dealer or repair shop to install an on-off switch in your vehicle.

Should a pregnant woman get an on-off switch?
No, not unless she is a member of a risk group. Pregnant women should follow the same advice as other adults: buckle up and stay back from the air bag. The lap belt should be positioned low on the abdomen, below the fetus, with the shoulder belt worn normally. Pull any slack out of the belt. Just as for everyone else, the greatest danger to a pregnant woman comes from slamming her head, neck or chest on the steering wheel in a crash. When crashes occur, the fetus can be injured by striking the lower rim of the steering wheel or from crash forces concentrated in the area where a seat belt crosses the mother's abdomen. By helping to restrain the upper chest, the seat belt will keep a pregnant woman as far as possible from the steering wheel. The air bag will spread out the crash forces that would otherwise be concentrated by the seat belt.

ON-OFF SWITCH PRECAUTIONS

If I turn off my air bag for someone at risk, what precautions should I take for others?
Since the air bag will not automatically turn itself back on after you turn it off with an on-off switch, you must remember to turn it on when someone who is not at risk is sitting in that seat. Every on-off switch has a light to remind you when the air bag is turned off.

If I turn off my air bag, will my seat belts provide enough protection?
Air bags increase the protection you can get from seat belts alone. If the air bag is turned off, you lose this extra protection.

In some newer vehicles, turning off your air bag may have additional consequences. These vehicles have seat belts that were specially designed to work together with air bags. If the crash forces become too great, these new seat belts "give" or yield to avoid concentrating too much force on your chest. The air bag prevents you from moving too far forward after the seat belts

give. Without the air bag to cushion this forward movement, the chance of the occupant hitting the vehicle interior is increased.

Ask your vehicle manufacturer whether your seat belts were specially designed to work with an air bag. If they were, your dealer or repair shop will provide you information about the effects that turning off your air bag will have on the performance of the belts. Ask your dealer or repair shop to show you this information before you decide whether to have an on-off switch installed.

HOW AIR BAGS WORK

Air bags are designed to keep your head, neck, and chest from slamming into the dash, steering wheel or windshield in a front-end crash. They are not designed to inflate in rear-end or rollover crashes or in most side crashes. Generally, air bags are designed to deploy in crashes that are equivalent to a vehicle crashing into a solid wall at 8-14 mph. Air bags most often deploy when a vehicle collides with another vehicle or with a solid object like a tree.

Air bags inflate when a sensor detects a front-end crash. The sensor sends an electric signal to start a chemical reaction that inflates the air bag with harmless nitrogen gas. All this happens faster than the blink of an eye. Air bags have vents, so they deflate immediately after cushioning you. They cannot smother you and they don't restrict your movement. The "smoke" you may have seen in a vehicle after an air bag demonstration is the nontoxic starch or talc that is used to lubricate the air bag.

Are all air bags the same?
No. Air bags differ in design and performance. There are differences in the crash speeds that trigger air bag deployment, the speed and force of deployment, the size and shape of air bags, and the manner in which they unfold and inflate. That is why you should contact your vehicle manufacturer if you want specific information about the air bags in your particular car or truck.

FUTURE AIR BAGS

Do I need an on-off switch if I buy a vehicle with depowered air bags?
Many manufacturers are installing depowered air bags beginning with their model year 1998 vehicles. They are called "depowered" because they deploy with less force than current air bags. They will reduce the risk of air bag-related injuries. However, even with depowered air bags, rear-facing child seats still should never be placed in the front seat and children are still safest in the back seat. Contact your vehicle manufacturer for further information.

Will on-off switches be necessary in the future?
Manufacturers are actively developing so-called "smart" or "advanced" air bags that may be able to tailor deployment based on crash severity, occupant size and position, or seat belt use. These bags should eliminate the risks produced by current air bag designs. It is likely that vehicle manufacturers will introduce some form of advanced air bags over the next few years.

WHAT RESTRAINT IS RIGHT FOR YOUR CHILD?

Weight or size of your child	**Proper type of restraint** (Put your child in back seat, if possible)
Children less than 20 pounds,* or less than 1 year	Rear-facing infant seat (*secured to the vehicle by the seat belts*)
Children from about 20 to 40 pounds* and at least 1 year	Forward-facing child seat (*secured to the vehicle by the seat belts*)
Children more than 40 pounds*	Booster seat, plus both portions of a lap/shoulder belt (*except only the lap portion is used with some booster seats equipped with front shield*)
Children who meet both criteria below: (1) Their sitting height is high enough so that they can, without the aid of a booster seat: wear the shoulder belt comfortably across their shoulder, and secure the lap belt across their pelvis, and (2) Their legs are long enough to bend over the front of the seat when their backs are against the vehicle seat back	Both portions of a lap/shoulder belt

* To determine whether a particular restraint is appropriate for your child, see restraint manufacturer's recommendations concerning the weight of children who may safely use the restraint.

APPENDIX B TO PART 595--REQUEST FORM

U. S. DEPARTMENT OF TRANSPORTATION
NATIONAL HIGHWAY TRAFFIC SAFETY ADMINISTRATION

OMB No. 2127-0588
Expiration Date: 11/30/00

REQUEST FOR AIR BAG ON-OFF SWITCH

Vehicle Owner or Lessee Instructions:
Read the National Highway Traffic Safety Administration (NHTSA) information brochure, "Air Bags & On-Off Switches, Information for an Informed Decision." If you want authorization for an on-off switch for your driver air bag, passenger air bag, or both, fill out Parts A, B, E and F completely, fill out Parts C and D as appropriate, and send this form to:

National Highway Traffic Safety Administration
Attention: Air Bag Switch Request Forms
400 Seventh Street, S. W.
Washington, D.C. 20590-1000

- Please print.
- Please note: Incomplete forms will be returned to the owner or lessee.
- If you need a copy of the brochure or have any questions about how to fill out this form, call the NHTSA Hotline at 1-800-424-9393.

Part A. Name and address

(First) (Middle In.) (Last)

Residence: Street address	City	State	Zip Code

Part B. I own or lease the following vehicle: (Owners of multiple vehicles should consult the additional instructions at the end of this form.)

Make	Model
Model year	Vehicle Identification Number (located on driver's side of dashboard near windshield and on certification label on driver's door frame)

APPENDIX B TO PART 595—REQUEST FORM

Part C. Switch for Driver Air Bag. **I request authorization for the installation of an on-off switch for the driver air bag in my vehicle. I certify that I or another driver of my vehicle meets the criteria for the risk group checked below.** **(At least one box must be checked.)**	
☐	**Medical condition.** The driver has a medical condition which, according to his or her physician: • causes the driver air bag to pose a special risk for the driver; and • makes the potential harm from the driver air bag in a crash greater than the potential harm from turning off the air bag and allowing the driver, even if belted, to hit the steering wheel or windshield in a crash.
☐	**Distance from driver air bag.** Despite taking all reasonable steps to move back from the driver air bag, the driver is not able to maintain a 10-inch distance from the center of his or her breastbone to the center of the driver air bag cover.

Part D. Switch for Passenger Air Bag. **I request authorization for the installation of an on-off switch for the passenger air bag in my vehicle. I certify that I or another passenger of my vehicle meets the criteria for the risk group checked below.** **(At least one box must be checked.)**	
☐	**Infant.** An infant (less than 1 year old) must ride in the front seat because: • my vehicle has no rear seat; • my vehicle has a rear seat too small to accommodate a rear-facing infant seat; or • the infant has a medical condition which, according to the infant's physician, makes it necessary for the infant to ride in the front seat so that the driver can constantly monitor the child's condition.
☐	**Child age 1 to 12.** A child age 1 to 12 must ride in the front seat because: • my vehicle has no rear seat; • although children ages 1 to 12 ride in the rear seat(s) whenever possible, children ages 1 to 12 sometimes must ride in the front because no space is available in the rear seat(s) of my vehicle; or • the child has a medical condition which, according to the child's physician, makes it necessary for the child to ride in the front seat so that the driver can constantly monitor the child's condition.
☐	**Medical condition.** A passenger has a medical condition which, according to his or her physician: • causes the passenger air bag to pose a special risk for the passenger; and • makes the potential harm from the passenger air bag in a crash greater than the potential harm from turning off the air bag and allowing the passenger, even if belted, to hit the dashboard or windshield in a crash.

Part E. I make this request based on following certification and understandings:	
(Check each box below after reading carefully.)	
☐	**Information brochure.** I certify that I have read the NHTSA information brochure, "Air Bags & On-Off Switches, Information for an Informed Decision." I understand that air bags should be turned off only for people at risk and turned back on for people not at risk.
☐	**Loss of air bag protection.** I understand that turning off an air bag may have serious safety consequences. When an air bag is off, even belted occupants may hit their head, neck or chest on the steering wheel, dashboard or windshield in a moderate to serious crash. That possibility may be increased in some newer vehicles with seat belts that are specially designed to work with the air bag. Those belts, which are designed to reduce the concentration of crash forces on any single part of the body, typically allow the occupant to move farther forward in a crash than older belts. Without the air bag to cushion this forward movement, the chance of the occupant hitting the vehicle interior is increased.
☐	**Waiver.** I understand that motor vehicle dealers and repair businesses may require me to sign a waiver of liability before they install an on-off switch.

Part F. Certification. **I certify to the U. S. Department of Transportation that the information, certifications and understandings given or indicated by me on this form are truthful, correct and complete to the best of my knowledge and belief. I recognize that the statements I have made on this form concern a matter within the jurisdiction of a department of the United States and that making a false, fictitious or fraudulent statement may render me subject to criminal prosecution under Title 18, United States Code, Section 1001.**	
Date	Signature of owner/lessee

Additional instructions and information for vehicle owners and lessees: An owner or lessee of multiple vehicles (e.g., a fleet owner) who wants an on-off switch for the same air bag (e.g., just the passenger air bag) in more than one vehicle and for the same reason does not need to submit a separate form for each vehicle. Instead, the owner or lessee may list the make, model, model year, and vehicle identification number for each of those vehicles and attach the list to a copy of this form. Each page of the list must be signed and dated by the owner or lessee. A list may also be attached to a single copy of this form if the owner or lessee wishes to request authorization for on-off switches for both air bags in multiple vehicles.

Please note that an agency may not conduct or sponsor, and a person is not required to respond to, a collection of information unless it displays a currently valid OMB control number. That number appears above.

APPENDIX C TO PART 595—INSTALLATION OF AIR BAG ON-OFF SWITCHES

INSTALLATION OF AIR BAG ON-OFF SWITCHES	OMB No. 2127-0588 Expiration Date: 11/30/00

(The form and instructions below will be included in agency letters sent to vehicle owners or lessees authorizing the installation of air bag on-off switches. Each letter will identify the owner or lessee and the vehicle for which installation is authorized.)

The vehicle dealer or repair business identified below made the following installations of on-off switch(es) for the air bags in the motor vehicle identified above:			
Name of motor vehicle dealer or repair business			
Street address			
City	State	Zip Code	
On-off switch(es) were installed for the air bag(s) checked on this form:	**driver air bag** ☐	**passenger air bag** ☐	
Date of installation	Signature of authorized representative of dealer or repair business		

Instructions for vehicle dealers and repair businesses: Within 7 days of your installation of an on-off switch in the vehicle identified above, you must complete this form and mail it to: National Highway Traffic Safety Administration, Attention: Air Bag Switch Installation Forms, 400 Seventh St., S. W., Washington, D.C. 20590-1000.

Note: An agency may not conduct or sponsor, and a person is not required to respond to, a collection of information unless it displays a currently valid OMB control number. That number appears above.

PARTS 596–598 [RESERVED]

PART 599—REQUIREMENTS AND PROCEDURES FOR CONSUMER ASSISTANCE TO RECYCLE AND SAVE ACT PROGRAM

Subpart A—General

Sec.
599.100 Purpose.
599.101 Scope.
599.102 Definitions.

Subpart B—Participating Dealers, Salvage Auctions and Disposal Facilities

599.200 Registration of participating dealers.
599.201 Identification of salvage auctions and disposal facilities.

Subpart C—Qualifying Transactions and Reimbursement

599.300 Requirements for qualifying transactions.
599.301 Limitations and restrictions on qualifying transactions.
599.302 Dealer application for reimbursement—submission, contents.
599.303 Agency disposition of dealer application for reimbursement.
599.304 Payment to dealer.

Subpart D—Disposal of Trade-in Vehicle

599.400 Transfer or consignment by dealer of trade-in vehicle.
599.401 Requirements and limitations for disposal Facilities that receive trade-in vehicles under the CARS program.
599.402 Requirements and limitations for salvage auctions that are consigned trade-in vehicles under the CARS program.
599.403 Requirements and limitations for dealers.

Subpart E—Enforcement

599.500 Definitions.
599.501 Generally.
599.502 Record retention.
599.503 Access to records.
599.504 Suspension, revocation, and reinstatement of registration and participation eligibility.
599.505 Reports and investigations.
599.506 Notice of violation.
599.507 Disclosure of evidence.
599.508 Statements of matters in dispute and submission of supporting information.
599.509 Hearing officer.
599.510 Initiation of action before the hearing officer.
599.511 Counsel.
599.512 Hearing location and costs.
599.513 Hearing procedures.
599.514 Assessment of civil penalties.
599.515 Appeals of civil penalties in excess of $100,000.00.
599.516 Collection of assessed or compromised civil penalties.
599.517 Other sanctions.

Subpart F—Requirements and Procedures for Exceptions

599.600 Exceptions—Applicability and requirements.
599.601 Procedures for requesting exception.
599.603 Disposition of requests for exception.
APPENDIX A TO PART 599—SUMMARY OF SALE/LEASE AND CERTIFICATIONS
APPENDIX B TO PART 599—ENGINE DISABLEMENT PROCEDURES FOR THE CARS PROGRAM
APPENDIX C TO PART 599—ELECTRONIC TRANSACTION SCREEN
APPENDIX D TO PART 599—CARS PURCHASER SURVEY
APPENDIX E TO PART 599—DISPOSAL FACILITY CERTIFICATION FORM
APPENDIX F TO PART 599—SALVAGE AUCTION CERTIFICATION FORM

AUTHORITY: 49 U.S.C. 32901, Notes; delegation of authority at 49 CFR 1.50.

SOURCE: 74 FR 37897, July 29, 2009, unless otherwise noted.

Subpart A—General

§ 599.100 Purpose.

This part establishes requirements and procedures implementing the program authorized under the Consumer Assistance to Recycle and Save Act of 2009.

§ 599.101 Scope.

The requirements of this part apply to new vehicle purchase or lease transactions, in combination with trade-in vehicle transactions that occur on or after July 1, 2009 up to and including November 1, 2009, and to the disposal of trade-in vehicles under the CARS Act.

§ 599.102 Definitions.

As used in this part—

Agency or NHTSA means the National Highway Traffic Safety Administration.

CARS Act means the Consumer Assistance to Recycle and Save Act of 2009, Public Law 111–32, 123 Stat. 1859 (June 24, 2009).

CARS Program means the program authorized under the Consumer Assistance to Recycle and Save Act of 2009, which NHTSA refers to as the Car Allowance Rebate System.

Category 1 truck means a non-passenger automobile, as defined in section 49 U.S.C. 32901(a)(17) and 49 CFR 523.3, except that such term does not include a category 2 truck.

Category 2 truck means a large van with a wheelbase of 124 inches or more, or a large pickup with a wheelbase of 115 inches or more.

Category 3 truck means a work truck, as defined in 49 U.S.C. 32901(a)(19).

Clear title means title to a vehicle that is free from all liens and encumbrances.

Combined Fuel Economy means—

(1) With respect to an eligible new vehicle, the number, expressed in miles per gallon, centered below the words ''Combined Fuel Economy'' on the label required to be affixed or caused to be affixed on a new automobile pursuant to subpart D of 40 CFR part 600.

(2) With respect to an eligible trade-in vehicle of model year 1985 or later, the number posted under the words ''Estimated New EPA MPG'' or ''New EPA MPG'' and above the word ''Combined,'' except that for a bi-fuel, dual fuel, or flexible fueled vehicle, that number must also be below the word ''Gasoline,'' on the fueleconomy.gov Web site of the Environmental Protection Agency for the make, model, and year of such vehicle.

Credit means an electronic payment to a dealer for a qualifying transaction under the program.

Dealer means a person licensed by a State who engages in the sale of a new automobile to a person who in good faith purchases such automobile for purposes other than resale.

Disposal facility means a facility listed on *http://www.cars.gov/disposal* as eligible to receive a trade-in vehicle for crushing or shredding under the CARS program, except in the case of a U.S. territory.

End-of-Life Vehicle Solutions or ELVS means an entity established under the National Vehicle Mercury Switch Recovery Program for the collection, recycling and disposal of elemental mercury from automotive switches.

Engine block means the part of the engine containing the cylinders and typically incorporating water cooling jackets and also including the crank shaft, connecting rods, pistons, bearings, cam(s), and cylinder head(s). In a rotary engine, the block includes the rotor housing and rotor.

GVWR means gross vehicle weight rating.

Lease means a lease of a new vehicle for a period of not less than 5 years, excluding any lease with a balloon payment due prior to the elapsing of 5 years.

Manufacturer's Suggested Retail Price or *MSRP* means the base Manufacturer's Suggested Retail Price, excluding any dealer accessories, optional equipment, taxes and destination charges.

National Motor Vehicle Title Information System or *NMVTIS* means the online system established under the oversight of the Department of Justice that enables consumers and others to access vehicle history information, including salvage history, total loss information, and title branding and odometer information, and to which insurance companies and salvage yards must report vehicle status information. (*http://www.nmvtis.gov.*)

New Vehicle means an automobile or work truck, the equitable or legal title of which has not been transferred to any person other than the purchaser.

Non-titling Jurisdiction means a State that does not issue a title for certain typically older vehicles.

Passenger automobile means a passenger automobile, as defined in section 49 U.S.C. 32901(a)(18) and 49 CFR 523.4.

Person means an individual, corporation, company, association, firm, partnership, society, or joint stock company.

Purchaser means a person purchasing or leasing a new vehicle under the CARS Program.

Salvage auction means an entity that receives a CARS trade-in vehicle from a dealer and is authorized to sell it only to a disposal facility on the Disposal Facility List and that will make all the necessary certifications for salvage auctions under the CARS program.

State means any one of the 50 United States, the District of Columbia, Puerto Rico, the Virgin Islands, Guam, American Samoa, or the Commonwealth of the Northern Mariana Islands.

Subpart B—Participating Dealers, Salvage Auctions and Disposal Facilities

§ 599.200 Registration of participating dealers.

(a) *In general.* A dealer may apply for a credit under the CARS Program only if it meets the Required Dealer Qualifications for Registration under this subpart, is registered in accordance with this subpart, and is currently registered at the time it submits an application for reimbursement.

(b) *Required dealer qualifications for registration.* A dealer seeking to register must have:

(1) A currently operating new automobile dealership and business address within a State in the United States;

(2) A currently active business license under the law of the State where the new automobile dealership is located to operate that dealership;

(3) A currently active franchise agreement to sell new automobiles with an original equipment manufacturer of automobiles;

(4) A bank account in a U.S. bank in a State and a bank account routing number for electronic transfer of funds;

(5) The ability to submit application materials and perform transactions electronically using the Internet; and

(6) Not been convicted of a crime involving motor vehicles or any fraud or financial crime under State or Federal law.

(c) *Registration procedures.*

(1) Using comprehensive lists of franchised dealers provided by original equipment manufacturers, as updated by these manufacturers, the agency will mail a letter to each listed dealer describing a secure electronic process and providing an authorization code by which the dealer, following the process in paragraph (c)(2) of this section, can effect registration.

(2) A dealer contacted in accordance with paragraph (c)(1) of this section may register electronically as a participating dealer under the CARS Program by using the authorization code and following the instructions provided in the letter mailed under paragraph (c)(1) of this section, and submitting the following information electronically or validating the information, where it exists already on an electronic form:

(i) Dealer's Federal Tax Identification Number (TIN) and OEM assigned dealer franchise number;

(ii) Legal business name, doing business as name (if applicable), dealership physical and mailing address, telephone number, and fax number;

(iii) Name and title of dealer representative authorized to submit transactions under this program, and phone number and e-mail address of representative; and

(iv) Name of U.S. bank used by dealership, bank account number, and bank account routing number.

(3) A dealer must register separately, following the process under paragraph (c)(2) of this section, for each make of vehicle it sells, using the authorization code associated with that vehicle make.

(d) *Disposition of registration application.* The agency will review the registration application for compliance with this part, including completeness, and notify the dealer as follows:

(1) For an approved registration:

(i) By e-mail notification to the authorized dealer representative, with a user identification and password that will allow the submission of transactions; and

(ii) By listing the ''doing business as'' name, physical address, and general telephone number of the dealer on the agency Web site at *http://www.cars.gov.*

(2) For a disapproved registration, by withholding the dealer identification information from the agency's Web site and providing e-mail notification to the authorized dealer representative of the reasons for rejecting the application.

(e) *Revocation of Dealer Registration.*

(1) *Termination or Discontinuance of Franchise.*

(i) A dealer whose franchise agreement with an original equipment manufacturer (OEM) has expired without renewal, has been terminated, or otherwise is no longer in effect shall be automatically removed as a matter of course, subject to paragraph (e)(1)(iii), from the agency's list of registered dealers and may no longer receive a credit for new transactions under the CARS Program submitted for repayment on or after the date that the franchise expired or no longer is in effect.

(ii) Paragraph (e)(1)(i) of this section does not preclude a dealer registered under other franchise agreements from receiving a credit for transactions under those agreements that have not expired or been discontinued.

(iii) A dealer whose name is removed from the agency's list of registered dealers under paragraph (e)(1)(i) shall be reinstated to the list of registered dealers upon a showing to NHTSA of proper and adequate license to sell new vehicles to ultimate purchasers.

(2) *Other suspension or revocations actions.* The agency may also suspend or revoke the registration of a dealer as provided in §599.504.

(f) *Notification of changes.* A registered dealer shall immediately notify the agency of any change to the information submitted under this section and any change to the status of its State license or franchise.

(g) *Pre-registration transactions.* An otherwise qualifying transaction that occurs during the time period prescribed under §599.301(a) is not a noncomplying transaction solely because a dealer is not registered at the time of

the transaction, except that the dealer must be eligible to register and must register under § 599.200 in order to be entitled to reimbursement for a credit extended under the CARS program.

§ 599.201 Identification of salvage auctions and disposal facilities.

(a) *Participating entities.* Subject to the conditions and requirements of paragraph (b), participation in the transfer and disposal of a trade-in vehicle under the CARS program is limited to the following entities:

(1) A salvage auction that will transfer trade-in vehicles received under this program only to a disposal facility identified in paragraph (a)(2) or (a)(3) of this section.

(2) A disposal facility listed on the Web site at *http://www.cars.gov/disposal;* or

(3) A facility that disposes of vehicles in Puerto Rico, the Virgin Islands, Guam, American Samoa, or the Commonwealth of the Northern Mariana Islands.

(b) *Conditions of Participation.* A participating entity identified in paragraph (a) of this section must:

(1) Comply with all the provisions and restrictions and make all the required certifications contained in subpart D of this part.

(2) In the case of a disposal facility identified in paragraph (a)(2) of this section, be currently listed on the Web site at *http://www.cars.gov/disposal*, as of the date of its participation in the disposal of the trade-in vehicle.

(c) *Removal of authority to participate.*

(1) A disposal facility that qualifies as such by active membership in ELVS and that fails to maintain active ELVS membership may be automatically removed as a matter of course from the agency's list of disposal facilities maintained at *http://www.cars.gov/disposal* authorized to participate in the CARS program.

(2) The agency may also suspend or remove a salvage auction's or disposal facility's authority to participate in the CARS program in accordance with the procedures of § 599.504.

[74 FR 37897, July 29, 2009, as amended at 74 FR 38976, Aug. 5, 2009]

Subpart C—Qualifying Transactions and Reimbursement

§ 599.300 Requirements for qualifying transactions.

(a) *In general.* To qualify for a credit under the CARS Program, a dealer must sell or lease a new vehicle that meets eligibility requirements to a purchaser, obtain a trade-in vehicle that meets eligibility requirements from the purchaser, satisfy combined fuel economy requirements for both the new and trade-in vehicles, store the trade-in vehicle at the dealership or property owned by or under the control of the dealership until the engine is disabled, disable the engine of the trade-in vehicle at the dealership or property owned by or under the control of the dealership, satisfy the limitations and restrictions of the program, arrange for disposal of the trade-in vehicle at a qualifying disposal facility or through a qualifying salvage auction, and register and submit a complete application for reimbursement to NHTSA, demonstrating that it meets all the requirements of this part.

(b) *Threshold eligibility requirements that apply to all trade-in vehicles.* The trade-in vehicle must be:

(1) In drivable condition, as demonstrated by actual operation of the motor vehicle on public roads by the dealer and by certification by the dealer and by the purchaser, as provided in Appendix A to this part, certifications section, that the vehicle was in drivable condition on the date of the qualifying transaction;

(2) Continuously insured consistent with the applicable State law for a period of not less than 1 year immediately prior to the trade-in, as demonstrated by:

(i) One or more current insurance cards specifying the make, model, model year, and vehicle identification number (VIN) of the insured vehicle and displaying a continuous one-year period of insurance coverage; or a copy of an insurance policy document (*e.g.*, a declarations page or pages) showing a continuous one-year period of insurance coverage for the vehicle; or a signed letter, on insurance company letterhead, specifying the same vehicle identification information (*i.e.*, make,

model, model year, and VIN) of the insured vehicle and identifying the period of continuous coverage, which must be for at least one year prior to the date of the trade-in; and

(ii) By certification by the purchaser, as provided in Appendix A to this part, certifications section, that the vehicle was so insured;

(3) Continuously registered in a State to the purchaser for a period of not less than one year immediately prior to the trade-in, as demonstrated by:

(i) A current State registration document or series of registration documents in the name of the purchaser evidencing registration for a period of not less than one year immediately prior to the trade-in; or a current State registration document showing registration in the name of the purchaser and a title that confers title on the purchaser not less than one year immediately prior to the trade-in; or a current State registration document showing registration in the name of the purchaser and a document from a commercially available vehicle history provider evidencing registration for a period of not less than one year immediately prior to the trade-in; and

(ii) By certification by the purchaser, as provided in Appendix A to this part, certifications section, that the vehicle was so registered;

(4) Manufactured less than 25 years before the date of the trade-in, as demonstrated by model year information on the title or, where that information is inconclusive, by direct observation by the dealer of the month and year of the vehicle's manufacture, which appears on the safety standard certification label of the vehicle, provided that on the 25th year, the 25-year requirement is satisfied if the manufacture date falls anytime within the month 25 years before the date of trade-in, and by certification by the dealer, as provided in Appendix A to this part, certifications section, that the manufacture date is less than 25 years before the date of trade-in.

(c) *Threshold eligibility requirements that apply to all new vehicles.* The new vehicle must:

(1) Be either purchased or leased for a lease period of not less than 5 years;

(2) Have a manufacturer's suggested retail price of $45,000 or less.

(d) *Trade-in Vehicle—Disclosure of Scrap Value, Engine Disablement, and Title Marking.* As part of a qualifying transaction under this part, the dealer shall:

(1) During the transaction, disclose to the person purchasing or leasing an eligible new vehicle and trading in an eligible trade-in vehicle, the best estimate of the scrap value of the trade-in vehicle, inform that person that the dealer is authorized to retain $50 of this amount as payment for its administrative costs of participation in the program, and certify, as provided in Appendix A to this part, certifications section, that it has made such disclosure;

(2) Except as provided in paragraph (e) of this section, store the trade-in vehicle at the dealership or property owned by or under the control of the dealership until its engine is disabled following the procedures set forth in Appendix B to this part, disable the engine of the trade-in vehicle at the dealership or property owned by or under the control of the dealership following the procedures set forth in Appendix B to this part, and certify, as provided in Appendix A to this part, dealer certifications section, that either the engine of the trade-in vehicle has been disabled at the dealership or property owned by or under the control of the dealership, or that the trade-in vehicle will be stored at the dealership or property owned by or under the control of the dealership until the engine is disabled and the engine of the trade-in vehicle will be disabled by the dealer at the dealership or property owned by or under the control of the dealership not more than seven calendar days after the dealer's receipt of payment for the transaction; and

(3) Prior to submitting an application for reimbursement under §599.302, legibly mark the front and back of the trade-in vehicle's title in prominent letters that do not obscure the owner's name, VIN, or other writing as follows: ''Junk Automobile, CARS.gov.''

(e) *Dealer transfers prior to July 24, 2009.*

(1) Subject to the provisions of paragraph (e)(2) of this section, if the dealer

transferred the vehicle prior to July 24, 2009, the dealer may either:

(i) Locate the vehicle, disable its engine following the procedures set for the in Appendix B to this part, and provide the certification in Appendix A to this part, certifications section, that it has disabled the engine; or

(ii) Obtain a sworn affidavit from a disposal facility that it has crushed or shredded the vehicle, including the engine block, and provide supporting documents sufficient to establish that fact.

(2) The dealer and disposal facility must comply with all other requirements of this part, including the requirement that the trade-in vehicle be crushed or shredded, except that the affidavit and supporting documents provided for under paragraph (e)(1)(ii) of this section may substitute for the disposal facility certification form.

(f) *Qualifying transactions ($3,500 Credit).* Subject to the requirements of paragraphs (b), (c), and (d), and, if applicable, paragraph (e) of this section and the additional requirements of §§ 599.301, 599.302, and 599.303 of this subpart, each of the following transactions qualifies for a credit of $3,500 under this program:

(1) The new vehicle is a passenger automobile with a combined fuel economy of at least 22 mpg, the eligible trade-in vehicle has a combined fuel economy of 18 mpg or less and is a passenger automobile, category 1 truck, or category 2 truck, and the combined fuel economy of the new vehicle is at least 4 mpg, but less than 10 mpg higher than the combined fuel economy of the eligible trade-in vehicle.

(2) The new vehicle is a category 1 truck with a combined fuel economy of at least 18 mpg, the eligible trade-in vehicle has a combined fuel economy of 18 mpg or less and is a passenger automobile, category 1 truck, or category 2 truck, and the combined fuel economy of the new vehicle is at least 2 mpg, but less than 5 mpg higher than the combined fuel economy of the eligible trade-in vehicle.

(3) The new vehicle is a category 2 truck with a combined fuel economy of at least 15 mpg, the eligible trade-in vehicle has a combined fuel economy of 18 mpg or less and is a category 2 truck, and the combined fuel economy of the new vehicle is 1 mpg higher than the combined fuel economy of the eligible trade-in vehicle.

(4) The new vehicle is a category 2 truck with a combined fuel economy of at least 15 mpg and the eligible trade-in vehicle is a category 3 truck of model year 2001 or earlier.

(5) The new vehicle is a category 3 truck, the eligible trade-in vehicle is a category 3 truck of model year 2001 or earlier, and the new fuel efficient vehicle has a GVWR less than or equal to the GVWR of the eligible trade-in vehicle.

(g) *Qualifying transactions ($4,500 Credit).* Subject to the requirements of paragraphs (b), (c), and (d), and, if applicable, paragraph (e) of this section and the additional requirements of §§ 599.301, 599.302, and 599.303 of this subpart, each of the following transactions qualifies for a credit of $4,500 under this program:

(1) The new vehicle is a passenger automobile with a combined fuel economy of at least 22 mpg, the eligible trade-in vehicle has a combined fuel economy of 18 mpg or less and is a passenger automobile, category 1 truck, or category 2 truck, and the combined fuel economy of the new vehicle is at least 10 mpg higher than the combined fuel economy of the eligible trade-in vehicle.

(2) The new vehicle is a category 1 truck with a combined fuel economy of at least 18 mpg, the eligible trade-in vehicle has a combined fuel economy of 18 mpg or less and is a passenger automobile, category 1 truck, or category 2 truck, and the combined fuel economy of the new vehicle is at least 5 mpg higher than the combined fuel economy of the eligible trade-in vehicle.

(3) The new vehicle is a category 2 truck with a combined fuel economy of at least 15 mpg, the eligible trade-in vehicle has a combined fuel economy of 18 mpg or less and is a category 2 truck, and the combined fuel economy of the new vehicle is at least 2 mpg higher than the combined fuel economy of the eligible trade-in vehicle.

(h) *No other qualifying transactions.* Transactions described under paragraphs (f) and (g) of this section are the

only transactions that qualify for payment of a credit to a dealer under the CARS Program.

[74 FR 37897, July 29, 2009, as amended at 74 FR 38976, Aug. 5, 2009]

§ 599.301 Limitations and restrictions on qualifying transactions.

(a) *Date of transaction.* A qualifying transaction may not occur on a date before July 1, 2009 or after November 1, 2009, and is subject to available agency funds for the CARS Program.

(b) *One credit per transaction.* Only one credit may be applied towards the purchase or lease price of each new vehicle.

(c) *One credit per person.* A person that participates in a transaction for which a credit is issued under the CARS Program, whether as a single owner or a joint-registered owner of either an eligible trade-in vehicle, a new vehicle, or both, may not participate or be named in another transaction for which a credit is issued under the CARS program, either as a registered owner of the trade-in vehicle or as a purchaser of the new vehicle.

(d) *Transfer of title.*

(1) Except as provided in paragraph (d)(2) of this section, a dealer may not apply for or receive reimbursement for a credit extended to a purchaser under a CARS program transaction unless it has been conveyed clear title and physically possesses the title to the trade-in vehicle.

(2) In the case of a trade-in vehicle registered in a State that is a non-titling jurisdiction and that, in accordance with State law, has no title, the requirement in paragraph (d)(1) of this section that clear title be conveyed is satisfied if the purchaser shows proof of registration in the purchaser's name and provides a bill of sale conferring ownership of the trade-in vehicle to the dealer.

§ 599.302 Dealer application for reimbursement—submission, contents.

(a) *In general.* A dealer's application for reimbursement must demonstrate that the requirements and limitations governing qualifying transactions in § 599.300 and § 599.301 of this subpart have been met, and must comply with the submission and contents requirements of this section.

(b) *Electronic submission.* The application for reimbursement must be submitted by using the login and password provided under § 599.200(d)(1) and following the procedures provided in the letter mailed under § 599.200(c)(1) of this part.

(c) *Application contents.* An application shall consist of an electronic transaction form (portion reproduced in Appendix C to this part) requiring input of information into relevant fields, electronic copies of supporting documents, and applicable certifications, as provided in Appendix A to this part, certifications section. As its application for each transaction, the dealer shall:

(1) Input the following information into relevant fields on the transaction form:

(i) *Purchaser information.*

(A) *Name.* The first name, middle initial and last name of each purchaser, if an individual, or the full legal name of the company, association or other organization that is the purchaser.

(B) *Residence address (or, for an organization, business address).* The full address of each purchaser.

(C) *Driver's license or State identification number.* The State driver's license or State identification number of each purchaser or, for an organization, its tax identification number.

(ii) *Trade-in vehicle information.*

(A) *Make.* The make of the vehicle.

(B) *Model.* The model of the vehicle.

(C) *Model year.* The model year of the vehicle.

(D) *Vehicle identification number (VIN).* The 17 digit VIN of the vehicle.

(E) *CARS Act vehicle category.* The category of vehicle as defined under the CARS Act. (Enter, as applicable, passenger automobile, category 1 truck, category 2 truck or category 3 truck.)

(F) *State of title.*

(G) *State of registration.*

(H) *Start date of registration.*

(I) *Start date of insurance.*

(J) *End date of registration.*

(K) *Odometer reading.* The odometer reading of the vehicle at the time of the trade-in.

(L) *EPA combined fuel economy*. The listed EPA combined fuel economy of the vehicle.

(M) *Vehicle description*. The exact ''vehicle description'' for the vehicle found on *http://www.fueleconomy.gov*.

(iii) *New vehicle information*.

(A) *Make*. The make of the vehicle.

(B) *Model*. The model of the vehicle.

(C) *Model year*. The model year of the vehicle.

(D) *Vehicle identification number (VIN)*. The 17 digit VIN of the vehicle.

(E) *EPA combined fuel economy*. The listed EPA combined fuel economy of the vehicle.

(F) *CARS Act vehicle category*. The category of vehicle as defined under the CARS Act. (Enter, as applicable, passenger automobile, category 1 truck, category 2 truck or category 3 truck.)

(G) *Base manufacturer's suggested retail price (MSRP)*. The price of the new vehicle affixed to the Monroney label prior to the addition of any options, features, taxes or destination charges.

(H) *Vehicle description*. The exact ''vehicle description'' for the vehicle found on *http://www.fueleconomy.gov*.

(iv) *Trade-in vehicle disposition information*.

(A) *Identification of entity*. The name, address and telephone number of the disposal facility or salvage auction to which the vehicle will be or has been transferred or consigned.

(B) *Disposal facility number*. The unique identifier assigned to the disposal facility identified on the CARS Web site, and to which the vehicle is being transferred or consigned.

(v) *Transaction information*.

(A) *Date of sale or lease*. The date on which the vehicle transaction with the purchaser occurred.

(B) *Transaction request amount*. The amount of the credit for which the dealer is applying.

(2) Attach the following supporting documentation in electronic format (pdf, tif, jpeg) in the following order:

(i) *Proof of title*. A copy of the front and back of the title of the trade-in vehicle, showing assignment to the dealer free and clear of any lien or encumbrance on the vehicle's title, with the ''Junk Automobile, CARS.gov'' marking on both sides.

(ii) *Proof of insurance*. A copy of insurance policy cards or documents for the trade-in vehicle to confirm that the trade-in vehicle insurance was continuous for a period of not less than one year prior to trade in.

(iii) *Proof of registration*. A copy of the registration card or documents for the trade-in vehicle identifying the owner, the vehicle, and dates of registration to confirm that the vehicle was registered to the purchaser for a period of not less than one year prior to trade in.

(iv) *Purchaser identification*.

(v) *Summary of sale/lease and certifications form* (Appendix A to this part, summary section).

(vi) *Manufacturer certificate of origin or manufacturer statement of origin of the new vehicle*.

(vii) *CARS purchaser survey*.

(viii) *Fueleconomy.gov side-by-side comparison of the trade-in vehicle and the new vehicle*.

(ix) *Certification from salvage auction or disposal facility*.

(x) *Copy of vehicle sales or lease contract*.

(3) Make the certifications provided in Appendix A to this part, certifications section.

§ 599.303 Agency disposition of dealer application for reimbursement.

(a) *Application review*. Upon receipt of an application for reimbursement, the agency shall review the application to determine whether it is complete and satisfies all the requirements of this subpart.

(b) *Complying application*. An application that is determined to meet all the requirements of this subpart shall be approved for payment, in accordance with the provisions of § 599.304.

(c) *Non-complying application*. An application that is incomplete or that otherwise fails to meet all the requirements of this subpart shall be rejected, and the submitter shall be informed electronically of the reason for rejection. NHTSA shall have no obligation to correct a non-conforming submission.

(d) *Electronic rejection*. An application is automatically rejected, with system notification to the tendering dealer, if

the transaction falls outside of the permissible time period, exceeds the permissible MSRP, identifies a purchaser that has participated in a previous transaction, or identifies the vehicle identification number of a new or trade-in vehicle that was involved in a previous transaction.

(e) *Correction and resubmission.* A dealer may correct and resubmit a rejected application for reimbursement, without penalty.

§ 599.304 Payment to dealer.

Upon completion of review of an application for reimbursement from a registered dealer that satisfies all the requirements of this part, the agency shall reimburse the dealer, by electronic transfer to the account identified under the process in § 599.200(c) of this part.

Subpart D—Disposal of Trade-in Vehicle

§ 599.400 Transfer or consignment by dealer of trade-in vehicle.

(a) *In general.*

(1) A trade-in vehicle accepted as part of an eligible transaction may be provided for disposal by a dealer either to a disposal facility or to a salvage auction, as described in and subject to the conditions of § 599.201 of this part.

(2) Dealers, disposal facilities, and salvage auctions involved in the disposal of the trade-in vehicle must each comply with the applicable provisions of this subpart.

(b) *Transfer by dealer or salvage auction to a disposal facility.* If the trade-in vehicle is transferred by the dealer or salvage auction to a disposal facility, the disposal facility must, as a condition of the transfer:

(1) Make the certifications contained in the Disposal Facility Certification Form in Appendix E to this part, signed by an official with authority to bind the disposal facility;

(2) At the time of the transfer, deliver the signed Disposal Facility Certification Form to the dealer or salvage auction that transferred the trade-in vehicle; and

(3) Comply with the requirements and limitations of § 599.401.

(c) *Consignment by dealer to a salvage auction.* If the trade-in vehicle is consigned by the dealer to a salvage auction, the salvage auction must, as a condition of the consignment:

(1) Make the certifications contained in the Salvage Auction Certification Form in Appendix F to this part, signed by an official with authority to bind the salvage auction;

(2) At the time of the consignment, deliver the signed Salvage Auction Certification Form to the dealer that authorized the salvage auction to sell the trade-in vehicle.

(1) Make the certifications contained in the Salvage Auction Certification Form to the dealer that authorized the salvage auction to sell the trade-in vehicle; and

(3) Comply with the requirements and limitations of § 599.402.

EDITORIAL NOTE: At 74 FR 37902, July 29, 2009, § 599.400 was added, however, there was a codification error in the original document resulting in two paragraphs (c)(1).

§ 599.401 Requirements and limitations for disposal facilities that receive trade-in vehicles under the CARS program.

(a) The disposal facility must:

(1) Not more than 7 days after receiving the vehicle, report the vehicle to NMVTIS as a scrap vehicle.

(2) Remove and dispose of all refrigerants, antifreeze, lead products, mercury switches, and such other toxic or hazardous vehicle components prior to crushing or shredding in accordance with applicable Federal and State requirements;

(3) Crush or shred the trade-in vehicle onsite, including the engine block and the drive train (unless with respect to the drive train, the transmission, drive shaft, and rear end are sold separately), using its own machinery or a mobile crusher, within 270 days after receipt of the vehicle from the dealer or salvage auction;

(4) Not more than 7 days after the vehicle is crushed or shredded, report the vehicle to NMVTIS as crushed or shredded.

(b) The disposal facility may not sell or transfer the engine block of the vehicle or, except as allowed under paragraph (c)(2) of this section, the drive

train before they are crushed or shredded or otherwise allow the vehicle to leave the disposal facility before it is crushed or shredded.

(c) The disposal facility may:

(1) Sell any part of the vehicle other than the engine block or drive train;

(2) Notwithstanding paragraph (c)(1) of this section, sell the drive train provided the transmission, drive shaft, and rear end are sold as separate parts;

(3) Retain the proceeds from parts sold under this paragraph.

(d) A completed Disposal Facility Certification Form (Appendix E to this part) for an individual transaction, which includes a certification by the disposal facility that the trade-in vehicle will be crushed or shredded within 180 days of receipt by the disposal facility, is deemed to be amended to include an extension of time such that the trade-in vehicle will be crushed or shredded within 270 days of receipt by the disposal facility.

[74 FR 37897, July 29, 2009, as amended at 75 FR 5251, Feb. 2, 2010]

§ 599.402 Requirements and limitations for salvage auctions that are consigned trade-in vehicles under the CARS program.

(a) The salvage auction must:

(1) Within 3 days after the date the dealer consigns the vehicle or prior to auctioning the vehicle, whichever is earlier, report the status of the vehicle to NMVTIS;

(2) Limit participation in the auction to disposal facilities that, when the auction is held:

(i) Appear on the list identified in § 599.201(a)(2) or are described in § 599.201(a)(3); and

(ii) Agree to make the certifications in the Salvage Auction Certification Form (Appendix F to this part).

(3) As a condition of transferring title to the disposal facility, obtain from that facility the signed Disposal Facility Certification Form (Appendix E to this part), insert on the top of the form the appropriate CARS invoice number received from the dealer, if known, and provide the form to NHTSA at *disposal@cars.gov*, and include that invoice number in the e-mail subject line.

(b) [Reserved]

§ 599.403 Requirements and limitations for dealers.

A dealer receiving a Disposal Facility Certification Form or Salvage Auction Certification Form under § 599.400(b)(2) or (c)(2) shall insert on the top of the form the appropriate CARS invoice number, if known, and within 7 days of receipt, submit such certification form to NHTSA at *disposal@cars.gov*.

Subpart E—Enforcement

§ 599.500 Definitions.

As used in this subpart—

Administrator means the Administrator of the National Highway Traffic Safety Administration, or his or her designee.

Chief Counsel means the NHTSA Chief Counsel, or his or her designee.

Hearing Officer means a NHTSA employee who has been delegated the authority to assess civil penalties.

NHTSA Enforcement means the NHTSA Associate Administrator for Enforcement, or his or her designee.

Notice of violation means a notification of violation and preliminary assessment of penalty issued by the Chief Counsel to a party.

Party means the person alleged to have committed a violation of the CARS Act, regulations thereunder, or other applicable law, and includes an individual, a public or private corporation, and a partnership or other association.

Violation means any non-conformance with the CARS Act or the regulations in this part except § 599.200(e)(1)(i) and § 599.201(c)(1), the submission of incomplete or inaccurate information to NHTSA or an entity identified under this part, or the failure to maintain records, to permit access to records or to update information that has been submitted to NHTSA under this part, but does not include a clerical error. In the context of dealer registration and disposal facility or salvage auction participation eligibility, *violation* also includes any conviction of a crime involving motor vehicles or any fraud or financial crime under State or Federal law.

§ 599.501 Generally.

The provisions of 5 U.S.C. 554, 556 and 557 do not apply to any proceedings conducted pursuant to this subpart.

§ 599.502 Record retention.

(a) Manufacturers, dealers, salvage auctions, and disposal facilities shall keep records of all transactions under the CARS Act and regulations thereunder for a period of five calendar years from the date on which they were generated or acquired by the manufacturer, salvage auction, dealer, or disposal facility, and shall promptly make those records available to NHTSA Enforcement or DOT's Office of the Inspector General upon request.

(b) Records to be retained under this subpart include all documentary materials and other information-storing media that contain information concerning transactions under the CARS Program, including any material generated or communicated by computer, electronic mail, or other electronic means. Such records include, but are not limited to, lists, compilations, certifications, dealer application information, salvage auction or disposal facility information, owner eligibility information, vehicle eligibility information (including vehicle fuel economy), dealer applications for reimbursement under the program, vehicle identification number data, vehicle ownership information, vehicle title, registration and insurance information, sales agreements, bills of sale, lease agreements, manufacturer's certificate or statement of origin, other rebate and/or incentive programs used in conjunction with transactions under the program, bank account and routing number information, electronic funds transfer and payment information, reports made to the National Motor Vehicle Title Information System (NMVTIS), reports regarding vehicle scrappage values and payment, reports in connection with the transfer of vehicles to salvage auctions and disposal facilities; reports from disposal facilities in connection with the crushing or shredding of vehicles under the program, and any other documents that are related to transactions.

(c) Duplicate copies need not be retained. Information may be reproduced or transferred from one storage medium to another (*e.g.*, from electronic format to CD–ROM) as long as no information is lost in the reproduction or transfer, and when so reproduced or transferred the original form may be treated as a duplicate.

§ 599.503 Access to records.

The Administrator shall have the right to enter onto the premises of manufacturers, dealers, salvage auctions and disposal facilities during normal business hours in order to: access, inspect and audit records and other sources of information maintained by any of these entities under this Program; to inspect vehicles traded in or sold under this program, including taking all actions necessary to determine whether trade-in vehicles have operative engines; and/or to interview persons who may have relevant knowledge.

§ 599.504 Suspension, revocation, and reinstatement of registration and participation eligibility.

(a) *Suspension or revocation of dealer registration, or salvage auction or disposal facility participation eligibility.*

(1) When the NHTSA Chief Counsel determines that a violation has likely occurred, the Administrator may notify the dealer, salvage auction or disposal facility in writing of the facts giving rise to the allegation of a violation and the proposed length of a suspension, if applicable, or revocation of registration, in the case of a dealer, or participation eligibility in the case of a salvage auction or disposal facility.

(2) The notice shall afford the dealer, salvage auction or disposal facility an opportunity to present data, views, and arguments, in writing and/or in person, within 30 days of the date of the notice, as to whether the violation occurred, why its registration or participation eligibility ought not to be suspended or revoked, or whether the suspension should be shorter than proposed. The Administrator may, for good cause, reduce the time allowed for response.

(3) If the Administrator decides, on the basis of the available information, that the dealer, salvage auction or disposal facility has committed a violation, the Administrator may suspend

or revoke the dealer registration or the participation eligibility of the salvage auction or disposal facility.

(4) The Administrator shall notify the dealer, salvage auction or disposal facility in writing of the decision, including the reasons for it. The decision shall reflect the gravity of the offense.

(5) A suspension or revocation is effective as of the date of the Administrator's written notification, unless another date is specified therein.

(6) The Administrator shall state the period of any suspension in the notice to the dealer, salvage auction or disposal facility.

(7) There shall be no opportunity to seek reconsideration of the Administrator's decision issued under this paragraph (a).

(b) *Reinstatement of suspended registration or participation eligibility.*

(1) When a registration or participation eligibility has been suspended under this subpart, the registration or participation eligibility will be reinstated after the expiration of the period of suspension specified by the Administrator, or such earlier date as the Administrator may subsequently decide is appropriate.

(2) Reinstatement is automatically effective as of the date previously set forth in the Administrator's written notification of suspension, unless another date is specified by the Administrator in writing.

(c) *Effect of suspension or revocation of registration or participation eligibility.*

(1) If a dealer's registration or a salvage auction or disposal facility's participation eligibility is suspended or revoked, as of the date of suspension or revocation, the dealer, salvage auction or disposal facility will not be considered registered or eligible to participate in the CARS Program, and must cease participating in the program.

(2) A dealer whose registration has been suspended will not be entitled to any rights or reimbursement of funds for new transactions submitted as of the effective date of the suspension or revocation.

(3) NHTSA may take such action as appropriate, including publication, to provide notice that a dealer's registration, or salvage auction's or disposal facility's participation eligibility has been suspended or revoked.

§ 599.505 Reports and investigations.

(a) Any person may report an apparent violation of the CARS Act or regulations issued thereunder to NHTSA.

(b) NHTSA may independently monitor for violations of the CARS Act or regulations issued thereunder.

(c) When a report of an apparent violation has been received by NHTSA, or when an apparent violation has been detected by any person working for NHTSA, the matter may be investigated or evaluated by NHTSA Enforcement. If NHTSA Enforcement believes that a violation may have occurred, NHTSA Enforcement may prepare a report and send the report to the NHTSA Chief Counsel.

(d) The NHTSA Chief Counsel will review the reports prepared by NHTSA Enforcement to determine if there is sufficient information to establish a likely violation.

(1) The matter may be returned to NHTSA Enforcement for further investigation, if warranted.

(2) The Chief Counsel may close a matter. A matter may be closed if, for example, the investigation has established that a violation did not occur, the alleged violator is unknown, there is insufficient information to support the existence of a violation and little likelihood of discovering additional relevant facts, or the magnitude of the matter is, under the circumstances, including availability of resources, insufficient to be pursued further.

(3) If the Chief Counsel determines that a violation has likely occurred, the Chief Counsel may:

(i) Issue a Notice of Violation to the party, and/or

(ii) In the case of a dealer recommend that the Administrator suspend or revoke registration in the program or in the case of a salvage auction or disposal facility, recommend that the Administrator suspend or revoke participation eligibility in the program.

(4) In the case of either paragraphs (d)(3)(i) or (ii) of this section, the NHTSA Chief Counsel will prepare a case file with recommended actions. A record of any prior violations by the

same person or entity, shall be forwarded with the case file.

§ 599.506 Notice of Violation.

(a) The agency has the authority to assess a civil penalty for any violation of the CARS Act or this part. The penalty may not be more than $15,000 for each violation.

(b) The Chief Counsel may issue a Notice of Violation to a party. Notice of Violation will contain the following information:

(1) The name and address of the party;

(2) The alleged violation and the applicable law or regulations violated;

(3) The amount of the maximum penalty that may be assessed for each violation;

(4) The amount of proposed penalty;

(5) A statement that payment of the proposed penalty within 30 days will settle the case without admission of liability;

(6) The place to which, and the manner in which, payment is to be made;

(7) A statement that the party may decline the Notice of Violation and that if the Notice of Violation is declined, the party has the right to a hearing prior to a final assessment of a penalty by a Hearing Officer.

(8) A statement that failure to either pay the proposed penalty on the Notice of Violation or to decline the Notice of Violation and request a hearing within 30 days of the date shown on the Notice of Violation will result in a finding of violation by default and that NHTSA will proceed with the civil penalty in the amount proposed on the Notice of Violation without processing the violation under the hearing procedures set forth in this subpart.

(c) The Notice of Violation may be delivered to the party by:

(1) Hand-delivery to the party or an employee of the party;

(2) Mailing to the party (certified mail is not required);

(3) Use of an overnight or express courier service; or

(4) Facsimile transmission or electronic mail (with or without attachments) to the party or an employee of the party.

(d) If a party submits a written request for a hearing as provided in the Notice of Violation within 30 days of the date shown on the Notice of Violation, the case file will be sent to the Hearing Officer for processing under the hearing procedures set forth in this subpart.

(e) If a party pays the proposed penalty on the Notice of Violation or an amount agreed on in compromise within 30 days of the date shown on the Notice of Violation, a finding of ''resolved with payment'' will be entered into the case file. Such payment shall not be an admission of liability.

(f) If the party agrees to pay the proposed penalty, but has not made payment within 30 days of the date shown on the Notice of Violation, NHTSA will enter a finding of violation by default in the matter and NHTSA will proceed with the civil penalty in the amount proposed on the Notice of Violation without processing the violation under the hearing procedures set forth in this subpart.

(g) If within 30 days of the date shown on the Notice of Violation a party fails to pay the proposed penalty on the Notice of Violation; and fails to request a hearing, then NHTSA will enter a finding of violation by default in the case file, and will assess the civil penalty in the amount set forth on the Notice of Violation without processing the violation under the hearing procedures set forth in this subpart.

(h) NHTSA's order assessing the civil penalty following a party's default is final agency action.

§ 599.507 Disclosure of evidence.

The alleged violator may, upon request, receive a free copy of all the written evidence in the case file, except material that would disclose or could lead to the disclosure of the identity of a confidential source. Following a timely request for a hearing, other evidence or material, if any, of whatever source or nature, may be examined at the Hearing Officer's offices or such other places and locations that the Hearing Officer may, in writing, direct, if there are adequate safeguards to prevent loss or tampering.

§ 599.508 Statements of matters in dispute and submission of supporting information.

(a) Within 30 days of the date shown on the Notice of Violation, the party, or counsel for the party, shall submit to NHTSA at the person or office listed in the Notice of Violation two complete copies via hand delivery, use of an overnight or express courier service, facsimile or electronic mail of:

(1) A detailed statement of factual and legal issues in dispute; and,

(2) All statements and documents supporting the party's case.

(b) One copy of the party's submission set forth above shall be labeled ''For Hearing Officer.''

(c) Failure to specify any non-jurisdictional issue in the party's submission will preclude its consideration.

§ 599.509 Hearing Officer.

(a) If a party timely requests a hearing after receiving a Notice of Violation, the Hearing Officer shall hear the case.

(b) The Hearing Officer is solely responsible for the case referred to him or her. The Hearing Officer has no other responsibility, direct or supervisory, for the investigation of cases referred for the assessment of civil penalties.

(c) The Hearing Officer decides each case on the basis of the information before him or her, and must have no prior connection with the case.

§ 599.510 Initiation of action before the Hearing Officer.

(a) After the Hearing Officer receives a case file from the Chief Counsel, the Hearing Officer notifies the party in writing of:

(1) The date, time and location of the hearing and whether the hearing will be conducted telephonically or at the DOT Headquarters building in Washington, D.C.;

(2) The right to be represented at all stages of the proceeding by counsel as set forth in § 599.511; and,

(3) The right to a free copy of all written evidence in the case file as set forth in § 599.507.

(b) On the request of a party, or at the Hearing Officer's direction, multiple proceedings may be consolidated if at any time it appears that such consolidation is necessary or desirable.

§ 599.511 Counsel.

A party has the right to be represented at all stages of the proceeding by counsel. A party electing to be represented by counsel must notify the Hearing Officer of this election in writing, after which point the Hearing Officer will direct all further communications to that counsel. A party represented by counsel bears all of its own attorneys' fees and costs.

§ 599.512 Hearing location and costs.

(a) Unless the party requests a hearing at which the party appears before the Hearing Officer in Washington, DC, the hearing shall be held telephonically. The hearing is held at the headquarters of the U.S. Department of Transportation in Washington, DC.

(b) The Hearing Officer may transfer a case to another Hearing Officer at a party's request or at the Hearing Officer's direction.

(c) A party is responsible for all fees and costs (including attorneys' fees and costs, and costs that may be associated with travel or accommodations) associated with attending a hearing.

§ 599.513 Hearing procedures.

(a) There is no right to discovery in any proceedings conducted pursuant to this subpart.

(b) The material in the case file pertinent to the issues to be determined by the Hearing Officer is presented by the Chief Counsel or his or her designee.

(c) The Chief Counsel may supplement the case file with information prior to the hearing. A copy of such information will be provided to the party no later than 3 days before the hearing.

(d) At the close of the Chief Counsel's presentation of evidence, the party has the right to examine, respond to and rebut material in the case file and other information presented by the Chief Counsel.

(e) In receiving evidence, the Hearing Officer is not bound by strict rules of evidence. In evaluating the evidence presented, the Hearing Officer must

give due consideration to the reliability and relevance of each item of evidence.

(f) A party may present the testimony of any witness either through a written statement or a personal appearance. If a party wishes to present testimony through a personal appearance, the party is responsible for obtaining that personal appearance, including any costs associated with such appearance. The Hearing Officer may, at his or her discretion, accept a stipulation in lieu of testimony.

(g) At the close of the party's presentation of evidence, the Hearing Officer may allow the introduction of rebuttal evidence that may be presented by the Chief Counsel. The Hearing Officer may allow the party to respond to any such evidence submitted.

(h) The Hearing Officer may take notice of matters which are subject to a high degree of indisputability and are commonly known in the community or are ascertainable from readily available sources of known accuracy. Prior to taking notice of a matter, the Hearing Officer shall give the party an opportunity to show why notice should not be taken. In any case in which notice is taken, the Hearing Officer places a written statement of the matters as to which notice was taken in the record, with the basis for such notice, including a statement that the party consented to notice being taken or a summary of the party's objections.

(i) After the evidence in the case has been presented, the Chief Counsel and the party may present argument on the issues in the case. The party may also request an opportunity to submit a written statement for consideration by the Hearing Officer and for further review. If granted, the Hearing Officer shall allow a reasonable time for submission of the statement and shall specify the date by which it must be received. If the statement is not received within the time prescribed, or within the limits of any extension of time granted by the Hearing Officer, the Hearing Officer prepares the decision in the case.

(j) A verbatim transcript of the hearing will not normally be prepared. A party may, solely at its own expense, cause a verbatim transcript to be made. If a verbatim transcript is made, the party shall submit two copies to the Hearing Officer not later than 15 days of the hearing. The Hearing Officer shall include such transcript in the record.

§ 599.514 Assessment of civil penalties.

(a) Not later than 30 days following the close of the hearing, the Hearing Officer shall issue a written decision on the Notice of Violation, based on the hearing record. The decision shall set forth the basis for the Hearing Officer's assessment of a civil penalty, or decision not to assess a civil penalty. In determining the amount of the civil penalty, the severity of the violation and the intent and history of the party committing the violation shall be taken into account. The assessment of a civil penalty by the Hearing Officer shall be set forth in an accompanying final order.

(b) If the Hearing Officer assesses civil penalties in excess of $100,000.00, the Hearing Officer's decision contains a statement advising the party of the right to an administrative appeal to the Administrator. The party is advised that failure to submit an appeal within the prescribed time will bar its consideration and that failure to appeal on the basis of a particular issue will constitute a waiver of that issue in its appeal before the Administrator.

(c) The filing of a timely and complete appeal to the Administrator of a Hearing Officer's order assessing a civil penalty shall suspend the operation of the Hearing Officer's penalty.

(d) There shall be no administrative appeals of civil penalties of $100,000.00 or less.

§ 599.515 Appeals of civil penalties in excess of $100,000.00.

(a) A party may appeal the Hearing Officer's order assessing civil penalties over $100,000.00 to the Administrator within 21 days of the date of the issuance of the Hearing Officer's order.

(b) The Administrator will affirm the decision of the Hearing Officer unless the Administrator finds that the Hearing Officer's decision was unsupported by the record as a whole.

(c) If the Administrator finds that the decision of the Hearing Officer was

unsupported, in whole or in part, then the Administrator may:

(1) Assess or modify a civil penalty;

(2) Rescind the Notice of Violation; or

(3) Remand the case back to the Hearing Officer for new or additional proceedings.

(d) In the absence of a remand, the decision of the Administrator in an appeal is a final agency action.

§ 599.516 Collection of assessed or compromised civil penalties.

(a) Payment of a civil penalty, whether assessed or compromised, shall be made by check, postal money order, or electronic transfer of funds, as provided in instructions by the agency. A payment of civil penalties shall not be considered a request for a hearing.

(b) The party must remit payment of any assessed civil penalty to NHTSA within 30 days after receipt of the Hearing Officer's order assessing civil penalties or, in the case of an appeal to the Administrator, within 30 days after receipt of the Administrator's decision on the appeal. Failure to make timely payment may result in the institution of appropriate action under the Federal Claims Collection Act, as amended, the regulations issued thereunder, and other applicable law.

(c) The party must remit payment of any compromised civil penalty to NHTSA on the date and under such terms and conditions as agreed to by the party and NHTSA. Failure to pay a compromised civil penalty to NHTSA on the date and under such terms and conditions as agreed to by the party and NHTSA may either result in the institution of appropriate action under the Federal Claims Collection Act, as amended, the regulations issued thereunder, and other applicable law, or NHTSA entering a finding of violation by default and assessing a civil penalty in the amount proposed in the Notice of Violation without processing the violation under the hearing procedures set forth in this part.

§ 599.517 Other sanctions.

The procedures and penalties described in this subpart are not the only procedures and penalties that may apply to someone who violates the CARS Act or submits a false certification required by this rule. Anyone who submits false information on these forms or otherwise violates the CARS Act or this part may not only be subject to the procedures and penalties described in this subpart, but also civil and criminal penalties. Such civil and criminal penalties may include penalties three times any amount falsely claimed to be due from the United States pursuant to the False Claims Act (31 U.S.C. 3729), or imprisonment of up to 5 years and fines of up to $250,000 (18 U.S.C. 1001). In addition, NHTSA may request that the Attorney General seek appropriate injunctive relief to address violations of the CARS Act or this part.

Subpart F—Requirements and Procedures for Exceptions

SOURCE: 74 FR 49340, Sept. 28, 2009, unless otherwise noted.

§ 599.600 Exceptions—applicability and requirements.

(a) *Applicability*. (1) *Eligible Requesters*. To qualify for an exception under this subpart, a requester must be a dealer registered in accordance with the requirements of § 599.200.

(2) *Filing deadline*. A request for an exception must be postmarked no later than October 13, 2009.

(3) *Availability of funds*. An exception shall be approved under this subpart only if Federal funds are available for payment.

(4) *Exclusion*. No exception may be approved for an application for reimbursement that was successfully submitted to the CARS system.

(b) *Threshold requirements*. Subject to the requirements of § 599.600(a), a registered dealer may submit a request for exception and seek reimbursement of a CARS credit under this subpart if the dealer:

(1) Prior to August 24, 2009, 8 pm EDT, completed a qualifying deal meeting the requirements of § 599.300 and § 599.301;

(2) Took ownership and possession of a trade-in vehicle and transferred ownership and possession of a new vehicle to the purchaser; and

(3) Prior to August 25, 2009, 8 pm EDT, attempted to submit an application for reimbursement meeting the requirements of § 599.302, but was prevented from submitting the application for any of the reasons identified in § 599.600(c).

(c) *Exception cases.* A dealer is eligible for an exception if:

(1) *Password rejection.* The dealer's account password was locked out and not reset by NHTSA;

(2) *Transaction rejection.* The application was rejected at submission because the dealer entered a State identification number, a trade-in vehicle VIN, or a new vehicle VIN that was already entered into the CARS program system, but that State identification number, trade-in vehicle VIN, or new vehicle VIN was never used for a CARS deal; or

(3) *Other hardship.* The dealer experienced any other hardship attributable to NHTSA action or inaction that the Administrator determines in his or her discretion should be redressed, consistent with the purposes of the CARS Act.

§ 599.601 Procedures for requesting exception.

(a) *Submission.* A request for exception must be made in writing and mailed by United States mail to the NHTSA Administrator, 1200 New Jersey Ave SE., Washington, DC 20590.

(b) *Contents.* The request must include paper copies of the following materials:

(1) *Explanation of hardship.* A written explanation of a hardship identified in § 599.600(c) that prevented the dealer from submitting its transaction, and the steps the dealer took to contact the agency and timely resolve the issue;

(2) *Proof of hardship.* Documents evidencing that the dealer was unable to complete and submit an application for reimbursement prior to the deadline because of hardship caused by NHTSA. Documents may include copies of correspondence with the agency;

(3) *Documentation of qualifying transaction.* Paper copies of all supporting attachments required by § 599.302(c)(2) which reveal that a qualifying CARS transaction, including the transfer of ownership and possession of the trade-in vehicle to the dealer and the delivery of ownership and possession of the new vehicle to the purchaser, was made prior to August 24, 2009, 8 p.m. EDT; and

(4) *Certifications.* Paper copies of all certifications provided in Appendix A to this part, signed by both the dealer and the purchaser.

(5) *Evidence of prior notice to NHTSA.* Evidence, if any, that the dealer attempted to contact NHTSA prior to August 25, 2009, 8 p.m. EDT, to request assistance with a problem described in § 599.600(c).

§ 599.603 Disposition of requests for exception.

(a) *In general.* Upon receipt of the request for exception, the agency will review the request to determine whether the exception should be granted and approved for payment.

(b) *Deciding official.* The NHTSA Administrator or his or her designee shall serve as the Deciding Official for all determinations under this subpart.

(c) *Incomplete requests.* A request for exception that fails to include all of the documents required under this subpart may be rejected without further review.

(d) *Denied requests.* If the Deciding Official denies the request, the requester will be informed in writing of the reasons for the denial of the request.

(e) *Granted requests.* If the Deciding Official grants the request, the requester will be notified by electronic mail, at the e-mail address identified in § 599.200(c)(2)(iii), and the requester's application for reimbursement will be processed for payment by the agency as a qualifying transaction in accordance with § 599.304.

(f) *No appeals.* There are no appeals from the Deciding Official's decision.

APPENDIX A TO PART 599—SUMMARY OF SALE/LEASE AND CERTIFICATIONS

OMB No. 2127-0660
Expiration Date: 01/31/2010

NHTSA www.nhtsa.gov

Summary of Sale/Lease & Certifications Form

CARS car allowance rebate system

SUMMARY OF SALE OR LEASE

Date of Sale or Lease	
Purchaser Name(s)	
Purchaser Address	
Purchase or Lease (please specify)	
Make	
Model	
Model Year	
New Vehicle VIN	
Trade-In Vehicle VIN	
New Vehicle Base MSRP	
CARS Credit Applied ($3,500 or $4,500)	
Dealer's Best Estimate of Trade-In Vehicle Scrappage Value	
Dealer Rebate(s) or Discount(s) (please specify; if none, enter "none.")	
Manufacturer Rebate(s) or Discount(s) (please specify; if none, enter "none.")	
Other available Federal, State, or local incentive(s) or State-issued voucher(s) (please specify; if none, enter "none.")	
Other Rebate(s) or Discount(s) (please specify; if none, enter "none.")	

WARNING

This is a legal document that contains certifications under penalty of law. There are significant civil and criminal penalties for submitting false information. Please read each certification and ensure that the information that you are certifying by signing this document is, to the best of your knowledge and belief, true, accurate, and complete.

DEALER CERTIFICATIONS

The person signing this document as "Dealer" certifies under penalty of law that:

Registration in the CARS Program

- The dealer has been approved as a registered dealer under the CARS program.
- The dealer has a currently active business license under State law to operate a new automobile dealership.
- The dealer has a currently active franchise agreement with an original equipment manufacturer to sell new automobiles.

Summary of Sale or Lease

- The summary of sale or lease set forth above is true and correct.

Purchaser and Trade-In Vehicle Eligibility for the CARS Program

- I have verified the identity of the person signing this document under "Purchaser" (hereinafter simply "Purchaser").
- I have verified that the trade-in vehicle is in drivable condition, and I or an employee under my direction or supervision has operated the trade-in vehicle to confirm that the trade-in vehicle is in drivable condition.
- I have verified that the trade-in vehicle has been continuously insured for a period of not less than one (1) year prior to the date of this transaction (not applicable to trade-in vehicles registered in New Hampshire or Wisconsin).
- I have verified that the Purchaser has been the registered owner of the trade-in vehicle continuously for a period of not less than one (1) year prior to the date of this transaction.
- I have observed the trade-in vehicle's date of manufacture (both month and year) as it appears on the trade-in vehicle's safety standard certification label, and have verified that the trade-in vehicle was manufactured less than 25 years before the date of the trade-in.
- I have verified that the trade-in vehicle's fuel economy is eligible for the CARS program.

New Vehicle Eligibility for the CARS Program

- The new vehicle is being purchased or, in the case of a lease, leased for a period of not less than five (5) years.
- I have verified that the CARS program credit amount requested (i.e., either $3,500.00 or $4,500.00, as applicable) corresponds to the difference between the trade-in vehicle's fuel economy and the new vehicle's fuel economy under the requirements of the CARS program.
- The new vehicle has a base manufacturer's suggested retail price (MSRP) as shown on the Monroney label affixed to the new vehicle of $45,000 or less (exclusive of any accessories, optional equipment, taxes or destination charges).

Transaction Conforms to the Requirements of the CARS Program

- I have reduced the price of the new vehicle that is being purchased or leased by the CARS Program credit amount requested (i.e., either $3,500.00 or $4,500.00, as applicable).

- I have disclosed to the Purchaser the best estimate of the scrappage value of the trade-in vehicle.
- I have retained no more than $50.00 of the scrappage value as payment for any of the dealer's administrative costs in connection with this CARS transaction.
- I have not charged the Purchaser any additional fees for participating in the CARS program in this transaction.
- I have applied the credit under the CARS program in addition to any other rebate or discount advertised by the dealer or offered by the manufacturer for the new vehicle, and have not used the CARS program credit to offset any such other rebate or discount.
- I have not reduced the value of the CARS program credit amount requested (i.e., either $3,500.00 or $4,500.00, as applicable) by any other available Federal, State, or local incentive or a State-issued voucher for the purchase or lease of a new fuel efficient automobile.

Disposal of the Trade-in Vehicle

- The trade-in vehicle has not been, and will not be, sold, leased, exchanged or otherwise disposed of for use as an automobile in the United States or in any other country.
- As a condition of the government's payment of the credit to me, (a) I have disabled the engine following the procedures of the CARS Program; or (b) I will store the trade-in vehicle at the dealership or property owned by or under the control of the dealership until the engine is disabled by me, and will disable the engine following the procedures of the CARS Program not more than seven calendar days after receiving payment by the government for the transaction and prior to transferring possession of the trade-in vehicle; or, (c) if this transaction occurred prior to July 24, 2009 and the trade-in vehicle is no longer in my possession, then I have either located the vehicle, disabled the engine following the procedures of the CARS Program and hereby certify that I have done so, or I am submitting to NHTSA under Miscellaneous Documents a sworn affidavit from a disposal facility that the engine block has been crushed or shredded.
- I have transferred or will transfer the trade-in vehicle, including the engine block, to either: (a) a CARS program participating disposal facility that will crush or shred the trade-in vehicle; or, (b) to a participating salvage auction that will transfer the vehicle to such a disposal facility.
- I have provided the disposal facility and/or salvage auction information and written notice that it is responsible for the removal and appropriate disposition of refrigerants, antifreeze, lead products, mercury switches, and such other toxic or hazardous vehicle components prior to the crushing or shredding of an eligible trade-in vehicle, in accordance with all applicable Federal and State requirements.

PURCHASER CERTIFICATIONS

All persons signing this document as "Purchaser" certifies under penalty of law that:

Summary of Sale or Lease

- The summary of sale or lease set forth above is true and correct.

Purchaser and Trade-In Vehicle Eligibility for the CARS Program

- The information I have provided to the dealer verifying my identity is true and correct.
- I have not previously participated in the CARS program.
- The trade-in vehicle is in drivable condition, and an employee of the dealer has operated the trade-in vehicle to confirm that the trade-in vehicle is in drivable condition.

- The trade-in vehicle has been continuously insured for a period of not less than one (1) year prior to the date of this transaction (not applicable to trade-in vehicles registered in New Hampshire or Wisconsin).
- I have been the registered owner of the trade-in vehicle continuously for a period of not less than one (1) year prior to the date of this transaction.
- The trade-in vehicle was manufactured less than 25 years before the date of this transaction.
- The trade-in vehicle's fuel economy is eligible for the CARS program.
- The trade-in vehicle has not been a part of any previous CARS program transaction.

I certify under penalty of law that:

- ***I have authority to execute this document,***
- ***I have read each of the foregoing certifications,***
- ***I understand that payment of the CARS program credit amount is conditioned on compliance with these certifications,***
- ***This document, and all attachments, were either prepared by me or prepared under my direction or supervision,***
- ***The information set forth in this document, and all attachments, is, to the best of my knowledge and belief, true, accurate, and complete,***
- ***I am aware that there are significant penalties for submitting false information, including the possibility of civil penalties under the CARS program, suspension or revocation of continued participation in the CARS program, as well as fines and/or imprisonment.***

DATE: _____, 2009 DEALER

_____
(signature)

_____
(print name)

_____
(title)

_____
(contact phone and e-mail)

DATE: _____, 2009 PURCHASER

_____
(signature)

_____
(print name)

DATE: _____, 2009

PURCHASER (ADDITIONAL) (if any)

_____
(signature)

_____
(print name)

Privacy Act Statement

This notice is provided pursuant to the Privacy Act of 1974, 5 USC § 552a: This information is solicited under the authority of Public Law 111-32, 123 Stat. 1859. Furnishing the information is voluntary, but failure to provide all or part of the information may result in disapproval of your request for a credit on this purchase or lease transaction under the Cars Program. The principal purposes for collecting the information are to determine if purchase or lease transactions are eligible for credits under the CARS Program, to ensure proper disposal of trade-in vehicles, to prevent, identify and penalize fraud in connection with the Program, and to update an existing government database of Vehicle Identification Numbers. If you complete the optional survey, the survey information will be used to report to Congress on the Program. Other routine uses are published in the Federal Register at 65 F.R. 19476 (April 11, 2000), available at: www.dot.gov/privacy.

Paperwork Reduction Act Burden Statement

A federal agency may not conduct or sponsor, and a person is not required to respond to, nor shall a person be subject to a penalty for failure to comply with a collection of information subject to the requirements of the Paperwork Reduction Act unless that collection of information displays a current valid OMB Control Number. The OMB Control Number for this information collection is 2127-0660. Public reporting for this collection of information is estimated to be approximately 17 minutes per response for dealers, 11 minutes for buyers, including the time for reviewing instructions, completing and reviewing the collection of information. All responses to this collection of information are mandatory. Send comments regarding this burden estimate or any other aspect of this collection of information, including suggestions for reducing this burden to: Information Collection Clearance Officer, National Highway Traffic Safety Administration, 1200 New Jersey Ave, S.E., Washington, DC, 20590.

NHTSA Form 1072

[74 FR 38976, Aug. 5, 2009]

APPENDIX B TO PART 599—ENGINE DISABLEMENT PROCEDURES FOR THE CARS PROGRAM

Engine Disablement Procedures for the CARS Program

THIS PROCEDURE IS NOT TO BE USED BY THE VEHICLE OWNER

Perform the following procedure to disable the vehicle engine.

Since the vehicle will not be drivable after this procedure is performed, consider where the procedure will be performed and how the vehicle will be moved after the procedure is complete.

1. Obtain solution of 40% sodium silicate/60% water. (The Sodium Silicate (SiO2/Na2O) used in the solution must have a weight ratio of 3.0 or greater.)
2. Drain engine oil for environmentally appropriate disposal.
3. Install the oil drain plug.
4. Pour enough solution in the engine through the oil fill for the oil pump to circulate the solution throughout the engine. Start by adding 2 quarts of the solution, which should be sufficient in most cases.
   CAUTION: Wear goggles and gloves. Appropriate protective clothing should be worn to prevent silicate solution from coming into contact with the skin.
5. Replace the oil fill cap.
6. Start the engine.
7. Run engine at approximately 2000 rpm (for safety reasons do not operate at high rpm) until the engine stops. (Typically the engine will operate for 3 to 7 minutes. As the solution starts to affect engine operation, the operator will have to apply more throttle to keep the engine at 2000 rpm.)
8. Allow the engine to cool for at least 1 hour.
9. With the battery at full charge or with auxiliary power to provide the power of a fully charged battery, attempt to start the engine.
10. If the engine will not operate at idle, the procedure is complete.
11. If the engine will operate at idle, repeat steps 6 through 10 until the engine will no longer idle.
12. Attach a label to the engine that legibly states the following:

    This engine is from a vehicle that is part of the Car Allowance Rebate System (CARS). It has significant internal damage caused by operating the engine with a sodium silicate solution (liquid glass) instead of oil.

APPENDIX C TO PART 599—ELECTRONIC TRANSACTION SCREEN

CARS iSupplier Portal

Home Logout Preferences

Home | Finance

Create Invoices | View Invoices

Details — Legal Information — Review and Submit

Create Invoice: Details

* Indicates required field

TIP % sign is the wildcard character to search on in any List of Values

Cancel | Step 1 of 3 | Next

Dealership Information

* Name [redacted]

* Remit To

Address

* Remit To Bank Account

Invoice

* Invoice Number

TIP Do not enter any special characters eg. $ & @

* Invoice Date 21-Jul-2009

(example: 21-Jul-2009)

* Currency USD

Invoice Description

* Sale Date

* Disposal Status

* Disposal Facility ID

* Disposal Facility Contact Info

* Purchaser Full Name

* Purchaser Full Address

* Purchaser State ID Number

Co-Owner Purchaser State ID Number

* Sales Type

Attachment None | Add

***Amount**

TIP Do not enter any special characters. (eg. & % $) for VIN

* Trade-in VIN

* Trade-in Vehicle Category

* Trade-in Vehicle Description

* Trade-In Title State

* Trade-In Registration State

* Trade-In Registration Start Date

* Trade-In Registration Expiration Date

Trade-In Insurance Start Date

Trade-In Flagged Date

* Trade-In Odometer Reading

* New Vehicle VIN

* New Vehicle Category

* New Vehicle Description

* New Vehicle Base MSRP

Cancel | Step 1 of 3 | Next

Home Finance Home Logout Preferences

Privacy Statement

Copyright (c) 2006, Oracle. All rights reserved.

APPENDIX D TO PART 599—CARS PURCHASER SURVEY

CARS car allowance rebate system

Survey of Consumer Response to
(Commonly known as 'Cash for Clunkers')

NHTSA www.nhtsa.gov

OMB 2127-0659 Exp. 1/31/2009

Please answer the following 3 questions regarding your trade-in transaction. Your answers are for program evaluation purposes only and will not influence your eligibility in any way. Please put an X in the box by the appropriate answer.

Question #1: If you were not offered the CARS program trade-in incentive, would you still have traded in your current vehicle to purchase a new or used vehicle this month?

☐ a) Yes

☐ b) No

If no, when were you planning to trade-in, sell or dispose of your vehicle?

☐ Within the next year	☐ 4 years	☐ 8 years
☐ In about 1 year	☐ 5 years	☐ 9 years
☐ 2 years	☐ 6 years	☐ 10 years
☐ 3 years	☐ 7 years	☐ More than 10 years

Question # 2: If you were not offered the CARS program trade-in incentive, when you disposed of this vehicle, would you have purchased another vehicle?

☐ a) No

☐ b) Yes, a new vehicle (Please select one type below)

☐ c) Yes, a used vehicle (Please select one type below)

☐ a) **a subcompact car** (for example a Honda Fit, or a Toyota Yaris, etc.)
☐ b) **a compact car** (ex. Ford Focus, Nissan Sentra, Toyota Corolla, Honda Civic, etc.)
☐ c) **a mid-sized car** (ex. Chevrolet Malibu, Nissan Altima, Toyota Camry, etc.)
☐ d) **a large car** (ex. Chrysler 300, Ford Crown Victoria, etc.)
☐ e) **a small SUV** (ex. Honda CR-V, Ford Escape, etc.)
☐ f) **a mid-sized SUV** (ex. Ford Explorer, Honda Pilot, etc.)
☐ g) **a large SUV** (ex. Chevrolet Suburban, Ford Expedition, etc.)
☐ h) **a small pickup** (ex. Ford Ranger, etc.)
☐ i) **a mid-sized pickup** (ex. Dodge Dakota, Toyota Tacoma, etc.)
☐ j) **a large pickup** (ex. Chevrolet Silverado, Ford F-150, etc.)
☐ k) **a full sized passenger van** (ex. Ford E-Series, Chevrolet Express, etc.)
☐ l) **a full sized cargo van** (ex. Chevrolet Express, Dodge Sprinter, etc.)
☐ m) **a mini-van** (ex. Toyota Sienna, Dodge Caravan, etc.)
☐ n) **other type** (specify) _____

Question #3: What is your best estimate of the number of miles you drove the traded-in vehicle during the past 12 months?

☐ 0 – 2,499	☐ 7,500 – 9,999	☐ 15,000 – 17,499
☐ 2,500 – 4,999	☐ 10,000 – 12,499	☐ 17,500 – 19,999
☐ 5,000 – 7,499	☐ 12,500 – 14,999	☐ 20,000 or more

Thank you for participating in the CARS Initiative Consumer Response Survey!
Please contact the CARS Hotline at (866)-CAR-7891 or TTY at (800)-424-9153 if you wish to provide any comments.

APPENDIX E TO PART 599—DISPOSAL FACILITY CERTIFICATION FORM

Appendix E to Part 599 – Disposal Facility Certification Form

OMB No. 2127-0658
Expiration Date: 01/31/2010

NHTSA www.nhtsa.gov

Disposal Facility Certification Form

CARS car allowance rebate system

Disposal Facility Information		
CARS Invoice No. (if available)		
NHTSA Disposal Facility Identification No. (if assigned)		
Legal Business Name		
Doing Business As (DBA)/Common Name (if different from Legal Business Name)		
Address (including Street, City, State, ZIP Code)		
Trade-In Vehicle Information		
Make	Model	Model Year
Trade-In Vehicle VIN	Odometer Mileage	
Dealer or Salvage Auction Transferring Trade-In Vehicle Information		
Legal Business Name		
Doing Business As (DBA)/Common Name (if different from Legal Business Name)		
Address (including Street, City, State, ZIP Code)		
Check one: [ ] Dealer [ ] Salvage Auction	Contact Name and Title	Contact Phone and Email
Address (including Street, City, State, ZIP Code)	Date this Facility Received the Trade-In Vehicle from Dealer or Salvage Auction	

WARNING

This is a legal document that contains certifications under penalty of law. There are significant civil and criminal penalties for submitting false information. Please read each certification and ensure that the information that you are certifying by

signing this document is, to the best of your knowledge and belief, true, accurate, and complete.

The person signing this document certifies under penalty of law that:

- This facility appears on the CARS program Disposal Facility List.
- This facility participates in the End of Life Vehicle Solutions (ELVS) program. (Excluding facilities located in Maine or a U.S. territory).
- This facility is capable of crushing or shredding the trade-in vehicle, either with its own equipment or by use of a mobile crusher.
- This facility meets all applicable Federal and State laws.
- This facility has a currently active State license to operate as a disposal facility in the State where it is located.
- This facility received the trade-in vehicle bearing the above listed Vehicle Identification Number (VIN) on the date listed above from the dealer or salvage auction listed above.
- I, or an employee of this facility under my direction or supervision, will report to the National Motor Vehicle Title Information System (NMVTIS) the status of the trade-in vehicle as a scrap vehicle not more than seven (7) days after the above-listed date of receipt.
- The trade-in vehicle has not been, and will not be, sold, leased, exchanged or otherwise disposed of for use as an automobile in the United States or in any other country.
- This facility will not transfer the trade-in vehicle to another disposal facility prior to its crushing or shredding.
- This facility will not sell or transfer the trade-in vehicle's engine block and drive train (unless with respect to the drive train, the transmission, drive shaft, or rear end are sold as separate parts) at any time prior to its crushing or shredding.
- I, or an employee of this facility under my direction or supervision, will dispose of refrigerants, antifreeze, lead products, mercury switches, and such other toxic or hazardous vehicle components prior to the crushing or shredding of the trade-in vehicle, in accordance with all applicable Federal and State requirements.
- If this facility participates in ELVS, I, or an employee of this facility under my direction or supervision, will return all mercury switches in accordance with the procedures of the National Vehicle Mercury Switch Recovery Program (NVMSRP).
- I, or an employee of this facility under my direction or supervision, will crush or shred (or cause to be crushed or shredded on our premises), the trade-in vehicle within one-hundred eighty (180) days after the above-listed date of receipt.
- I, or an employee of this facility under my direction or supervision, will report to NMVTIS that this facility crushed or shredded the trade-in vehicle not more than seven (7) days after the date of crushing or shredding. (Note: The CARS program does not require that this facility, or any other entity which may subsequently receive the crushed trade-in vehicle, subsequently submit to NHTSA a CARS program Disposal Facility Certification Form, nor does it require that this facility, or any other entity which may subsequently receive the crushed trade-in vehicle, report to NMVTIS that the crushed trade-in vehicle has been shredded).

I certify under penalty of law that:

- ***I have authority to execute this document,***
- ***I have read each of the foregoing certifications,***
- ***This document, and any attachments, were either prepared by me or prepared under my direction or supervision,***
- ***The information set forth in this document, and any attachments, is, to the best of my knowledge and belief, true, accurate, and complete,***

- ***I am aware that there are significant penalties for submitting false information, including the possibility of civil penalties under the CARS program, suspension or revocation of continued participation in the CARS program, as well as fines and/or imprisonment.***

DATE: _____, 2009

DISPOSAL FACILITY

_____

(signature)

_____

(print name)

_____

(title)

_____

(contact phone and e-mail)

Privacy Act Statement

This notice is provided pursuant to the Privacy Act of 1974, 5 USC § 552a: This information is solicited under the authority of Public Law 111-32, 123 Stat. 1859. Furnishing the information is voluntary, but failure to provide all or part of the information may result in disapproval of a request for a credit on this purchase or lease transaction under the Cars Program. The principal purposes for collecting the information are to ensure proper disposal of trade-in vehicles, to prevent, identify and penalize fraud in connection with the Program, and to update an existing government database of Vehicle Identification Numbers. Other routine uses are published in the Federal Register at 65 F.R. 19476 (April 11, 2000), available at: www.dot.gov/privacy.

Paperwork Reduction Act Burden Statement

A federal agency may not conduct or sponsor, and a person is not required to respond to, nor shall a person be subject to a penalty for failure to comply with a collection of information subject to the requirements of the Paperwork Reduction Act unless that collection of information displays a current valid OMB Control Number. The OMB Control Number for this information collection is 2127-0658. Public reporting for this collection of information is estimated to be approximately 5 minutes per response, including the time for reviewing instructions, completing and reviewing the collection of information. All responses to this collection of information are mandatory. Send comments regarding this burden estimate or any other aspect of this collection of information, including suggestions for reducing this burden to: Information Collection Clearance Officer, National Highway Traffic Safety Administration, 1200 New Jersey Ave, S.E., Washington, DC, 20590.

NHTSA Form 1073

[74 FR 38976, Aug. 5, 2009]

APPENDIX F TO PART 599—SALVAGE AUCTION CERTIFICATION FORM

NHTSA www.nhtsa.gov

Salvage Auction Certification Form

OMB 2127-0658 Exp. 1/31/2009

CARS car allowance rebate system

Salvage Auction Information		
CARS Invoice No. (if available)		
Legal Business Name		
Doing Business As (DBA)/Common Name (if different from Legal Business Name)		
Address (including Street, City, State, ZIP Code)		
Trade-In Vehicle Information		
Make	Model	Model Year
Trade-In Vehicle VIN	Odometer Mileage	
Dealer Transferring Trade-In Vehicle Information		
Legal Business Name		
Doing Business As (DBA)/Common Name (if different from Legal Business Name)		
Address (including Street, City, State, ZIP Code)		
Contact Name and Title	Contact Phone and Email	
Address (including Street, City, State, ZIP Code)	Date this Salvage Auction Received the Trade-In Vehicle from Dealer	

WARNING

This is a legal document that contains certifications under penalty of law. There are significant civil and criminal penalties for submitting false information. Please read each certification and ensure that the information that you are certifying by signing this document is, to the best of your knowledge and belief, true, accurate, and complete.

APPENDIX F TO PART 599—SALVAGE AUCTION CERIFICATION FORM

The person signing this document certifies under penalty of law that:

- This facility meets all applicable Federal and State laws.
- This facility has a currently active State license to conduct business as a salvage auction in the State where it is located.
- This facility received the trade-in vehicle bearing the above listed Vehicle Identification Number (VIN) on the date listed above from the dealer listed above.
- I, or an employee of this facility under my direction or supervision, will report to the National Motor Vehicle Title Information System (NMVTIS) the status of the trade-in vehicle within three (3) days after the date the dealer consigns the trade-in vehicle, or prior to auction (whichever is earlier).
- This facility will limit any auction sale of the trade-in vehicle solely to disposal facilities that appear on the CARS program Disposal Facility List.
- The trade-in vehicle has not been, and will not be, sold, leased, exchanged or otherwise disposed of for use as an automobile in the United States or in any other country.
- This facility will not remove any parts from the trade-in vehicle.
- This facility will not transfer the trade-in vehicle at any time prior to its sale at auction, and then only to a disposal facility that appears on the CARS program Disposal Facility List.

I certify under penalty of law that:

- ***I have authority to execute this document,***
- ***I have read each of the foregoing certifications,***
- ***This document, and any attachments, were either prepared by me or prepared under my direction or supervision,***
- ***The information set forth in this document, and any attachments, is, to the best of my knowledge and belief, true, accurate, and complete,***
- ***I am aware that there are significant penalties for submitting false information, including the possibility of civil penalties under the CARS program, suspension or revocation of continued participation in the CARS program, as well as fines and/or imprisonment.***

DATE: _____, 2009

SALVAGE AUCTION

_____
(signature)

_____
(print name)

_____
(title)

_____
(contact phone and e-mail)

Privacy Act Statement

This notice is provided pursuant to the Privacy Act of 1974, 5 USC § 552a: This information is solicited under the authority of Public Law 111-32, 123 Stat. 1859. Furnishing the information is voluntary, but failure to provide all or part of the information may result in disapproval of a request for a credit on this purchase or lease transaction under the Cars Program. The principal purposes for collecting the information are to ensure proper disposal of trade-in vehicles, to prevent, identify and penalize fraud in connection with the Program, and to update an existing government database of Vehicle Identification Numbers. Other routine uses are published in the Federal Register at 65 F.R. 19476 (April 11, 2000), available at: www.dot.gov/privacy.

Paperwork Reduction Act Burden Statement

A federal agency may not conduct or sponsor, and a person is not required to respond to, nor shall a person be subject to a penalty for failure to comply with a collection of information subject to the requirements of the Paperwork Reduction Act unless that collection of information displays a current valid OMB Control Number. The OMB Control Number for this information collection is 2127-0658. Public reporting for this collection of information is estimated to be approximately XX minutes per response, including the time for reviewing instructions, completing and reviewing the collection of information. All responses to this collection of information are mandatory. Send comments regarding this burden estimate or any other aspect of this collection of information, including suggestions for reducing this burden to: Information Collection Clearance Officer, National Highway Traffic Safety Administration, 1200 New Jersey Ave, S.E., Washington, DC, 20590.

CHAPTER VI—FEDERAL TRANSIT ADMINISTRATION, DEPARTMENT OF TRANSPORTATION

Part		*Page*
600	[Reserved]	
601	Organization, functions, and procedures	403
604	Charter service	411
605	School bus operations	439
609	Transportation for elderly and handicapped persons	447
611	Major capital investment projects	449
613	Planning assistance and standards	457
614	Transportation infrastructure management	457
622	Environmental impact and related procedures	458
624	Clean Fuels Grant Program	459
630	National Transit Database	461
633	Project management oversight	463
639	Capital leases	466
640	Credit assistance for surface transportation projects	470
655	Prevention of alcohol misuse and prohibited drug use in transit operations	470
659	Rail fixed guideway systems; State safety oversight	483
661	Buy America requirements	493
663	Pre-award and post-delivery audits of rolling stock purchases	503
665	Bus testing	507

PART 600 [RESERVED]

PART 601—ORGANIZATION, FUNCTIONS, AND PROCEDURES

Subpart A—General Provisions

Sec.
601.1 Purpose.
601.2 Organization of the administration.
601.3 General responsibilities.
601.4 Responsibilities of the Administrator.

Subpart B—Public Availability of Information

601.10 Sources of information.

Subpart C—Rulemaking Procedures

601.20 Applicability.
601.21 Definitions.
601.22 General.
601.23 Initiation of rulemaking.
601.24 Contents of notices of proposed rulemaking.
601.25 Participation by interested persons.
601.26 Petitions for extension of time to comment.
601.27 Contents of written comments.
601.28 Consideration of comments received.
601.29 Additional rulemaking proceedings.
601.30 Hearings.
601.31 Adoption of final rules.
601.32 Petitions for rulemaking or exemptions.
601.33 Processing of petition.
601.34 Petitions for reconsideration.
601.35 Proceedings on petitions for reconsideration.
601.36 Procedures for direct final rulemaking.

Subpart D—Emergency Procedures for Public Transportation Systems

601.40 Applicability.
601.41 Petitions for relief.
601.42 Emergency relief docket.
601.43 Opening the docket.
601.44 Posting to the docket.
601.45 Required information.
601.46 Processing of petitions.
601.47 Review procedures.

AUTHORITY: 5 U.S.C. § 552; 49 U.S.C. 5334; 49 U.S.C. 1657, 1659; Reorganization Plan No. 2 of 1968 (82 Stat. 1369); 49 CFR 1.51.

SOURCE: 70 FR 67318, Nov. 4, 2005, unless otherwise noted.

Subpart A—General Provisions

§ 601.1 Purpose.

This part describes the organization of the Federal Transit Administration (''FTA''), an operating administration within the U.S. Department of Transportation. This part also describes general responsibilities of the various offices of which FTA is comprised. In addition, this part describes the sources and locations of available FTA program information, and provides information regarding FTA's rulemaking procedures.

§ 601.2 Organization of the administration.

(a) The headquarters organization of FTA is comprised of eight principal offices which function under the overall direction of the Federal Transit Administrator (''the Administrator'') and Deputy Administrator. These offices are:

(1) Office of Administration.

(2) Office of Budget and Policy.

(3) Office of Chief Counsel.

(4) Office of Civil Rights.

(5) Office of Communications and Congressional Affairs.

(6) Office of Planning and Environment.

(7) Office of Program Management.

(8) Office of Research, Demonstration and Innovation.

(b) FTA has ten regional offices, each of which function under the overall direction of the Administrator and Deputy Administrator, and under the general direction of a Regional Administrator. In addition, FTA has established a Lower Manhattan Recovery Office, which is under the general direction of the Director for this office.

Region/States	Office/address	Telephone No.
I. Connecticut, Maine, Massachusetts, New Hampshire, Rhode Island, and Vermont.	FTA Regional Administrator, Kendall Square, 55 Broadway, Suite 920, Cambridge, MA 02142–1093.	(617) 494–2055
II. New York, New Jersey, and U.S. Virgin Islands ..	FTA Regional Administrator, One Bowling Green, Room 429, New York, NY 10014–1415.	(212) 668–2170
III. Delaware, District of Columbia, Maryland, Pennsylvania, Virginia, and West Virginia.	FTA Regional Administrator, 1760 Market Street, Suite 500, Philadelphia, PA 19103–4124.	(215) 656–7100

Region/States	Office/address	Telephone No.
IV. Alabama, Florida, Georgia, Kentucky, Mississippi, North Carolina, Puerto Rico, South Carolina, and Tennessee.	FTA Regional Administrator, Atlanta Federal Center, Suite 17T50, 61 Forsyth Street, SW., Atlanta, GA 30303.	(404) 562–3500
V. Illinois, Indiana, Minnesota, Michigan, Ohio, and Wisconsin.	FTA Regional Administrator, 200 West Adams Street, Suite 320, Chicago, IL 60606.	(312) 353–2789
VI. Arkansas, Louisiana, New Mexico, Oklahoma, and Texas.	FTA Regional Administrator, 819 Taylor Street, Room 8A36, Fort Worth, TX 76102.	(817) 978–0550
VII. Iowa, Kansas, Missouri, and Nebraska	FTA Regional Administrator, 901 Locust Street, Suite 404, Kansas City, MO 64106.	(816) 329–3920
VIII. Colorado, Montana, North Dakota, South Dakota, Utah, and Wyoming.	FTA Regional Administrator, Dept. of Transportation, FTA, 12300 W. Dakota Ave., Suite 310, Lakewood, CO 80228–2583.	(720) 963–3300
IX. Arizona, California, Hawaii, Nevada, Guam, American Samoa, and Northern Mariana Islands.	FTA Regional Administrator, 201 Mission Street, Suite 310, San Francisco, CA 94105.	(415) 744–3133
X. Alaska, Idaho, Oregon, and Washington	FTA Regional Administrator, Jackson Federal Building, 915 Second Avenue, Suite 3142, Seattle, WA 98174–1002.	(206) 220–7954
Lower Manhattan Recovery Office	FTA LMRO Director, One Bowling Green, Room 436, New York, NY 10004.	(212) 668–1770

§ 601.3 General responsibilities.

The general responsibilities of each of the offices which comprise the headquarters organization of FTA are:

(a) *Office of Administration*. Directed by an Associate Administrator for Administration, this office develops and administers comprehensive programs to meet FTA's resource management and administrative support requirements in the following areas: Organization and management planning, information resources management, human resources, contracting and procurement, and administrative services.

(b) *Office of Budget and Policy*. Directed by an Associate Administrator for Budget and Policy, this office is responsible for policy development and performance measurement, strategic and program planning, program evaluation, budgeting, and accounting. The office provides policy direction on legislative proposals and coordinates the development of regulations. The office formulates and justifies FTA budgets within the Department of Transportation, to the Office of Management and Budget, and Congress. The office establishes apportionments and allotments for program and administrative funds, ensures that all funds are expended in accordance with Administration and congressional intent, and prepares and coordinates statutory reports to Congress. The office coordinates with and supports the Department of Transportation Chief Financial Officer on all FTA accounting and financial management matters. This office also serves as the audit liaison in responding to the Office of the Inspector General and the Government Accountability Office.

(c) *Office of Chief Counsel*. Directed by a Chief Counsel, this office provides legal advice and support to the Administrator and FTA management. The office is responsible for reviewing development and management of FTA-sponsored projects; representing the Administration before civil courts and administrative agencies; drafting and reviewing legislation and regulations to implement the Administration's programs; and working to ensure that the agency upholds the highest ethical standards. The office coordinates with and supports the U.S. Department of Transportation's General Counsel on FTA legal matters.

(d) *The Office of Civil Rights*. Directed by a Director for Civil Rights, this office ensures full implementation of civil rights and equal opportunity initiatives by all recipients of FTA assistance, and ensures nondiscrimination in the receipt of FTA benefits, employment, and business opportunities. The office advises and assists the Administrator and other FTA officials in ensuring compliance with applicable civil rights regulations, statutes and directives, including but not limited to the Americans with Disabilities Act of 1990 (ADA), the Civil Rights Act of 1964, Disadvantaged Business Enterprise (DBE) participation, and Equal Employment Opportunity, within FTA and in the conduct of Federally-assisted

public transportation projects and programs. The office monitors the implementation of and compliance with civil rights requirements, investigates complaints, conducts compliance reviews, and provides technical assistance to recipients of FTA assistance and members of the public.

(e) *Office of Communications and Congressional Affairs*. Directed by an Associate Administrator for Communications and Congressional Affairs, this office is the agency's lead office for media relations, public affairs, and Congressional relations, providing quick response support to the agency, the public, and Members of Congress on a daily basis. The office distributes information about FTA programs and policies to the public, the transit industry, and other interested parties through a variety of media. This office also coordinates the Administrator's public appearances and is responsible for managing correspondence and other information directed to and issued by the Administrator and Deputy Administrator.

(f) *Office of Planning and Environment*. Directed by an Associate Administrator for Planning and Development, this office administers a national program of planning assistance that provides funding, guidance, and technical support to State and local transportation agencies. In partnership with the Federal Highway Administration (FHWA), this office oversees a national program of planning assistance and certification of metropolitan and statewide planning organizations, implemented by FTA Regional Offices and FHWA Divisional Offices. The office provides national guidance and technical support in emphasis areas including planning capacity building, financial planning, transit oriented development, joint development, project cost estimation, travel demand forecasting, and other technical areas. This office also oversees the Federal environmental review process as it applies to transit projects throughout the country, including implementation of the National Environmental Policy Act (NEPA), the Clean Air Act, and related laws and regulations. The office provides national guidance and oversight of planning and project development for proposed major transit capital fixed guideway projects, commonly referred to as the New Starts program. In addition, this office is responsible for the evaluation and rating of proposed projects based on a set of statutory criteria, and applies these ratings as input to the Annual New Starts Report and funding recommendations submitted to Congress, as well as for FTA approval required for projects to advance into preliminary engineering, final design, and full funding grant agreements.

(g) *Office of Program Management*. Directed by an Associate Administrator for Program Management, this office administers a national program of capital and operating assistance by managing financial and technical resources and by directing program implementation. The office coordinates all grantee directed guidance, in the form of circulars and other communications, develops and distributes procedures and program guidance to assist the field staff in grant program administration and fosters responsible stewardship of Federal transit resources by facilitating and assuring consistent grant development and implementation nationwide (Statutory, Formula, Discretionary and Earmarks). This office manages the oversight program for agency formula grant programs and provides national expertise and direction in the areas of capital construction, rolling stock, and risk assessment techniques. It also assists the transit industry and State and local authorities in providing high levels of safety and security for transit passengers and employees through technical assistance, training, public awareness, drug and alcohol testing and state safety oversight.

(h) *Office of Research, Demonstration, and Innovation*. Directed by an Associate Administrator for Research, Demonstration and Innovation, this office provides transit industry leadership in delivery of solutions that improve public transportation. The office undertakes research, development, and demonstration projects that help to increase ridership; improve capital and operating efficiencies; enhance safety and emergency preparedness; and better protect the environment and promote energy independence. The office

leads FTA programmatic efforts under the National Research Programs (49 U.S.C. 5314).

§ 601.4 Responsibilities of the Administrator.

The Administrator is responsible for the planning, direction and control of the activities of FTA and has authority to approve Federal transit grants, loans, and contracts. The Deputy Administrator is the ''first assistant'' for purposes of the Federal Vacancies Reform Act of 1998 (Pub. L. 105–277) and shall, in the event of the absence or disability of the Administrator, serve as the Acting Administrator, subject to the limitations in that Act. In the event of the absence or disability of both the Administrator and the Deputy Administrator, officials designated by the agency's internal order on succession shall serve as Acting Deputy Administrator and shall perform the duties of the Administrator, except for any non-delegable statutory and/or regulatory duties.

Subpart B—Public Availability of Information

§ 601.10 Sources of information.

(a) *FTA guidance documents.* (1) Circulars and other guidance/policy information are available on FTA's Web site: *http://www.fta.dot.gov.*

(2) Single copies of any guidance document may be obtained without charge by calling FTA's Administrative Services Help Desk, at (202) 366–4865.

(3) Single copies of any guidance document may also be obtained without charge upon written request to the Associate Administrator for Administration, Federal Transit Administration, 400 7th Street SW., Room 9107, Washington, DC, 20590, or to any FTA regional office listed in § 601.2.

(b) *DOT Docket Management System.* Unless a particular document says otherwise, the following rulemaking documents in proceedings started after February 1, 1997, are available for public review and copying at the Department of Transportation's Docket Management System, Room PL 401, 400 7th Street SW., Washington, DC 20590, or for review and downloading through the Internet at *http://dms.dot.gov:*

(1) Advance notices of proposed rulemaking;

(2) Notices of proposed rulemaking;

(3) Comments received in response to notices;

(4) Petitions for rulemaking and reconsideration;

(5) Denials of petitions for rulemaking and reconsideration; and

(6) Final rules.

(c) Any person may examine docketed material, at any time during regular business hours after the docket is established, and may obtain a copy of such material upon payment of a fee, except material ordered withheld from the public under section 552(b) of Title 5 of the United States Code.

(d) Any person seeking documents not described above may submit a request under the Freedom of Information Act (FOIA) by following the procedures outlined in 49 CFR Part 7.

Subpart C—Rulemaking Procedures

§ 601.20 Applicability.

This part prescribes rulemaking procedures that apply to the issuance, amendment and revocation of rules under an Act.

§ 601.21 Definitions.

Act means statutes granting the Secretary authority to regulate public transportation.

Administrator means the Federal Transit Administrator, the Deputy Administrator or the delegate of either of them.

§ 601.22 General.

(a) Unless the Administrator, for good cause, finds a notice is impractical, unnecessary, or contrary to the public interest, and incorporates such a finding and a brief statement of the reasons for it in the rule, a notice of proposed rulemaking must be issued, and interested persons are invited to participate in the rulemaking proceedings involving rules under an Act.

(b) For rules for which the Administrator determines that notice is unnecessary because no adverse public comment is anticipated, the direct final rulemaking procedure described in § 601.36 of this subpart may be followed.

§ 601.23 Initiation of rulemaking.

The Administrator initiates rulemaking on his/her own motion. However, in so doing, he/she may, in his/her discretion, consider the recommendations of his/her staff or other agencies of the United States or of other interested persons.

§ 601.24 Contents of notices of proposed rulemaking.

(a) Each notice of proposed rulemaking is published in the FEDERAL REGISTER, unless all persons subject to it are named and are personally served with a copy of it.

(b) Each notice, whether published in the FEDERAL REGISTER or personally served, includes:

(1) A statement of the time, place, and nature of the proposed rulemaking proceeding;

(2) A reference to the authority under which it is issued;

(3) A description of the subjects and issues involved or the substance and terms of the proposed rule;

(4) A statement of the time within which written comments must be submitted; and

(5) A statement of how and to what extent interested persons may participate in the proceeding.

§ 601.25 Participation by interested persons.

(a) Any interested person may participate in rulemaking proceedings by submitting comments in writing containing information, views, or arguments.

(b) In his/her discretion, the Administrator may invite any interested person to participate in the rulemaking procedures described in § 601.29.

§ 601.26 Petitions for extension of time to comment.

A petition for extension of the time to submit comments must be received not later than three (3) days before expiration of the time stated in the notice. The filing of the petition does not automatically extend the time for petitioner's comments. Such a petition is granted only if the petitioner shows good cause for the extension, and if the extension is consistent with the public interest. If an extension is granted, it is granted to all persons, and it is published in the FEDERAL REGISTER.

§ 601.27 Contents of written comments.

All written comments must be in English and submitted in five (5) legible copies, unless the number of copies is specified in the notice. Any interested person must submit as part of his/her written comments all material that he/she considers relevant to any statement of fact made by him/her. Incorporation of material by reference is to be avoided. However, if such incorporation is necessary, the incorporated material shall be identified with respect to document and page.

§ 601.28 Consideration of comments received.

All timely comments are considered before final action is taken on a rulemaking proposal. Late filed comments may be considered so far as practicable.

§ 601.29 Additional rulemaking proceedings.

The Administrator may initiate any further rulemaking proceedings that he/she finds necessary or desirable. For example, interested persons may be invited to make oral arguments, to participate in conferences between the Administrator or his/her representative at which minutes of the conference are kept, to appear at informal hearings presided over by officials designated by the Administrator at which a transcript or minutes are kept, or participate in any other proceeding to assure informed administrative action and to protect the public interest.

§ 601.30 Hearings.

(a) Sections 556 and 557 of Title 5, United States Code, do not apply to hearings held under this part. Unless otherwise specified, hearings held under this part are informal, non-adversary, fact-finding procedures at which there are no formal pleadings or adverse parties. Any rule issued in a case in which an informal hearing is held is not necessarily based exclusively on the record of the hearing.

(b) The Administrator designates a representative to conduct any hearing held under this part. The Chief Counsel

of the Federal Transit Administration designates a member of his/her staff to serve as legal officer at the hearing.

§ 601.31 Adoption of final rules.

Final rules are prepared by representatives of the office concerned and the Office of Chief Counsel. The rule is then submitted to the Administrator for his/her consideration. If the Administrator adopts the rule, it is published in the FEDERAL REGISTER, unless all persons subject to it are named and are personally served a copy of it.

§ 601.32 Petitions for rulemaking or exemptions.

(a) Any interested person may petition the Administrator to establish, amend, or repeal a rule, or for a permanent or temporary exemption from FTA rules as allowed by law.

(b) Each petition filed under this section must:

(1) Be submitted in duplicate to the Administrator, Federal Transit Administration, 400 Seventh Street, SW., Washington, DC 20590;

(2) State the name, street and mailing addresses, and telephone number of the petitioner; if the petitioner is not an individual, state the name, street and mailing addresses and telephone number of an individual designated as an agent of the petitioner for all purposes related to the petition;

(3) Set forth the text or substance of the rule or amendment proposed, or of the rule from which the exemption is sought, or specify the rule that the petitioner seeks to have repealed, as the case may be;

(4) Explain the interest of the petitioner in the action requested, including, in the case of a petition for an exemption, the nature and extent of the relief sought and a description of the persons to be covered by the exemption;

(5) Contain any information and arguments available to the petitioner to support the action sought; and

(6) In the case of a petition for exemption, except in cases in which good cause is shown, the petition must be submitted at least 120 days before the requested effective date of the exemption.

§ 601.33 Processing of petitions.

(a) Each petition received under § 601.32 of this part is referred to the head of the office responsible for the subject matter of that petition. Unless the Administrator otherwise specifies, no public hearing, argument or other proceeding is held directly on a petition before its disposition under this section.

(b) *Grants*. If the Administrator determines the petition contains adequate justification, he/she initiates rulemaking action under this Subpart C or grants the exemption, as the case may be.

(c) *Denials*. If the Administrator determines the petition does not justify rulemaking or granting the exemption, he/she denies the petition.

(d) *Notification*. Whenever the Administrator determines that a petition should be granted or denied, the office concerned and the Office of Chief Counsel prepare a notice of that grant or denial for issuance to the petitioner, and the Administrator issues it to the petitioner.

§ 601.34 Petitions for reconsideration.

(a) Any interested person may petition the Administrator for reconsideration of a final rule issued under this part. The petition must be in English and submitted in duplicate to the Administrator, Federal Transit Administration, 400 Seventh Street, SW., Washington, DC, 20590, and received not later than thirty (30) days after publication of the final rule in the FEDERAL REGISTER. Petitions filed after that time will be considered as petitions filed under § 601.32. The petition must contain a brief statement of the complaint and an explanation as to why compliance with the final rule is not practicable, is unreasonable, or is not in the public interest.

(b) If the petitioner requests the consideration of additional facts, he/she must state the reason the facts were not presented to the Administrator within the prescribed comment period of the rulemaking.

(c) The Administrator does not consider repetitious petitions.

(d) Unless the Administrator otherwise provides, the filing of a petition

under this section does not stay the effectiveness of the final rule.

§ 601.35 Proceedings on petitions for reconsideration.

The Administrator may grant or deny, in whole or in part, any petition for reconsideration without further proceedings. In the event he/she determines to reconsider any rule, he/she may issue a final decision on reconsideration without further proceedings, or he/she may provide such opportunity to submit comment or information and data as he/she deems appropriate. Whenever the Administrator determines that a petition should be granted or denied, he/she prepares a notice of the grant or denial of a petition for reconsideration and issues it to the petitioner. The Administrator may consolidate petitions relating to the same rule.

§ 601.36 Procedures for direct final rulemaking.

(a) Rules the Administrator judges to be non-controversial and unlikely to result in adverse public comment may be published as direct final rules. These include non-controversial rules that:

(1) Affect internal procedures of FTA, such as filing requirements and rules governing inspection and copying of documents;

(2) Are non-substantive clarifications or corrections to existing rules;

(3) Update existing forms;

(4) Make minor changes in the substantive rule regarding statistics and reporting requirements;

(5) Make changes to the rule implementing the Privacy Act; and

(6) Adopt technical standards set by outside organizations.

(b) The FEDERAL REGISTER document will state that any adverse comment or notice of intent to submit adverse comment must be received in writing by FTA within the specified time after the date of publication and that, if no written adverse comment or written notice of intent to submit adverse comment is received, the rule will become effective a specified number of days after the date of publication.

(c) If no written adverse comment or written notice of intent to submit adverse comment is received by FTA within the specified time of publication in the FEDERAL REGISTER, FTA will publish a notice in the FEDERAL REGISTER indicating that no adverse comment was received and confirming that the rule will become effective on the date that was indicated in the direct final rule.

(d) If FTA receives any written adverse comment or written notice of intent to submit adverse comment within the specified time of publication in the FEDERAL REGISTER, a notice withdrawing the direct final rule will be published in the final rule section of the FEDERAL REGISTER and, if FTA decides a rulemaking is warranted, a notice of proposed rulemaking will be published in the proposed rule section of the FEDERAL REGISTER.

(e) An ''adverse'' comment for the purpose of this subpart means any comment that FTA determines is critical of the rule, suggests that the rule should not be adopted, or suggests a change that should be made in the rule. A comment suggesting that the policy or requirements of the rule should or should not also be extended to other Departmental programs outside the scope of the rule is not adverse.

Subpart D—Emergency Procedures for Public Transportation Systems

AUTHORITY: 49 U.S.C. 5141 and 5334; 49 CFR 1.51.

SOURCE: 72 FR 912, Jan. 9, 2007, unless otherwise noted.

§ 601.40 Applicability.

This part prescribes procedures that apply to FTA grantees and subgrantees when the President has declared a national or regional emergency, when a State Governor has declared a state of emergency, when the Mayor of the District of Columbia has declared a state of emergency, or in anticipation of such declarations.

§ 601.41 Petitions for relief.

In the case of a national or regional emergency or disaster, or in anticipation of such a disaster, any FTA grantee or subgrantee may petition the Administrator for temporary relief from

the provisions of any policy statement, circular, guidance document or rule.

§ 601.42 Emergency relief docket.

(a) By January 31st of each year, FTA shall establish an Emergency Relief Docket in the publicly accessible DOT Docket Management System (DMS) (*http://dms.dot.gov*).

(b) FTA shall publish a notice in the FEDERAL REGISTER identifying, by docket number, the Emergency Relief Docket for that calendar year. A notice shall also be published in the previous year's Emergency Relief Docket identifying the new docket number.

(c) If the Administrator, or his/her designee, determines that an emergency event has occurred, or in anticipation of such an event, FTA shall place a message on its web page (*http://www.fta.dot.gov*) indicating the Emergency Relief Docket has been opened and including the docket number.

§ 601.43 Opening the docket.

(a) The Emergency Relief Docket shall be opened within two business days of an emergency or disaster declaration in which it appears FTA grantees or subgrantees are or will be impacted.

(b) In cases in which emergencies can be anticipated, such as hurricanes, FTA shall open the docket and place the message on the FTA web page in advance of the event.

(c) In the event a grantee or subgrantee believes the Emergency Relief Docket should be opened and it has not been opened, that grantee or subgrantee may submit a petition in duplicate to the Administrator, via U.S. mail, to: Federal Transit Administration, 400 Seventh Street, SW., Washington, DC 20590; via telephone, at: (202) 366–4043; or via fax, at (202) 366–3472, requesting opening of the Docket for that emergency and including the information in § 601.45. The Administrator in his/her sole discretion shall determine the need for opening the Emergency Relief Docket.

§ 601.44 Posting to the docket.

(a) All petitions for relief must be posted in the docket in order to receive consideration by FTA.

(b) The docket is publicly accessible and can be accessed 24 hours a day, seven days a week, via the Internet at the docket facility's Web site at *http://dms.dot.gov*. Petitions may also be submitted by U.S. mail or by hand delivery to the DOT Docket Management Facility, Room PL–401 (Plaza Level), 400 7th Street, SW, Washington, DC 20590.

(c) In the event a grantee or subgrantee needs to request immediate relief and does not have access to electronic means to request that relief, the grantee or subgrantee may contact any FTA regional office or FTA headquarters and request that FTA staff submit the petition on their behalf.

(d) Any grantee or subgrantee submitting petitions for relief or comments to the docket must include the agency name (Federal Transit Administration) and that calendar year's docket number. Grantees and subgrantees making submissions by mail or hand delivery should submit two copies.

§ 601.45 Required information.

A petition for relief under this section shall:

(a) Identify the grantee or subgrantee and its geographic location;

(b) Specifically address how an FTA requirement in a policy statement, circular, or agency guidance will limit a grantee's or subgrantee's ability to respond to an emergency or disaster;

(c) Identify the policy statement, circular, guidance document and/or rule from which the grantee or subgrantee seeks relief; and

(d) Specify if the petition for relief is one-time or ongoing, and if ongoing identify the time period for which the relief is requested. The time period may not exceed three months; however, additional time may be requested through a second petition for relief.

§ 601.46 Processing of petitions.

(a) A petition for relief will be conditionally granted for a period of three (3) business days from the date it is submitted to the Emergency Relief Docket.

(b) FTA will review the petition after the expiration of the three business

days and review any comments submitted thereto. FTA may contact the grantee or subgrantee that submitted the request for relief, or any party that submits comments to the docket, to obtain more information prior to making a decision.

(c) FTA shall then post a decision to the Emergency Relief Docket. FTA's decision will be based on whether the petition meets the criteria for use of these emergency procedures, the substance of the request, and the comments submitted regarding the petition.

(d) If FTA fails to post a response to the request for relief to the docket within three business days, the grantee or subgrantee may assume its petition is granted until and unless FTA states otherwise.

§ 601.47 Review Procedures.

(a) FTA reserves the right to reopen any docket and reconsider any decision made pursuant to these emergency procedures based upon its own initiative, based upon information or comments received subsequent to the three business day comment period, or at the request of a grantee or subgrantee upon denial of a request for relief. FTA shall notify the grantee or subgrantee if it plans to reconsider a decision.

(b) FTA decision letters, either granting or denying a petition, shall be posted in the appropriate Emergency Relief Docket and shall reference the document number of the petition to which it relates.

PART 604—CHARTER SERVICE

Subpart A—General Provisions

Sec.
604.1 Purpose.
604.2 Applicability.
604.3 Definitions.
604.4 Charter service agreement.

Subpart B—Exceptions

604.5 Purpose.
604.6 Government officials on official government business.
604.7 Qualified human service organizations.
604.8 Leasing FTA funded equipment and drivers.
604.9 When no registered charter provider responds to notice from a recipient.
604.10 Agreement with registered charter providers.
604.11 Petitions to the administrator.
604.12 Reporting requirements for all exceptions.

Subpart C—Procedures for Registration and Notification

604.13 Registration of private charter operators.
604.14 Recipient's notification to registered charter providers.

Subpart D—Registration of Qualified Human Service Organizations and Duties for Recipients With Respect to Charter Registration Web Site

604.15 Registration of qualified human services organizations.
604.16 Duties for recipients with respect to Charter Registration Web site.

Subpart E—Advisor Opinions and Cease and Desist Orders

604.17 Purpose.
604.18 Request for an advisory opinion.
604.19 Processing of advisory opinions.
604.20 Effect of an advisory opinion.
604.21 Special considerations for advisory opinions.
604.22 Request for a cease and desist order.
604.23 Effect of a cease and desist order.
604.24 Decisions by the Chief Counsel regarding cease and desist orders.

Subpart F—Complaints

604.25 Purpose.
604.26 Complaints and decisions regarding removal of private charter operators or qualified human service organizations from registration list.
604.27 Complaints, answers, replies, and other documents.
604.28 Dismissals.
604.29 Incomplete complaints.
604.30 Filing complaints.
604.31 Service.

Subpart G—Investigations

604.32 Investigation of complaint.
604.33 Agency initiation of investigation.

Subpart H—Decisions by FTA and Appointment of a Presiding Official (PO)

604.34 Chief Counsel decisions and appointment of a PO.
604.35 Separation of functions.

Subpart I—Hearings

604.36 Powers of a PO.

604.37 Appearances, parties, and rights of parties.
604.38 Discovery.
604.39 Deposition.
604.40 Public disclosure of evidence.
604.41 Standard of proof.
604.42 Burden of proof.
604.43 Offer of proof.
604.44 Record.
604.45 Waiver of procedures.
604.46 Recommended decision by a PO.
604.47 Remedies.

Subpart J—Appeal to Administrator and Final Agency Orders

604.48 Appeal from Chief Counsel decision.
604.49 Administrator's discretionary review of the Chief Counsel's decision.

Subpart K—Judicial Review

604.50 Judicial review of a final decision and order.
APPENDIX A TO PART 604 —LISTING OF HUMAN SERVICE FEDERAL FINANCIAL ASSISTANCE PROGRAMS
APPENDIX B TO PART 604—REASONS FOR REMOVAL
APPENDIX C TO PART 604—FREQUENTLY ASKED QUESTIONS
APPENDIX D TO PART 604—TABLE OF POTENTIAL REMEDIES

AUTHORITY: 49 U.S.C. 5323(d): 3023(d), Pub. L. 109–59; 49 CFR 1.51.

SOURCE: 73 FR 2345, Jan. 14, 2008, unless otherwise noted.

Subpart A—General provisions.

§ 604.1 Purpose.

(a) The purpose of this part is to implement 49 U.S.C. 5323(d), which protects private charter operators from unauthorized competition from recipients of Federal financial assistance under the Federal Transit Laws.

(b) This subpart specifies which entities shall comply with the charter service regulations; defines terms used in this part; explains procedures for an exemption from this part; and sets out the contents of a charter service agreement.

§ 604.2 Applicability.

(a) The requirements of this part shall apply to recipients of Federal financial assistance under the Federal Transit Laws, except as otherwise provided in paragraphs (b) through (g) of this section.

(b) The requirements of this part shall not apply to a recipient transporting its employees, other transit system employees, transit management officials, transit contractors and bidders, government officials and their contractors and official guests, to or from transit facilities or projects within its geographic service area or proposed geographic service area for the purpose of conducting oversight functions such as inspection, evaluation, or review.

(c) The requirements of this part shall not apply to private charter operators that receive, directly or indirectly, Federal financial assistance under section 3038 of the Transportation Equity Act for the 21st Century, as amended, or to the non-FTA funded activities of private charter operators that receive, directly or indirectly, FTA financial assistance under any of the following programs: 49 U.S.C. 5307, 49 U.S.C. 5309, 49 U.S.C. 5310, 49 U.S.C. 5311, 49 U.S.C. 5316, or 49 U.S.C. 5317.

(d) The requirements of this part shall not apply to a recipient transporting its employees, other transit system employees, transit management officials, transit contractors and bidders, government officials and their contractors and official guests, for emergency preparedness planning and operations.

(e) The requirements of this part shall not apply to a recipient that uses Federal financial assistance from FTA, for program purposes only, under 49 U.S.C. 5310, 49 U.S.C. 5311, 49 U.S.C. 5316, or 49 U.S.C. 5317.

(f) The requirements of this part shall not apply to a recipient, for actions directly responding to an emergency declared by the President, governor, or mayor or in an emergency requiring immediate action prior to a formal declaration. If the emergency lasts more than 45 days, the recipient shall follow the procedures set out in subpart D of 49 CFR 601.

(g) The requirements of this part shall not apply to a recipient in a nonurbanized area transporting its employees, other transit system employees, transit management officials, and transit contractors and bidders to or from transit training outside its geographic service area.

§ 604.3 Definitions.

All terms defined in 49 U.S.C. 5301 *et seq.* are used in their statutory meaning in this part. Other terms used in this part are defined as follows:

(a) *''Federal Transit Laws''* means 49 U.S.C. 5301 *et seq.*, and includes 23 U.S.C. 103(e)(4), 142(a), and 142(c), when used to provide assistance to public transit agencies for purchasing buses and vans.

(b) *''Administrator''* means the Administrator of the Federal Transit Administration or his or her designee.

(c) *''Charter service''* means, but does not include demand response service to individuals:

(1) Transportation provided by a recipient at the request of a third party for the exclusive use of a bus or van for a negotiated price. The following features may be characteristic of charter service:

(i) A third party pays the transit provider a negotiated price for the group;

(ii) Any fares charged to individual members of the group are collected by a third party;

(iii) The service is not part of the transit provider's regularly scheduled service, or is offered for a limited period of time; or

(iv) A third party determines the origin and destination of the trip as well as scheduling; or

(2) Transportation provided by a recipient to the public for events or functions that occur on an irregular basis or for a limited duration and:

(i) A premium fare is charged that is greater than the usual or customary fixed route fare; or

(ii) The service is paid for in whole or in part by a third party.

(d) *''Charter service hours''* means total hours operated by buses or vans while in charter service including:

(1) Hours operated while carrying passengers for hire, plus

(2) Associated deadhead hours.

(e) *''Chief Counsel''* means the Chief Counsel of FTA and his or her designated employees.

(f) *''Days''* means calendar days. The last day of a time period is included in the computation of time unless the last day is a Saturday, Sunday, or legal holiday, in which case, the time period runs until the end of the next day that is not a Saturday, Sunday, or legal holiday.

(g) *''Demand response''* means any non-fixed route system of transporting individuals that requires advanced scheduling by the customer, including services provided by public entities, nonprofits, and private providers.

(h) *''Exclusive''* means service that a reasonable person would conclude is intended to exclude members of the public.

(i) *''FTA''* means the Federal Transit Administration.

(j) *''Geographic service area''* means the entire area in which a recipient is authorized to provide public transportation service under appropriate local, state, and Federal law.

(k) *''Government official''* means an individual elected or appointed at the local, state, or Federal level.

(l) *''Interested party''* means an individual, partnership, corporation, association, or other organization that has a financial interest that is affected by the actions of a recipient providing charter service under the Federal Transit Laws. This term includes states, counties, cities, and their subdivisions, and tribal nations.

(m) *''Pattern of violations''* means more than one finding of unauthorized charter service under this part by FTA beginning with the most recent finding of unauthorized charter service and looking back over a period not to exceed 72 months.

(n) *''Presiding Official''* means an official or agency representative who conducts a hearing at the request of the Chief Counsel and who has had no previous contact with the parties concerning the issue in the proceeding.

(o) *''Program purposes''* means transportation that serves the needs of either human service agencies or targeted populations (elderly, individuals with disabilities, and or low income individuals); this does not include exclusive service for other groups formed for purposes unrelated to the special needs of the targeted populations identified herein.

(p) *''Public transportation''* has the meaning set forth in 49 U.S.C. 5302(a)(10).

(q) *''Qualified human service organization''* means an organization that

serves persons who qualify for human service or transportation-related programs or services due to disability, income, or advanced age. This term is used consistent with the President's Executive Order on Human Service Transportation Coordination (February 24, 2004).

(r) ''*Recipient*'' means an agency or entity that receives Federal financial assistance, either directly or indirectly, including subrecipients, under the Federal Transit Laws. This term does not include third-party contractors who use non-FTA funded vehicles.

(s) ''*Registered charter provider*'' means a private charter operator that wants to receive notice of charter service requests directed to recipients and has registered on FTA's charter registration Web site.

(t) ''*Registration list*'' means the current list of registered charter providers and qualified human service organizations maintained on FTA's charter registration Web site.

(u) ''*Special transportation*'' means demand response or paratransit service that is regular and continuous and is a type of ''public transportation.''

(v) ''*Violation*'' means a finding by FTA of a failure to comply with one of the requirements of this Part.

§ 604.4 Charter service agreement.

(a) A recipient seeking Federal assistance under the Federal Transit Laws to acquire or operate any public transportation equipment or facilities shall enter into a ''Charter Service Agreement'' as set out in paragraph (b) of this section.

(b) A recipient shall enter into a Charter Service Agreement if it receives Federal funds for equipment or facilities under the Federal Transit Laws. The terms of the Charter Service Agreement are as follows: ''The recipient agrees that it, and each of its subrecipients, and third party contractors at any level who use FTA-funded vehicles, may provide charter service using equipment or facilities acquired with Federal assistance authorized under the Federal Transit Laws only in compliance with the regulations set out in 49 CFR 604, the terms and conditions of which are incorporated herein by reference.''

(c) The Charter Service Agreement is contained in the Certifications and Assurances published annually by FTA for applicants for Federal financial assistance. Once a recipient receives Federal funds, the Certifications and Assurances become part of its Grant Agreement or Cooperative Agreement for Federal financial assistance.

Subpart B—Exceptions

§ 604.5 Purpose.

The purpose of this subpart is to identify the limited exceptions under which recipients may provide community-based charter services.

§ 604.6 Government officials on official government business.

(a) A recipient may provide charter service to government officials (Federal, State, and local) for official government business, which can include non-transit related purposes, if the recipient:

(1) Provides the service in its geographic service area;

(2) Does not generate revenue from the charter service, except as required by law; and

(3) After providing such service, records the following:

(i) The government organization's name, address, phone number, and e-mail address;

(ii) The date and time of service;

(iii) The number of passengers (specifically noting the number of government officials on the trip);

(iv) The origin, destination, and trip length (miles and hours);

(v) The fee collected, if any; and

(vi) The vehicle number for the vehicle used to provide the service.

(b) A recipient that provides charter service under this section shall be limited annually to 80 charter service hours for providing trips to government officials for official government business.

(c) A recipient may petition the Administrator for additional charter service hours only if the petition contains the following information:

(1) Date and description of the official government event and the number of charter service hours requested;

(2) Explanation of why registered charter providers in the geographic service area cannot perform the service (e.g., equipment, time constraints, or other extenuating circumstances); and

(3) Evidence that the recipient has sent the request for additional hours to registered charter providers in its geographic service area.

(d) FTA shall post the request for additional charter service hours under this exception in the Government Officials Exception docket, docket number FTA–2007–0020 at *http://www.regulations.gov*. Interested parties may review the contents of this docket and bring questions or concerns to the attention of the Ombudsman for Charter Services. The written decision of the Administrator regarding the request for additional charter service hours shall be posted in the Government Officials Exception docket and sent to the recipient.

§ 604.7 Qualified human service organizations.

(a) A recipient may provide charter service to a qualified human service organization (QHSO) for the purpose of serving persons:

(1) With mobility limitations related to advanced age;

(2) With disabilities; or

(3) With low income.

(b) If an organization serving persons described in paragraph (a) of this section receives funding, directly or indirectly, from the programs listed in Appendix A of this part, the QHSO shall not be required to register on the FTA charter registration Web site.

(c) If a QHSO serving persons described in paragraph (a) of this section does not receive funding from any of the programs listed in Appendix A of this part, the QHSO shall register on the FTA charter registration Web site in accordance with § 604.15.

(d) A recipient providing charter service under this exception, whether or not the QHSO receives funding from Appendix A programs, and after providing such charter service, shall record:

(1) The QHSO's name, address, phone number, and e-mail address;

(2) The date and time of service;

(3) The number of passengers;

(4) The origin, destination, and trip length (miles and hours);

(5) The fee collected, if any; and

(6) The vehicle number for the vehicle used to provide the service.

§ 604.8 Leasing FTA funded equipment and drivers.

(a) A recipient may lease its FTA-funded equipment and drivers to registered charter providers for charter service only if the following conditions exist:

(1) The private charter operator is registered on the FTA charter registration Web site;

(2) The registered charter provider owns and operates buses or vans in a charter service business;

(3) The registered charter provider received a request for charter service that exceeds its available capacity either of the number of vehicles operated by the registered charter provider or the number of accessible vehicles operated by the registered charter provider; and

(4) The registered charter provider has exhausted all of the available vehicles of all registered charter providers in the recipient's geographic service area.

(b) A recipient leasing vehicles and drivers to a registered charter provider under this provision shall record:

(1) The registered charter provider's name, address, telephone number, and e-mail address;

(2) The number of vehicles leased, types of vehicles leased, and vehicle identification numbers; and

(3) The documentation presented by the registered charter provider in support of paragraphs (a)(1) through (4) of this section.

(c) In accordance with § 604.26, if a registered charter provider seeking to lease vehicles has filed a complaint requesting that another registered charter provider be removed from the FTA charter registration Web site, then the registered charter provider seeking to lease vehicles is not required to exhaust the vehicles from that registered charter provider while the complaint is pending before leasing vehicles from a recipient.

§ 604.9 When no registered charter provider responds to notice from a recipient.

(a) A recipient may provide charter service, on its own initiative or at the request of a third party, if no registered charter provider responds to the notice issued in § 604.14:

(1) Within 72 hours for charter service requested to be provided in less than 30 days; or

(2) Within 14 calendar days for charter service requested to be provided in 30 days or more.

(b) A recipient shall not provide charter service under this section if a registered charter provider indicates an interest in providing the charter service set out in the notice issued pursuant to § 604.14 and the registered charter provider has informed the recipient of its interest in providing the service.

(c) After providing the service, a recipient shall record:

(1) The group's name, address, phone number, and e-mail address;

(2) The date and time of service;

(3) The number of passengers;

(4) The origin, destination, and trip length (miles and hours);

(5) The fee collected, if any; and

(6) The vehicle number for the vehicle used to provide the service.

§ 604.10 Agreement with registered charter providers.

(a) A recipient may provide charter service directly to a customer consistent with an agreement entered into with all registered charter providers in the recipient's geographic service area.

(b) If a new charter provider registers in the geographic service area subsequent to the initial agreement, the recipient may continue to provide charter service under the previous agreement with the other charter providers up to 90 days without an agreement with the newly registered charter provider.

(c) Any of the parties to an agreement may cancel the agreement at any time after providing the recipient a 90-day notice.

§ 604.11 Petitions to the Administrator.

(a) A recipient may petition the Administrator for an exception to the charter service regulations to provide charter service directly to a customer for:

(1) Events of regional or national significance;

(2) Hardship (only for non-urbanized areas under 50,000 in population or small urbanized areas under 200,000 in population); or

(3) Unique and time sensitive events (e.g., funerals of local, regional, or national significance) that are in the public's interest.

(b) The petition to the Administrator shall include the following information:

(1) The date and description of the event;

(2) The type of service requested and the type of equipment;

(3) The anticipated number of charter service hours needed for the event;

(4) The anticipated number of vehicles and duration of the event; and

(i) For an event of regional or national significance, the petition shall include a description of how registered charter providers were consulted, how registered charter providers will be utilized in providing the charter service, a certification that the recipient has exhausted all of the registered charter providers in its geographic service area, and submit the petition at least 90 days before the first day of the event described in paragraph (b)(1) of this section;

(ii) For a hardship request, a petition is only available if the registered charter provider has deadhead time that exceeds total trip time from initial pick-up to final drop-off, including wait time. The petition shall describe how the registered charter provider's minimum duration would create a hardship on the group requesting the charter service; or

(iii) For unique and time sensitive events, the petition shall describe why the event is unique or time sensitive and how providing the charter service would be in the public's interest.

(c) Upon receipt of a petition that meets the requirements set forth in paragraph (b) of this section, the Administrator shall review the materials and issue a written decision denying or granting the request in whole or in part. In making this decision, the Administrator may seek such additional

information as the Administrator deems necessary. The Administrator's decision shall be filed in the Petitions to the Administrator docket, number FTA–2007–0022 at *http://www.regulations.gov* and sent to the recipient.

(d) Any exception granted by the Administrator under this section shall be effective only for the event identified in paragraph (b)(1) of this section.

(e) A recipient shall send its petition to the Administrator by facsimile to (202) 366–3809 or by e-mail to *ombudsman.charterservice@dot.gov*.

(f) A recipient shall retain a copy of the Administrator's approval for a period of at least three years and shall include it in the recipient's quarterly report posted on the charter registration Web site.

§ 604.12 Reporting requirements for all exceptions.

(a) A recipient that provides charter service in accordance with one or more of the exceptions contained in this subpart shall maintain the required notice and records in an electronic format for a period of at least three years from the date of the service or lease. A recipient may maintain the required records in other formats in addition to the electronic format.

(b) In addition to the requirements identified in paragraph (a) of this section, the records required under this subpart shall include a clear statement identifying which exception the recipient relied upon when it provided the charter service.

(c) Beginning on July 30, 2008, a recipient providing charter service under these exceptions shall post the records required under this subpart on the FTA charter registration Web site 30 days after the end of each calendar quarter (*i.e.*, January 30th, April 30th, July 30th, and October 30th). A single document or charter log may include all charter service trips provided during the quarter.

(d) A recipient may exclude specific origin and destination information for safety and security reasons. If a recipient excludes such information, the record of the service shall describe the reason why such information was excluded and provide generalized information instead of providing specific origin and destination information.

Subpart C—Procedures for Registration and Notification

§ 604.13 Registration of private charter operators.

(a) Private charter operators shall provide the following information at *http://www.fta.dot.gov/laws/leg_reg_179.html* to be considered a registered charter provider:

(1) Company name, address, phone number, e-mail address, and facsimile number;

(2) Federal and, if available, state motor carrier identifying number;

(3) The geographic service areas of public transit agencies, as identified by the transit agency's zip code, in which the private charter operator intends to provide charter service;

(4) The number of buses or vans the private charter operator owns;

(5) A certification that the private charter operator has valid insurance; and

(6) Whether willing to provide free or reduced rate charter services to registered qualified human service organizations.

(b) A private charter operator that provides valid information in this subpart is a ''registered charter provider'' for purposes of this part and shall have standing to file a complaint consistent with subpart F.

(c) A recipient, a registered charter provider, or their duly authorized representative, may challenge a registered charter provider's registration and request removal of the private charter operator from FTA's charter registration Web site by filing a complaint consistent with subpart F.

(d) FTA may refuse to post a private charter operator's information if the private charter operator fails to provide all of the required information as indicated on the FTA charter registration Web site.

(e) A registered charter provider shall provide current and accurate information on FTA's charter registration Web site, and shall update that information no less frequently than every two years.

§ 604.14 Recipient's notification to registered charter providers.

(a) Upon receiving a request for charter service, a recipient may:

(1) Decline to provide the service, with or without referring the requestor to FTA's charter registration Web site (*http://www.fta.dot.gov/laws/leg_reg_179.html*);

(2) Provide the service under an exception provided in subpart B of this part; or

(3) Provide notice to registered charter providers as provided in this section and provide the service pursuant to § 604.9.

(b) If a recipient is interested in providing charter service under the exception contained in § 604.9, then upon receipt of a request for charter service, the recipient shall provide e-mail notice to registered charter providers in the recipient's geographic service area in the following manner:

(1) E-mail notice of the request shall be sent by the close of business on the day the recipient receives the request unless the recipient received the request after 2 p.m., in which case the recipient shall send the notice by the close of business the next business day;

(2) E-mail notice sent to the list of registered charter providers shall include:

(i) Customer name, address, phone number, and e-mail address (if available);

(ii) Requested date of service;

(iii) Approximate number of passengers;

(iv) Whether the type of equipment requested is (are) bus(es) or van(s); and

(v) Trip itinerary and approximate duration; and

(3) If the recipient intends to provide service that meets the definition of charter service under § 604.3(c)(2), the e-mail notice must include the fare the recipient intends to charge for the service.

(c) A recipient shall retain an electronic copy of the e-mail notice and the list of registered charter providers that were sent e-mail notice of the requested charter service for a period of at least three years from the date the e-mail notice was sent.

(d) If a recipient receives an ''undeliverable'' notice in response to its e-mail notice, the recipient shall send the notice via facsimile. The recipient shall maintain the record of the undeliverable e-mail notice and the facsimile sent confirmation for a period of three years.

Subpart D—Registration of Qualified Human Service Organizations and Duties for Recipients With Respect to Charter Registration Web site

§ 604.15 Registration of qualified human service organizations.

(a) Qualified human service organizations (QHSO) that seek free or reduced rate services from recipients, and do not receive funds from Federal programs listed in Appendix A, but serve individuals described in § 604.7 (*i.e.*, individuals with low income, advanced age, or with disabilities), shall register on FTA's charter registration Web site by submitting the following information:

(1) Name of organization, address, phone number, e-mail address, and facsimile number;

(2) The geographic service area of the recipient in which the qualified human service organization resides;

(3) Basic financial information regarding the qualified human service organization and whether the qualified human service organization is exempt from taxation under sections 501(c) (1), (3), (4), or (19) of the Internal Revenue Code, and whether it is a unit of Federal, State or local government;

(4) Whether the qualified human service organization receives funds directly or indirectly from a State or local program, and if so, which program(s); and

(5) A narrative statement describing the types of charter service trips the qualified human service organization may request from a recipient and how that service is consistent with the mission of the qualified human service organization.

(b) A qualified human service organization is eligible to receive charter services from a recipient if it:

(1) Registers on the FTA Web site in accordance with paragraph (a) of this section at least 60 days before the date of the requested charter service; and

(2) Verifies FTA's receipt of its registration by viewing its information on the FTA charter registration Web site (*http://www.fta.dot.gov/laws/leg_reg_179.html*).

(c) A registered charter provider may challenge a QHSO's status to receive charter services from a recipient by requesting removal of the QHSO from FTA's charter registration Web site by filing a complaint consistent with subpart F.

(d) A QHSO shall provide current and accurate information on FTA's charter registration Web site, and shall update that information no less frequently than every two years.

§ 604.16 Duties for recipients with respect to charter registration Web site.

Each recipient shall ensure that its affected employees and contractors have the necessary competency to effectively use the FTA charter registration Web site.

Subpart E—Advisory Opinions and Cease and Desist Orders

§ 604.17 Purpose.

The purpose of this subpart is to set out the requirements for requesting an advisory opinion from the Chief Counsel's Office. An advisory opinion may also request that the Chief Counsel issue a cease and desist order, which would be an order to refrain from doing an act which, if done, would be a violation of this part.

§ 604.18 Request for an advisory opinion.

(a) An interested party may request an advisory opinion from the Chief Counsel on a matter regarding specific factual events only.

(b) A request for an advisory opinion shall be submitted in the following form:

[Date]
Chief Counsel, Federal Transit Administration, 1200 New Jersey Ave. SE., Room E55–302, Washington, DC 20590
Re: Request for Advisory Opinion
The undersigned submits this request for an advisory opinion from the FTA Chief Counsel with respect to [the general nature of the matter involved].
A. A full statement of all facts and legal points relevant to the request
B. An affirmation that the undersigned swears, to the best of his/her knowledge and belief, this request includes all data, information, and views relevant to the matter, whether favorable or unfavorable to the position of the undersigned, which is the subject of the request.
C. The following certification: ''I hereby certify that I have this day served the foregoing [name of document] on the following interested party(ies) at the following addresses and e-mail or facsimile numbers (if also served by e-mail or facsimile) by [specify method of service]:
[list persons, addresses, and e-mail or facsimile numbers]''
Dated this _____ day of ____ , 20____.
[Signature]
[Printed name]
[Title of person making request]
[Mailing address]
[Telephone number]
[e-mail address]

(c) The Chief Counsel may request additional information, as necessary, from the party submitting the request for an advisory opinion.

(d) A request for an advisory opinion may be denied if:

(1) The request contains incomplete information on which to base an informed advisory opinion;

(2) The Chief Counsel concludes that an advisory opinion cannot reasonably be given on the matter involved;

(3) The matter is adequately covered by a prior advisory opinion or a regulation;

(4) The Chief Counsel otherwise concludes that an advisory opinion would not be in the public interest.

§ 604.19 Processing of advisory opinions.

(a) A request for an advisory opinion shall be sent to the Chief Counsel at *ombudsman.charterservice@dot.gov*, and filed electronically in the Charter Service Advisory Opinion/Cease and Desist Order docket number FTA–2007–0023 at *http://www.regulations.gov* or sent to the dockets office located at 1200 New Jersey Ave., SE., West Building Ground Floor, Room W12–140, Washington, DC 20590, for submission to that docket.

(b) The Chief Counsel shall make every effort to respond to a request for an advisory opinion within ten days of receipt of a request that complies with

§ 604.18(b). The Chief Counsel shall send his or her decision to the interested party, the docket, and the recipient, if appropriate.

§ 604.20 Effect of an advisory opinion.

(a) An advisory opinion represents the formal position of FTA on a matter, and except as provided in § 604.25 of this subpart, obligates the agency to follow it until it is amended or revoked.

(b) An advisory opinion may be used in administrative or court proceedings to illustrate acceptable and unacceptable procedures or standards, but not as a legal requirement and is limited to the factual circumstances described in the request for an advisory opinion. The Chief Counsel's advisory opinion shall not be binding upon a Presiding Official conducting a proceeding under subpart I of this part.

(c) A statement made or advice provided by an FTA employee constitutes an advisory opinion only if it is issued in writing under this section. A statement or advice given by an FTA employee orally, or given in writing, but not under this section, is an informal communication that represents the best judgment of that employee at the time but does not constitute an advisory opinion, does not necessarily represent the formal position of FTA, and does not bind or otherwise obligate or commit the agency to the views expressed.

§ 604.21 Special considerations for advisory opinions.

Based on new facts involving significant financial considerations, the Chief Counsel may take appropriate enforcement action contrary to an advisory opinion before amending or revoking the opinion. This action shall be taken only with the approval of the Administrator.

§ 604.22 Request for a cease and desist order.

(a) An interested party may also request a cease and desist order as part of its request for an advisory opinion. A request for a cease and desist order shall contain the following information in addition to the information required for an advisory opinion:

(1) A description of the need for the cease and desist order, a detailed description of the lost business opportunity the interested party is likely to suffer if the recipient performs the charter service in question, and how the public interest will be served by avoiding or ameliorating the lost business opportunity. A registered charter provider must distinguish its loss from that of other registered charter providers in the geographic service area.

(2) A detailed description of the efforts made to notify the recipient of the potential violation of the charter service regulations. Include names, titles, phone numbers or e-mail addresses of persons contacted, date and times contact was made, and the response received, if any.

(b) A request for a cease and desist order may be denied if:

(1) The request contains incomplete information on which to base an informed a cease and desist order;

(2) The Chief Counsel concludes that a cease and desist order cannot reasonably be given on the matter involved;

(3) The matter is adequately covered by a prior a cease and desist order; or

(4) The Chief Counsel otherwise concludes that a cease and desist order would not be in the public interest.

(c) A recipient who is the subject of a request for a cease and desist order shall have three business days to respond to the request. The response shall include a point-by-point rebuttal to the information included in the request for a cease and desist order.

(d) The time period for a response by the recipient begins once a registered charter provider files a request in the Advisory Opinion/Cease and Desist Order docket (FTA–2007–0023 at *http://www.regulations.gov*) or with the FTA Chief Counsel's Office, whichever date is sooner.

§ 604.23 Effect of a cease and desist order.

(a) Issuance of a cease and desist order against a recipient shall be considered as an aggravating factor in determining the remedy to impose against the recipient in future findings of noncompliance with this part, if the recipient provides the service described

in the cease and desist order issued by the Chief Counsel.

(b) In determining whether to grant the request for a cease and desist order, the Chief Counsel shall consider the specific facts shown in the signed, sworn request for a cease and desist order, applicable statutes and regulations, and any other information that is relevant to the request.

§ 604.24 Decisions by the Chief Counsel regarding cease and desist orders.

(a) The Chief Counsel may grant a request for a cease and desist order if the interested party demonstrates, by a preponderance of the evidence, that the planned provision of charter service by a recipient would violate this part.

(b) In determining whether to grant the request for a cease and desist order, the Chief Counsel shall consider the specific facts shown in the signed, sworn request for a cease and desist order, applicable statutes, regulations, agreements, and any other information that is relevant to the request.

Subpart F—Complaints

§ 604.25 Purpose.

This subpart describes the requirements for filing a complaint challenging the registration of a private charter operator or qualified human service organization on the FTA charter registration Web site and filing a complaint regarding the provision of charter service by a recipient. Note: To save time and expense for all concerned, FTA expects all parties to attempt to resolve matters informally before beginning the official complaint process.

§ 604.26 Complaints and decisions regarding removal of private charter operators or qualified human service organizations from registration list.

(a) A recipient, a registered charter provider, or its duly authorized representative, may challenge the listing of a registered charter provider or qualified human service organization on FTA's charter registration Web site by filing a complaint that meets the following:

(1) States the name and address of each entity who is the subject of the complaint;

(2) Provides a concise but complete statement of the facts relied upon to substantiate the reason why the private charter operator or qualified human service organization should not be listed on the FTA charter registration Web site;

(3) Files electronically by submitting it to the Charter Service Removal Complaint docket number FTA–2007–0024 at *http://www.regulations.gov*;

(4) Serves by e-mail or facsimile if no e-mail address is available, or by overnight mail service with receipt confirmation, and attaches documents offered in support of the complaint upon all entities named in the complaint;

(5) Files within 90 days of discovering facts that merit removal of the registered charter provider or qualified human service organization from the FTA Charter Registration Web site; and

(6) Contains the following certification:

I hereby certify that I have this day served the foregoing [name of document] on the following persons at the following addresses and e-mail or facsimile numbers (if also served by e-mail or facsimile) by [specify method of service]:

[list persons, addresses, and e-mail or facsimile numbers]

Dated this _____ day of _____, 20____.

[signature], for [party].

(b) The registered charter provider or qualified human service organization shall have 15 days to answer the complaint and shall file such answer, and all supporting documentation, in the Charter Service Removal Complaint docket number FTA–2007–0024 at *http://www.regulations.gov* and e-mail such answer to *ombudsman.charterservice@dot.gov*.

(c) A recipient, qualified human service organization, or a registered charter provider, or its duly authorized representative, shall not file a reply to the answer.

(d) FTA shall determine whether to remove the registered charter provider or qualified human service organization from the FTA charter registration Web site based on a preponderance of

the evidence of one or more of the following:

(1) Bad faith;

(2) Fraud;

(3) Lapse of insurance;

(4) Lapse of other documentation; or

(5) The filing of more than one complaint, which on its face, does not state a claim that warrants an investigation or further action by FTA.

(e) FTA's determination whether or not to remove a registered charter provider or qualified human service organization from the registration list shall be sent to the parties within 30 days of the date of the response required in paragraph (b) of this section and shall state:

(1) Reasons for allowing the continued listing or removal of the registered charter provider or qualified human service organization from the registration list;

(2) If removal is ordered, the length of time (not to exceed three years) the private charter operator or qualified human service organization shall be barred from the registration list; and

(3) The date by which the private charter operator or qualified human service organization may re-apply for registration on the FTA charter registration Web site.

§ 604.27 Complaints, answers, replies, and other documents.

(a) A registered charter provider, or its duly authorized representative (''complainant''), affected by an alleged noncompliance of this part may file a complaint with the Office of the Chief Counsel.

(b) Complaints filed under this subpart shall:

(1) Be titled ''Notice of Charter Service Complaint'';

(2) State the name and address of each recipient that is the subject of the complaint and, with respect to each recipient, the specific provisions of this part that the complainant believes were violated;

(2) Be served in accordance with § 604.31, along with all documents then available in the exercise of reasonable diligence, offered in support of the complaint, upon all recipients named in the complaint as being responsible for the alleged action(s) or omission(s) upon which the complaint is based;

(3) Provide a concise but complete statement of the facts relied upon to substantiate each allegation (complainant must show by a preponderance of the evidence that the recipient provided charter service and that such service did not fall within one of the exemptions or exceptions set out in this part);

(4) Describe how the complainant was directly and substantially affected by the things done or omitted by the recipients;

(5) Identify each registered charter provider associated with the complaint; and

(6) Be filed within 90 days after the alleged event giving rise to the complaint occurred.

(c) Unless the complaint is dismissed pursuant to § 604.28 or § 604.29, FTA shall notify the complainant, respondent, and state recipient, if applicable, within 30 days after the date FTA receives the complaint that the complaint has been docketed. Respondent shall have 30 days from the date of service of the FTA notification to file an answer.

(d) The complainant may file a reply within 20 days of the date of service of the respondent's answer.

(e) The respondent may file a rebuttal within 10 days of the date of service of the reply.

(f) The answer, reply, and rebuttal shall, like the complaint, be accompanied by the supporting documentation upon which the submitter relies.

(g) The answer shall deny or admit the allegations made in the complaint or state that the entity filing the document is without sufficient knowledge or information to admit or deny an allegation, and shall assert any affirmative defense.

(h) The answer, reply, and rebuttal shall each contain a concise but complete statement of the facts relied upon to substantiate the answers, admissions, denials, or averments made.

(i) The respondent's answer may include a motion to dismiss the complaint, or any portion thereof, with a supporting memorandum of points and authorities.

(j) The complainant may withdraw a complaint at any time after filing by serving a ''Notification of Withdrawal'' on the Chief Counsel and the respondent.

§ 604.28 Dismissals.

(a) Within 20 days after the receipt of a complaint described in § 604.27, the Office of the Chief Counsel shall provide reasons for dismissing a complaint, or any claim in the complaint, with prejudice, under this section if:

(1) It appears on its face to be outside the jurisdiction of FTA under the Federal Transit Laws;

(2) On its face it does not state a claim that warrants an investigation or further action by FTA; or

(3) The complainant lacks standing to file a complaint under subparts B, C, or D of this part.

(b) [Reserved]

§ 604.29 Incomplete complaints.

If a complaint is not dismissed under § 604.28, but is deficient as to one or more of the requirements set forth in § 604.27, the Office of the Chief Counsel may dismiss the complaint within 20 days after receiving it. Dismissal shall be without prejudice and the complainant may re-file after amendment to correct the deficiency. The Chief Counsel's dismissal shall include the reasons for the dismissal without prejudice.

§ 604.30 Filing complaints.

(a) *Filing address.* Unless provided otherwise, the complainant shall file the complaint with the Office of the Chief Counsel, 1200 New Jersey Ave., SE., Room E55–302, Washington, DC 20590 and file it electronically in the Charter Service Complaint docket number FTA–2007–0025 at *http://www.regulations.gov* or mail it to the docket by sending the complaint to 1200 New Jersey Ave., SE., West Building Ground Floor, Room W12–140, Washington, DC 20590.

(b) *Date and method of filing.* Filing of any document shall be by personal delivery, U.S. mail, or overnight delivery with receipt confirmation. Unless the date is shown to be inaccurate, documents to be filed with FTA shall be deemed filed, on the earliest of:

(1) The date of personal delivery;

(2) The mailing date shown on the certificate of service;

(3) The date shown on the postmark if there is no certificate of service; or

(4) The mailing date shown by other evidence if there is no certificate of service and no postmark.

(c) *E-mail or fax.* A document sent by facsimile or e-mail shall not constitute service as described in § 604.31.

(d) *Number of copies.* Unless otherwise specified, an executed original shall be filed with FTA.

(e) *Form.* Documents filed with FTA shall be typewritten or legibly printed. In the case of docketed proceedings, the document shall include a title and the docket number, as established by the Chief Counsel or Presiding Official, of the proceeding on the front page.

(f) *Signing of documents and other papers.* The original of every document filed shall be signed by the person filing it or the person's duly authorized representative. Subject to the enforcement provisions contained in this subpart, the signature shall serve as a certification that the signer has read the document and, based on reasonable inquiry, to the best of the signer's knowledge, information, and belief, the document is:

(1) Consistent with this part;

(2) Warranted by existing law or that a good faith argument exists for extension, modification, or reversal of existing law; and

(3) Not interposed for any improper purpose, such as to harass or to cause unnecessary delay or needless increase in the cost of the administrative process.

§ 604.31 Service.

(a) *Designation of person to receive service.* The initial document filed by the complainant shall state on the first page of the document for all parties to be served:

(1) The title of the document;

(2) The name, post office address, telephone number; and

(3) The facsimile number, if any, and e-mail address(es), if any.

If any of the above items change during the proceeding, the person shall promptly file notice of the change with

FTA and the Presiding Official, if appropriate, and shall serve the notice on all other parties to the proceeding.

(b) *Docket numbers.* Each submission identified as a complaint under this part by the submitting party shall be filed in the Charter Service Complaint docket FTA–2007–0025.

(c) *Who must be served.* Copies of all documents filed with FTA shall be served by the entity filing them on all parties to the proceeding. A certificate of service shall accompany all documents when they are tendered for filing and shall certify concurrent service on FTA and all parties. Certificates of service shall be in substantially the following form:

I hereby certify that I have this day served the foregoing [name of document] on the following persons at the following addresses and e-mail or facsimile numbers (if also served by e-mail or facsimile) by [specify method of service]:

[list persons, addresses, and e-mail or facsimile numbers]

Dated this _____ day of _____, 20____.

[signature], for [party]

(d) *Method of service.* Except as otherwise provided in § 604.26, or agreed by the parties and the Presiding Official, as appropriate, the method of service is personal delivery or U.S. mail.

(e) *Presumption of service.* There shall be a presumption of lawful service:

(1) When acknowledgment of receipt is by a person who customarily or in the ordinary course of business receives mail at the address of the party or of the person designated under this section; or

(2) When a properly addressed envelope, sent to the last known address has been returned as undeliverable, unclaimed, or refused.

Subpart G—Investigations

§ 604.32 Investigation of complaint.

(a) If, based on the pleadings, there appears to be a reasonable basis for investigation, FTA shall investigate the subject matter of the complaint.

(b) The investigation may include a review of written submissions or pleadings of the parties, as supplemented by any informal investigation FTA considers necessary and by additional information furnished by the parties at FTA request. Each party shall file documents that it considers sufficient to present all relevant facts and argument necessary for FTA to determine whether the recipient is in compliance.

(c) The Chief Counsel shall send a notice to complainant(s) and respondent(s) once an investigation is complete, but not later than 90 days after receipt of the last pleading specified in § 604.27 was due to FTA.

§ 604.33 Agency initiation of investigation.

(a) Notwithstanding any other provision under these regulations, FTA may initiate its own investigation of any matter within the applicability of this Part without having received a complaint. The investigation may include, without limitation, any of the actions described in § 604.32.

(b) Following the initiation of an investigation under this section, FTA sends a notice to the entities subject to investigation. The notice will set forth the areas of FTA's concern and the reasons; request a response to the notice within 30 days of the date of service; and inform the respondent that FTA will, in its discretion, invite good faith efforts to resolve the matter.

(c) If the matters addressed in the FTA notice are not resolved informally, the Chief Counsel may refer the matter to a Presiding Official.

Subpart H—Decisions by FTA and Appointment of a Presiding Official (PO)

§ 604.34 Chief Counsel decisions and appointment of a PO.

(a) After receiving a complaint consistent with § 604.27, and conducting an investigation, the Chief Counsel may:

(1) Issue a decision based on the pleadings filed to date;

(2) Appoint a PO to review the matter; or

(3) Dismiss the complaint pursuant to § 604.28.

(b) If the Chief Counsel appoints a PO to review the matter, the Chief Counsel shall send out a hearing order that sets forth the following:

(1) The allegations in the complaint, or notice of investigation, and the

chronology and results of the investigation preliminary to the hearing;

(2) The relevant statutory, judicial, regulatory, and other authorities;

(3) The issues to be decided;

(4) Such rules of procedure as may be necessary to supplement the provisions of this Part;

(5) The name and address of the PO, and the assignment of authority to the PO to conduct the hearing in accordance with the procedures set forth in this Part; and

(6) The date by which the PO is directed to issue a recommended decision.

§ 604.35 Separation of functions.

(a) Proceedings under this part shall be handled by an FTA attorney, except that the Chief Counsel may appoint a PO, who may not be an FTA attorney.

(b) After issuance of an initial decision by the Chief Counsel, the FTA employee or contractor engaged in the performance of investigative or prosecutorial functions in a proceeding under this part shall not, in that case or a factually related case, participate or give advice in a final decision by the Administrator or his or her designee on written appeal, and shall not, except as counsel or as witness in the public proceedings, engage in any substantive communication regarding that case or a related case with the Administrator on written appeal.

Subpart I—Hearings.

§ 604.36 Powers of a PO.

A PO may:

(a) Give notice of, and hold, pre-hearing conferences and hearings;

(b) Administer oaths and affirmations;

(c) Issue notices of deposition requested by the parties;

(d) Limit the frequency and extent of discovery;

(e) Rule on offers of proof;

(f) Receive relevant and material evidence;

(g) Regulate the course of the hearing in accordance with the rules of this part to avoid unnecessary and duplicative proceedings in the interest of prompt and fair resolution of the matters at issue;

(h) Hold conferences to settle or to simplify the issues by consent of the parties;

(i) Dispose of procedural motions and requests;

(j) Examine witnesses; and

(k) Make findings of fact and conclusions of law and issue a recommended decision.

§ 604.37 Appearances, parties, and rights of parties.

(a) Any party to the hearing may appear and be heard in person and any party to the hearing may be accompanied, represented, or advised by an attorney licensed by a State, the District of Columbia, or a territory of the United States to practice law or appear before the courts of that State or territory, or by another duly authorized representative. An attorney, or other duly authorized representative, who represents a party shall file according to the filing and service procedures contained in § 604.30 and § 604.31.

(b) The parties to the hearing are the respondent(s) named in the hearing order, the complainant(s), and FTA, as represented by the PO.

(c) The parties to the hearing may agree to extend for a reasonable period of time the time for filing a document under this part. If the parties agree, the PO shall grant one extension of time to each party. The party seeking the extension of time shall submit a draft order to the PO to be signed by the PO and filed with the hearing docket. The PO may grant additional oral requests for an extension of time where the parties agree to the extension.

(d) An extension of time granted by the PO for any reason extends the due date for the PO's recommended decision and for the final agency decision by the length of time in the PO's extension.

§ 604.38 Discovery.

(a) Permissible forms of discovery shall be within the discretion of the PO.

(b) The PO shall limit the frequency and extent of discovery permitted by this section if a party shows that:

(1) The information requested is cumulative or repetitious;

(2) The information requested may be obtained from another less burdensome and more convenient source;

(3) The party requesting the information has had ample opportunity to obtain the information through other discovery methods permitted under this section; or

(4) The method or scope of discovery requested by the party is unduly burdensome or expensive.

§ 604.39 Depositions.

(a) For good cause shown, the PO may order that the testimony of a witness may be taken by deposition and that the witness produce documentary evidence in connection with such testimony. Generally, an order to take the deposition of a witness is entered only if:

(1) The person whose deposition is to be taken would be unavailable at the hearing;

(2) The deposition is deemed necessary to perpetuate the testimony of the witness; or

(3) The taking of the deposition is necessary to prevent undue and excessive expense to a party and will not result in undue burden to other parties or in undue delay.

(b) Any party to the hearing desiring to take the deposition of a witness according to the terms set out in this subpart, shall file a motion with the PO, with a copy of the motion served on each party. The motion shall include:

(1) The name and residence of the witness;

(2) The time and place for the taking of the proposed deposition;

(3) The reasons why such deposition should be taken; and

(4) A general description of the matters concerning which the witness will be asked to testify.

(c) If good cause is shown in the motion, the PO in his or her discretion, issues an order authorizing the deposition and specifying the name of the witness to be deposed, the location and time of the deposition and the general scope and subject matter of the testimony to be taken.

(d) Witnesses whose testimony is taken by deposition shall be sworn or shall affirm before any questions are put to them. Each question propounded shall be recorded and the answers of the witness transcribed verbatim. The written transcript shall be subscribed by the witness, unless the parties by stipulation waive the signing, or the witness is ill, cannot be found, or refuses to sign. The reporter shall note the reason for failure to sign.

§ 604.40 Public disclosure of evidence.

(a) Except as provided in this section, the hearing shall be open to the public.

(b) The PO may order that any information contained in the record be withheld from public disclosure. Any person may object to disclosure of information in the record by filing a written motion to withhold specific information with the PO. The person shall state specific grounds for nondisclosure in the motion.

(c) The PO shall grant the motion to withhold information from public disclosure if the PO determines that disclosure would be in violation of the Privacy Act, would reveal trade secrets or privileged or confidential commercial or financial information, or is otherwise prohibited by law.

§ 604.41 Standard of proof.

The PO shall issue a recommended decision or shall rule in a party's favor only if the decision or ruling is supported by a preponderance of the evidence.

§ 604.42 Burden of proof.

(a) The burden of proof of noncompliance with this part, determination, or agreement issued under the authority of the Federal Transit Laws is on the registered charter provider.

(b) Except as otherwise provided by statute or rule, the proponent of a motion, request, or order has the burden of proof.

§ 604.43 Offer of proof.

A party whose evidence has been excluded by a ruling of the PO, during a hearing in which the respondent had an opportunity to respond to the offer of proof, may offer the evidence on the record when filing an appeal.

§ 604.44 Record.

(a) The transcript of all testimony in the hearing, all exhibits received into evidence, all motions, applications requests and rulings, and all documents included in the hearing record shall constitute the exclusive record for decision in the proceedings and the basis for the issuance of any orders.

(b) Any interested person may examine the record by entering the docket number at *http://www.regulations.gov* or after payment of reasonable costs for search and reproduction of the record.

§ 604.45 Waiver of procedures.

(a) The PO shall waive such procedural steps as all parties to the hearing agree to waive before issuance of an initial decision.

(b) Consent to a waiver of any procedural step bars the raising of this issue on appeal.

(c) The parties may not by consent waive the obligation of the PO to enter a recommended decision on the record.

§ 604.46 Recommended decision by a PO.

(a) The PO shall issue a recommended decision based on the record developed during the proceeding and shall send the recommended decision to the Chief Counsel for ratification or modification not later than 110 days after the referral from the Chief Counsel.

(b) The Chief Counsel shall ratify or modify the PO's recommended decision within 30 days of receiving the recommended decision. The Chief Counsel shall serve his or her decision, which is capable of being appealed to the Administrator, on all parties to the proceeding.

§ 604.47 Remedies.

(a) If the Chief Counsel determines that a violation of this part occurred, he or she may take one or more of the following actions:

(1) Bar the recipient from receiving future Federal financial assistance from FTA;

(2) Order the withholding of a reasonable percentage of available Federal financial assistance; or

(3) Pursue suspension and debarment of the recipient, its employees, or its contractors.

(b) In determining the type and amount of remedy, the Chief Counsel shall consider the following factors:

(1) The nature and circumstances of the violation;

(2) The extent and gravity of the violation (''extent of deviation from regulatory requirements'');

(3) The revenue earned (''economic benefit'') by providing the charter service;

(4) The operating budget of the recipient;

(5) Such other matters as justice may require; and

(6) Whether a recipient provided service described in a cease and desist order after issuance of such order by the Chief Counsel.

(c) The Chief Counsel office may mitigate the remedy when the recipient can document corrective action of alleged violation. The Chief Counsel's decision to mitigate a remedy shall be determined on the basis of how much corrective action was taken by the recipient and when it was taken. Systemic action to prevent future violations will be given greater consideration than action simply to remedy violations identified during FTA's inspection or identified in a complaint.

(d) In the event the Chief Counsel finds a pattern of violations, the remedy ordered shall bar a recipient from receiving Federal transit assistance in an amount that the Chief Counsel considers appropriate.

(e) The Chief Counsel may make a decision to withhold Federal financial assistance in a lump sum or over a period of time not to exceed five years.

Subpart J—Appeal to Administrator and Final Agency Orders

§ 604.48 Appeal from Chief Counsel decision.

(a) Each party adversely affected by the Chief Counsel's office decision may file an appeal with the Administrator within 21 days of the date of the Chief Counsel's issued his or her decision. Each party may file a reply to an appeal within 21 days after it is served on

the party. Filing and service of appeals and replies shall be by personal delivery consistent with §§ 604.30 and 604.31.

(b) If an appeal is filed, the Administrator reviews the entire record and issues a final agency decision based on the record that either accepts, rejects, or modifies the Chief Counsel's decision within 30 days of the due date of the reply. If no appeal is filed, the Administrator may take review of the case on his or her own motion. If the Administrator finds that the respondent is not in compliance with this part, the final agency order shall include a statement of corrective action, if appropriate, and identify remedies.

(c) If no appeal is filed, and the Administrator does not take review of the decision by the office on the Administrator's own motion, the Chief Counsel's decision shall take effect as the final agency decision and order on the twenty-first day after the actual date the Chief Counsel's decision was issued.

(d) The failure to file an appeal is deemed a waiver of any rights to seek judicial review of the Chief Counsel's decision that becomes a final agency decision by operation of paragraph (c) of this section.

§ 604.49 Administrator's discretionary review of the Chief Counsel's decision.

(a) If the Administrator takes review on the Administrator's own motion, the Administrator shall issue a notice of review by the twenty-first day after the actual date of the Chief Counsel's decision that contains the following information:

(1) The notice sets forth the specific findings of fact and conclusions of law in the decision subject to review by the Administrator.

(2) Parties may file one brief on review to the Administrator or rely on their post-hearing briefs to the Chief Counsel's office. Briefs on review shall be filed not later than 10 days after service of the notice of review. Filing and service of briefs on review shall be by personal delivery consistent with § 604.30 and § 604.31.

(3) The Administrator issues a final agency decision and order within 30 days of the due date of the briefs on review. If the Administrator finds that the respondent is not in compliance with this part, the final agency order shall include a statement of corrective action, if appropriate, and identify remedies.

(b) If the Administrator takes review on the Administrator's own motion, the decision of the Chief Counsel is stayed pending a final decision by the Administrator.

Subpart K—Judicial Review

§ 604.50 Judicial review of a final decision and order.

(a) A person may seek judicial review in an appropriate United States District Court of a final decision and order of the Administrator as provided in 5 U.S.C. 701–706. A party seeking judicial review of a final decision and order shall file a petition for review with the Court not later than 60 days after a final decision and order is effective.

(b) The following do not constitute final decisions and orders subject to judicial review:

(1) FTA's decision to dismiss a complaint as set forth in § 604.29;

(2) A recommended decision issued by a PO at the conclusion of a hearing; or

(3) A Chief Counsel decision that becomes the final decision of the Administrator because it was not appealed within the stated timeframes.

APPENDIX A TO PART 604—LISTING OF HUMAN SERVICE FEDERAL FINANCIAL ASSISTANCE PROGRAMS

FEDERAL PROGRAMS PROVIDING TRANSPORTATION ASSISTANCE

1	Food Stamp, Employment and Training Program.	Food and Nutrition Service	Department of Agriculture.
2	Voluntary Public School Choice.	Office of Innovation and Improvement.	Department of Education.

FEDERAL PROGRAMS PROVIDING TRANSPORTATION ASSISTANCE—Continued

3	Assistance for Education of All Children with Disabilities—IDEA.	Office of Special Education and Rehabilitative Services.	Department of Education.
4	Centers for Independent Living.	Office of Special Education and Rehabilitative Services.	Department of Education.
5	Independent Living for Older Individuals Who Are Blind.	Office of Special Education and Rehabilitative Services.	Department of Education.
6	Independent Living State Grants.	Office of Special Education and Rehabilitative Services.	Department of Education.
7	Supported Employment Services for Individuals with Most Significant Disabilities.	Office of Special Education and Rehabilitative Services.	Department of Education.
8	Vocational Rehabilitative Grants.	Office of Special Education and Rehabilitative Services.	Department of Education.
9	Social Service Block Grant	Administration for Children and Families.	Department of Health and Human Services.
10 ...	Child Care and Development Fund.	Administration for Children and Families.	Department of Health and Human Services.
11 ...	Head Start	Administration for Children and Families.	Department of Health and Human Services.
12 ...	Refugee and Entrant Assistance Discretionary Grants.	Administration for Children and Families.	Department of Health and Human Services.
13 ...	Refugee and Entrant Assistance State Administered Programs.	Administration for Children and Families.	Department of Health and Human Services.
14 ...	Refugee and Entrant Targeted Assistance.	Administration for Children and Families.	Department of Health and Human Services.
15 ...	Refugee and Entrant Assistance Voluntary Agency Programs.	Administration for Children and Families.	Department of Health and Human Services.
16 ...	State Development Disabilities Council and Protection & Advocacy.	Administration for Children and Families.	Department of Health and Human Services.
17 ...	Temporary Assistance to Needy Families.	Administration for Children and Families.	Department of Health and Human Services.
18 ...	Community Services Block Grant.	Administration for Children and Families.	Department of Health and Human Services.
19 ...	Promoting Safe and Stable Families.	Administration for Children and Families.	Department of Health and Human Services.
20 ...	Developmental Disabilities Projects of National Significance.	Administration for Children and Families.	Department of Health and Human Services.
21 ...	Grants for Supportive Services and Senior Centers.	Administration on Aging	Department of Health and Human Services.
22 ...	Programs for American Indian, Alaskan Native and Native Hawaii Elders.	Administration on Aging	Department of Health and Human Services.
23 ...	Medicaid	Centers for Medicaid and Medicare.	Department of Health and Human Services.
24 ...	State Health Insurance Program.	Centers for Medicaid and Medicare.	Department of Health and Human Services.

FEDERAL PROGRAMS PROVIDING TRANSPORTATION ASSISTANCE—Continued

25 ...	Home and Community Base Waiver.	Centers for Medicaid and Medicare.	Department of Health and Human Services.
26 ...	Community Health Centers	Health Resources and Services Administration.	Department of Health and Human Services.
27 ...	Healthy Communities	Health Resources and Services Administration.	Department of Health and Human Services.
28 ...	HIV Care Formula Program	Health Resources and Services Administration.	Department of Health and Human Services.
29 ...	Maternal and Child Health Block Grant.	Health Resources and Services Administration.	Department of Health and Human Services.
30 ...	Rural Health Care Network	Health Resources and Services Administration.	Department of Health and Human Services.
31 ...	Rural Health Care Outreach Program.	Health Resources and Services Administration.	Department of Health and Human Services.
32 ...	Health Start Initiative	Health Resources and Services Administration.	Department of Health and Human Services.
33 ...	Ryan White Care Act Programs.	Health Resources and Services Administration.	Department of Health and Human Services.
34 ...	Substance Abuse Prevention and Treatment Block Grant.	Substance Abuse and Mental Health Services Administration.	Department of Health and Human Services.
35 ...	Prevention and Texas Block Grant.	Substance Abuse and Mental Health Services Administration.	Department of Health and Human Services.
36 ...	Community Development Block Grant.	Community Planning and Development.	Department of Housing and Urban Development.
37 ...	Housing Opportunities for Persons with AIDS.	Community Planning and Development.	Department of Housing and Urban Development.
38 ...	Supportive Housing Program.	Community Planning and Development.	Department of Housing and Urban Development.
39 ...	Revitalization of Severely Distressed Public Housing.	Public and Indian Housing ..	Department of Housing and Urban Development.
40 ...	Indian Employment Assistance.	Bureau of Indian Affairs	Department of the Interior.
41 ...	Indian Employment, Training, and Related Services.	Bureau of Indian Affairs	Department of the Interior.
42 ...	Black Lung Benefits	Employment Standards Administration.	Department of Labor.
43 ...	Senior Community Services Employment Program.	Employment Standards Administration.	Department of Labor.
44 ...	Job Corps	Employment and Training Administration.	Department of Labor.
45 ...	Migrant and Seasonal Farm Worker.	Employment and Training Administration.	Department of Labor.
46 ...	Native American Employment and Training.	Employment and Training Administration.	Department of Labor.
47 ...	Welfare to Work Grants for Tribes.	Employment and Training Administration.	Department of Labor.
48 ...	Welfare to Work for States and Locals.	Employment and Training Administration.	Department of Labor.
49 ...	Work Incentive Grants	Employment and Training Administration.	Department of Labor.
50 ...	Workforce Investment Act Adult Services Program.	Employment and Training Administration.	Department of Labor.

FEDERAL PROGRAMS PROVIDING TRANSPORTATION ASSISTANCE—Continued

51 ...	Workforce Investment Act Adult Dislocated Worker Program.	Employment and Training Administration.	Department of Labor.
52 ...	Workforce Investment Act Youth Activities Program.	Employment and Training Administration.	Department of Labor.
53 ...	Homeless Veterans Reintegration Program.	Veterans Employment & Training Service.	Department of Labor.
54 ...	Veterans Employment Program.	Veterans Employment & Training Service.	Department of Labor.
55 ...	Elderly and Persons with Disability.	Federal Transit Administration.	Department of Transportation.
56 ...	New Freedom Program	Federal Transit Administration.	Department of Transportation.
57 ...	Job Access and Reverse Commute Program.	Federal Transit Administration.	Department of Transportation.
58 ...	Non-Urbanized Area Program.	Federal Transit Administration.	Department of Transportation.
59 ...	Capital Discretionary Program.	Federal Transit Administration.	Department of Transportation.
60 ...	Urbanized Area Formula Program.	Federal Transit Administration.	Department of Transportation.
61 ...	Automobiles and Adaptive Equipment.	Veterans Benefits Administration.	Department of Veterans Affairs.
62 ...	Homeless Provider Grants	Veterans Health Administration.	Department of Veterans Affairs.
63 ...	Veterans Medical Care Benefits.	Veterans Health Administration.	Department of Veterans Affairs.
64 ...	Ticket to Work Program	Social Security Administration.	Department of Veterans Affairs.

APPENDIX B TO PART 604—REASONS FOR REMOVAL

The following is guidance on the terms contained in section 604.26(d) concerning reasons for which FTA may remove a registered charter provider or a qualified human service organization from the FTA charter registration Web site.

What is bad faith?

Bad faith is the actual or constructive fraud or a design to mislead or deceive another or a neglect or refusal to fulfill a duty or contractual obligation. It is not an honest mistake. Black's Law Dictionary, Revised Fourth Edition, West Publishing Company, St. Paul, Minn., 1968.

For example, it would be bad faith for a registered charter provider to respond to a recipient's notification to registered charter providers of a charter service opportunity stating that it would provide the service with no actual intent to perform the charter service. It would also be bad faith if the registered charter provider fails to contact the customer or provide a quote for charter service within a reasonable time. Typically, if a registered charter provider fails to contact a customer or fails to provide a price quote to the customer at least 14 business days before an event, then FTA may remove the registered charter provider from the registration Web site, which would allow a transit agency to step back in to provide the service because the registered charter provider's response to the email would no longer be effective because it is not registered.

Further, it would be bad faith for a registered charter provider to submit a quote for charter services knowing that the price is three to four times higher because of the distance the registered charter provider must travel (deadhead time). In those situations, FTA may interpret such quotes as bad faith because they appear to be designed to prevent the local transit agency from providing the service.

On the other hand, FTA would not interpret an honest mistake of fact as bad faith. For example, if a registered charter provider fails to provide charter service in response to a recipient's notification when it honestly mistook the date, place or time the service was to be provided. It would not be bad faith if the registered charter provider responded affirmatively to the email notification sent by the public transit agency, but then later

learned it could not perform the service and provided the transit agency reasonable notice of its changed circumstances.

What is fraud?

Fraud is the suggestion or assertion of a fact that is not true, by one who has no reasonable ground for believing it to be true; the suppression of a fact by one who is bound to disclose it; one who gives information of other facts which are likely to mislead; or a promise made without any intention of performing it. Black's Law Dictionary, Revised Fourth Edition, West Publishing Company, St. Paul, Minn., 1968.

Examples of fraud include but are not limited to: (1) A registered charter provider indicates that it has a current state or Federal safety certification when it knows that it does not in fact have one; (2) a broker that owns no charter vehicles registers as a registered charter provider; or (3) a qualified human service organization represents that its serves the needs of the elderly, persons with disabilities, or lower-income individuals, but, in fact, only serves those populations tangentially.

What is a lapse of insurance?

A lapse of insurance occurs when there is no policy of insurance is in place. This may occur when there has been default in payment of premiums on an insurance policy and the policy is no longer in force. In addition, no other policy of insurance has taken its place. Black's Law Dictionary, Revised Fourth Edition, West Publishing Company, St. Paul, Minn., 1968.

What is a lapse of other documentation?

A lapse of other documentation means for example, but is not limited to, failure to have or loss or revocation of business license, operating authority, failure to notify of current company name, address, phone number, email address and facsimile number, failure to have a current state or Federal safety certification, or failure to provide accurate Federal or state motor carrier identifying number. Black's Law Dictionary, Revised Fourth Edition, West Publishing Company, St. Paul, Minn., 1968.

What is a complaint that does not state a claim that warrants an investigation or further action by FTA?

A complaint is a document describing a specific instance that allegedly constitutes a violation of the charter service regulations set forth in 49 CFR 604.28. More than one complaint may be contained in the same document. A complaint does not state a claim that warrants investigation when the allegations made in the complaint, without considering any extraneous material or matter, do not raise a genuine issue as to any material question of fact, and based on the undisputed facts stated in the complaint, there is no violation of the charter service statute or regulation as a matter of law. Based on Federal Rules of Civil Procedure, Rule 56(c).

Examples of complaints that would not warrant an investigation or further action by FTA include but are not limited to: (1) A complaint against a public transit agency that does not receive FTA funding; (2) a complaint brought against a public transit agency by a private charter operator that is neither a registered charter provider nor its duly authorized representative; (3) a complaint that gives no information as to when or where the alleged prohibited charter service took place; or (4) a complaint filed solely for the purpose of harassing the public transit agency.

[73 FR 44931, Aug. 1, 2008]

APPENDIX C TO PART 604—FREQUENTLY ASKED QUESTIONS

(a) Applicability (49 CFR Section 604.2)

(1) Q: If the requirements of the charter rule are not applicable to me for a particular service I provide, do I have to report that service in my quarterly report?

A: No. If the service you propose to provide meets one of the exemptions contained in this section, you do not have to report the service in your quarterly report.

(2) Q: If I receive funds under 49 U.S.C. Sections 5310, 5311, 5316, or 5317, may I provide charter service for any purpose?

A: No. You may only provide charter service for ''program purposes,'' which is defined in this regulation as ''transportation that serves the needs of either human service agencies or targeted populations (elderly, individuals with disabilities, and/or low income individuals) * * *'' 49 CFR Section 604.2(e). Thus, your service only qualifies for the exemption contained in this section if the service is designed to serve the needs of targeted populations. Charter service provided to a group, however, that includes individuals who are only incidentally members of those targeted populations, is not ''for program purposes'' and must meet the requirements of the rule (for example, an individual chartering a vehicle to take his relatives including elderly aunts and a cousin who is a disabled veteran to a family reunion).

(3) Q: If I am providing service for program purposes under one of the FTA programs listed in 604.2.(e), do the human service organizations have to register on the FTA Charter Registration Web site?

A: No. Because the service is exempt from the charter regulations, the organization does not have to register on the FTA Charter Registration Web site.

(4) Q: What if there is an emergency such as an apartment fire or tanker truck spill that requires an immediate evacuation, but the President, Governor, or Mayor never declares it as an emergency? Can a transit agency still assist in the evacuation efforts?

A: Yes. One part of the emergency exemption is designed to allow transit agencies to participate in emergency situations without worrying about complying with the charter regulations. Since transit agencies are often uniquely positioned to respond to such emergencies, the charter regulations do not apply. This is true whether or not the emergency is officially declared.

(5) Q: Do emergency situations involve requests from the Secret Service or the police department to transport its employees?

A. Generally no. Transporting the Secret Service or police officers for non-emergency preparedness or planning exercises does not qualify for the exemption under this section. In addition, if the Secret Service or the police department requests that a transit agency provide service when there is no immediate emergency, then the transit agency must comply with the charter service regulations.

(6) Q: Can a transit agency provide transportation to transit employees for an event such as the funeral of a transit employee or the transit agency's annual picnic?

A: Yes. These events do not fall within the definition of charter, because while the service is exclusive, it is not provided at the request of a third party and it is not at a negotiated price. Furthermore, a transit agency transporting its own employees to events sponsored by the transit agency for employee morale purposes or to events directly related to internal employee relations such as a funeral of an employee, or to the transit agency's picnic, is paying for these services as part of the transit agency's own administrative overhead.

(7) Q: Is sightseeing service considered to be charter?

A: ''Sightseeing'' is a different type of service than charter service. ''Sightseeing'' service is regularly scheduled round trip service to see the sights, which is often accompanied by a narrative guide and is open to the public for a set price. Public transit agencies may not provide sightseeing service with federally funded assets or assistance because it falls outside the definition of ''public transportation'' under 49 U.S.C. Section 5302(a) (10), unless FTA provides written concurrence for that service as an approved incidental use. While, in general, ''sightseeing'' service does not constitute charter service, ''sightseeing'' service that also meets the definition of charter service would be prohibited, even as an incidental use.

(8) Q: If a private provider receives Federal funds from one of the listed programs in this section, does that mean the private provider cannot use its privately owned equipment to provide charter service?

A: No. A private provider may still provide charter services even though it receives Federal funds under one of the programs listed in this section. The charter regulations only apply to a private provider during the time period when it is providing public transportation services under contract with a public transit agency.

(9) Q: What does FTA mean by the phrase ''non-FTA funded activities''?

A: Non-FTA funded activities are those activities that are not provided under contract or other arrangement with a public transit agency using FTA funds.

(10) Q: How does a private provider know whether an activity is FTA-funded or not?

A: The private provider should refer to the contract with the public transit agency to understand the services that are funded with Federal dollars.

(11) Q: What if the service is being provided under a capital cost of contracting scenario?

A: When a private operator receives FTA funds through capital cost of contracting, the only expenses attributed to FTA are those related to the transit service provided. The principle of capital cost of contracting is to pay for the capital portion of the privately owned assets used in public transportation (including a share of preventive maintenance costs attributable to the use of the vehicle in the contracted transit service). When a private operator uses that same privately owed vehicle in non-FTA funded service, such as charter service, the preventive maintenance and capital depreciation are not paid by FTA, so the charter rule does not apply.

(12) Q: What if the service is provided under a turn-key scenario?

A: To the extent the private charter provider is standing in the shoes of the public transit agency, the charter rules apply. Under a turn-key contract, where the private operator provides and operates a dedicated transit fleet, then the private provider must abide by the charter regulations for the transit part of its business. The charter rule would not apply, however, to other aspects of that private provider's business. FTA also recognizes that a private operator may use vehicles in its fleet interchangeably. So long as the operator is providing the number, type, and quality of vehicles contractually required to be provided exclusively for transit use and is not using FTA funds to cross-subsidize private charter service, the private operator may manage its fleet according to best business practice.

(13) Q: Does FTA's rule prohibit a private provider from providing charter service when its privately owned vehicles are not engaged in providing public transportation?

A: No. The charter rule is only applicable to the actual public transit service provided

by the private operator. As stated in 49 CFR 604.2(c), the rule does not apply to the non-FTA funded activities of private charter operators. The intent of this provision was to isolate the impacts of the charter rule on private operators to those instances where they stood in the shoes of a transit agency.

(14) Q: May a private provider use vehicles whose acquisition was federally funded to provide private charter services?

A: It depends. A private provider, who is a sub-recipient or sub-grantee, when not engaged in providing public transit using federally funded vehicles, may provide charter services using federally funded vehicles only in conformance with the charter regulations. Vehicles, whose only federal funding was for accessibility equipment, are not considered to be federally funded vehicles in this context. In other words, vehicles, whose lifts are only funded under FTA programs, may be used in charter service.

(15) Q: May a public transit agency provide ''seasonal service'' (e.g., service May through September for the summer beach season)?

A: ''Seasonal service'' that is regular and continuing, available to the public, and controlled by the public transit agency meets the definition of public transportation and is not charter service. The service should have a regular schedule and be planned in the same manner as all the other routes, except that it is run only during the periods when there is sufficient demand to justify public transit service; for example, the winter ski season or summer beach season. ''Seasonal service'' is distinguishable from charter service provided for a special event or function that occurs on an irregular basis or for a limited duration, because the seasonal transit service is regular and continuing and the demand for service is not triggered by an event or function. In addition, ''seasonal service'' is generally more than a month or two, and the schedule is consistent from year to year, based on calendar or climate, rather than being scheduled around a specific event.

(b) Definitions (49 CFR Section 604.3)

(16) Q: The definition of charter service does not include demand response services, but what happens if a group of individuals request demand response service?

A: Demand response trips provide service from multiple origins to a single destination, a single origin to multiple destinations, or even multiple origins to multiple destinations. These types of trips are considered demand response transit service, not charter service, because even though a human service agency pays for the transportation of its clients, trips are scheduled and routed for the individuals in the group. Service to individuals can be identified by vehicle routing that includes multiple origins, multiple destinations, or both, based on the needs of individual members of the group, rather than the group as a whole. For example, demand response service that takes all of the members of a group home on an annual excursion to a baseball game. Some sponsored trips carried out as part of a Coordinated Human Services Transportation Plan, such as trips for Head Start, assisted living centers, or sheltered workshops may even be provided on an exclusive basis where clients of a particular agency cannot be mixed with members of the general public or clients of other agencies for safety or other reasons specific to the needs of the human service clients.

(17) Q: Is it charter if a demand response transit service carries a group of individuals with disabilities from a single origin to a single destination on a regular basis?

A: No. Daily subscription trips between a group living facility for persons with developmental disabilities to a sheltered workshop where the individuals work, or weekly trips from the group home to a recreation center is ''special transportation'' and not considered charter service. These trips are regular and continuous and do not meet the definition of charter.

(18) Q: If a third party requests charter service for the exclusive use of a bus or van, but the transit agency provides the service free of charge, is it charter?

A: No. The definition of charter service under 49 CFR Section 604.3(c) (1), requires a negotiated price, which implies an exchange of money. Thus, free service does not meet the negotiated price requirement. Transit agencies should note, however, that a negotiated price could be the regular fixed route fare or when a third party indirectly pays for the regular fare.

(19) Q: If a transit agency accepts a subsidy for providing shuttle service for an entire baseball season, is that charter?

A: Yes. Even though there are many baseball games over several months, the service is still to an event or function on an irregular basis or for a limited duration for which a third party pays in whole or in part. In order to provide the service, a transit agency must first provide notice to registered charter providers.

(20) Q: If a transit agency contracts with a third party to provide free shuttle service during football games for persons with disabilities, is that charter?

A: Yes. Even though the service is for persons with disabilities, the transit agency receives payment from a third party for an event or function that occurs on an irregular basis or for a limited duration. In order for a transit agency to provide the service, it must provide notice to the list of registered charter providers first.

(21) Q: What if a business park pays the transit agency to add an additional stop on its fixed route to include the business park, is that charter?

A: No. The service is not to an event or function and it does not occur on an irregular basis or for a limited duration.

(22) Q: What if a university pays the transit agency to expand its regular fixed route to include stops on the campus, is that charter?

A: No. The service is not to an event or function and it does not occur on an irregular basis or for a limited duration.

(23) Q: What if a university pays the transit agency to provide shuttle service that does not connect to the transit agency's regular routes, is that charter?

A: Yes. The service is provided at the request of a third party, the university, for the exclusive use of a bus or van by the university students and faculty for a negotiated price.

(24) Q: What if the university pays the transit agency to provide shuttle service to football games and graduation, is that charter?

A: Yes. The service is to an event or function that occurs on an irregular basis or for a limited duration. As such, in order to provide the service, a transit agency must provide notice to the list of registered charter providers.

(25) Q: What happens if a transit agency does not have fixed route service to determine whether the fare charged is a premium fare?

A: A transit agency should compare the proposed fare to what it might charge for a similar trip under a demand response scenario.

(26) Q: How can a transit agency tell if the fare is ''premium''?

A: The transit agency should analyze its regular fares to determine whether the fare charged is higher than its regular fare for comparable services. For example, if the transit agency proposes to provide an express shuttle service to football games, it should look at the regular fares charged for express shuttles of similar distance elsewhere in the transit system. In addition, the service may be charter if the transit agency charges a lower fare or no fare because of a third party subsidy.

(27) Q: What if a transit agency charges a customer an up front special event fare that includes the outbound and inbound trips, is that a premium fare?

A: It depends. If the transit agency charges the outbound and inbound fares up front, but many customers don't travel both directions, then the fare may be premium. This would not be true generally for park and ride lots, where the customer parks his or her car, and, would most likely use transit to return to the same lot. Under that scenario, the transit agency may collect the regular outbound and inbound fare up front.

(28) Q: What if a transit agency wishes to create a special pass for an event or function on an irregular basis or for a limited duration that allows a customer to ride the transit system several times for the duration of the event, is that charter?

A: It depends. If the special pass costs more than the fare for a reasonable number of expected individual trips during the event, then the special pass represents a premium fare. FTA will also consider whether a third party provides a subsidy for the service.

(29) Q: Is it a third party subsidy if a third party collects the regular fixed route fare for the transit agency?

A. Generally no. If the service provided is not at the request of a third party for the exclusive use of a bus or van, then a third party collecting the fare would not qualify the service as charter. But, a transit agency has to consider carefully whether the service is at the request of an event planner. For example, a group offers to make ''passes'' for its organization and then later work out the payment to the transit agency. The transit agency can only collect the regular fare for each passenger.

(30) Q: If the transit agency is part of the local government and an agency within the local government pays for service to an event or function of limited duration or that occurs on an irregular basis, is that charter?

A: Yes. Since the agency pays for the charter service, whether by direct payment or transfer of funds through internal local government accounts, it represents a third party payment for charter service. Thus, the service would meet the definition of charter service under 49 CFR Section 604.3(c) (1).

(31) Q: What if an organization requests and pays for service through an in-kind payment such as paying for a new bus shelter or providing advertising, is that charter?

A: Yes. The service is provided at the request of a third party for a negotiated price, which would be the cost of a new bus shelter or advertising. The key here is the direct payment for service to an event or function. For instance, advertising that appears on buses for regular service does not make it charter.

(32) Q: Under the definition of ''Government Officials,'' does the government official have to currently hold an office in government?

A: Yes. In order to take advantage of the Government Official exception, the individual must hold currently a government position that is elected or appointed through a political process.

(33) Q: Does a university qualify as a QHSO?

A: No. Most universities do not have a mission of serving the needs of the elderly, persons with disabilities, or low income individuals.

(34) Q: Do the Boy Scouts of America qualify as a QHSO?

A: No. The Boy Scouts of America's mission is not to serve the needs of the elderly,

persons with disabilities, or low income individuals.

(35) Q: What qualifies as indirect financial assistance?

A: The inclusion of ''indirect'' financial assistance as part of the definition of ''recipient'' covers ''subrecipients.'' In other words, ''subrecipients'' are subject to the charter regulation. FTA modified the definition of recipient in the final rule to clarify this point.

(c) Exceptions (49 CFR Subpart B)

(36) Q: In order to take advantage of the Government Officials exception, does a transit agency have to transport only elected or appointed government officials?

A: No, but there has to be at least one elected or appointed government official on the trip.

(37) Q: If a transit agency provides notice regarding a season's worth of service and some of the service will occur in less than 30 days, does a registered charter provider have to respond within 72 hours or 14 days?

A: A transit agency should provide as much notice as possible for service that occurs over several months. Thus, a transit agency should provide notice to registered charter providers more than 30 days in advance of the service, which would give registered charter provider 14 days to respond to the notice. Under pressure to begin the service sooner, the transit agency could provide a separate notice for only that portion of the service occurring in less than 30 days.

(38) Q: Does a transit agency have to contact registered charter providers in order to petition the Administrator for an event of regional or national significance?

A: Yes. A petition for an event of regional or national significance must demonstrate that not only has the public transit agency contacted registered charter providers, but also demonstrate how the transit agency will include registered charter providers in providing the service to the event of regional or national significance.

(39) Q: Where does a transit agency have to file its petition?

A: A transit agency must file the petition with the ombudsman at *ombudsman.charterservice@dot.gov*. FTA will file all petitions in the Petitions to the Administrator docket (FTA–2007–0022) at *http://www.regulations.gov*.

(40) Q: What qualifies as a unique and time sensitive event?

A: In order to petition the Administrator for a discretionary exception, a public transit agency must demonstrate that the event is unique or that circumstances are such that there is not enough time to check with registered charter providers. Events that occur on an annual basis are generally not considered unique or time sensitive.

(41) Q: Is there any particular format for quarterly reports for exceptions?

A: No. The report must contain the information required by the regulations and clearly identify the exception under which the transit agency performed the service.

(42) Q: May a transit agency lease its vehicles to one registered charter provider if there is another registered charter provider that can perform all of the requested service with private charter vehicles?

A: No. A transit agency may not lease its vehicles to one registered charter provider when there is another registered charter provider that can perform all of the requested service. In that case, the transit vehicles would enable the first registered charter provider to charge less for the service than the second registered charter provider that uses all private charter vehicles.

(43) Q: Where do I submit my reports?

A: FTA has adapted its electronic grants making system, TEAM, to include charter rule reporting. Grantees should file the required reports through TEAM. These reports will be available to the public through FTA's charter bus service Web page at: *http://ftateamweb.fta.dot.gov/Teamweb/CharterRegistration/QueryCharterReport.aspx*. State Departments of Transportation are responsible for filing charter reports on behalf of its subrecipients that do not have access to TEAM.

(d) Registration and Notification (49 CFR Subpart C)

(44) Q: May a private provider register to receive notice of charter service requests from all 50 States?

A: Yes. A private provider may register to receive notice from all 50 States; however, a private provider should only register for those states for which it can realistically originate service.

(45) Q: May a registered charter provider select which portions of the service it would like to provide?

A: No. A registered charter provider may not ''cherry pick'' the service described in the notice. In other words, if the e-mail notification describes service for an entire football season, then a registered charter provider that responds to the notice indicating it can provide only a couple of weekends of service would be non-responsive to the e-mail notice. Public transit agencies may, however, include several individual charter events in the e-mail notification. Under those circumstances, a registered charter provider may select from those individual events to provide service.

(46) Q: May a transit agency include information on ''special requests'' from the customer in the notice to registered charter providers?

A: No. A transit agency must strictly follow the requirements of 49 CFR Section

604.14, otherwise the notice is void. A transit agency may, however, provide a generalized statement such as ''Please do not respond to this notice if you are not interested or cannot perform the service in its entirety.''

(47) Q: What happens if a transit agency sends out a notice regarding charter service, but later decides to perform the service free of charge and without a third party subsidy?

A: If a transit agency believes it may receive the authority to provide the service free of charge, with no third party subsidy, then it should send out a new e-mail notice stating that it intends to provide the service free of charge.

(48) Q: What happens if a registered charter provider initially indicates interest in providing the service described in a notice, but then later is unable to perform the service?

A: If the registered charter provider acts in good faith by providing reasonable notice to the transit agency of its changed circumstances, and that registered charter provider was the only one to respond to the notice, then the transit agency may step back in and provide the service.

(49) Q: What happens if a registered charter provider indicates interest in providing the service, but then does not contact the customer?

A: A transit agency may step back in and provide the service if the registered charter provider was the only one to respond affirmatively to the notice.

(50) Q: What happens if a registered charter provider indicates interest in providing the service, contacts the customer, and then fails to provide a price quote to the customer?

A: If the requested service is 14 days or less away, a transit agency may step back in and provide the service if the registered charter provider was the only one to respond affirmatively to the notice upon filing a complaint with FTA to remove the registered charter provider from the FTA Charter Registration Web site. If the complaint of ''bad faith'' negotiations is not sustained by FTA, the transit agency may face a penalty, as determined by FTA. If the requested service is more than 14 days away, and the transit agency desires to step back in, then upon filing a complaint alleging ''bad faith'' negotiations that is sustained by FTA, the transit agency may step back in.

(51) Q: What happens if a transit agency entered into a contract to perform charter service before the effective date of the final rule?

A: If the service described in the contract occurs after the effective date of the final rule, the service must be in conformance with the new charter regulation.

(52) Q: What if the service described in the notice requires the use of park and ride lots owned by the transit agency?

A: If the transit agency received Federal funds for those park and ride lots, then the transit agency should allow a registered charter provider to use those lots upon a showing of an acceptable incidental use (the transit agency retains satisfactory continuing control over the park and ride lot and the use does not interfere with the provision of public transportation) and if the registered charter provider signs an appropriate use and indemnification agreement.

(53) Q: What if the registered charter provider does not provide quality charter service to the customer?

A: If a registered charter provider does not provide service to the satisfaction of the customer, the customer may pursue a civil action against the registered charter provider in a court of law. If the registered charter provider also demonstrated bad faith or fraud, it can be removed from the FTA Charter Registration Web site.

(e) Complaint & Investigation Process

(54) Q: May a trade association or other operators that are unable to provide requested charter service have the right to file a complaint against the transit agency?

A: Yes. A registered charter operator or its duly authorized representative, which can include a trade association, may file a complaint under section 604.26(a). Under the new rule, a private charter operator that is not registered with FTA's charter registration Web site may not file a complaint.

(55) Q: Is there a time limit for making complaints?

A: Yes. Complaints must be filed within 90 days of the alleged unauthorized charter service.

(56) Q: Are there examples of the likely remedies FTA may impose for a violation of the charter service regulations?

A: Yes. Appendix D contains a matrix of likely remedies that FTA may impose for a violation of the charter service regulations.

(57) Q: When a complaint is filed, who is responsible for arbitration or litigation costs?

A: FTA will pay for the presiding official and the facility for the hearing, if necessary. Each party involved in the litigation is responsible for its own litigation costs.

(58) Q: What affirmative defenses might be available in the complaint process?

A: An affirmative defense to a complaint could state the applicability of one of the exceptions such as 49 CFR Section 604.6, which states that the service that was provided was within the allowable 80 hours of government official service.

(59) Q: What can a transit agency do if it believes that a registered charter provider is not bargaining in good faith with a customer?

A: If a transit agency believes that a registered charter provider is not bargaining in good faith with the customer, the transit

agency may file a complaint to remove the registered charter provider from FTA's Charter Registration Web site.

(60) Q: Does a registered charter provider have to charge the same fare or rate as a public transit agency?

A: No. A registered charter provider is not under an obligation to charge the same fare or rate as public transit agency. A registered charter provider, however, must charge commercially reasonable rates.

(61) Q: What actions can a private charter operator take when it becomes aware of a transit agency's plan to engage in charter service just before the date of the charter?

A: As soon as a registered charter provider becomes aware of an upcoming charter event that it was not contacted about, then it should request an advisory opinion and cease and desist order. If the service has already occurred, then the registered charter provider may file a complaint.

(62) Q: When a registered charter provider indicates that there are no privately owned vehicles available for lease, must the public transit agency investigate independently whether the representation by the registered charter provider is accurate?

A: No. The public transit agency is not required to investigate independently whether the registered charter provider's representation is accurate unless there is reason to suspect that the registered charter provider is committing fraud. Rather, the public transit agency need only confirm that the number of vehicles owned by all registered charter providers in the geographic service area is consistent with the registered charter provider's representation.

(63) Q: How will FTA determine the remedy for a violation of the charter regulations?

A: Remedies will be based upon the facts of the situation, including but not limited to, the extent of deviation from the regulations and the economic benefit from providing the charter service. See section 604.47 and Appendix D for more details.

(64) Q: Can multiple violations in a single finding stemming from a single complaint constitute a pattern of violations?

A: Yes. A pattern of violations is defined as more than one finding of unauthorized charter service under this part by FTA beginning with the most recent finding of unauthorized charter service and looking back over a period not to exceed 72 months. While a single complaint may contain several allegations, the complaint must allege more than a single event that included unauthorized charter service in order to establish a pattern of violations.

(f) Miscellaneous

(65) Q: If a grantee operates assets that are locally funded are such assets subject to the charter regulations?

A: It depends. If a recipient receives FTA funds for operating assistance or stores its vehicles in a FTA-funded facility or receives indirect FTA assistance, then the charter regulations apply. The fact that the vehicle was locally funded does not make the recipient exempt from the charter regulations. If both operating and capital funds are locally supplied, then the vehicle is not subject to the charter service regulations.

(66) Q: What can a public transit agency do if there is a time sensitive event, such as a presidential inauguration, for which the transit agency does not have time to consult with all the private charter operators in its area?

A: 49 Section 604.11 provides a process to petition the FTA Administrator for permission to provide service for a unique and time sensitive event. A presidential inauguration, however, is not a good example of a unique and time sensitive event. A presidential inauguration is an event with substantial advance planning and a transit agency should have time to contact private operators. If the inauguration also includes ancillary events, the public transit agency should refer the customer to the registration list.

(67) Q: Are body-on-van-chassis vehicles classified as buses or vans under the charter regulation?

A: Body-on-van-chassis vehicles are treated as vans under the charter regulation.

(68) Q: When a new operator registers, may recipients continue under existing contractual agreements for charter service?

A: Yes. If the contract was signed before the new private operator registered, the arrangement can continue for up to 90 days. During that 90 day period, however, the public transit agency must enter into an agreement with the new registrant. If not, the transit agency must terminate the existing agreement for all registered charter providers.

(69) Q: Must a public transit agency continue to serve as the lead for events of regional or national significance, if after consultation with all registered charter providers, registered charter providers have enough vehicles to provide all of the service to the event?

A. No. If after consultation with registered charter providers, there is no need for the public transit vehicles, then the public transit agency may decline to serve as the lead and allow the registered charter providers to work directly with event organizers. Alternatively, the public transit entity may retain the lead and continue to coordinate with event organizers and registered charter providers.

(70) Q: What happens if a customer specifically requests a trolley from a transit agency and there are no registered charter providers that have a trolley?

A: FTA views trolleys as buses. Thus, all the privately owned buses must be engaged in service and unavailable before a transit agency may lease its trolley. Alternatively, the transit agency could enter into an agreement with all registered charter providers in its geographic service area to allow it to provide trolley charter services.

(71) Q: How does a transit agency enter into an agreement with all registered charter providers in its geographic service area?

A: A public transit agency should send an email notice to all registered charter providers of its intent to provide charter service. A registered charter provider must respond to the email notice either affirmatively or negatively. The transit agency should also indicate in the email notification that failure to respond to the email notice results in concurrence with the notification.

(72) Q: Can a registered charter provider rescind its affirmative response to an email notification?

A: Yes. If after further consideration or a change in circumstances for the registered charter provider, a registered charter provider may notify the customer and the transit agency that it is no longer interested in providing the requested charter service. At that point, the transit agency may make the decision to step back in to provide the service.

(73) Q: What happens after a registered charter provider submits a quote for charter services to a customer? Does the transit agency have to review the quote?

A: Once a registered charter provider responds affirmatively to an email notification and provides the customer a commercially reasonable quote, then the transit agency may not step back in to perform the service. A transit agency is not responsible for reviewing the quote submitted by a registered charter provider. FTA recommends that a registered charter provider include in the quote an expiration date for the offer.

[73 FR 44931, Aug. 1, 2008]

APPENDIX D TO PART 604—TABLE OF POTENTIAL REMEDIES

Remedy Assessment Matrix:

Extent of Deviation from Regulatory Requirements

		Major	Moderate	Minor
Economic Benefit	Major	$25,000/violation to 20,000	$19,999/violation to 15,000	$14,999/violation to 11,000
	Moderate	$10,999/violation to 8,000	$7,999/violation to 5,000	$4,999/violation to 3,000
	Minor	$2,999/violation to 1,500	1,499/violation to 500	$499/violation to 100

FTA's Remedy Policy

— This remedy policy applies to decisions by the Chief Counsel, Presiding Officials, and final determinations by the Administrator.

— Remedy calculation is based on the following elements:

(1) The nature and circumstances of the violation;

(2) The extent and gravity of the violation (''extent of deviation from regulatory requirements'');

(3) The revenue earned (''economic benefit'') by providing the charter service;

(4) The operating budget of the recipient;

(5) Such other matters as justice may require; and

(6) Whether a recipient provided service described in a cease and desist order after issuance of such order by the Chief Counsel.

[73 FR 44935, Aug. 1, 2008; 73 FR 46554, Aug. 11, 2008]

PART 605—SCHOOL BUS OPERATIONS

Subpart A—General

Sec.

605.1 Purpose.
605.2 Scope.
605.3 Definitions.

605.4 Public hearing requirement.

Subpart B—School Bus Agreements

605.10 Purpose.
605.11 Exemptions.
605.12 Use of project equipment.
605.13 Tripper service.
605.14 Agreement.
605.15 Content of agreement.
605.16 Notice.
605.17 Certification in lieu of notice.
605.18 Comments by private school bus operators.
605.19 Approval of school bus operations.

Subpart C—Modification of Prior Agreements and Amendment of Application for Assistance

605.20 Modification of prior agreements.
605.21 Amendment of applications for assistance.

Subpart D—Complaint Procedures and Remedies

605.30 Filing a complaint.
605.31 Notification to the respondent.
605.32 Accumulation of evidentiary material.
605.33 Adjudication.
605.34 Remedy where there has been a violation of the agreement.
605.35 Judicial review.

Subpart E—Reporting and Records

605.40 Reports and information.
APPENDIX A TO PART 605

AUTHORITY: Federal Mass Transit Act of 1964, as amended (49 U.S.C. 1601 *et seq.*); 23 U.S.C. 103(e)(4); 23 U.S.C. 142 (a) and (c); and 49 CFR 1.51.

SOURCE: 41 FR 14128, Apr. 1, 1976, unless otherwise noted.

Subpart A—General

§ 605.1 Purpose.

(a) The purpose of this part is to prescribe policies and procedures to implement section 109(a) of the National Mass Transportation Assistance Act of 1974 (Pub. L. 93–503; November 26, 1974; 88 Stat. 1565). Section 109(a) adds a new section 3(g) to the Federal Mass Transit Act of 1964, as amended (49 U.S.C. 1602(g)) and differs from section 164(b) of the Federal-Aid Highway Act of 1973 (49 U.S.C. 1602a(b)) in that section 3(g) applies to all grants for the construction or operation of mass transportation facilities and equipment under the Federal Mass Transit Act, and is not limited to grants for the purchase of buses as is section 164(b).

(b) By the terms of section 3(g) no Federal financial assistance may be provided for the construction or operation of facilities and equipment for use in providing public mass transportation service to an applicant unless the applicant and the Administrator enter into an agreement that the applicant will not engage in school bus operations exclusively for the transportation of students and school personnel, in competition with private school bus operators.

§ 605.2 Scope.

These regulations apply to all recipients of financial assistance for the construction or operation of facilities and equipment for use in providing mass transportation under: (a) The Federal Mass Transit Act of 1964, as amended (49 U.S.C. 1601 *et seq.*); (b) 23 U.S.C. 142 (a) and (c); and 23 U.S.C. 103 (e)(4).

§ 605.3 Definitions.

(a) Except as otherwise provided, terms defined in the Federal Mass Transit Act of 1964, as amended (49 U.S.C. 1604, 1608) are used in this part as so defined.

(b) For purposes of this part—

The Acts means the Federal Mass Transit Act of 1964, as amended (49 U.S.C. 1601 *et seq.*); 23 U.S.C. 142 (a) and (c); and 23 U.S.C. 103(e)(4).

Administrator means the Federal Mass Transit Administrator or his designee.

Adequate transportation means transportation for students and school personnel which the Administrator determines conforms to applicable safety laws; is on time; poses a minimum of discipline problems; is not subject to fluctuating rates; and is operated efficiently and in harmony with state educational goals and programs.

Agreement means a contractual agreement required under section 3(g) of the Federal Mass Transit Act of 1964, as amended (49 U.S.C. 1602(g)).

Applicant means applicant for assistance under the Acts.

Assistance means Federal financial assistance for the purchase of buses

and the construction or operation of facilities and equipment for use in providing mass transportation services under the Acts, but does not include research, development and demonstration projects funded under the Acts.

Grant contract means the contract between the Government and the grantee which states the terms and conditions for assistance under the Acts.

Government means the Government of the United States of America.

Grantee means a recipient of assistance under the Acts.

Incidental means the transportation of school students, personnel and equipment in charter bus operations during off peak hours which does not interfere with regularly scheduled service to the public (as defined in the Opinion of the Comptroller General of the United States, B160204, December 7, 1966, which is attached as appendix A of this part).

Interested party means an individual, partnership, corporation, association or public or private organization that has a financial interest which is adversely affected by the act or acts of a grantee with respect to school bus operations.

Reasonable Rates means rates found by the Administration to be fair and equitable taking into consideration the local conditions which surround the area where the rate is in question.

School bus operations means transportation by bus exclusively for school students, personnel and equipment in Type I and Type II school vehicles as defined in Highway Safety Program Standard No. 17.

Tripper service means regularly scheduled mass transportation service which is open to the public, and which is designed or modified to accommodate the needs of school students and personnel, using various fare collections or subsidy systems. Buses used in tripper service must be clearly marked as open to the public and may not carry designations such as ''school bus'' or ''school special''. These buses may stop only at a grantee or operator's regular service stop. All routes traveled by tripper buses must be within a grantee's or operator's regular route service as indicated in their published route schedules.

Urban area means the entire area in which a local public body is authorized by appropriate local, State and Federal law to provide regularly scheduled mass transportation service. This includes all areas which are either: (a) Within an ''urbanized area'' as defined and fixed in accordance with 23 CFR part 470, subpart B; or (b) within an ''urban area'' or other built-up place as determined by the Secretary under section 12(c)(4) of the Federal Mass Transit Act of 1964, as amended (49 U.S.C. 1608(c)(4)).

§ 605.4 Public hearing requirement.

Each applicant who engages or wishes to engage in school bus operations shall afford an adequate opportunity for the public to consider such operations at the time the applicant conducts public hearings to consider the economic, social or environmental effects of its requested Federal financial assistance under section 3(d) of the Federal Mass Transit Act of 1964, as amended (49 U.S.C. 1602(d)).

Subpart B—School Bus Agreements

§ 605.10 Purpose.

The purpose of this subpart is to formulate procedures for the development of an agreement concerning school bus operations.

§ 605.11 Exemptions.

A grantee or applicant may not engage in school bus operations in competition with private school bus operators unless it demonstrates to the satisfaction of the Administrator as follows:

(a) That it operates a school system in its urban area and also operates a separate and exclusive school bus program for that school system; or

(b) That private school bus operators in the urban area are unable to provide adequate transportation, at a reasonable rate, and in conformance with applicable safety standards; or

(c) That it is a state or local public body or agency thereof (or a direct predecessor in interest which has acquired the function of so transporting schoolchildren and personnel along with facilities to be used therefor) who

was so engaged in school bus operations:

(1) In the case of a grant involving the purchase of buses—anytime during the 12-month period immediately prior to August 13, 1973.

(2) In the case of a grant for construction or operating of facilities and equipment made pursuant to the FT Act as amended (49 U.S.C. 1601 *et seq.*), anytime during the 12-month period immediately prior to November 26, 1974.

§ 605.12 Use of project equipment.

No grantee or operator of project equipment shall engage in school bus operations using buses, facilities or equipment funded under the Acts. A grantee or operator may, however, use such buses, facilities and equipment for the transportation of school students, personnel and equipment in incidental charter bus operations. Such use of project equipment is subject to part 604 of Federal Mass Transit Regulations.

§ 605.13 Tripper service.

The prohibition against the use of buses, facilities and equipment funded under the Acts shall not apply to tripper service.

§ 605.14 Agreement.

Except as provided in § 605.11 no assistance shall be provided under the Acts unless the applicant and the Administrator shall have first entered into a written agreement that the applicant will not engage in school bus operations exclusively for the transportation of students and school personnel in competition with private school bus operators.

§ 605.15 Content of agreement.

(a) Every grantee who is not authorized by the Administrator under § 605.11 of this part to engage in school bus operations shall, as a condition of assistance, enter into a written agreement required by § 605.14 which shall contain the following provisions:

(1) The grantee and any operator of project equipment agrees that it will not engage in school bus operations in competition with private school bus operators.

(2) The grantee agrees that it will not engage in any practice which constitutes a means of avoiding the requirements of this agreement, part 605 of the Federal Mass Transit Regulations, or section 164(b) of the Federal-Aid Highway Act of 1973 (49 U.S.C. 1602a(b)).

(b) Every grantee who obtains authorization from the Administrator to engage in school bus operations under § 605.11 of this part shall, as a condition of assistance, enter into a written agreement required by § 605.14 of this part which contains the following provisions:

(1) The grantee agrees that neither it nor any operator of project equipment will engage in school bus operations in competition with private school bus operators except as provided herein.

(2) The grantee, or any operator of project equipment, agrees to promptly notify the Administrator of any changes in its operations which might jeopardize the continuation of an exemption under § 605.11.

(3) The grantee agrees that it will not engage in any practice which constitutes a means of avoiding the requirements of this agreement, part 605 of the Federal Transit Administration regulations or section 164(b) of the Federal-Aid Highway Act of 1973 (49 U.S.C. 1602a(b)).

(4) The grantee agrees that the project facilities and equipment shall be used for the provision of mass transportation services within its urban area and that any other use of project facilities and equipment will be incidental to and shall not interfere with the use of such facilities and equipment in mass transportation service to the public.

§ 605.16 Notice.

(a) Each applicant who engages or wishes to engage in school bus operations shall include the following in its application:

(1) A statement that it has provided written notice to all private school bus operators operating in the urban area of its application for assistance and its proposed or existing school bus operations;

(2) A statement that it has published in a newspaper of general circulation in

its urban area a notice of its application and its proposed or existing school bus operations;

(b) The notice required by paragraphs (a) (1) and (2) of this section shall include the following information:

(1) A description of the area to be served by the applicant.

(2) An estimation of the number of each type of bus which will be employed on the proposed school bus operations, and the number of weekdays those buses will be available for school bus operations.

(3) A statement of the time, date, and place of public hearings required under section 3(d) of the Federal Mass Transit Act of 1964, as amended (49 U.S.C. 1602(d)), to be held on the application for assistance.

(4) A statement setting forth reasons the applicant feels it should be allowed to engage in school bus operations under § 605.11 of this part.

(c) Copies of the application for assistance and notice required by paragraph (a) of this shall be available for inspection during the regular business hours at the office of the applicant.

§ 605.17 Certification in lieu of notice.

If there are no private school bus operators operating in the applicant's urban area, the applicant may so certify in its application in lieu of meeting the requirements of § 605.16. This certification shall be accompanied by a statement that the applicant has published, in a newspaper of general circulation in its urban area, a notice stating that it has applied for assistance as provided under § 605.16(b) and that it has certified that there are no private school bus operators operating in its urban area. A copy of the notice as published shall be included.

§ 605.18 Comments by private school bus operators.

Private school bus operators may file written comments on an applicant's proposed or existing school bus operations at the time of the public hearing held pursuant to section 3(d) of the Federal Mass Transit Act of 1964, as amended (49 U.S.C. 1602(d)). The comments of private school bus operators must be submitted by the applicant to the Administrator together with the transcript of this public hearing.

§ 605.19 Approval of school bus operations.

(a) The Administrator will consider the comments filed by private school bus operators prior to making any findings regarding the applicant's proposed or existing school bus operations.

(b) After a showing by the applicant that it has complied with the requirements of 49 U.S.C. 1602(d) and this subpart, the Administrator may approve its school bus operations.

(c) If the Administrator finds that the applicant has not complied with the notice requirement of this part or otherwise finds that the applicant's proposed or existing school bus operations are unacceptable, he will so notify the applicant in writing, stating the reasons for his findings.

(d) Within 20 days after receiving notice of adverse findings from the Administrator, an applicant may file written objections to the Administrator's findings or submit a revised proposal for its school bus operations. If an applicant revises its proposed or existing school bus operations, it shall mail a copy of these revisions along with the findings of the administrator to private school bus operators required to be notified under § 605.16.

(e) Private school bus operators who receive notice under paragraph (d) of this section may within 20 days after receipt of notice file written comments on the proposed revisions with the Administrator. The Administrator will consider these comments prior to his approval of a proposed revision by the applicant.

(f) Upon receipt of notice of approval of its school bus operations, the applicant may enter into an agreement with the Administrator under § 605.14.

Subpart C—Modification of Prior Agreements and Amendment of Application for Assistance

§ 605.20 Modification of prior agreements.

(a) Any grantee which, prior to the adoption of this part, entered into an agreement required by section 164(b) of the Federal-Aid Highway Act of 1973 (49

U.S.C. 1602(a)(b)), or section 3(g) of the Federal Mass Transit Act of 1964, as amended (49 U.S.C. 1602(g)), who engages or wishes to engage in school bus operations in competition with private school bus operators, shall seek modification of that agreement in accordance with paragraphs (b) through (d) of this section.

(b) The grantee shall develop a statement setting forth in detail the reasons it feels it should be allowed to engage in school bus operations under § 605.11 of this part. A copy of the statement should be provided private school bus operators who provide service in the grantee's urban area.

(c) The grantee shall allow 30 days for persons receiving notice under this section to respond with written comments concerning its proposed or existing school bus operations.

(d) After receiving written comments, the grantee shall send his proposal with written comments thereon to the Administrator for his review under § 605.17.

§ 605.21 Amendment of applications for assistance.

Pending applications for assistance upon which public hearings have been held pursuant to section 3(d) of the Federal Mass Transit Act of 1964, as amended (49 U.S.C. 1602(d)), and applications which have been approved by the Administrator but for which no grant contract has been executed, shall be amended by the applicant to conform to this part by following the procedures of § 605.20(b) through (d).

Subpart D—Complaint Procedures and Remedies

§ 605.30 Filing a complaint.

Any interested party may file a complaint with the Administrator alleging a violation or violations of terms of an agreement entered into pursuant to § 605.14. A complaint must be in writing, must specify in detail the action claimed to violate the agreement, and must be accompanied by evidence sufficient to enable the Administrator to make a preliminary determination as to whether probable cause exists to believe that a violation of the agreement has taken place.

§ 605.31 Notification to the respondent.

On receipt of any complaint under § 605.30, or on his own motion if at any time he shall have reason to believe that a violation may have occurred, the Administrator will provide written notification to the grantee concerned (hereinafter called ''the respondent'') that a violation has probably occurred. The Administrator will inform the respondent of the conduct which constitutes a probable violation of the agreement.

§ 605.32 Accumulation of evidentiary material.

The Administrator will allow the respondent not more than 30 days to show cause, by submission of evidence, why no violation should be deemed to have occurred. A like period shall be allowed to the complainant, if any, during which he may submit evidence to rebut the evidence offered by the respondent. The Administrator may undertake such further investigation, as he may deem necessary, including, in his discretion, the holding of an evidentiary hearing or hearings.

§ 605.33 Adjudication.

(a) After reviewing the results of such investigation, including hearing transcripts, if any, and all evidence submitted by the parties, the Administrator will make a written determination as to whether the respondent has engaged in school bus operations in violation of the terms of the agreement.

(b) If the Administrator determines that there has been a violation of the agreement, he will order such remedial measures as he may deem appropriate.

(c) The determination by the Administrator will include an analysis and explanation of his findings.

§ 605.34 Remedy where there has been a violation of the agreement.

If the Administrator determines, pursuant to this subpart, that there has been a violation of the terms of the agreement, he may bar a grantee or operator from the receipt of further financial assistance for mass transportation facilities and equipment.

§ 605.35 Judicial review.

The determination of the Administrator pursuant to this subpart shall be final and conclusive on all parties, but shall be subject to judicial review pursuant to title 5 U.S.C. 701–706.

Subpart E—Reporting and Records

§ 605.40 Reports and information.

The Administrator may order any grantee or operator for the grantee, to file special or separate reports setting forth information relating to any transportation service rendered by such grantee or operator, in addition to any other reports required by this part.

APPENDIX A TO PART 605

COMPTROLLER GENERAL OF THE UNITED STATES,
Washington, DC, December 7, 1966.

DEAR MR. WILSON: The enclosure with your letter of October 4, 1966, concerns the legality of providing a grant under the Federal Mass Transit Act of 1964 to the City of San Diego, (City), California. The problem involved arises in connection with the definition in subsection 9(d)(5) of the Act, 49 U.S.C. 1608(d)(5), excluding charter or sightseeing service from the term ''mass transportation.''

It appears from the enclosure with your letter that the City originally included in its grant application a request for funds to purchase 8 buses designed for charter service. Subsequently the City amended its application by deleting a request for a portion of the funds attributable to the charter bus coaches. However, in addition to the 8 specially designed charter buses initially applied for, the City allegedly uses about 40 of its transit type buses to a substantial extent for charter-type services. In light of these factors surrounding the application by the City, the enclosure requests our opinion with regard to the legality of grants under the Act as it applies to certain matters (in effect questions), which are numbered and quoted below and answered in the order presented.

Number one:

''The grant of funds to a City to purchase buses and equipment which are intended for substantial use in the general charter bus business as well as in the Mass Transportation type business.''

The Federal Mass Transit Act of 1964 does not authorize grants to assist in the purchase of buses or other equipment for any service other than urban mass transportation service. Section 3(a) of the Act limits the range of eligible facilities and equipment to ''* * * buses and other rolling stock, and other real or personal property needed for an efficient and coordinated mass transportation system.'' In turn, ''mass transportation'' is defined, in section 9(d)(5) of the Act, specifically to exclude charter service. We are advised by the Department of Housing and Urban Development (HUD) that under these provisions, the Department has limited its grants to the purchase of buses of types suitable to meet the needs of the particular kind of urban mass transportation proposed to be furnished by the applicant.''

HUD further advises that:

''One of the basic facts of urban mass transportation operations is that the need for rolling stock is far greater during the morning and evening rush hours on weekdays than at any other time. For that reason, any system which has sufficient rolling stock to meet the weekday rush-hour needs of its customers must have a substantial amount of equipment standing idle at other times, as well as drivers and other personnel being paid when there is little for them to do. To relieve this inefficient and uneconomical situation, quite a number of cities have offered incidental charter service using this idle equipment and personnel during the hours when the same are not needed for regularly scheduled runs. Among the cities so doing are Cleveland, Pittsburgh, Alameda, Tacoma, Detroit and Dallas.

''Such service contributes to the success of urban mass transportation operations by bringing in additional revenues and providing full employment to drivers and other employees. It may in some cases even reduce the need for Federal capital grant assistance.

''We do not consider that there is any violation of either the letter or the spirit of the Act as a result of such incidental use f buses in charter service. To guard against abuses, every capital facilities grant contract made by this Department contains the following provisions:

'' 'Sec. 4. *Use of Project Facilities and Equipment*—The Public Body agrees that the Project facilities and equipment will be used for the provision of mass transportation service within its urban area for the period of the useful life of such facilities and equipment. . . . The Public Body further agrees that during the useful life of the Project facilities and equipment it will submit to HUD such financial statements and other data as may be deemed necessary to assure compliance with this Section.' ''

It is our view that grants may be made to a city under section 3(a) of the Act to purchase buses needed by the city for an efficient and coordinated mass transportation system, even though the city may intend to use such buses for charter use when the buses are not needed on regularly scheduled runs (*i.e.*, for mass transportation purposes) and would otherwise be idle.

Number two:

''Whether a grant of such funds is proper if charter bus use is incidental to mass public transportation operations. If so, what is the definition of *incidental use.*''

We are advised by HUD that under its legislative authority, it cannot and does not take charter service requirements into consideration in any way in evaluating the needs of a local mass transportation system for buses or other equipment.

HUD further advises that:

''However, as indicated above, we are of the opinion that any lawful use of project equipment which does not detract from or interfere with the urban mass transportation service for which the equipment is needed would be deemed an incidental use of such equipment, and that such use of project equipment is entirely permissible under our legislation. What uses are in fact incidental, under this test, can be determined only on a case-by-case basis.''

In view of what we stated above in answer to the first question, the first part of question two is answered in the affirmative.

As to the second part of the question, in *Security National Insurance Co.* v. *Secuoyah Marina,* 246F.2d 830, ''incident'' is defined as meaning ''that which appertains to something else which is primary.'' Thus, we cannot say HUD's definition of *incidental use* as set forth above is unreasonable. Under the Act involved grants may be made to purchase buses only if the buses are needed for an efficient and coordinated mass transportation system. It would appear that if buses are purchased in order to meet this need, and are, in fact, used to meet such need, the use of such buses for charter service when not needed for mass transportation services would, in effect, be an ''incidental use,'' insofar as pertinent here. In our opinion such incidental use would not violate the provisions of the 1964 Act.

Number three:

''The grant of funds for mass public transportation purposes to a City which has expressed an intent to engage in the general charter bus business when such funds would in effect constitute a subsidy to the City of its intended charter bus operations; i.e. freeing Municipal funds with which to purchase charter bus equipment.''

Section 4(a) of the 1954 Act (49 U.S.C. 1603(a)) provides, in part, as follows:

''* * * The Administrator (now Secretary), on the basis of engineering studies, studies of economic feasibility, and data showing the nature and extent of expected utilization of the facilities and equipment, shall estimate what portion of the cost of a project to be assisted under section 1602 of this title cannot be reasonably financed from revenues—which portion shall hereinafter be called 'net project cost'. The Federal grant for such a project shall not exceed two-thirds of the net project cost. The remainder of the net project cost shall be provided, in cash, from sources other than Federal funds * * *.''

It is clear from the legislative history of the Act involved that the ''revenues'' to be considered are mass transportation system revenues including any revenues from incidental charter operations. There is nothing in the language of the Act which requires HUD to take into account the status of the general funds of an applicant city in determining how much capital grant assistance to extend to that city.

It should be noted that in a sense nearly every capital grant to a city constitutes a partial subsidy of every activity of the city which is supported by tax revenues, since it frees tax revenues for such other uses.

Number four:

''With specific reference to the application of the City of San Diego for funds under its application to the Department of Housing and Urban Development dated June 2, 1966, whether the Act permits a grant to purchase equipment wherein 25 percent of such equipment will be used either exclusively or substantially in the operation of charter bus services.''

As to the City of San Diego's grant application, we have been advised by HUD as follows:

''As explained above, the Act authorizes assistance only for facilities to be used in mass transportation service. We could not, therefore, assist San Diego in purchasing any equipment to be used 'exclusively' in the operation of charter bus service. Furthermore, as also explained above, assisted mass transportation equipment can be used only incidentally for such charter services.

''Whether equipment used 'substantially' in such service qualifies under this rule can be answered only in the light of the specifics of the San Diego situation. * * * we have already, during our preliminary review of the City's application, disallowed about $150,000 of the proposed project cost which was allocated to the purchase of eight charter-type buses.

''The final application of the City of San Diego is presently under active consideration by this Department. In particular, we have requested the City to furnish additional information as to the nature and extent of the proposed use, if any, of project facilities and equipment in charter service, so that we can further evaluate the application under the criteria above set forth. We have also requested similar information from Mr. Fredrick J. Ruane, who has filed a taxpayers' suit (Superior Court for San Diego County Civil #297329) against the City, contesting its authority to engage in charter bus operations.''

As indicated above, it is clear that under the Act in question grants may not legally be made to purchase buses to be used ''exclusively'' in the operation of charter bus

service. However, in view of the purposes of the Act involved it is our opinion that a city which has purchased with grant funds buses needed for an efficient mass transportation system, is not precluded by the act from using such buses for charter service during idle or off-peak periods when the buses are not needed for regularly scheduled runs. As indicated above, such a use would appear to be an incidental use.

The fourth question is answered accordingly.

As requested, the correspondence enclosed with your letter is returned herewith.

Sincerely yours,

FRANK H. WEITZEL,
Assistant Comptroller General of the United States.

Enclosures:
The Honorable Bob Wilson, House of Representatives.

MARCH 29, 1976.

INFLATIONARY IMPACT STATEMENT

FINAL REGULATIONS ON SCHOOL BUS OPERATIONS

I certify that, in accordance with Executive Order 11821, dated November 27, 1974, and Departmental implementing instructions, an Inflationary Impact Statement is not required for final regulations on School Bus Operations.

ROBERT E. PATRICELLI,
Federal Mass Transit Administrator.

PART 609—TRANSPORTATION FOR ELDERLY AND HANDICAPPED PERSONS

Sec.
609.1 Purpose.
609.3 Definitions.
609.5 Applicability.
609.23 Reduced fare.
APPENDIX A TO PART 609—ELDERLY AND HANDICAPPED

AUTHORITY: 49 U.S.C. 5307(d) and 5308(b); 23 U.S.C. 134, 135 and 142; 29 U.S.C. 794; 49 CFR 1.51.

SOURCE: 41 FR 18239, Apr. 30, 1976, unless otherwise noted.

§ 609.1 Purpose.

The purpose of this part is to establish formally the requirements of the Federal Transit Administration (FTA) on transportation for elderly and handicapped persons.

§ 609.3 Definitions.

As used herein:

Elderly and handicapped persons means those individuals who, by reason of illness, injury, age, congenital malfunction, or other permanent or temporary incapacity or disability, including those who are nonambulatory wheelchair-bound and those with semi-ambulatory capabilities, are unable without special facilities or special planning or design to utilize mass transportation facilities and services as effectively as persons who are not so affected.

§ 609.5 Applicability.

This part, which applies to projects approved by the Federal Transit Administrator on or after May 31, 1976, applies to all planning, capital, and operating assistance projects receiving Federal financial assistance under sections 5307 or 5308 of the Federal transit laws (49 U.S.C. Chapter 53), and non-highway public mass transportation projects receiving Federal financial assistance under: (1) Subsection (a) or (c) of section 142 of title 23, United States Code; and (2) paragraph (4) of subsection (e) of section 103, title 23, United States Code. However, under certain circumstances evident in §§ 609.13 through 609.21, the latter sections apply to fixed facilities and vehicles included in projects approved before May 31, 1976. Sections in this part on capital assistance applications, fixed facilities, and vehicles apply expressly to capital assistance projects receiving Federal financial assistance under any of the above statutes.

[41 FR 18239, Apr. 30, 1976, as amended at 61 FR 19562, May 2, 1996]

§ 609.23 Reduced fare.

Applicants for financial assistance under section 5307 of the Federal transit laws (49 U.S.C. Chapter 53), must, as a condition to receiving such assistance, give satisfactory assurances, in such manner and form as may be required by the Federal Transit Administrator and in accordance with such terms and conditions as the Federal Transit Administrator may prescribe, that the rates charged elderly and handicapped persons during non-peak

hours for transportation utilizing or involving the facilities and equipment of the project financed with assistance under this section will not exceed one-half of the rates generally applicable to other persons at peak hours, whether the operation of such facilities and equipment is by the applicant or is by another entity under lease or otherwise.

[41 FR 18239, Apr. 30, 1976, as amended at 61 FR 19562, May 2, 1996]

APPENDIX A TO PART 609—ELDERLY AND HANDICAPPED

The definitions of the term *elderly and handicapped* as applied under FTA's elderly and handicapped half-fare program (49 CFR part 609) shall apply to this rule. This permits a broader class of handicapped persons to take advantage of the exception than would be permitted under the more restrictive definition applied to the non-discrimination provisions of the Department's section 504 program (49 CFR 27.5), which includes only handicapped persons otherwise unable to use the recipient's bus service for the general public.

Accordingly, for the purposes of this part, the definition of *elderly persons* may be determined by the FTA recipient but must, at a minimum, include all persons 65 years of age or over.

Similarly, the definition of *handicapped persons* is derived from the existing regulations at 49 CFR 609.3 which provide that *Handicapped persons* means those individuals who, by reason of illness, injury, age, congenital malfunction, or other permanent or temporary incapacity or disability, including those who are nonambulatory wheelchair-bound and those with semi-ambulatory capabilities, are unable without special facilities or special planning or design to utilize mass transportation facilities and services as effectively as persons who are not so affected.

To assist in understanding how the definitions might be applied to administration of the charter rule, the following questions and answers previously published by FTA for the half-fare program in FTA C 9060.1, April 20, 1978, are reproduced:

1. *Question:* Can the definition of *elderly* or *handicapped* be restricted on the basis of residency, citizenship, income, employment status, or the ability to operate an automobile?

Answer: No. Section 5(m) is applicable to *elderly and handicapped persons*. It is FTA's policy that such categorical exceptions are not permitted under the Act.

2. *Question:* Can the eligibility of *temporary handicaps* be restricted on the basis of their duration?

Answer: Handicaps of less than 90 days duration may be excluded. Handicaps of more than 90 days duration must be included.

3. *Question:* Can the definition of *handicap* be limited in any way?

Answer: FTA has allowed applicants to exclude some conditions which appear to meet the functional definition of *handicap* provided in section 5302(a)(5) of the Federal transit laws (49 U.S.C. Chapter 53). These include pregnancy, obesity, drug or alcohol addiction, and certain conditions which do not fall under the statutory definition (e.g., loss of a finger, some chronic heart or lung conditions, controlled epilepsy, etc.). Individuals may also be excluded whose handicap involves a contagious disease or poses a danger to the individual or other passengers. Other exceptions should be reviewed on a case-by-case basis.

4. *Question:* Is blindness considered a handicap under Section 5(m)?

Answer: Yes.

5. *Question:* Is deafness considered a handicap under section 5(m)?

Answer: As a rule, no, because deafness, especially on buses, is not considered a disability which requires special planning, facilities, or design. However, deafness is recognized as a handicap in the Department of Transportation's ADA regulation, and applicants for Section 5 assistance are encouraged to include the deaf as eligible for off-peak half-fares.

6. *Question:* Is mental illness considered a handicap under section 5(m)?

Answer: As a rule, no, because of the difficulty in establishing criteria or guidelines for defining eligibility. However, FTA encourages applicants to provide the broadest possible coverage in defining eligible handicaps, including mental illness.

7. *Question:* Can operators delegate the responsibility for certifying individuals as eligible to other agencies?

Answer: Yes, provided that such agencies administer the certification of individuals in an acceptable manner and are reasonably accessible to the elderly and handicapped. Many operators currently make extensive use of social service agencies (both public and private) to identify and certify eligible individuals.

8. *Question:* Can operators require elderly and handicapped individuals to be recognized by any existing agency (e.g., require that handicapped persons be receiving Social Service or Veterans' Administration benefits)?

Answer: Recognition by such agencies is commonly used to certify eligible individuals. However, such recognition should not be a mandatory prerequisite for eligibility. For example, many persons with eligible

temporary handicaps may not be recognized as handicapped by social service agencies.

9. *Question:* Can the operator require that elderly and handicapped persons come to a central office to register for an off-peak half-fare program?

Answer: FTA strongly encourages operators to develop procedures which maximize the availability of off-peak half-fares to eligible individuals. Requiring individuals to travel to a single office which may be inconveniently located is not consistent with this policy, although it is not strictly prohibited. FTA reserves the right to review such local requirements on a case-by-case basis.

10. *Question:* Must ID cards issued by one operator be transferable to another?

Answer: No. However, FTA encourages consistency among off-peak procedures and the maximizing of availability to eligible individuals, especially among operators within a single urban area. Nevertheless, each operator is permitted to require its own certification of individuals using its service.

11. *Question:* Can an operator require an elderly or handicapped person to submit to a procedure certifying their eligibility before they can receive half-fare? For example, if an operator requires eligible individuals to have a special ID card, can the half-fare be denied to an individual who can otherwise give proof of age, etc, but does not have an ID card?

Answer: Yes, although FTA does not endorse this practice.

[53 FR 53356, Dec. 30, 1988. Redesignated and amended at 61 FR 19562, May 2, 1996]

PART 611—MAJOR CAPITAL INVESTMENT PROJECTS

Sec.
611.1 Purpose and contents.
611.3 Applicability.
611.5 Definitions.
611.7 Relation to planning and project development processes.
611.9 Project justification criteria for grants and loans for fixed guideway systems.
611.11 Local financial commitment criteria.
611.13 Overall project ratings.
APPENDIX A TO PART 611—DESCRIPTION OF MEASURES FOR PROJECT EVALUATION.

AUTHORITY: 49 U.S.C. 5309; 49 CFR 1.51

SOURCE: 65 FR 76880, Dec. 7, 2000, unless otherwise noted.

§611.1 Purpose and contents.

(a) This part prescribes the process that applicants must follow to be considered eligible for capital investment grants and loans for new fixed guideway systems or extensions to existing systems (''new starts''). Also, this part prescribes the procedures used by FTA to evaluate proposed new starts projects as required by 49 U.S.C. 5309(e), and the scheduling of project reviews required by 49 U.S.C. 5328(a).

(b) This part defines how the results of the evaluation described in paragraph (a) of this section will be used to:

(1) Approve entry into preliminary engineering and final design, as required by 49 U.S.C. 309(e)(6);

(2) Rate projects as ''highly recommended,'' ''recommended,'' or ''not recommended,'' as required by 49 U.S.C. 5309(e)(6);

(3) Assign individual ratings for each of the project justification criteria specified in 49 U.S.C. 5309(e)(1)(B) and (C);

(4) Determine project eligibility for Federal funding commitments, in the form of Full Funding Grant Agreements;

(5) Support funding recommendations for this program for the Administration's annual budget request; and

(6) Fulfill the reporting requirements under 49 U.S.C. 5309(o)(1), Funding Levels and Allocations of Funds, Annual Report, and 5309(o)(2), Supplemental Report on New Starts.

(c) The information collected and ratings developed under this part will form the basis for the annual reports to Congress, required by 49 U.S.C. 5309(o)(1) and (2).

§611.3 Applicability.

(a) This part applies to all proposals for Federal capital investment funds under 49 U.S.C. 5309 for new transit fixed guideway systems and extensions to existing systems.

(b) Projects described in paragraph (a) of this section are not subject to evaluation under this part if the total amount of funding from 49 U.S.C. 5309 will be less than $25 million, or if such projects are otherwise exempt from evaluation by statute.

(1) Exempt projects must still be rated by FTA for purposes of entering into a Federal funding commitment as

required by 49 U.S.C. 5309(e)(7). Sponsors who believe their projects to be exempt are nonetheless strongly encouraged to submit data for project evaluation as described in this part.

(2) Such projects are still subject to the requirements of 23 CFR part 450 and 23 CFR part 771.

(3) This part does not apply to projects for which a Full Funding Grant Agreement (FFGA) has already been executed.

(c) Consistent with 49 U.S.C. 5309(e)(8)(B), FTA will make project approval decisions on proposed projects using expedited procedures as appropriate, for proposed projects that are:

(1) Located in a nonattainment area;

(2) Transportation control measures as defined by the Clean Air Act (42 U.S.C. 7401 *et seq.*); and

(3) Required to carry out a State Implementation Plan.

§ 611.5 Definitions.

The definitions established by Titles 12 and 49 of the United States Code, the Council on Environmental Quality's regulation at 40 CFR parts 1500–1508, and FHWA–FTA regulations at 23 CFR parts 450 and 771 are applicable. In addition, the following definitions apply:

Alternatives analysis is a corridor level analysis which evaluates all reasonable mode and alignment alternatives for addressing a transportation problem, and results in the adoption of a locally preferred alternative by the appropriate State and local agencies and official boards through a public process.

Baseline alternative is the alternative against which the proposed new starts project is compared to develop project justification measures. Relative to the no build alternative, it should include transit improvements lower in cost than the new start which result in a better ratio of measures of transit mobility compared to cost than the no build alternative.

BRT means bus rapid transit.

Bus Rapid Transit refers to coordinated improvements in a transit system's infrastructure, equipment, operations, and technology that give preferential treatment to buses on fixed guideways and urban roadways. The intention of Bus Rapid Transit is to reduce bus travel time, improve service reliability, increase the convenience of users, and ultimately, increase bus ridership.

Extension to existing fixed-guideway system means a project to extend an existing fixed guideway system.

FFGA means a Full Funding Grant Agreement.

Final Design is the final phase of project development, and includes (but is not limited to) the preparation of final construction plans (including construction management plans), detailed specifications, construction cost estimates, and bid documents.

Fixed guideway system means a mass transportation facility which utilizes and occupies a separate right-of-way, or rail line, for the exclusive use of mass transportation and other high occupancy vehicles, or uses a fixed catenary system and a right of way usable by other forms of transportation. This includes, but is not limited to, rapid rail, light rail, commuter rail, automated guideway transit, people movers, ferry boat service, and fixed-guideway facilities for buses (such as bus rapid transit) and other high occupancy vehicles. A *new fixed guideway system* means a newly-constructed fixed guideway system in a corridor or alignment where no such system exists.

FTA means the Federal Transit Administration.

Full Funding Grant Agreement means an instrument that defines the scope of a project, the Federal financial contribution, and other terms and conditions.

Major transit investment means any project that involves the construction of a new fixed guideway system or extension of an existing fixed guideway system for use by mass transit vehicles.

NEPA process means those procedures necessary to meet the requirements of the National Environmental Policy Act of 1969, as amended (NEPA), at 23 CFR part 771; the NEPA process is completed when a Record of Decision (ROD) or Finding of No Significant Impact (FONSI) is issued.

New start means a new fixed guideway system, or an extension to an existing fixed guideway system.

Preliminary Engineering is the process by which the scope of the proposed project is finalized, estimates of project costs, benefits and impacts are refined, NEPA requirements are completed, project management plans and fleet management plans are further developed, and local funding commitments are put in place.

Secretary means the Secretary of Transportation.

TEA–21 means the Transportation Equity Act for the 21st Century.

§611.7 Relation to planning and project development processes.

All new start projects proposed for funding assistance under 49 USC 5309 must emerge from the metropolitan and Statewide planning process, consistent with 23 CFR part 450. To be eligible for FTA capital investment funding, a proposed project must be based on the results of alternatives analysis and preliminary engineering.

(a) *Alternatives Analysis.* (1) To be eligible for FTA capital investment funding for a major fixed guideway transit project, local project sponsors must perform an alternatives analysis.

(2) The alternatives analysis develops information on the benefits, costs, and impacts of alternative strategies to address a transportation problem in a given corridor, leading to the adoption of a locally preferred alternative.

(3) The alternative strategies evaluated in an alternatives analysis must include a no-build alternative, a baseline alternative, and an appropriate number of build alternatives. Where project sponsors believe the no-build alternative fulfills the requirements for a baseline alternative, FTA will determine whether to require a separate baseline alternative on a case-by-case basis.

(4) The locally preferred alternative must be selected from among the evaluated alternative strategies and formally adopted and included in the metropolitan planning organization's financially-constrained long-range regional transportation plan.

(b) *Preliminary Engineering.* Consistent with 49 USC 5309(e)(6) and 5328(a)(2), FTA will approve/disapprove entry of a proposed project into preliminary engineering within 30 days of receipt of a formal request from the project sponsor(s).

(1) A proposed project can be considered for advancement into preliminary engineering only if:

(i) Alternatives analysis has been completed

(ii) The proposed project is adopted as the locally preferred alternative by the Metropolitan Planning Organization into its financially constrained metropolitan transportation plan;

(iii) Project sponsors have demonstrated adequate technical capability to carry out preliminary engineering for the proposed project; and

(iv) All other applicable Federal and FTA program requirements have been met.

(2) FTA's approval will be based on the results of its evaluation as described in §§611.9–611.13.

(3) At a minimum, a proposed project must receive an overall rating of ''recommended'' to be approved for entry into preliminary engineering.

(4) This part does not in any way revoke prior FTA approvals to enter preliminary engineering made prior to February 5, 2001.

(5) Projects approved to advance into preliminary engineering receive blanket pre-award authority to incur project costs for preliminary engineering activities prior to grant approval.

(i) This pre-award authority does not constitute a commitment by FTA that future Federal funds will be approved for this project.

(ii) All Federal requirements must be met prior to incurring costs in order to retain eligibility of the costs for future FTA grant assistance.

(c) *Final Design.* Consistent with 49 USC 5309(e)(6) and 5328(a)(3), FTA will approve/disapprove entry of a proposed project into final design within 120 days of receipt of a formal request from the project sponsor(s).

(1) A proposed project can be considered for advancement into final design only if:

(i) The NEPA process has been completed;

(ii) Project sponsors have demonstrated adequate technical capability to carry out final design for the proposed project; and

(iii) All other applicable Federal and FTA program requirements have been met.

(2) FTA's approval will be based on the results of its evaluation as described in Parts §§611.9–611.13 of this Rule.

(3) At a minimum, a proposed project must receive an overall rating of ''recommended'' to be approved for entry into final design.

(4) Consistent with the Government Performance and Results Act of 1993, project sponsors seeking FFGAs shall submit a complete plan for collection and analysis of information to identify the impacts of the new start project and the accuracy of the forecasts prepared during development of the project.

(i) The plan shall provide for: Collection of ''before'' data on the current transit system; documentation of the ''predicted'' scope, service levels, capital costs, operating costs, and ridership of the project; collection of ''after'' data on the transit system two years after opening of the new start project; and analysis of the consistency of ''predicted'' project characteristics with the ''after'' data.

(ii) The ''before'' data collection shall obtain information on transit service levels and ridership patterns, including origins and destinations, access modes, trip purposes, and rider characteristics. The ''after'' data collection shall obtain analogous information on transit service levels and ridership patterns, plus information on the as-built scope and capital costs of the new start project.

(iii) The analysis of this information shall describe the impacts of the new start project on transit services and transit ridership, evaluate the consistency of ''predicted'' and actual project characteristics and performance, and identify sources of differences between ''predicted'' and actual outcomes.

(iv) For funding purposes, preparation of the plan for collection and analysis of data is an eligible part of the proposed project.

(5) Project sponsors shall collect data on the current system, according to the plan required under §611.7(c)(4) as approved by FTA, prior to the beginning of construction of the proposed new start. Collection of this data is an eligible part of the proposed project for funding purposes.

(6) This part does not in any way revoke prior FTA approvals to enter final design that were made prior to February 5, 2001.

(7) Projects approved to advance into final design receive blanket pre-award authority to incur project costs for final design activities prior to grant approval.

(i) This pre-award authority does not extend to right of way acquisition or construction, nor does it constitute a commitment by FTA that future Federal funds will be approved for this project.

(ii) All Federal requirements must be met prior to incurring costs in order to retain eligibility of the costs for future FTA grant assistance.

(d) *Full funding grant agreements.* (1) FTA will determine whether to execute an FFGA based on:

(i) The evaluations and ratings established by this rule;

(ii) The technical capability of project sponsors to complete the proposed new starts project; and

(iii) A determination by FTA that no outstanding issues exist that could interfere with successful implementation of the proposed new starts project.

(2) An FFGA shall not be executed for a project that is not authorized for final design and construction by Federal law.

(3) FFGAs will be executed only for those projects which:

(i) Are rated as ''recommended'' or ''highly recommended;''

(ii) Have completed the appropriate steps in the project development process;

(iii) Meet all applicable Federal and FTA program requirements; and

(iv) Are ready to utilize Federal new starts funds, consistent with available program authorization.

(4) In any instance in which FTA decides to provide financial assistance under section 5309 for construction of a new start project, FTA will negotiate an FFGA with the grantee during final design of that project. Pursuant to the terms and conditions of the FFGA:

(i) A maximum level of Federal financial contribution under the section 5309 new starts program will be fixed;

(ii) The grantee will be required to complete construction of the project, as defined, to the point of initiation of revenue operations, and to absorb any additional costs incurred or necessitated;

(iii) FTA and the grantee will establish a schedule for anticipating Federal contributions during the final design and construction period; and

(iv) Specific annual contributions under the FFGA will be subject to the availability of budget authority and the ability of the grantee to use the funds effectively.

(5) The total amount of Federal obligations under Full Funding Grant Agreements and potential obligations under Letters of Intent will not exceed the amount authorized for new starts under 49 U.S.C. §5309.

(6) FTA may also make a ''contingent commitment,'' which is subject to future congressional authorizations and appropriations, pursuant to 49 U.S.C. 5309(g), 5338(b), and 5338(h).

(7) Consistent with the Government Performance and Results Act of 1993 (GPRA), the FFGA will require implementation of the data collection plan prepared in accordance with §611.7(c)(4):

(i) Prior to the beginning of construction activities the grantee shall collect the ''before'' data on the existing system, if such data has not already been collected as part of final design, and document the predicted characteristics and performance of the project.

(ii) Two years after the project opens for revenue service, the grantee shall collect the ''after'' data on the transit system and the new start project, determine the impacts of the project, analyze the consistency of the ''predicted'' performance of the project with the ''after'' data, and report the findings and supporting data to FTA.

(iii) For funding purposes, collection of the ''before'' data, collection of the ''after'' data, and the development and reporting of findings are eligible parts of the proposed project.

(8) This part does not in any way alter, revoke, or require re-evaluation of existing FFGAs that were issued prior to February 5, 2001.

§611.9 Project justification criteria for grants and loans for fixed guideway systems.

In order to approve a grant or loan for a proposed new starts project under 49 U.S.C. 5309, and to approve entry into preliminary engineering and final design as required by section 5309(e)(6), FTA must find that the proposed project is justified as described in section 5309(e)(1)(B).

(a) To make the statutory evaluations and assign ratings for project justification, FTA will evaluate information developed locally through alternatives analyses and refined through preliminary engineering and final design.

(1) The method used to make this determination will be a multiple measure approach in which the merits of candidate projects will be evaluated in terms of each of the criteria specified by this section.

(2) The measures for these criteria are specified in Appendix A to this rule.

(3) The measures will be applied to the project as it has been proposed to FTA for new starts funding under 49 U.S.C. 5309.

(4) The ratings for each of the criteria will be expressed in terms of descriptive indicators, as follows: ''high,'' ''medium-high,'' ''medium,'' ''low-medium,'' or ''low.''

(b) The criteria are as follows:

(1) Mobility Improvements.

(2) Environmental Benefits.

(3) Operating Efficiencies.

(4) Transportation System User Benefits (Cost-Effectiveness).

(5) Existing land use, transit supportive land use policies, and future patterns.

(6) Other factors. Additional factors, including but not limited to:

(i) The degree to which the programs and policies (e.g., parking policies, etc.) are in place as assumed in the forecasts,

(ii) Project management capability, including the technical capability of the grant recipient to construct the project, and

(iii) Additional factors relevant to local and national priorities and relevant to the success of the project.

(c) In evaluating proposed new starts projects under these criteria:

(1) As a candidate project proceeds through preliminary engineering and final design, a greater degree of certainty is expected with respect to the scope of the project and a greater level of commitment is expected with respect to land use.

(2) For the criteria under § 611.9(b)(1)–(4), the proposed new start will be compared to the baseline alternative.

(d) In evaluating proposed new starts projects under these criteria, the following factors shall be considered:

(1) The direct and indirect costs of relevant alternatives;

(2) Factors such as congestion relief, improved mobility, air pollution, noise pollution, energy consumption, and all associated ancillary and mitigation costs necessary to carry out each alternative analyzed, and recognize reductions in local infrastructure costs achieved through compact land use development;

(3) Existing land use, mass transportation supportive land use policies, and future patterns;

(4) The degree to which the project increases the mobility of the mass transportation dependent population or promotes economic development;

(5) Population density and current transit ridership in the corridor;

(6) The technical capability of the grant recipient to construct the project;

(7) Differences in local land, construction, and operating costs; and

(8) Other factors as appropriate.

(e) FTA may amend the measures for these criteria, pending the results of ongoing studies regarding transit benefit evaluation methods.

(f) The individual ratings for each of the criteria described in this section will be combined into a summary rating of ''high,'' ''medium-high,'' ''medium,'' ''low-medium,'' or ''low'' for project justification. ''Other factors'' will be considered as appropriate.

§ 611.11 Local financial commitment criteria.

In order to approve a grant or loan under 49 U.S.C. 5309, FTA must find that the proposed project is supported by an acceptable degree of local financial commitment, as required by section 5309(e)(1)(C). The local financial commitment to a proposed project will be evaluated according to the following measures:

(a) The proposed share of project capital costs to be met using funds from sources other than the section 5309 new starts program, including both the non-Federal match required by Federal law and any additional capital funding (''overmatch''), and the degree to which planning and preliminary engineering activities have been carried out without funding from the section 5309 new starts program;

(b) The stability and reliability of the proposed capital financing plan for the new starts project; and

(c) The stability and reliability of the proposed operating financing plan to fund operation of the entire transit system as planned over a 20-year planning horizon.

(d) For each proposed project, ratings for paragraphs (b) and (c) of this section will be reported in terms of descriptive indicators, as follows: ''high,'' ''medium-high,'' ''medium,'' ''low-medium,'' or ''low.'' For paragraph (a) of this section, the percentage of Federal funding sought from 49 U.S.C. § 5309 will be reported.

(e) The summary ratings for each measure described in this section will be combined into a summary rating of ''high,'' ''medium-high,'' ''medium,'' ''low-medium,'' or ''low'' for local financial commitment.

§ 611.13 Overall project ratings.

(a) The summary ratings developed for project justification local financial commitment (§§ 611.9 and 611.11) will form the basis for the overall rating for each project.

(b) FTA will assign overall ratings of ''highly recommended,'' ''recommended,'' and ''not recommended,'' as required by 49 U.S.C. 5309(e)(6), to each proposed project.

(1) These ratings will indicate the overall merit of a proposed new starts project at the time of evaluation.

(2) Ratings for individual projects will be updated annually for purposes of the annual report on funding levels and allocations of funds required by section 5309(o)(1), and as required for FTA approvals to enter into preliminary engineering, final design, or FFGAs.

(c) These ratings will be used to:

(1) approve advancement of a proposed project into preliminary engineering and final design;

(2) Approve projects for FFGAs;

(3) Support annual funding recommendations to Congress in the annual report on funding levels and allocations of funds required by 49 U.S.C. 5309(o)(1); and

(4) For purposes of the supplemental report on new starts, as required under section 5309(o)(2).

(d) FTA will assign overall ratings for proposed new starts projects based on the following conditions:

(1) Projects will be rated as ''recommended'' if they receive a summary rating of at least ''medium'' for both project justification (§ 611.9) and local financial commitment (§ 611.11);

(2) Projects will be rated as ''highly recommended'' if they receive a summary rating higher than ''medium'' for both local financial commitment and project justification.

(3) Projects will be rated as ''not recommended'' if they do not receive a summary rating of at least ''medium'' for both project justification and local financial commitment.

APPENDIX A TO PART 611—DESCRIPTION OF MEASURES USED FOR PROJECT EVALUATION.

PROJECT JUSTIFICATION

FTA will use several measures to evaluate candidate new starts projects according to the criteria established by 49 U.S.C. 5309(e)(1)(B). These measures have been developed according to the considerations identified at 49 U.S.C. 5309(e)(3) (''Project Justification''), consistent with Executive Order 12893. From time to time, FTA has published technical guidance on the application of these measures, and the agency expects it will continue to do so. Moreover, FTA may well choose to amend these measures, pending the results of ongoing studies regarding transit benefit evaluation methods. The first four criteria listed below assess the benefits of a proposed new start project by comparing the project to the baseline alternative. Therefore, the baseline alternative must be defined so that comparisons with the new start project isolate the costs and benefits of the major transit investment. At a minimum, the baseline alternative must include in the project corridor all reasonable cost-effective transit improvements short of investment in the new start project. Depending on the circumstances and through prior agreement with FTA, the baseline alternative can be defined appropriately in one of three ways. First, where the adopted financially constrained regional transportation plan includes within the corridor all reasonable cost-effective transit improvements short of the new start project, a no-build alternative that includes those improvements may serve as the baseline. Second, where additional cost-effective transit improvements can be made beyond those provided by the adopted plan, the baseline will add those cost-effective transit improvements. Third, where the proposed new start project is part of a multimodal alternative that includes major highway components, the baseline alternative will be the preferred multimodal alternative without the new start project and associated transit services. Prior to submittal of a request to enter preliminary engineering for the new start project, grantees must obtain FTA approval of the definition of the baseline alternative. Consistent with the requirement that differences between the new start project and the baseline alternative measure only the benefits and costs of the project itself, planning factors external to the new start project and its supporting bus service must be the same for both the baseline and new start project alternatives. Consequently, the highway and transit networks defined for the analysis must be the same outside the corridor for which the new start project is proposed. Further, policies affecting travel demand and travel costs, such as land use, transit fares and parking costs, must be applied consistently to both the baseline alternative and the new start project alternative. The fifth criterion, ''existing land use, transit supportive land use policies, and future patterns,'' reflects the importance of transit-supportive local land use and related conditions and policies as an indicator of ultimate project success.

(a) Mobility Improvements.

(1) The aggregate travel time savings in the forecast year anticipated from the new start project compared to the baseline alternative. This measure sums the travel time savings accruing to travelers projected to use transit in the baseline alternative, travelers projected to shift to transit because of the new start project, and non-transit users

in the new start project who would benefit from reduced traffic congestion.

(i) After September 1, 2001, FTA will employ a revised measure of travel benefits accruing to travelers.

(ii) The revised measure will be based on a multi-modal measure of perceived travel times faced by all users of the transportation system.

(2) The absolute number of existing low income households located within ½-mile of boarding points associated with the proposed system increment.

(3) The absolute number of existing jobs within ½-mile of boarding points associated with the proposed system increment.

(b) Environmental Benefits.

(1) The forecast change in criteria pollutant emissions and in greenhouse gas emissions, ascribable to the proposed new investment, calculated in terms of annual tons for each criteria pollutant or gas (forecast year), compared to the baseline alternative;

(2) The forecast net change per year (forecast year) in the regional consumption of energy, ascribable to the proposed new investment, expressed in British Thermal Units (BTU), compared to the baseline alternative; and

(3) Current Environmental Protection Agency designations for the region's compliance with National Ambient Air Quality Standards.

(c) Operating Efficiencies. The forecast change in operating cost per passenger-mile (forecast year), for the entire transit system. The new start will be compared to the baseline alternative.

(d) Transportation System User Benefits (Cost-Effectiveness).

(1) The cost effectiveness of a proposed project shall be evaluated according to a measure of transportation system user benefits, based on a multimodal measure of perceived travel times faced by all users of the transportation system, for the forecast year, divided by the incremental cost of the proposed project. Incremental costs and benefits will be calculated as the differences between the proposed new start and the baseline alternative.

(2) Until the effective date of the transportation system user benefits measure of cost effectiveness, cost effectiveness will be computed as the incremental costs of the proposed project divided by its incremental transit ridership, as compared to the baseline alternative.

(i) Costs include the forecast annualized capital and annual operating costs of the entire transit system.

(ii) Ridership includes forecast total annual ridership on the entire transit system, excluding transfers.

(e) Existing land use, transit supportive land use policies, and future patterns. Existing land use, transit-supportive land use policies, and future patterns shall be rated by evaluating existing conditions in the corridor and the degree to which local land use policies are likely to foster transit supportive land use, measured in terms of the kinds of policies in place, and the commitment to these policies. The following factors will form the basis for this evaluation:

(1) Existing land use;

(2) Impact of proposed new starts project on land use;

(3) Growth-management policies;

(4) Transit-supportive corridor policies;

(5) Supportive zoning regulations near transit stations;

(6) Tools to implement land use policies;

(7) The performance of land use policies; and

(8) Existing and planned pedestrian facilities, including access for persons with disabilities.

(f) Other factors. Other factors that will be considered when evaluating projects for funding commitments include, but are not limited to:

(1) Multimodal emphasis of the locally preferred investment strategy, including the proposed new start as one element;

(2) Environmental justice considerations and equity issues,

(3) Opportunities for increased access to employment for low income persons, and Welfare-to-Work initiatives;

(4) Livable Communities initiatives and local economic activities;

(5) Consideration of alternative land use development scenarios in local evaluation and decision making for the locally preferred transit investment decision;

(6) Consideration of innovative financing, procurement, and construction techniques, including design-build turnkey applications; and

(7) Additional factors relevant to local and national priorities and to the success of the project, such as Empowerment Zones, Brownfields, and FTA's Bus Rapid Transit Demonstration Program.

LOCAL FINANCIAL COMMITMENT

FTA will use the following measures to evaluate the local financial commitment to a proposed project:

(a) The proposed share of project capital costs to be met using funds from sources other than the 49 U.S.C. 5309 new starts program, including both the local match required by Federal law and any additional capital funding (''overmatch''). Consideration will be given to:

(i) The use of innovative financing techniques, as described in the May 9, 1995, FEDERAL REGISTER notice on *FTA's Innovative Financing Initiative* (60 FR 24682);

(ii) The use of ''flexible funds'' as provided under the CMAQ and STP programs;

(iii) The degree to which alternatives analysis and preliminary engineering activities were carried out without funding from the §5309 new starts program; and

(iv) The actual percentage of the cost of recently-completed or simultaneously undertaken fixed guideway systems and extensions that are related to the proposed project under review, from sources other than the section 5309 new starts program (FTA's intent is to recognize that a region's local financial commitment to fixed guideway systems and extensions may not be limited to a single project).

(b) The stability and reliability of the proposed capital financing plan, according to:

(i) The stability, reliability, and level of commitment of each proposed source of local match, including inter-governmental grants, tax sources, and debt obligations, with an emphasis on availability within the project development timetable;

(ii) Whether adequate provisions have been made to cover unanticipated cost overruns and funding shortfalls; and

(iii) Whether adequate provisions have been made to fund the capital needs of the entire transit system as planned, including key station plans as required under 49 CFR 37.47 and 37.51, over a 20-year planning horizon period.

(c) The stability and reliability of the proposed operating financing plan to fund operation of the entire transit system as planned over a 20-year planning horizon.

PART 613—PLANNING ASSISTANCE AND STANDARDS

Subpart A—Metropolitan Transportation Planning and Programming

Sec.
613.100 Metropolitan transportation planning and programming.

Subpart B—Statewide Transportation Planning and Programming

613.200 Statewide transportation planning and programming.

Subpart C—Coordination of Federal and Federally Assisted Programs and Projects

613.300 Coordination of Federal and federally assisted programs and projects.

AUTHORITY: 23 U.S.C. 134, 135, and 217(g); 42 U.S.C. 3334, 4233, 4332, 7410 et seq; 49 U.S.C. 5303–5306, 5323(k); and 49 CFR 1.48(b), 1.51(f) and 21.7(a).

Subpart A—Metropolitan Transportation Planning and Programming

§613.100 Metropolitan transportation planning and programming.

The regulations in 23 CFR 450, subpart C, shall be followed in complying with the requirements of this subpart. The definitions in 23 CFR 450, subpart A, shall apply.

[72 FR 7285, Feb. 14, 2007]

Subpart B—Statewide Transportation Planning and Programming

§613.200 Statewide transportation planning and programming.

The regulations in 23 CFR 450, subpart B, shall be followed in complying with the requirements of this subpart. The definitions in 23 CFR 450, subpart A, shall apply.

[72 FR 7285, Feb. 14, 2007]

Subpart C—Coordination of Federal and Federally Assisted Programs and Projects

§613.300 Coordination of Federal and federally assisted programs and projects.

The coordination of Federal and federally assisted programs and projects implementing OMB revised Circular No. A–95, which are set forth in 23 CFR part 420, subpart C, are incorporated into this subpart.

[41 FR 33443, Aug. 9, 1976]

PART 614—TRANSPORTATION INFRASTRUCTURE MANAGEMENT

AUTHORITY: 23 U.S.C. 303; 49 U.S.C. 5303–5305; and 49 CFR 1.48 and 1.51.

SOURCE: 61 FR 67175, Dec. 19, 1996, unless otherwise noted.

§614.101 Cross-reference to management systems.

The regulations in 23 CFR Part 500, subparts A and B shall be followed in complying with the requirements of this part. Part 500, subparts A and B

implement 23 U.S.C. 303 for State development, establishment, and implementation of systems for managing traffic congestion (CMS), public transportation facilities and equipment (PTMS), intermodal transportation facilities and systems (IMS), and traffic monitoring for highways and public transportation facilities and equipment.

PART 622—ENVIRONMENTAL IMPACT AND RELATED PROCEDURES

Subpart A—Environmental Procedures

Sec.
622.101 Cross-reference to procedures.

Subpart B [Reserved]

Subpart C—Requirements for Energy Assessments

622.301 Buildings.

Subpart A—Environmental Procedures

AUTHORITY: 42 U.S.C. 4321 *et seq.*; 49 U.S.C. 303, 5301(a) and (e), 5323(b), and 5324; 23 U.S.C. 139 and 326; Pub. L. 109–59, 119 Stat. 1144, sections 6002 and 6010; 40 CFR parts 1500–1508; 49 CFR 1.51.

§ 622.101 Cross-reference to procedures.

The procedures for complying with the National Environmental Policy Act of 1969, as amended (42 U.S.C. 4321 *et seq.*), and related statutes, regulations, and orders are set forth in part 771 of title 23 of the Code of Federal Regulations. The procedures for complying with 49 U.S.C. 303, commonly known as ''Section 4(f),'' are set forth in part 774 of title 23 of the Code of Federal Regulations.

[73 FR 13401, Mar. 12, 2008]

Subpart B [Reserved]

Subpart C—Requirements for Energy Assessments

AUTHORITY: Sec. 403(b), Pub. L. 95–620; E.O. 12185.

§ 622.301 Buildings.

(a) FTA assistance for the construction, reconstruction, or modification of buildings for which applications are submitted to FTA after October 1, 1980, will be approved only after the completion of an energy assessment. An energy assessment shall consist of an analysis of the total energy requirements of a building, within the scope of the proposed construction activity and at a level of detail appropriate to that scope, which considers:

(1) Overall design of the facility or modification, and alternative designs;

(2) Materials and techniques used in construction or rehabilitation;

(3) Special or innovative conservation features that may be used;

(4) Fuel requirements for heating, cooling, and operations essential to the function of the structure, projected over the life of the facility and including projected costs of this fuel; and

(5) Kind of energy to be used, including:

(i) Consideration of opportunities for using fuels other than petroleum and natural gas, and

(ii) Consideration of using alternative, renewable energy sources.

(b) Compliance with the requirements of paragraph (a) of this section shall be documented as part of the Environmental Assessment or Environmental Impact Statement for projects which are subject to a requirement for one. Projects for which there is no environmental assessment or EIS shall document compliance by submission of appropriate material with the application for FTA assistance for actual construction.

(c) The cost of undertaking and documenting an energy assessment may be eligible for FTA participation if the requirements of Federal Management Circular 74–4 (A–87) are met.

(d) This requirement shall not apply to projects for which the final project application or environmental assessment have been submitted to FTA prior to October 1, 1980.

[45 FR 58038, Aug. 29, 1980]

PART 624—CLEAN FUELS GRANT PROGRAM

Sec.
624.1 Eligible applicant.
624.3 Eligible activities.
624.5 Application process.
624.7 Certification.
624.9 Grant requirements.
624.11 Reporting.

AUTHORITY: 49 U.S.C. 5308; 49 U.S.C. 5334(a); 49 CFR 1.51.

SOURCE: 67 FR 40104, June 11, 2002, unless otherwise noted.

§ 624.1 Eligible applicant.

(a) An eligible applicant is:

(1) A designated recipient (designated recipient has the same meaning as in 49 U.S.C. 5307(a)(2)); or

(2) A recipient for an urbanized area with a population of less than 200,000 (smaller urbanized area). The State in which the smaller urbanized area is located shall act as the recipient.

(b) An eligible applicant, as defined in paragraph (a) of this section, shall operate in an area that is either:

(1) An ozone or carbon monoxide nonattainment area as specified under section 107(d) of the Clean Air Act (42 U.S.C. 7407(d)); or

(2) A maintenance area for ozone or carbon monoxide.

[72 FR 15052, Mar. 30, 2007]

§ 624.3 Eligible activities.

(a) Eligible activities include purchasing or leasing clean fuel buses and constructing new or improving existing public transportation facilities to accommodate clean fuel buses.

(b) The term ''clean fuel vehicle'' means a vehicle that—

(1) Is powered by—

(i) Compressed natural gas;

(ii) Liquefied natural gas;

(iii) Biodiesel fuels;

(iv) Batteries;

(v) Alcohol-based fuels;

(vi) Hybrid electric;

(vii) Fuel cells;

(viii) Clean diesel, to the extent allowed under this section; or

(ix) Other low or zero emissions technology; and

(2) The Administrator of the Environmental Protection Agency has certified sufficiently reduces harmful emissions.

(c) Eligible projects are the following:

(1) Purchasing or leasing clean fuel buses, including buses that employ a lightweight composite primary structure, and vans for use in revenue service. The purchase or lease of non-revenue vehicles is not an eligible project.

(2) Constructing or leasing clean fuel bus facilities or electrical recharging facilities and related equipment. Facilities and related equipment for clean diesel buses are not eligible.

(3) At the discretion of the Administrator, projects relating to clean fuel, biodiesel, hybrid electric, or zero emissions technology buses that exhibit equivalent or superior emissions reductions to existing clean fuel or hybrid electric technologies.

(4) The Federal share for eligible activities undertaken for the purpose of complying with or maintaining compliance with the Clean Air Act under this program shall be limited to 90 percent of the net (incremental) cost of the activity.

(i) The Administrator may exercise discretion and determine the percentage of the Federal share for eligible activities to be less than 90 percent.

(ii) An administrative determination per this subsection will be published in accordance with § 624.5(a).

(5) Funding for clean diesel buses shall be limited to not more than 25 percent of the amount made available each fiscal year to carry out the program.

(6) Any amount made available for this section shall remain available to an eligible activity for two years after the fiscal year for which the amount is provided. Any amount that remains unobligated at the end of the three-year-period shall be added to the amount made available to carry out the program in the following fiscal year.

[67 FR 40104, June 11, 2002, as amended at 72 FR 15053, Mar. 30, 2007]

§ 624.5 Application process.

(a) FTA shall publish a Notice of Funding Availability in the FEDERAL REGISTER each fiscal year that funding is made available for the Clean Fuels program. The notice shall provide the criteria by which the eligible projects

will be evaluated for selection and the Administrator's determination of the net Federal share for projects funded under this Part.

(b) The Administrator shall determine the criteria for selecting proposed projects for funding, which may include, but are not limited to the following factors:

(1) Whether the proposed project is a transportation control measure in an approved State Implementation Plan;

(2) The benefits of the proposed project in reducing transportation-related pollutants;

(3) Consistency with the recipient's fleet management plan;

(4) The applicant's ability to implement the project and facilities to maintain and fuel the proposed vehicles;

(5) The applicant's coordination of the proposed project with other public transportation entities or other related projects within the applicant's Metropolitan Planning Organization or the geographic region within which the proposed project will operate.

(6) The proposed project's ability to support emerging clean fuels technologies or advanced technologies for transit buses.

[72 FR 15053, Mar. 30, 2007]

§ 624.7 Certification.

The applicant must use the certification contained in the Annual Notice of Assurances and Certifications published in the FEDERAL REGISTER each October.

§ 624.9 Grant requirements.

A grant under this section shall be subject to the following requirements of 49 U.S.C. 5307(d):

(a) *General.* All recipients shall maintain and report financial and operating information on an annual basis, as prescribed in 49 CFR part 630, and the most recent National Transit Database Reporting Manual.

(b) *Labor standards.* As a condition of financial assistance under 49 U.S.C. 5308, the interests of employees affected by the assistance shall be protected under arrangements that the Secretary of Labor concludes are fair and equitable.

(c) *Satisfactory continuing control.* An FTA grantee shall:

(1) Maintain control over federally funded property;

(i) Ensure that it is used in transit service; and

(ii) Dispose of it in accordance with Federal requirements.

(2) Under this paragraph (c), if the grantee leases federally funded property to another party, the lease must provide the grantee satisfactory continuing control over the use of that property as determined in two areas: real property (land) and facilities; and personal property (equipment and rolling stock, both revenue and non-revenue).

(d) *Maintenance.* The grant applicant shall certify annually that pursuant to 49 U.S.C. 5307(d)(1)(C), it will maintain (federally funded) facilities and equipment. In addition, the grantee shall keep equipment and facilities acquired with Federal assistance in good operating order, which includes maintenance of rolling stock (revenue and non-revenue), machinery and equipment, and facilities.

(e) *Rates charged elderly and persons with disabilities during nonpeak hours.* In accordance with 49 U.S.C. 5307(d)(1)(D), the grant applicant shall certify that the rates charged the elderly and persons with disabilities during nonpeak hours for fixed-route transportation using facilities and equipment financed with Federal assistance from FTA will not exceed one-half of the rates generally applicable to other persons at peak hours, whether the operation is by the applicant or by another entity under lease or otherwise.

(f) *Use of competitive procurements.* Pursuant to 49 U.S.C. 5307(d)(1)(E), the grant applicant shall certify that it will use competitive procurements and will not use procurements employing exclusionary or discriminatory specifications.

(g) *Compliance with Buy America provisions.* The grant applicant shall certify that in carrying out a procurement authorized for this program, the applicant will comply with applicable Buy America laws.

(h) *Certification that local funds are available for the project.* The grant applicant shall certify that the local

funds are or will be available to carry out the project.

(i) *Compliance with national policy concerning elderly persons and individuals with disabilities*. The grant applicant shall certify that it will comply with the requirements of 49 U.S.C. 5301(d) concerning the rights of elderly persons and persons with disabilities.

(j) *FTA Master Agreement*. The grant applicant shall comply with applicable provisions of the FTA Master Agreement which is incorporated by reference in the grant agreement.

[72 FR 15053, Mar. 30, 2007]

§ 624.11 Reporting.

(a) Recipients of financial assistance under 49 U.S.C. 5308 who purchase or lease hybrid electric, battery electric and fuel cell vehicles shall report semi-annually the following information to the appropriate FTA Regional Office for the first three years of the useful life of the vehicle:

(1) Vehicle miles traveled;

(2) Fuel/energy costs;

(3) Vehicle fuel/energy consumption and oil consumption;

(4) Number of road calls or breakdowns resulting from clean fuel and advanced propulsion technology systems, and

(5) Maintenance costs associated with the clean fuels or advanced propulsion system.

(b) Recipients of financial assistance under 49 U.S.C. 5308 who purchase or lease compressed natural gas (CNG), liquefied natural gas (LNG), and liquefied petroleum gas (LPG) vehicles may report the information described in paragraph (a) of this section, but this reporting is voluntary.

(c) Recipients of financial assistance under 49 U.S.C. 5308 that purchase or lease clean diesel vehicles are not required to report information beyond FTA grant reporting requirements for capital projects.

[67 FR 40104, June 11, 2002, as amended at 72 FR 15053, Mar. 30, 2007]

PART 630—NATIONAL TRANSIT DATABASE

Subpart A—General

Sec.

630.1 Purpose.
630.2 Scope.
630.3 Definitions.
630.4 Requirements.
630.5 Failure to report data.
630.6 Late and incomplete reports.
630.7 Failure to respond to questions.
630.8 Questionable data items.
630.9 Notice of FTA action.
630.10 Waiver of reporting requirements.
630.11 Data adjustments.

AUTHORITY: 49 U.S.C. 5307, 5311, 5335, and 49 CFR 1.51.

SOURCE: 72 FR 68761, Dec. 6, 2007, unless otherwise noted.

§ 630.1 Purpose.

The purpose of this part is to prescribe requirements and procedures necessary for compliance with the National Transit Database Reporting System and Uniform System of Accounts, as mandated by 49 U.S.C. 5335, and to set forth the procedures for addressing a reporting entity's failure to comply with these requirements.

§ 630.2 Scope.

This part applies to all applicants for, and any person that receives benefits directly from, a grant under 49 U.S.C. 5307 or 5311.

§ 630.3 Definitions.

(a) Except as otherwise provided, terms defined in 49 U.S.C. 5302 *et seq*. apply to this part.

(b) Except as otherwise provided, terms defined in the current editions of the National Transit Database Reporting Manuals and the NTD Uniform System of Accounts are used in this part as so defined.

(c) For purposes of this part:

Administrator means the Federal Transit Administrator or the Administrator's designee.

Applicant means an applicant for assistance under 49 U.S.C. 5307 or 5311.

Assistance means Federal financial assistance for the planning, acquisition, construction, or operation of public transportation services.

Beneficiary means any entity that receives benefits from assistance under 49 U.S.C. 5307 or 5311.

Current edition of the National Transit Database Reporting Manuals and Uniform System of Accounts means the most recently issued editions of the reference documents.

Days mean calendar days.

Reference Document(s) means the current editions of the National Transit Database Reporting Manuals and Uniform System of Accounts. These documents are subject to periodic revision. Beneficiaries and applicants are responsible for using the current editions of the reference documents.

Reporting entity means a transit agency, a State Department of Transportation that is a recipient of grants under 49 U.S.C. 5311, or a Federally-recognized Indian Tribe that is a direct recipient of grants under 49 U.S.C. 5311.

State Department of Transportation means the Department of Transportation of a State of the United States, the District of Columbia, Puerto Rico, the Northern Mariana Islands, Guam, American Samoa, or the U.S. Virgin Islands.

Transit agency means an entity providing public transportation as defined in 49 U.S.C. 5302.

§ 630.4 Requirements.

(a) *National Transit Database Reporting System.* Each applicant for and beneficiary of Federal financial assistance under 49 U.S.C. 5307 or 5311 must comply with the applicable requirements of 49 U.S.C. 5335, as set forth in the reference documents. State Departments of Transportation shall provide reports on behalf of their subrecipients of grants under 49 U.S.C. 5311 as specified in the reference documents. Transit agencies that are beneficiaries of grants under both 49 U.S.C. 5307 and 5311 must file an individual report as an urbanized area transit agency. Federally-recognized Indian Tribes that are direct beneficiaries of grants under 49 U.S.C. 5311 must file an individual report. State Departments of Transportation should not report on behalf of transit agencies that have filed individual reports as urbanized area transit agencies nor on behalf of Indian Tribes that are required to file an individual report.

(b) *Copies.* Copies of reference documents are available from the National Transit Database Web site located at *http://www.ntdprogram.gov*. These reference documents are subject to periodic revision. Revisions of reference documents will be posted on the National Transit Database Web site and a notice of any significant changes to the reporting requirements specified in these reference documents will be published in the FEDERAL REGISTER.

§ 630.5 Failure to report data.

Failure to report data in accordance with this part will result in the noncompliant reporting entity being ineligible to receive any Section 5307 or 5311 grants directly or indirectly until such time as a report is filed in accordance with this part.

§ 630.6 Late and incomplete reports.

(a) *Late reports.* Each reporting entity shall ensure that FTA receives its report by the due dates prescribed in the reference documents. A reporting entity may request a 30 day extension to submit its report. FTA will treat a failure to submit the required report by the due date or the extension date as failure to report data under § 630.5.

(b) *Incomplete reports.* FTA will treat an NTD submission that does not contain all of the required data; or does not contain the required certifications, where applicable; or that is not in substantial conformance with the definitions, procedures, and format requirements set out in the reference documents as a failure to report data under § 630.5, unless the reporting entity has exhausted all possibilities for obtaining this information.

§ 630.7 Failure to respond to questions.

FTA will review each NTD submission to verify the reasonableness of the data submitted. If any of the data do not appear reasonable, FTA will notify the reporting entity of this fact in writing, and request written justification from the reporting entity to either document the accuracy of the questioned data, or to revise the questioned data with a more accurate submission. Failure of a reporting entity to make a

good-faith written response to this request will be treated as a failure to report data under § 630.5.

§ 630.8 Questionable data items.

FTA may enter a zero, or adjust any questionable data item(s), in any reporting entity's NTD submission that is used in computing the Section 5307 apportionment. These adjustments may be made if any data appears to be inaccurate, have not been collected and reported in accordance with FTA reference documents, or if there is not adequate documentation and a reliable recordkeeping system.

§ 630.9 Notice of FTA action.

Before taking final action under §§ 630.5 or 630.8, FTA will transmit a written request to the reporting entity to provide the necessary information within a specified reasonable period of time. FTA will advise the reporting entity of its final decision.

§ 630.10 Waiver of reporting requirements.

Waivers of one or more sections of the reporting requirements may be granted at the discretion of the Administrator on a written showing that the party seeking the waiver cannot furnish the required data without unreasonable expense and inconvenience. Each waiver will be for a specified period of time.

§ 630.11 Data adjustments.

Errors in the data used in making the Section 5307 apportionment may be discovered after any particular year's apportionment is completed. If so, FTA shall make adjustments to correct these errors in a subsequent year's apportionment to the extent feasible.

PART 633—PROJECT MANAGEMENT OVERSIGHT

Subpart A—General Provisions

Sec.
633.1 Purpose.
633.3 Scope.
633.5 Definitions.

Subpart B—Project Management Oversight Services

633.11 Covered projects.
633.13 Initiation of PMO services.
633.15 Access to information.
633.17 PMO contractor eligibility.
633.19 Financing the PMO program.

Subpart C—Project Management Plans

633.21 Basic requirement.
633.23 FTA review of PMP.
633.25 Contents of a project management plan.
633.27 Implementation of a project management plan.
633.29 PMP waivers.

AUTHORITY: 49 U.S.C. 1601 et. seq., 1619.

SOURCE: 54 FR 36711, Sept. 1, 1989, unless otherwise noted.

Subpart A—General Provisions

§ 633.1 Purpose.

This part implements section 324 of the Surface Transportation and Uniform Relocation Assistance Act of 1987 (Pub. L. 100–17), which added section 23 to the FT Act. The part provides for a two-part program for major capital projects receiving assistance from the agency. First, subpart B discusses project management oversight, designed primarily to aid FTA in its role of ensuring successful implementation of federally-funded projects. Second, subpart C discusses the project management plan (PMP) required of all major capital projects. The PMP is designed to enhance the recipient's planning and implementation efforts and to assist FTA's grant application analysis efforts.

§ 633.3 Scope.

This rule applies to a recipient of Federal financial assistance undertaking a major capital project using funds made available under:

(a) Sections 3, 9, or 18 of the Federal Mass Transit Act of 1964, as amended;

(b) 23 U.S.C. 103(e)(4); or

(c) Section 14(b) of the National Capital Transportation Amendments of 1979 (93 Stat. 1320, Pub. L. 96–184).

§ 633.5 Definitions.

As used in this part:

Administrator means the Administrator of the Federal Transit Administration or the Administrator's designee.

Days means calendar days.

Fixed guideway means any public transportation facility which utilizes and occupies a separate right-of-way or rails. This includes, but is not limited to, rapid rail, light rail, commuter rail, automated guideway transit, people movers, and exclusive facilities for buses and other high occupancy vehicles.

Full funding agreement means a written agreement between FTA and a recipient that establishes a financial ceiling with respect to the Government's participation in a project; sets forth the scope of a project; and sets forth the mutual understanding, terms, and conditions relating to the construction and management of a project.

Major capital project means a project that:

(1) Involves the construction of a new fixed guideway or extension of an existing fixed guideway;

(2) Involves the rehabilitation or modernization of an existing fixed guideway with a total project cost in excess of $100 million; or

(3) The Administrator determines is a major capital project because the project management oversight program will benefit specifically the agency or the recipient. Typically, this means a project that:

(i) Generally is expected to have a total project cost in excess of $100 million or more to construct;

(ii) Is not exclusively for the routine acquisition, maintenance, or rehabilitation of vehicles or other rolling stock;

(iii) Involves new technology;

(iv) Is of a unique nature for the recipient; or

(v) Involves a recipient whose past experience indicates to the agency the appropriateness of the extension of this program.

Project management oversight means the monitoring of a major capital project's progress to determine whether a project is on time, within budget, in conformance with design criteria, constructed to approved plans and specifications and is efficiently and effectively implemented.

Project management plan means a written document prepared by a recipient that explicitly defines all tasks necessary to implement a major capital project.

Recipient means a direct recipient of Federal financial assistance from FTA.

FT Act means the Federal Mass Transit Act of 1964, as amended.

FTA means the Federal Transit Administration.

Subpart B—Project Management Oversight Services

§ 633.11 Covered projects.

The Administrator may contract for project management oversight services when the following two conditions apply:

(a) The recipient is using funds made available under section 3, 9, or 18 of the Federal Mass Transit Act of 1964, as amended; 23 U.S.C. 103(e)(4); or section 14(b) of the National Capital Transportation Amendments of 1979; and

(b) The project is a ''major capital project''.

§ 633.13 Initiation of PMO services.

PMO services will be initiated as soon as it is practicable, once the agency determines this part applies. In most cases, this means that PMO will begin during the preliminary engineering phase of the project. However, consistent with other provisions in this part, the Administrator may determine that a project is a ''major capital project'' at any point during its implementation. Should this occur, PMO will begin as soon as practicable after this agency determination.

§ 633.15 Access to information.

A recipient of FTA funds for a major capital project shall provide the Administrator and the PMO contractor chosen under this part access to its records and construction sites, as reasonably may be required.

§ 633.17 PMO contractor eligibility.

(a) Any person or entity may provide project management oversight services

in connection with a major capital project, with the following exceptions:

(1) An entity may not provide PMO services for its own project; and

(2) An entity may not provide PMO services for a project if there exists a conflict of interest.

(b) In choosing private sector persons or entities to provide project management oversight services, FTA uses the procurement requirements in the government-wide procurement regulations, found at 48 CFR CH I.

§ 633.19 Financing the PMO program.

(a) FTA is authorized to expend up to ½ of 1 percent of the funds made available each fiscal year under sections 3, 9, or 18 of the FT Act, 23 U.S.C. 103(e)(4), or section 14(b) of the National Capital Transportation Amendments of 1979 (93 Stat. 1320) to contract with any person or entity to provide a project management oversight service in connection with a major capital project as defined in this part.

(b) A contract entered into between FTA and a person or entity for project management oversight services under this part will provide for the payment by FTA of 100 percent of the cost of carrying out the contract.

Subpart C—Project Management Plans

§ 633.21 Basic requirement.

(a) If a project meets the definition of major capital project, the recipient shall submit a project management plan prepared in accordance with § 633.25 of this part, as a condition of Federal financial assistance. As a general rule, the PMP must be submitted during the grant review process and is part of FTA's grant application review. This section applies if:

(1) The project fails under one of the automatic major capital investment project categories (§ 633.5(1) or (2) of this part); or

(2) FTA makes a determination that a project is a major capital project, consistent with the definition of major capital project in § 633.5. This determination normally will be made during the grant review process. However, FTA may make such determination after grant approval.

(b)(1) FTA will notify the recipient when it must submit the PMP. Normally, FTA will notify the recipient sometime during the grant review process. If FTA determines the project is major under its discretionary authority after the grant has been approved, FTA will inform the recipient of its determination as soon as possible.

(2) Once FTA has notified the recipient that it must submit a plan, the recipient will have a minimum of 90 days to submit the plan.

§ 633.23 FTA review of PMP.

Within 60 days of receipt of a project management plan, the Administrator will notify the recipient that:

(a) The plan is approved;

(b) The plan is disapproved, including the reasons for the disapproval;

(c) The plan will require modification, as specified, before approval; or

(d) The Administrator has not yet completed review of the plan, and state when it will be reviewed.

§ 633.25 Contents of a project management plan.

At a minimum, a recipient's project management plan shall include—

(a) A description of adequate recipient staff organization, complete with well-defined reporting relationships, statements of functional responsibilities, job descriptions, and job qualifications;

(b) A budget covering the project management organization, appropriate consultants, property acquisition, utility relocation, systems demonstration staff, audits, and such miscellaneous costs as the recipient may be prepared to justify;

(c) A construction schedule;

(d) A document control procedure and recordkeeping system;

(e) A change order procedure which includes a documented, systematic approach to the handling of construction change orders;

(f) A description of organizational structures, management skills, and staffing levels required throughout the construction phase;

(g) Quality control and quality assurance programs which define functions, procedures, and responsibilities for

construction and for system installation and integration of system components;

(h) Material testing policies and procedures;

(i) Plan for internal reporting requirements including cost and schedule control procedures; and

(j) Criteria and procedures to be used for testing the operational system or its major components;

§ 633.27 Implementation of a project management plan.

(a) Upon approval of a project management plan by the Administrator the recipient shall begin implementing the plan.

(b) If a recipient must modify an approved project management plan, the recipient shall submit the proposed changes to the Administrator along with an explanation of the need for the changes.

(c) A recipient shall submit periodic updates of the project management plan to the Administrator. Such updates shall include, but not be limited to:

(1) Project budget;

(2) Project schedule;

(3) Financing, both capital and operating;

(4) Ridership estimates, including operating plan; and

(5) Where applicable, the status of local efforts to enhance ridership when estimates are contingent, in part, upon the success of such efforts.

(d) A recipient shall submit current data on a major capital project's budget and schedule to the Administrator on a monthly basis.

§ 633.29 PMP waivers.

A waiver will be considered upon initiation by the grantee or by the agency itself. The Administrator may, on a case-by-case basis, waive:

(a) Any of the PMP elements in § 633.25 of this part if the Administrator determines the element is not necessary for a particular plan; or

(b) The requirement of having a new project management plan submitted for a major capital project if a recipient seeks to manage the major capital project under a previously-approved project management plan.

PART 639—CAPITAL LEASES

Subpart A—General

Sec.
639.1 General overview of this part.
639.3 Purpose of this part.
639.5 Scope of this part.
639.7 Definitions.

Subpart B—Requirements

639.11 Lease qualification requirements.
639.13 Eligible types of leases.
639.15 Eligible forms of grant.
639.17 Eligible lease costs.
639.19 Other Federal requirements.

Subpart C—Cost-Effectiveness

639.21 Determination of cost-effectiveness.
639.23 Calculation of purchase or construction cost.
639.25 Calculation of lease cost.
639.27 Minimum criteria.

Subpart D—Lease Management

639.31 Early lease termination or modification.
639.33 Management of leased assets.

AUTHORITY: 49 U.S.C. 5302; 49 CFR 1.51.

SOURCE: 56 FR 51794, Oct. 15, 1991, unless otherwise noted.

Subpart A—General

§ 639.1 General overview of this part.

This part contains the requirements to qualify for capital assistance when leasing facilities or equipment under the Federal transit laws. This part is set out in four subparts, with subpart A containing general information on scope and definitions. Subpart B contains the principal requirements of this part, including eligibility requirements, the self-certification system used, and identification of the various forms of leases and grants that are eligible under the program. Subpart B also contains a section on other Federal requirements that may apply. Subpart C includes the actual calculations that each recipient should undertake before certifying that a lease is cost-effective. Finally, subpart D contains requirements on early lease termination and project management in general.

[63 FR 68366, Dec. 10, 1998]

§ 639.3 Purpose of this part.

This rule implements section 3003 of the Transportation Equity Act for the 21st Century (Pub. L. 105–178). Section 3003 amended section 5302 of Chapter 53 of Title 49 of the United States Code to allow a recipient to use capital funds to finance the leasing of facilities and equipment on the condition that the leasing arrangements are more cost effective than purchase or construction.

[63 FR 68367, Dec. 10, 1998]

§ 639.5 Scope of this part.

This part applies to all requests for capital assistance under Chapter 53 of Title 49 of the United States Code where the proposed method of obtaining a capital asset is by lease rather than purchase or construction.

[63 FR 68367, Dec. 10, 1998]

§ 639.7 Definitions.

In this part:

Applicant is included in the term ''recipient''.

Capital asset means facilities or equipment with a useful life of at least one year, which are eligible for capital assistance.

Capital assistance means Federal financial assistance for capital projects under section 9 of the FT Act.

Capital lease means any transaction whereby the recipient acquires the right to use a capital asset without obtaining full ownership regardless of the tax status of the transaction.

Equipment means non-expendable personal property.

Facilities means real property, including land, improvements and fixtures.

Interest rate means the most advantageous interest rate actually available to the recipient in the market.

Present value means the value at the time of calculation of a future payment, or series of future payments discounted by the time value of money as represented by an interest rate or similar cost of funds.

Recipient means an entity that receives Federal financial assistance from FTA, including an entity that receives Federal financial assistance from FTA through a State or other public body. In this part, a recipient includes an applicant for Federal financial assistance.

FT Act means the Federal Mass Transit Act of 1964, as amended, 49 U.S.C. 1601 *et seq*.

FTA means the Federal Transit Administration.

Subpart B—Requirements

§ 639.11 Lease qualification requirements.

(a) A lease may qualify for capital assistance if it meets the following criteria:

(1) The capital asset to be acquired by lease is otherwise eligible for capital assistance;

(2) There is or will be no existing Federal interest in the capital asset as of the date the lease will take effect unless as determined pursuant to § 639.13(b); and

(3) Lease of the capital asset is more cost-effective than purchase or construction of the asset, as determined under subpart C of this part.

(b) Once a lease has been qualified for capital assistance, it need not be requalified absent an affirmative act or omission by the recipient that vitiates the cost-effectiveness determination.

§ 639.13 Eligible types of leases.

(a) *General*. Any leasing arrangement, the terms of which provide for the recipient's use of a capital asset, potentially is eligible as a capital project under Chapter 53 of Title 49 of the United States Code, regardless of the classification of the leasing arrangement for tax purposes.

(b) *Special circumstances*. A recipient may request FTA to determine the eligibility of a certain financial arrangement if the recipient believes it might not meet the requirements of this part.

(c) *Lump sum lease*. A recipient that wishes to enter into a lease which requires the draw down of a single lump sum payment at the inception of the lease (or payments in advance of the incurrence of costs) rather than periodic payments during the life of the lease must notify FTA prior to execution of the lease concerning how it will ensure satisfactory continuing control of the asset for the duration of the lease. FTA has the right to disapprove

any arrangements where it has not been demonstrated that the recipient will have control over the asset. FTA may require the recipient to submit its cost-effectiveness comparison for review.

(d) *Pre-existing lease.* A lease entered into before grant approval, or before November 14, 1991 may be eligible for capital assistance for costs incurred after approval of such a lease by FTA under this part, if

(1) The lease is otherwise eligible under this part;

(2) The recipient can demonstrate that the lease, when entered into, was more cost effective than purchase or construction; and

(3) The procurement of the asset by lease was in accordance with Federal requirements that applied at the time the procurement tool place.

[56 FR 51794, Oct. 15, 1991, as amended at 63 FR 68367, Dec. 10, 1998]

§ 639.15 Eligible forms of grant.

A recipient may choose to receive capital assistance for a capital lease approved under this part—

(a) In a single grant under which lease payments may be drawn down periodically for the life of the lease; or

(b) In increments that are obligated by FTA periodically (usually in annual section 9 grants). In this case, a recipient—

(1) Must certify to FTA that it has the financial capacity to meet its future obligations under the lease in the event Federal funds are not available for capital assistance in subsequent years; and

(2) May incur costs under its lease before FTA's obligation of future increments of funding for such a lease. These costs are reimbursable in future grants, so long as the terms of the lease do not substantially change.

§ 639.17 Eligible lease costs.

(a) All costs directly attributable to making a capital asset available to the lessee are eligible for capital assistance, including, but not limited to—

(1) Finance charges, including interest;

(2) Ancillary costs such as delivery and installation charges; and

(3) Maintenance costs.

(b) Any asset leased under this part must be eligible for capital assistance under a traditional purchase or construction grant.

[61 FR 25090, May 17, 1996]

§ 639.19 Other Federal requirements.

(a) A recipient of capital assistance for a capital lease is subject to the same statutory and administrative requirements as a recipient who purchases or constructs a capital asset.

(b) A lessor of a capital lease is subject to the same statutory and administrative requirements as a direct seller of the same capital asset would be when the lessor—

(1) Purchases or constructs a capital asset in contemplation of leasing it to a recipient; or

(2) Modifies an existing capital asset in contemplation of leasing it to a recipient.

Subpart C—Cost-Effectiveness

§ 639.21 Determination of cost-effectiveness.

(a) To qualify a lease for capital assistance, a recipient must—

(1) Make a written comparison of the cost of leasing the asset with the cost of purchasing or constructing it; and

(2) Certify to FTA before entering into the lease or before receiving a capital grant for the asset, whichever is later, that obtaining the asset by lease is more cost-effective than purchase or construction of such asset.

(b) For purposes of this part, obtaining the asset by lease is more cost-effective than purchase or construction when the lease cost calculated under § 639.25 of this part is less than the purchase cost calculated under § 639.23 of this part.

(c) If a recipient is unable to perform the prescribed cost-effectiveness comparison as described in this subpart, it may ask FTA to approve an alternate form of cost-effectiveness evaluation.

§ 639.23 Calculation of purchase or construction cost.

(a) For purposes of this subpart, the purchase or construction cost of a capital asset is—

(1) The estimated cost to purchase or construct the asset; plus

(2) Ancillary costs such as delivery and installation; plus

(3) The net present value of the estimated future cost to provide any other service or benefit requested by the applicant in its proposal to obtain the capital asset.

(b) The estimated cost to purchase or construct must be—

(1) Reasonable;

(2) Based on realistic current market conditions; and

(3) Based on the expected useful life of the asset in mass transportation service, as indicated in paragraph (c) of this section.

(c) For purposes of this part, the expected useful life of a revenue vehicle is the useful life which is established by FTA for recipients of Federal assistance under FTA's Circulars for section 9 recipients. For assets other than revenue vehicles, the applicant is responsible for establishing a reasonable expected useful life. If the recipient does not intend to use the capital asset it is proposing to obtain by lease in mass transportation service for its entire expected useful life, when calculating the purchase cost, the recipient must calculate the fair market value of the asset as of the date the lease will terminate pursuant to Guidelines found in section 108(b) of part II Standard Terms and Conditions for valuation of property withdrawn from transit use before the end of its useful life and subtract that amount from the purchase price. The resulting amount is the purchase price for purposes of this rule.

§ 639.25 Calculation of lease cost.

(a) For purposes of this part, the lease cost of a capital asset is—

(1) The cost to lease the asset for the same use and same time period specified in the recipient's proposal to obtain the asset by purchase or construction; plus

(2) Ancillary costs such as delivery and installation; plus

(3) The net present value of the estimated future cost to provide any other service or benefit requested by the applicant in its proposal to obtain the capital asset.

(b) The estimated lease costs must be reasonable, based on realistic market conditions applicable to the recipient and must be expressed in present value terms.

§ 639.27 Minimum criteria.

In making the comparison between leasing and purchasing or constructing an asset, recipients should ascribe a realistic dollar value to any non-financial factors that are considered by using performance-based specifications in the comparison. In addition to factors unique to each recipient, the following factors are to be used where possible and appropriate:

(a) Operation costs;

(b) Reliability of service;

(c) Maintenance costs;

(d) Difference in warranties;

(e) Passenger comfort;

(f) Insurance costs;

(g) Costs/savings related to timing of acquisition of asset.

(h) Value of asset at expiration of the lease.

Subpart D—Lease Management

§ 639.31 Early lease termination or modification.

(a) Except as provided in paragraph (c) of this section, if a capital lease under this part is terminated or its terms substantially modified before the end of the period used in the cost-effectiveness evaluation, or if the recipient by an affirmative act or omission vitiates the cost-effectiveness determination of the lease, future lease costs will no longer qualify as eligible capital expenses. In addition, the recipient must reimburse the project—

(1) Any Federal funds paid for the portion of the lease term eliminated by early termination; and

(2) The Federal share of the excess, if any, of the present value of lease costs, which exceeds the purchase costs as calculated under subpart C of this part for the period of the lease up to the point of termination.

(b) Penalties resulting from early termination of a capital lease under this part are not eligible for Federal financial assistance.

(c) Paragraph (a) of this section does not apply if a lessor defaults on or otherwise does not meet its obligations under the capital lease and the recipient takes appropriate action to ensure

that the procurement continues to be cost-effective. FTA shall be notified of any such event.

§ 639.33 Management of leased assets.

Each recipient must maintain an inventory of capital assets acquired by standard FTA project management guidelines.

PART 640—CREDIT ASSISTANCE FOR SURFACE TRANSPORTATION PROJECTS

AUTHORITY: Secs. 1501 *et seq.*, Pub. L. 105–178, 112 Stat. 107, 241, as amended; 23 U.S.C. 181–189 and 315; 49 CFR 1.51.

§ 640.1 Cross-reference to credit assistance.

The regulations in 49 CFR part 80 shall be followed in complying with the requirements of this part. Title 49, CFR, part 80 implements the Transportation Infrastructure Finance and Innovation Act of 1998, secs. 1501 *et seq.*, Pub. L. 105–178, 112 Stat. 107, 241.

[64 FR 29753, June 2, 1999]

PART 655—PREVENTION OF ALCOHOL MISUSE AND PROHIBITED DRUG USE IN TRANSIT OPERATIONS

Subpart A—General

Sec.
655.1 Purpose.
655.2 Overview.
655.3 Applicability.
655.4 Definitions.
655.5 Stand-down waivers for drug testing.
655.6 Preemption of state and local laws.
655.7 Starting date for testing programs.

Subpart B—Program Requirements

655.11 Requirement to establish an anti-drug use and alcohol misuse program.
655.12 Required elements of an anti-drug use and alcohol misuse program.
655.13 [Reserved]
655.14 Education and training programs.
655.15 Policy statement contents.
655.16 Requirement to disseminate policy.
655.17 Notice requirement.
655.18–655.20 [Reserved]

Subpart C—Prohibited Drug Use

655.21 Drug testing.
655.22–655.30 [Reserved]

Subpart D—Prohibited Alcohol Use

655.31 Alcohol testing.
655.32 On duty use.
655.33 Pre-duty use.
655.34 Use following an accident.
655.35 Other alcohol-related conduct.
655.36–655.40 [Reserved]

Subpart E—Types of Testing

655.41 Pre-employment drug testing.
655.42 Pre-employment alcohol testing.
655.43 Reasonable suspicion testing.
655.44 Post-accident testing.
655.45 Random testing.
655.46 Return to duty following refusal to submit to a test, verified positive drug test result and/or breath alcohol test result of 0.04 or greater.
655.47 Follow-up testing after returning to duty.
655.48 Retesting of covered employees with an alcohol concentration of 0.02 or greater but less than 0.04.
655.49 Refusal to submit to a drug or alcohol test.
655.50 [Reserved]

Subpart F—Drug and Alcohol Testing Procedures

655.51 Compliance with testing procedures requirements.
655.52 Substance abuse professional (SAP).
655.53 Supervisor acting as collection site personnel.
655.54–655.60 [Reserved]

Subpart G—Consequences

655.61 Action when an employee has a verified positive drug test result or has a confirmed alcohol test result of 0.04 or greater, or refuses to submit to a test.
655.62 Referral, evaluation, and treatment.
655.63–655.70 [Reserved]

Subpart H—Administrative Requirements

655.71 Retention of records.
655.72 Reporting of results in a management information system.
655.73 Access to facilities and records.
655.74–655.80 [Reserved]

Subpart I—Certifying Compliance

655.81 Grantee oversight responsibility.
655.82 Compliance as a condition of financial assistance.
655.83 Requirement to certify compliance.

AUTHORITY: 49 U.S.C. 5331; 49 CFR 1.51.

SOURCE: 66 FR 42002, Aug. 9, 2001, unless otherwise noted.

Subpart A—General

§ 655.1 Purpose.

The purpose of this part is to establish programs to be implemented by employers that receive financial assistance from the Federal Transit Administration (FTA) and by contractors of those employers, that are designed to help prevent accidents, injuries, and fatalities resulting from the misuse of alcohol and use of prohibited drugs by employees who perform safety-sensitive functions.

§ 655.2 Overview.

(a) This part includes nine subparts. Subpart A of this part covers the general requirements of FTA's drug and alcohol testing programs. Subpart B of this part specifies the basic requirements of each employer's alcohol misuse and prohibited drug use program, including the elements required to be in each employer's testing program. Subpart C of this part describes prohibited drug use. Subpart D of this part describes prohibited alcohol use. Subpart E of this part describes the types of alcohol and drug tests to be conducted. Subpart F of this part addresses the testing procedural requirements mandated by the Omnibus Transportation Employee Testing Act of 1991, and as required in 49 CFR Part 40. Subpart G of this part lists the consequences for covered employees who engage in alcohol misuse or prohibited drug use. Subpart H of this part contains administrative matters, such as reports and recordkeeping requirements. Subpart I of this part specifies how a recipient certifies compliance with the rule.

(b) This part must be read in conjunction with 49 CFR Part 40, Procedures for Transportation Workplace Drug and Alcohol Testing Programs.

§ 655.3 Applicability.

(a) Except as specifically excluded in paragraphs (b), and (c) of this section, this part applies to:

(1) Each recipient and subrecipient receiving Federal assistance under:

(i) 49 U.S.C. 5307, 5309, or 5311; or

(ii) 23 U.S.C. 103(e)(4); and

(2) Any contractor of a recipient or subrecipient of Federal assistance under:

(i) 49 U.S.C. 5307, 5309, or 5311; or

(ii) 23 U.S.C. 103(e)(4).

(b) A recipient operating a railroad regulated by the Federal Railroad Administration (FRA) shall follow 49 CFR Part 219 and § 655.83 for its railroad operations, and shall follow this part for its non-railroad operations, if any.

(c) A recipient operating a ferryboat regulated by the United States Coast Guard (USCG) that satisfactorily complies with the testing requirements of 46 CFR Parts 4 and 16, and 33 CFR Part 95 shall be in concurrent compliance with the testing requirements of this part. This exception shall not apply to the provisions of section 655.45, or subparts G, or H of this part.

[66 FR 42002, Aug. 9, 2001, as amended at 71 FR 69198, Nov. 30, 2006]

§ 655.4 Definitions.

For this part, the terms listed in this section have the following definitions. The definitions of additional terms used in this part but not listed in this section can be found in 49 CFR Part 40.

Accident means an occurrence associated with the operation of a vehicle, if as a result:

(1) An individual dies; or

(2) An individual suffers bodily injury and immediately receives medical treatment away from the scene of the accident; or

(3) With respect to an occurrence in which the mass transit vehicle involved is a bus, electric bus, van, or automobile, one or more vehicles (including non-FTA funded vehicles) incurs disabling damage as the result of the occurrence and such vehicle or vehicles are transported away from the scene by a tow truck or other vehicle; or

(4) With respect to an occurrence in which the mass transit vehicle involved is a rail car, trolley car, trolley bus, or vessel, the mass transit vehicle is removed from operation.

Administrator means the Administrator of the Federal Transit Administration or the Administrator's designee.

Anti-drug program means a program to detect and deter the use of prohibited drugs as required by this part.

Certification means a recipient's written statement, authorized by the organization's governing board or other authorizing official that the recipient has complied with the provisions of this part. (See § 655.82 and § 655.83 for certification requirements.)

Contractor means a person or organization that provides a safety-sensitive service for a recipient, subrecipient, employer, or operator consistent with a specific understanding or arrangement. The understanding can be a written contract or an informal arrangement that reflects an ongoing relationship between the parties.

Covered employee means a person, including an applicant or transferee, who performs or will perform a safety-sensitive function for an entity subject to this part. A volunteer is a covered employee if:

(1) The volunteer is required to hold a commercial driver's license to operate the vehicle; or

(2) The volunteer performs a safety-sensitive function for an entity subject to this part and receives remuneration in excess of his or her actual expenses incurred while engaged in the volunteer activity.

Disabling damage means damage that precludes departure of a motor vehicle from the scene of the accident in its usual manner in daylight after simple repairs.

(1) *Inclusion*. Damage to a motor vehicle, where the vehicle could have been driven, but would have been further damaged if so driven.

(2) *Exclusions*. (i) Damage that can be remedied temporarily at the scene of the accident without special tools or parts.

(ii) Tire disablement without other damage even if no spare tire is available.

(iii) Headlamp or tail light damage.

(iv) Damage to turn signals, horn, or windshield wipers, which makes the vehicle inoperable.

DOT or *The Department* means the United States Department of Transportation.

DOT agency means an agency (or ''operating administration'') of the United States Department of Transportation administering regulations requiring drug and alcohol testing. See 14 CFR part 121, appendices I and J; 33 CFR part 95; 46 CFR parts 4, 5, and 16; and 49 CFR parts 199, 219, 382, and 655.

Employer means a recipient or other entity that provides mass transportation service or which performs a safety-sensitive function for such recipient or other entity. This term includes subrecipients, operators, and contractors.

FTA means the Federal Transit Administration, an agency of the U.S. Department of Transportation.

Performing (a safety-sensitive function) means a covered employee is considered to be performing a safety-sensitive function and includes any period in which he or she is actually performing, ready to perform, or immediately available to perform such functions.

Positive rate for random drug testing means the number of verified positive results for random drug tests conducted under this part plus the number of refusals of random drug tests required by this part, divided by the total number of random drug tests results (*i.e.*, positive, negative, and refusals) under this part.

Railroad means:

(1) All forms of non-highway ground transportation that run on rails or electromagnetic guideways, including:

(i) Commuter or other short-haul rail passenger service in a metropolitan or suburban area, as well as any commuter rail service that was operated by the Consolidated Rail Corporation as of January 1, 1979; and

(ii) High speed ground transportation systems that connect metropolitan areas, without regard to whether they use new technologies not associated with traditional railroads.

(2) Such term does not include rapid transit operations within an urban area that are not connected to the general railroad system of transportation.

Recipient means an entity receiving Federal financial assistance under 49 U.S.C. 5307, 5309, or 5311; or under 23 U.S.C. 103(e)(4).

Refuse to submit means any circumstance outlined in 49 CFR 40.191 and 40.261.

Safety-sensitive function means any of the following duties, when performed by employees of recipients, subrecipients, operators, or contractors:

(1) Operating a revenue service vehicle, including when not in revenue service;

(2) Operating a nonrevenue service vehicle, when required to be operated by a holder of a Commercial Driver's License;

(3) Controlling dispatch or movement of a revenue service vehicle;

(4) Maintaining (including repairs, overhaul and rebuilding) a revenue service vehicle or equipment used in revenue service. This section does not apply to the following: an employer who receives funding under 49 U.S.C. 5307 or 5309, is in an area less than 200,000 in population, and contracts out such services; or an employer who receives funding under 49 U.S.C. 5311 and contracts out such services;

(5) Carrying a firearm for security purposes.

Vehicle means a bus, electric bus, van, automobile, rail car, trolley car, trolley bus, or vessel. A mass transit vehicle is a vehicle used for mass transportation or for ancillary services.

Violation rate for random alcohol testing means the number of 0.04 and above random alcohol confirmation test results conducted under this part plus the number of refusals of random alcohol tests required by this part, divided by the total number of alcohol random screening tests (including refusals) conducted under this part.

[66 FR 42002, Aug. 9, 2001, as amended at 68 FR 75462, Dec. 31, 2003]

§ 655.5 Stand-down waivers for drug testing.

(a) An employer subject to this part may petition the FTA for a waiver allowing the employer to stand down, per 49 CFR Part 40, an employee following a report of a laboratory confirmed positive drug test or refusal, pending the outcome of the verification process.

(b) Each petition for a waiver must be in writing and include facts and justification to support the waiver. Each petition must satisfy the requirements for obtaining a waiver, as provided in 49 CFR 40.21.

(c) Each petition for a waiver must be submitted to the Office of Safety and Security, Federal Transit Administration, U.S. Department of Transportation, 400 Seventh Street, SW. Washington, DC 20590.

(d) The Administrator may grant a waiver subject to 49 CFR 40.21(d).

§ 655.6 Preemption of state and local laws.

(a) Except as provided in paragraph (b) of this section, this part preempts any state or local law, rule, regulation, or order to the extent that:

(1) Compliance with both the state or local requirement and any requirement in this part is not possible; or

(2) Compliance with the state or local requirement is an obstacle to the accomplishment and execution of any requirement in this part.

(b) This part shall not be construed to preempt provisions of state criminal laws that impose sanctions for reckless conduct attributed to prohibited drug use or alcohol misuse leading to actual loss of life, injury, or damage to property, whether the provisions apply specifically to transportation employees or employers or to the general public.

§ 655.7 Starting date for testing programs.

An employer must have an anti-drug and alcohol misuse testing program in place by the date the employer begins operations.

Subpart B—Program Requirements

§ 655.11 Requirement to establish an anti-drug use and alcohol misuse program.

Each employer shall establish an anti-drug use and alcohol misuse program consistent with the requirements of this part.

§ 655.12 Required elements of an anti-drug use and alcohol misuse program.

An anti-drug use and alcohol misuse program shall include the following:

(a) A statement describing the employer's policy on prohibited drug use and alcohol misuse in the workplace, including the consequences associated with prohibited drug use and alcohol

misuse. This policy statement shall include all of the elements specified in § 655.15. Each employer shall disseminate the policy consistent with the provisions of § 655.16.

(b) An education and training program which meets the requirements of § 655.14.

(c) A testing program, as described in Subparts C and D of this part, which meets the requirements of this part and 49 CFR Part 40.

(d) Procedures for referring a covered employee who has a verified positive drug test result or an alcohol concentration of 0.04 or greater to a Substance Abuse Professional, consistent with 49 CFR Part 40.

§ 655.13 [Reserved]

§ 655.14 Education and training programs.

Each employer shall establish an employee education and training program for all covered employees, including:

(a) *Education*. The education component shall include display and distribution to every covered employee of: informational material and a community service hot-line telephone number for employee assistance, if available.

(b) *Training*—(1) *Covered employees*. Covered employees must receive at least 60 minutes of training on the effects and consequences of prohibited drug use on personal health, safety, and the work environment, and on the signs and symptoms that may indicate prohibited drug use.

(2) *Supervisors*. Supervisors and/or other company officers authorized by the employer to make reasonable suspicion determinations shall receive at least 60 minutes of training on the physical, behavioral, and performance indicators of probable drug use and at least 60 minutes of training on the physical, behavioral, speech, and performance indicators of probable alcohol misuse.

§ 655.15 Policy statement contents.

The local governing board of the employer or operator shall adopt an anti-drug and alcohol misuse policy statement. The statement must be made available to each covered employee, and shall include the following:

(a) The identity of the person, office, branch and/or position designated by the employer to answer employee questions about the employer's anti-drug use and alcohol misuse programs.

(b) The categories of employees who are subject to the provisions of this part.

(c) Specific information concerning the behavior and conduct prohibited by this part.

(d) The specific circumstances under which a covered employee will be tested for prohibited drugs or alcohol misuse under this part.

(e) The procedures that will be used to test for the presence of illegal drugs or alcohol misuse, protect the employee and the integrity of the drug and alcohol testing process, safeguard the validity of the test results, and ensure the test results are attributed to the correct covered employee.

(f) The requirement that a covered employee submit to drug and alcohol testing administered in accordance with this part.

(g) A description of the kind of behavior that constitutes a refusal to take a drug or alcohol test, and a statement that such a refusal constitutes a violation of the employer's policy.

(h) The consequences for a covered employee who has a verified positive drug or a confirmed alcohol test result with an alcohol concentration of 0.04 or greater, or who refuses to submit to a test under this part, including the mandatory requirements that the covered employee be removed immediately from his or her safety-sensitive function and be evaluated by a substance abuse professional, as required by 49 CFR Part 40.

(i) The consequences, as set forth in § 655.35 of subpart D, for a covered employee who is found to have an alcohol concentration of 0.02 or greater but less than 0.04.

(j) The employer shall inform each covered employee if it implements elements of an anti-drug use or alcohol misuse program that are not required by this part. An employer may not impose requirements that are inconsistent with, contrary to, or frustrate the provisions of this part.

§ 655.16 Requirement to disseminate policy.

Each employer shall provide written notice to every covered employee and to representatives of employee organizations of the employer's anti-drug and alcohol misuse policies and procedures.

§ 655.17 Notice requirement.

Before performing a drug or alcohol test under this part, each employer shall notify a covered employee that the test is required by this part. No employer shall falsely represent that a test is administered under this part.

§§ 655.18–655.20 [Reserved]

Subpart C—Prohibited Drug Use

§ 655.21 Drug testing.

(a) An employer shall establish a program that provides testing for prohibited drugs and drug metabolites in the following circumstances: pre-employment, post-accident, reasonable suspicion, random, and return to duty/follow-up.

(b) When administering a drug test, an employer shall ensure that the following drugs are tested for:

(1) Marijuana;

(2) Cocaine;

(3) Opiates;

(4) Amphetamines; and

(5) Phencyclidine.

(c) Consumption of these products is prohibited at all times.

§§ 655.22–655.30 [Reserved]

Subpart D—Prohibited Alcohol Use

§ 655.31 Alcohol testing.

(a) An employer shall establish a program that provides for testing for alcohol in the following circumstances: post-accident, reasonable suspicion, random, and return to duty/follow-up. An employer may also conduct pre-employment alcohol testing.

(b) Each employer shall prohibit a covered employee, while having an alcohol concentration of 0.04 or greater, from performing or continuing to perform a safety-sensitive function.

§ 655.32 On duty use.

Each employer shall prohibit a covered employee from using alcohol while performing safety-sensitive functions. No employer having actual knowledge that a covered employee is using alcohol while performing safety-sensitive functions shall permit the employee to perform or continue to perform safety-sensitive functions.

§ 655.33 Pre-duty use.

(a) *General.* Each employer shall prohibit a covered employee from using alcohol within 4 hours prior to performing safety-sensitive functions. No employer having actual knowledge that a covered employee has used alcohol within four hours of performing a safety-sensitive function shall permit the employee to perform or continue to perform safety-sensitive functions.

(b) *On-call employees.* An employer shall prohibit the consumption of alcohol for the specified on-call hours of each covered employee who is on-call. The procedure shall include:

(1) The opportunity for the covered employee to acknowledge the use of alcohol at the time he or she is called to report to duty and the inability to perform his or her safety-sensitive function.

(2) The requirement that the covered employee take an alcohol test, if the covered employee has acknowledged the use of alcohol, but claims ability to perform his or her safety-sensitive function.

§ 655.34 Use following an accident.

Each employer shall prohibit alcohol use by any covered employee required to take a post-accident alcohol test under § 655.44 for eight hours following the accident or until he or she undergoes a post-accident alcohol test, whichever occurs first.

§ 655.35 Other alcohol-related conduct.

(a) No employer shall permit a covered employee tested under the provisions of subpart E of this part who is found to have an alcohol concentration of 0.02 or greater but less than 0.04 to perform or continue to perform safety-sensitive functions, until:

(1) The employee's alcohol concentration measures less than 0.02; or

(2) The start of the employee's next regularly scheduled duty period, but not less than eight hours following administration of the test.

(b) Except as provided in paragraph (a) of this section, no employer shall take any action under this part against an employee based solely on test results showing an alcohol concentration less than 0.04. This does not prohibit an employer with authority independent of this part from taking any action otherwise consistent with law.

§§ 655.36–655.40 [Reserved]

Subpart E—Types of Testing

§ 655.41 Pre-employment drug testing.

(a)(1) Before allowing a covered employee or applicant to perform a safety-sensitive function for the first time, the employer must ensure that the employee takes a pre-employment drug test administered under this part with a verified negative result. An employer may not allow a covered employee, including an applicant, to perform a safety-sensitive function unless the employee takes a drug test administered under this part with a verified negative result.

(2) When a covered employee or applicant has previously failed or refused a pre-employment drug test administered under this part, the employee must provide the employer proof of having successfully completed a referral, evaluation and treatment plan as described in § 655.62.

(b) An employer may not transfer an employee from a nonsafety-sensitive function to a safety-sensitive function until the employee takes a pre-employment drug test administered under this part with a verified negative result.

(c) If a pre-employment drug test is canceled, the employer shall require the covered employee or applicant to take another pre-employment drug test administered under this part with a verified negative result.

(d) When a covered employee or applicant has not performed a safety-sensitive function for 90 consecutive calendar days regardless of the reason, and the employee has not been in the employer's random selection pool during that time, the employer shall ensure that the employee takes a pre-employment drug test with a verified negative result.

§ 655.42 Pre-employment alcohol testing.

An employer may, but is not required to, conduct pre-employment alcohol testing under this part. If an employer chooses to conduct pre-employment alcohol testing, the employer must comply with the following requirements:

(a) The employer must conduct a pre-employment alcohol test before the first performance of safety-sensitive functions by every covered employee (whether a new employee or someone who has transferred to a position involving the performance of safety-sensitive functions).

(b) The employer must treat all covered employees performing safety-sensitive functions the same for the purpose of pre-employment alcohol testing (*i.e.*, you must not test some covered employees and not others).

(c) The employer must conduct the pre-employment tests after making a contingent offer of employment or transfer, subject to the employee passing the pre-employment alcohol test.

(d) The employer must conduct all pre-employment alcohol tests using the alcohol testing procedures set forth in 49 CFR Part 40.

(e) The employer must not allow a covered employee to begin performing safety-sensitive functions unless the result of the employee's test indicates an alcohol concentration of less than 0.02.

§ 655.43 Reasonable suspicion testing.

(a) An employer shall conduct a drug and/or alcohol test when the employer has reasonable suspicion to believe that the covered employee has used a prohibited drug and/or engaged in alcohol misuse.

(b) An employer's determination that reasonable suspicion exists shall be based on specific, contemporaneous, articulable observations concerning the appearance, behavior, speech, or body odors of the covered employee. A supervisor(s), or other company official(s) who is trained in detecting the

signs and symptoms of drug use and alcohol misuse must make the required observations.

(c) Alcohol testing is authorized under this section only if the observations required by paragraph (b) of this section are made during, just preceding, or just after the period of the workday that the covered employee is required to be in compliance with this part. An employer may direct a covered employee to undergo reasonable suspicion testing for alcohol only while the employee is performing safety-sensitive functions; just before the employee is to perform safety-sensitive functions; or just after the employee has ceased performing such functions.

(d) If an alcohol test required by this section is not administered within two hours following the determination under paragraph (b) of this section, the employer shall prepare and maintain on file a record stating the reasons the alcohol test was not promptly administered. If an alcohol test required by this section is not administered within eight hours following the determination under paragraph (b) of this section, the employer shall cease attempts to administer an alcohol test and shall state in the record the reasons for not administering the test.

§ 655.44 Post-accident testing.

(a) Accidents. (1) *Fatal accidents.* (i) As soon as practicable following an accident involving the loss of human life, an employer shall conduct drug and alcohol tests on each surviving covered employee operating the mass transit vehicle at the time of the accident. Post-accident drug and alcohol testing of the operator is not required under this section if the covered employee is tested under the fatal accident testing requirements of the Federal Motor Carrier Safety Administration rule 49 CFR 389.303(a)(1) or (b)(1).

(ii) The employer shall also drug and alcohol test any other covered employee whose performance could have contributed to the accident, as determined by the employer using the best information available at the time of the decision.

(2) *Nonfatal accidents.* (i) As soon as practicable following an accident not involving the loss of human life in which a mass transit vehicle is involved, the employer shall drug and alcohol test each covered employee operating the mass transit vehicle at the time of the accident unless the employer determines, using the best information available at the time of the decision, that the covered employee's performance can be completely discounted as a contributing factor to the accident. The employer shall also drug and alcohol test any other covered employee whose performance could have contributed to the accident, as determined by the employer using the best information available at the time of the decision.

(ii) If an alcohol test required by this section is not administered within two hours following the accident, the employer shall prepare and maintain on file a record stating the reasons the alcohol test was not promptly administered. If an alcohol test required by this section is not administered within eight hours following the accident, the employer shall cease attempts to administer an alcohol test and maintain the record. Records shall be submitted to FTA upon request of the Administrator.

(b) An employer shall ensure that a covered employee required to be drug tested under this section is tested as soon as practicable but within 32 hours of the accident.

(c) A covered employee who is subject to post-accident testing who fails to remain readily available for such testing, including notifying the employer or the employer representative of his or her location if he or she leaves the scene of the accident prior to submission to such test, may be deemed by the employer to have refused to submit to testing.

(d) The decision not to administer a drug and/or alcohol test under this section shall be based on the employer's determination, using the best available information at the time of the determination that the employee's performance could not have contributed to the accident. Such a decision must be documented in detail, including the decision-making process used to reach the decision not to test.

(e) Nothing in this section shall be construed to require the delay of necessary medical attention for the injured following an accident or to prohibit a covered employee from leaving the scene of an accident for the period necessary to obtain assistance in responding to the accident or to obtain necessary emergency medical care.

(f) The results of a blood, urine, or breath test for the use of prohibited drugs or alcohol misuse, conducted by Federal, State, or local officials having independent authority for the test, shall be considered to meet the requirements of this section provided such test conforms to the applicable Federal, State, or local testing requirements, and that the test results are obtained by the employer. Such test results may be used only when the employer is unable to perform a post-accident test within the required period noted in paragraphs (a) and (b) of this section.

§ 655.45 Random testing.

(a) Except as provided in paragraphs (b) through (d) of this section, the minimum annual percentage rate for random drug testing shall be 50 percent of covered employees; the random alcohol testing rate shall be 10 percent. As provided in paragraph (b) of this section, this rate is subject to annual review by the Administrator.

(b) The Administrator's decision to increase or decrease the minimum annual percentage rate for random drug and alcohol testing is based, respectively, on the reported positive drug and alcohol violation rates for the entire industry. All information used for this determination is drawn from the drug and alcohol Management Information System (MIS) reports required by this part. In order to ensure reliability of the data, the Administrator shall consider the quality and completeness of the reported data, may obtain additional information or reports from employers, and may make appropriate modifications in calculating the industry's verified positive results and violation rates. Each year, the Administrator will publish in the FEDERAL REGISTER the minimum annual percentage rates for random drug and alcohol testing of covered employees. The new minimum annual percentage rate for random drug and alcohol testing will be applicable starting January 1 of the calendar year following publication.

(c) Rates for drug testing. (1) When the minimum annual percentage rate for random drug testing is 50 percent, the Administrator may lower this rate to 25 percent of all covered employees if the Administrator determines that the data received under the reporting requirements of § 655.72 for the two preceding consecutive calendar years indicate that the reported positive rate is less than 1.0 percent.

(2) When the minimum annual percentage rate for random drug testing is 25 percent, and the data received under the reporting requirements of § 655.72 for the calendar year indicate that the reported positive rate is equal to or greater than 1.0 percent, the Administrator will increase the minimum annual percentage rate for random drug or random alcohol testing to 50 percent of all covered employees.

(d) Rates for alcohol testing. (1)(i) When the minimum annual percentage rate for random alcohol testing is 25 percent or more, the Administrator may lower this rate to 10 percent of all covered employees if the Administrator determines that the data received under the reporting requirements of § 655.72 for two consecutive calendar years indicate that the violation rate is less than 0.5 percent.

(ii) When the minimum annual percentage rate for random alcohol testing is 50 percent, the Administrator may lower this rate to 25 percent of all covered employees if the Administrator determines that the data received under the reporting requirements of § 655.72 for two consecutive calendar years indicate that the violation rate is less than 1.0 percent but equal to or greater than 0.5 percent.

(2)(i) When the minimum annual percentage rate for random alcohol testing is 10 percent, and the data received under the reporting requirements of § 655.72 for that calendar year indicate that the violation rate is equal to or greater than 0.5 percent, but less than 1.0 percent, the Administrator will increase the minimum annual percentage

rate for random alcohol testing to 25 percent of all covered employees.

(ii) When the minimum annual percentage rate for random alcohol testing is 25 percent or less, and the data received under the reporting requirements of § 655.72 for that calendar year indicate that the violation rate is equal to or greater than 1.0 percent, the Administrator will increase the minimum annual percentage rate for random alcohol testing to 50 percent of all covered employees.

(e) The selection of employees for random drug and alcohol testing shall be made by a scientifically valid method, such as a random number table or a computer-based random number generator that is matched with employees' Social Security numbers, payroll identification numbers, or other comparable identifying numbers. Under the selection process used, each covered employee shall have an equal chance of being tested each time selections are made.

(f) The employer shall randomly select a sufficient number of covered employees for testing during each calendar year to equal an annual rate not less than the minimum annual percentage rates for random drug and alcohol testing determined by the Administrator. If the employer conducts random drug and alcohol testing through a consortium, the number of employees to be tested may be calculated for each individual employer or may be based on the total number of covered employees covered by the consortium who are subject to random drug and alcohol testing at the same minimum annual percentage rate under this part.

(g) Each employer shall ensure that random drug and alcohol tests conducted under this part are unannounced and unpredictable, and that the dates for administering random tests are spread reasonably throughout the calendar year. Random testing must be conducted at all times of day when safety-sensitive functions are performed.

(h) Each employer shall require that each covered employee who is notified of selection for random drug or random alcohol testing proceed to the test site immediately. If the employee is performing a safety-sensitive function at the time of the notification, the employer shall instead ensure that the employee ceases to perform the safety-sensitive function and proceeds to the testing site immediately.

(i) A covered employee shall only be randomly tested for alcohol misuse while the employee is performing safety-sensitive functions; just before the employee is to perform safety-sensitive functions; or just after the employee has ceased performing such functions. A covered employee may be randomly tested for prohibited drug use anytime while on duty.

(j) If a given covered employee is subject to random drug and alcohol testing under the testing rules of more than one DOT agency for the same employer, the employee shall be subject to random drug and alcohol testing at the percentage rate established for the calendar year by the DOT agency regulating more than 50 percent of the employee's function.

(k) If an employer is required to conduct random drug and alcohol testing under the drug and alcohol testing rules of more than one DOT agency, the employer may—

(1) Establish separate pools for random selection, with each pool containing the covered employees who are subject to testing at the same required rate; or

(2) Randomly select such employees for testing at the highest percentage rate established for the calendar year by any DOT agency to which the employer is subject.

§ 655.46 Return to duty following refusal to submit to a test, verified positive drug test result and/or breath alcohol test result of 0.04 or greater.

Where a covered employee refuses to submit to a test, has a verified positive drug test result, and/or has a confirmed alcohol test result of 0.04 or greater, the employer, before returning the employee to duty to perform a safety-sensitive function, shall follow the procedures outlined in 49 CFR Part 40.

§ 655.47 Follow-up testing after returning to duty.

An employer shall conduct follow-up testing of each employee who returns

to duty, as specified in 49 CFR Part 40, subpart O.

§ 655.48 Retesting of covered employees with an alcohol concentration of 0.02 or greater but less than 0.04.

If an employer chooses to permit a covered employee to perform a safety-sensitive function within 8 hours of an alcohol test indicating an alcohol concentration of 0.02 or greater but less than 0.04, the employer shall retest the covered employee to ensure compliance with the provisions of § 655.35. The covered employee may not perform safety-sensitive functions unless the confirmation alcohol test result is less than 0.02.

§ 655.49 Refusal to submit to a drug or alcohol test.

(a) Each employer shall require a covered employee to submit to a post-accident drug and alcohol test required under § 655.44, a random drug and alcohol test required under § 655.45, a reasonable suspicion drug and alcohol test required under § 655.43, or a follow-up drug and alcohol test required under § 655.47. No employer shall permit an employee who refuses to submit to such a test to perform or continue to perform safety-sensitive functions.

(b) When an employee refuses to submit to a drug or alcohol test, the employer shall follow the procedures outlined in 49 CFR Part 40.

§ 655.50 [Reserved]

Subpart F—Drug and Alcohol Testing Procedures

§ 655.51 Compliance with testing procedures requirements.

The drug and alcohol testing procedures in 49 CFR Part 40 apply to employers covered by this part, and must be read together with this part, unless expressly provided otherwise in this part.

§ 655.52 Substance abuse professional (SAP).

The SAP must perform the functions in 49 CFR Part 40.

§ 655.53 Supervisor acting as collection site personnel.

An employer shall not permit an employee with direct or immediate supervisory responsibility or authority over another employee to serve as the urine collection person, breath alcohol technician, or saliva-testing technician for a drug or alcohol test of the employee.

§§ 655.54–655.60 [Reserved]

Subpart G—Consequences

§ 655.61 Action when an employee has a verified positive drug test result or has a confirmed alcohol test result of 0.04 or greater, or refuses to submit to a test.

(a) (1) Immediately after receiving notice from a medical review officer (MRO) or a consortium/third party administrator (C/TPA) that a covered employee has a verified positive drug test result, the employer shall require that the covered employee cease performing a safety-sensitive function.

(2) Immediately after receiving notice from a Breath Alcohol Technician (BAT) that a covered employee has a confirmed alcohol test result of 0.04 or greater, the employer shall require that the covered employee cease performing a safety-sensitive function.

(3) If an employee refuses to submit to a drug or alcohol test required by this part, the employer shall require that the covered employee cease performing a safety-sensitive function.

(b) Before allowing the covered employee to resume performing a safety-sensitive function, the employer shall ensure the employee meets the requirements of 49 CFR Part 40 for returning to duty, including taking a return to duty drug and/or alcohol test.

§ 655.62 Referral, evaluation, and treatment.

If a covered employee has a verified positive drug test result, or has a confirmed alcohol test of 0.04 or greater, or refuses to submit to a drug or alcohol test required by this part, the employer shall advise the employee of the resources available for evaluating and resolving problems associated with prohibited drug use and alcohol misuse, including the names, addresses, and

telephone numbers of substance abuse professionals (SAPs) and counseling and treatment programs.

§§ 655.63–655.70 [Reserved]

Subpart H—Administrative Requirements

§ 655.71 Retention of records.

(a) *General requirement.* An employer shall maintain records of its anti-drug and alcohol misuse program as provided in this section. The records shall be maintained in a secure location with controlled access.

(b) *Period of retention.* In determining compliance with the retention period requirement, each record shall be maintained for the specified minimum period of time as measured from the date of the creation of the record. Each employer shall maintain the records in accordance with the following schedule:

(1) *Five years.* Records of covered employee verified positive drug or alcohol test results, documentation of refusals to take required drug or alcohol tests, and covered employee referrals to the substance abuse professional, and copies of annual MIS reports submitted to FTA.

(2) *Two years.* Records related to the collection process and employee training.

(3) *One year.* Records of negative drug or alcohol test results.

(c) *Types of records.* The following specific records must be maintained:

(1) Records related to the collection process:

(i) Collection logbooks, if used.

(ii) Documents relating to the random selection process.

(iii) Documents generated in connection with decisions to administer reasonable suspicion drug or alcohol tests.

(iv) Documents generated in connection with decisions on post-accident drug and alcohol testing.

(v) MRO documents verifying existence of a medical explanation of the inability of a covered employee to provide an adequate urine or breathe sample.

(2) Records related to test results:

(i) The employer's copy of the custody and control form.

(ii) Documents related to the refusal of any covered employee to submit to a test required by this part.

(iii) Documents presented by a covered employee to dispute the result of a test administered under this part.

(3) Records related to referral and return to duty and follow-up testing: Records concerning a covered employee's entry into and completion of the treatment program recommended by the substance abuse professional.

(4) Records related to employee training:

(i) Training materials on drug use awareness and alcohol misuse, including a copy of the employer's policy on prohibited drug use and alcohol misuse.

(ii) Names of covered employees attending training on prohibited drug use and alcohol misuse and the dates and times of such training.

(iii) Documentation of training provided to supervisors for the purpose of qualifying the supervisors to make a determination concerning the need for drug and alcohol testing based on reasonable suspicion.

(iv) Certification that any training conducted under this part complies with the requirements for such training.

(5) Copies of annual MIS reports submitted to FTA.

§ 655.72 Reporting of results in a management information system.

(a) Each recipient shall annually prepare and maintain a summary of the results of its anti-drug and alcohol misuse testing programs performed under this part during the previous calendar year.

(b) When requested by FTA, each recipient shall submit to FTA's Office of Safety and Security, or its designated agent, by March 15, a report covering the previous calendar year (January 1 through December 31) summarizing the results of its anti-drug and alcohol misuse programs.

(c) Each recipient shall be responsible for ensuring the accuracy and timeliness of each report submitted by an employer, contractor, consortium or joint enterprise or by a third party service provider acting on the recipient's or employer's behalf.

(d) As an employer, you must use the Management Information System (MIS) form and instructions as required by 49 CFR part 40, § 40.25 and appendix H. You may also use the electronic version of the MIS form provided by the DOT. The Administrator may designate means (e.g., electronic program transmitted via the Internet), other than hard-copy, for MIS form submission. For information on where to submit MIS forms and for the electronic version of the form, see: *http://transit-safety.volpe.dot.gov/DAMIS*.

(e) To calculate the total number of covered employees eligible for random testing throughout the year, as an employer, you must add the total number of covered employees eligible for testing during each random testing period for the year and divide that total by the number of random testing periods. Covered employees, and only covered employees, are to be in an employer's random testing pool, and all covered employees must be in the random pool. If you are an employer conducting random testing more often than once per month (e.g., you select daily, weekly, bi-weekly), you do not need to compute this total number of covered employees rate more than on a once per month basis. As an employer, you may use a service agent (e.g., C/TPA) to perform random selections for you; and your covered employees may be part of a larger random testing pool of covered employees. However, you must ensure that the service agent you use is testing at the appropriate percentage established for your industry and that only covered employees are in the random testing pool.

(f) If you have a covered employee who performs multi-DOT agency functions (e.g., an employee drives a paratransit vehicle and performs pipeline maintenance duties for you), count the employee only on the MIS report for the DOT agency under which he or she is random tested. Normally, this will be the DOT agency under which the employee performs more than 50% of his or her duties. Employers may have to explain the testing data for these employees in the event of a DOT agency inspection or audit.

(g) A service agent (e.g., Consortia/Third Party Administrator as defined in 49 CFR part 40) may prepare the MIS report on behalf of an employer. However, a company official (e.g., Designated Employer Representative as defined in 49 CFR part 40) must certify the accuracy and completeness of the MIS report, no matter who prepares it.

[66 FR 42002, Aug. 9, 2001, as amended at 68 FR 75462, Dec. 31, 2003]

§ 655.73 Access to facilities and records.

(a) Except as required by law, or expressly authorized or required in this section, no employer may release information pertaining to a covered employee that is contained in records required to be maintained by § 655.71.

(b) A covered employee is entitled, upon written request, to obtain copies of any records pertaining to the covered employee's use of prohibited drugs or misuse of alcohol, including any records pertaining to his or her drug or alcohol tests. The employer shall provide promptly the records requested by the employee. Access to a covered employee's records shall not be contingent upon the employer's receipt of payment for the production of those records.

(c) An employer shall permit access to all facilities utilized and records compiled in complying with the requirements of this part to the Secretary of Transportation or any DOT agency with regulatory authority over the employer or any of its employees or to a State oversight agency authorized to oversee rail fixed guideway systems.

(d) An employer shall disclose data for its drug and alcohol testing programs, and any other information pertaining to the employer's anti-drug and alcohol misuse programs required to be maintained by this part, to the Secretary of Transportation or any DOT agency with regulatory authority over the employer or covered employee or to a State oversight agency authorized to oversee rail fixed guideway systems, upon the Secretary's request or the respective agency's request.

(e) When requested by the National Transportation Safety Board as part of an accident investigation, employers shall disclose information related to the employer's drug or alcohol testing

related to the accident under investigation.

(f) Records shall be made available to a subsequent employer upon receipt of a written request from the covered employee. Subsequent disclosure by the employer is permitted only as expressly authorized by the terms of the covered employee's request.

(g) An employer may disclose information required to be maintained under this part pertaining to a covered employee to the employee or the decisionmaker in a lawsuit, grievance, or other proceeding initiated by or on behalf of the individual, and arising from the results of a drug or alcohol test under this part (including, but not limited to, a worker's compensation, unemployment compensation, or other proceeding relating to a benefit sought by the covered employee.)

(h) An employer shall release information regarding a covered employee's record as directed by the specific, written consent of the employee authorizing release of the information to an identified person.

(i) An employer may disclose drug and alcohol testing information required to be maintained under this part, pertaining to a covered employee, to the State oversight agency or grantee required to certify to FTA compliance with the drug and alcohol testing procedures of 49 CFR parts 40 and 655.

§§ 655.74–655.80 [Reserved]

Subpart I—Certifying Compliance

§ 655.81 Grantee oversight responsibility.

A grantee shall ensure that the recipients of funds under 49 U.S.C. 5307, 5309, 5311 or 23 U.S.C. 103(e)(4) comply with this part.

§ 655.82 Compliance as a condition of financial assistance.

(a) *General.* A recipient may not be eligible for Federal financial assistance under 49 U.S.C. 5307, 5309, or 5311 or under 23 U.S.C. 103(e)(4), if a recipient fails to establish and implement an anti-drug and alcohol misuse program as required by this part. Failure to certify compliance with these requirements, as specified in § 655.83, may result in the suspension of a grantee's eligibility for Federal funding.

(b) *Criminal violation.* A recipient is subject to criminal sanctions and fines for false statements or misrepresentations under 18 U.S.C. 1001.

(c) *State's role.* Each State shall certify compliance on behalf of its 49 U.S.C. 5307, 5309, 5311 or 23 U.S.C. 103(e)(4) subrecipients, as applicable. In so certifying, the State shall ensure that each subrecipient is complying with the requirements of this part. A section 5307, 5309, 5311 or 103(e)(4) subrecipient, through the administering State, is subject to suspension of funding from the State if such subrecipient is not in compliance with this part.

§ 655.83 Requirement to certify compliance.

(a) A recipient of FTA financial assistance shall annually certify compliance, as set forth in § 655.82, to the applicable FTA Regional Office.

(b) A certification must be authorized by the organization's governing board or other authorizing official, and must be signed by a party specifically authorized to do so.

(c) A recipient will be ineligible for further FTA financial assistance if the recipient fails to establish and implement an anti-drug and alcohol misuse program in accordance with this part.

(d) FTA may determine that a recipient, who fails to comply with the USCG chemical and alcohol testing requirements, shall be in noncompliance with the alcohol misuse and controlled substances testing requirements of this part. A finding of noncompliance by FTA may lead to the suspension of eligibility for Federal public transportation funding.

[66 FR 42002, Aug. 9, 2001, as amended at 71 FR 69198, Nov. 30, 2006]

PART 659—RAIL FIXED GUIDEWAY SYSTEMS; STATE SAFETY OVERSIGHT

Subpart A—General Provisions

Sec.

659.1 Purpose.
659.3 Scope.
659.5 Definitions.

Subpart B—Role of the State

659.7 Withholding of funds for noncompliance.
659.9 Designation of oversight agency.
659.11 Confidentiality of investigation reports and security plans.

Subpart C—Role of the State Oversight Agency

659.13 Overview.
659.15 System safety program standard.
659.17 System safety program plan: general requirements.
659.19 System safety program plan: contents.
659.21 System security plan: general requirements.
659.23 System security plan: contents.
659.25 Annual review of system safety program plan and system security plan.
659.27 Internal safety and security reviews.
659.29 Oversight agency safety and security reviews.
659.31 Hazard management process.
659.33 Accident notification.
659.35 Investigations.
659.37 Corrective action plans.
659.39 Oversight agency reporting to the Federal Transit Administration.
659.41 Conflict of interest.
659.43 Certification of compliance.

AUTHORITY: 49 U.S.C. 5330.

SOURCE: 70 FR 22578, Apr. 29, 2005, unless otherwise noted.

Subpart A—General Provisions

§ 659.1 Purpose.

This part implements 49 U.S.C. 5330 by requiring a state to oversee the safety and security of rail fixed guideway systems through a designated oversight agency.

§ 659.3 Scope.

This part applies only to states with rail fixed guideway systems, as defined in this part.

§ 659.5 Definitions.

Contractor means an entity that performs tasks required on behalf of the oversight or rail transit agency. The rail transit agency may not be a contractor for the oversight agency.

Corrective action plan means a plan developed by the rail transit agency that describes the actions the rail transit agency will take to minimize, control, correct, or eliminate hazards, and the schedule for implementing those actions.

FRA means the Federal Railroad Administration, an agency within the U.S. Department of Transportation.

FTA means the Federal Transit Administration, an agency within the U.S. Department of Transportation.

Hazard means any real or potential condition (as defined in the rail transit agency's hazard management process) that can cause injury, illness, or death; damage to or loss of a system, equipment or property; or damage to the environment.

Individual means a passenger; employee; contractor; other rail transit facility worker; pedestrian; trespasser; or any person on rail transit-controlled property.

Investigation means the process used to determine the causal and contributing factors of an accident or hazard, so that actions can be identified to prevent recurrence.

New Starts Project means any rail fixed guideway system funded under FTA's 49 U.S.C. 5309 discretionary construction program.

Oversight Agency means the entity, other than the rail transit agency, designated by the state or several states to implement this part.

Passenger means a person who is on board, boarding, or alighting from a rail transit vehicle for the purpose of travel.

Passenger Operations means the period of time when any aspect of rail transit agency operations are initiated with the intent to carry passengers.

Program Standard means a written document developed and adopted by the oversight agency, that describes the policies, objectives, responsibilities, and procedures used to provide rail transit agency safety and security oversight.

Rail Fixed Guideway System means any light, heavy, or rapid rail system, monorail, inclined plane, funicular, trolley, or automated guideway that:

(1) Is not regulated by the Federal Railroad Administration; and

(2) Is included in FTA's calculation of fixed guideway route miles or receives funding under FTA's formula program for urbanized areas (49 U.S.C. 5336); or

(3) Has submitted documentation to FTA indicating its intent to be included in FTA's calculation of fixed guideway route miles to receive funding under FTA's formula program for urbanized areas (49 U.S.C. 5336).

Rail Transit Agency means an entity that operates a rail fixed guideway system.

Rail Transit-Controlled Property means property that is used by the rail transit agency and may be owned, leased, or maintained by the rail transit agency.

Rail Transit Vehicle means the rail transit agency's rolling stock, including but not limited to passenger and maintenance vehicles.

Safety means freedom from harm resulting from unintentional acts or circumstances.

Security means freedom from harm resulting from intentional acts or circumstances.

State means a State of the United States, the District of Columbia, Puerto Rico, the Northern Mariana Islands, Guam, American Samoa, and the Virgin Islands.

System Safety Program Plan means a document developed and adopted by the rail transit agency, describing its safety policies, objectives, responsibilities, and procedures.

System Security Plan means a document developed and adopted by the rail transit agency describing its security policies, objectives, responsibilities, and procedures.

Subpart B—Role of the State

§ 659.7 Withholding of funds for noncompliance.

(a) The Administrator of the FTA may withhold up to five percent of the amount required to be distributed to any state or affected urbanized area in such state under FTA's formula program for urbanized areas, if:

(1) The state in the previous fiscal year has not met the requirements of this part; and

(2) The Administrator determines that the state is not making adequate efforts to comply with this part.

(b) The Administrator may agree to restore withheld formula funds, if compliance is achieved within two years (See 49 U.S.C. 5330).

§ 659.9 Designation of oversight agency.

(a) *General requirement*. Each state with an existing or anticipated rail fixed guideway system regulated by this part shall designate an oversight agency consistent with the provisions of this section. For a rail fixed guideway system that will operate in only one state, the state must designate an agency of the state, other than the rail transit agency, as the oversight agency to implement the requirements in this part. The state's designation or re-designation of its oversight agency and submission of required information as specified in this section, are subject to review by FTA.

(b) *Exception*. States which have designated oversight agencies for purposes of this part before May 31, 2005 are not required to re-designate to FTA.

(c) *Timing*. The state designation of the oversight agency shall:

(1) Coincide with the execution of any grant agreement for a New Starts project between FTA and a rail transit agency within the state's jurisdiction; or

(2) Occur before the application by a rail transit agency for funding under FTA's formula program for urbanized areas (49 U.S.C. 5336).

(d) *Notification to FTA*. Within (60) days of designation of the oversight agency, the state must submit to FTA the following:

(1) The name of the oversight agency designated to implement requirements in this part;

(2) Documentation of the oversight agency's authority to provide state oversight;

(3) Contact information for the representative identified by the designated oversight agency with responsibility for oversight activities;

(4) A description of the organizational and financial relationship between the designated oversight agency and the rail transit agency; and

(5) A schedule for the designated agency's development of its State Safety Oversight Program, including the projected date of its initial submission, as required in § 659.39(a).

(e) *Multiple states.* In cases of a rail fixed guideway system that will operate in more than one state, each affected state must designate an agency of the state, other than the rail transit agency, as the oversight agency to implement the requirements in this part. To fulfill this requirement, the affected states:

(1) May agree to designate one agency of one state, or an agency representative of all states, to implement the requirements in this part; and

(2) In the event multiple states share oversight responsibility for a rail fixed guideway system, the states must ensure that the rail fixed guideway system is subject to a single program standard, adopted by all affected states.

(f) *Change of designation.* Should a state change its designated oversight agency, it shall submit the information required under paragraph (d) of this section to FTA within (30) days of its change. In addition, the new oversight agency must submit a new initial submission, consistent with § 659.39(b), within (30) days of its designation.

§ 659.11 Confidentiality of investigation reports and security plans.

(a) A state may withhold an investigation report that may have been prepared or adopted by the oversight agency from being admitted as evidence or used in a civil action for damages resulting from a matter mentioned in the report.

(b) This part does not require public availability of the rail transit agency's security plan and any referenced procedures.

Subpart C—Role of the State Oversight Agency

§ 659.13 Overview.

The state oversight agency is responsible for establishing standards for rail safety and security practices and procedures to be used by rail transit agencies within its purview. In addition, the state oversight agency must oversee the execution of these practices and procedures, to ensure compliance with the provisions of this part. This subpart identifies and describes the various requirements for the state oversight agency.

§ 659.15 System safety program standard.

(a) *General requirement.* Each state oversight agency shall develop and distribute a program standard. The program standard is a compilation of processes and procedures that governs the conduct of the oversight program at the state oversight agency level, and provides guidance to the regulated rail transit properties concerning processes and procedures they must have in place to be in compliance with the state safety oversight program. The program standard and any referenced program procedures must be submitted to FTA as part of the initial submission. Subsequent revisions and updates must be submitted to FTA as part of the oversight agency's annual submission.

(b) *Contents.* Each oversight agency shall develop a written program standard that meets the requirements specified in this part and includes, at a minimum, the areas identified in this section.

(1) *Program management section.* This section shall include an explanation of the oversight agency's authority, policies, and roles and responsibilities for providing safety and security oversight of the rail transit agencies within its jurisdiction. This section shall provide an overview of planned activities to ensure on-going communication with each affected rail transit agency relating to safety and security information, as well as FTA reporting requirements, including initial, annual and periodic submissions.

(2) *Program standard development section.* This section shall include a description of the oversight agency's process for the development, review, and adoption of the program standard, the modification and/or update of the program standard, and the process by which the program standard and any subsequent revisions are distributed to each affected rail transit agency.

(3) *Oversight of rail transit agency internal safety and security reviews.* This section shall specify the role of the oversight agency in overseeing the rail transit agency internal safety and security review process. This includes a

description of the process used by the oversight agency to receive rail transit agency checklists and procedures and approve the rail transit agency's annual reports on findings, which must be submitted under the signature of the rail transit agency's top management.

(4) *Oversight agency safety and security review section.* This section shall lay out the process and criteria to be used at least every three years in conducting a complete review of each affected rail transit agency's implementation of its system safety program plan and system security plan. This section includes the process to be used by the affected rail transit agency and the oversight agency to manage findings and recommendations from this review. This also includes procedures for notifying the oversight agency before the rail transit agency conducts an internal review.

(5) *Accident notification section.* This section shall include the specific requirements for the rail transit agency to notify the oversight agency of accidents. This section shall also include required timeframes, methods of notification, and the information to be submitted by the rail transit agency. Additional detail on this portion is included in § 659.33 of this part.

(6) *Investigations section.* This section contains the oversight agency identification of the thresholds for incidents that require an oversight agency investigation. The roles and responsibilities for conducting investigations shall include: coordination with the rail transit agency investigation process, the role of the oversight agency in supporting investigations and findings conducted by the NTSB, review and concurrence of investigation report findings, and procedures for protecting the confidentiality of investigation reports.

(7) *Corrective actions section.* This section shall specify oversight agency criteria for the development of corrective action plan(s) and the process for the review and approval of a corrective action plan developed by the rail transit agency. This section shall also identify the oversight agency's policies for the verification and tracking of corrective action plan implementation, and its process for managing conflicts with the rail transit agency relating to investigation findings and corrective action plan development.

(8) *System safety program plan section.* This section shall specify the minimum requirements to be contained in the rail transit agency's system safety program plan. The contents of the system safety plan are discussed in more detail in § 659.19 of this part. This section shall also specify information to be included in the affected rail transit agency's system safety program plan relating to the hazard management process, including requirements for on-going communication and coordination relating to the identification, categorization, resolution, and reporting of hazards to the oversight agency. More details on the hazard management process are contained in § 659.31 of this part. This section shall also describe the process and timeframe through which the oversight agency must receive, review, and approve the rail transit agency system safety program plan.

(9) *System security plan section.* This section shall specify the minimum requirements to be included in the rail transit agency's system security plan. More details about the system security plan are contained in §§ 659.21 through 659.23 of this part. This section shall also describe the process by which the oversight agency will review and approve the rail transit agency system security program plan. This section also shall identify how the state will prevent the system security plan from public disclosure.

§ 659.17 System safety program plan: general requirements.

(a) The oversight agency shall require the rail transit agency to develop and implement a written system safety program plan that complies with requirements in this part and the oversight agency's program standard.

(b) The oversight agency shall review and approve the rail transit agency system safety program plan.

(c) After approval, the oversight agency shall issue a formal letter of approval to the rail transit agency, including the checklist used to conduct the review.

§ 659.19 System safety program plan: contents.

The system safety plan shall include, at a minimum:

(a) A policy statement signed by the agency's chief executive that endorses the safety program and describes the authority that establishes the system safety program plan.

(b) A clear definition of the goals and objectives for the safety program and stated management responsibilities to ensure they are achieved.

(c) An overview of the management structure of the rail transit agency, including:

(1) An organization chart;

(2) A description of how the safety function is integrated into the rest of the rail transit organization; and

(3) Clear identification of the lines of authority used by the rail transit agency to manage safety issues.

(d) The process used to control changes to the system safety program plan, including:

(1) Specifying an annual assessment of whether the system safety program plan should be updated; and

(2) Required coordination with the oversight agency, including timeframes for submission, revision, and approval.

(e) A description of the specific activities required to implement the system safety program, including:

(1) Tasks to be performed by the rail transit safety function, by position and management accountability, specified in matrices and/or narrative format; and

(2) Safety-related tasks to be performed by other rail transit departments, by position and management accountability, specified in matrices and/or narrative format.

(f) A description of the process used by the rail transit agency to implement its hazard management program, including activities for:

(1) Hazard identification;

(2) Hazard investigation, evaluation and analysis;

(3) Hazard control and elimination;

(4) Hazard tracking; and

(5) Requirements for on-going reporting to the oversight agency relating to hazard management activities and status.

(g) A description of the process used by the rail transit agency to ensure that safety concerns are addressed in modifications to existing systems, vehicles, and equipment, which do not require formal safety certification but which may have safety impacts.

(h) A description of the safety certification process required by the rail transit agency to ensure that safety concerns and hazards are adequately addressed prior to the initiation of passenger operations for New Starts and subsequent major projects to extend, rehabilitate, or modify an existing system, or to replace vehicles and equipment.

(i) A description of the process used to collect, maintain, analyze, and distribute safety data, to ensure that the safety function within the rail transit organization receives the necessary information to support implementation of the system safety program.

(j) A description of the process used by the rail transit agency to perform accident notification, investigation and reporting, including:

(1) Notification thresholds for internal and external organizations;

(2) Accident investigation process and references to procedures;

(3) The process used to develop, implement, and track corrective actions that address investigation findings;

(4) Reporting to internal and external organizations; and

(5) Coordination with the oversight agency.

(k) A description of the process used by the rail transit agency to develop an approved, coordinated schedule for all emergency management program activities, which include:

(1) Meetings with external agencies;

(2) Emergency planning responsibilities and requirements;

(3) Process used to evaluate emergency preparedness, such as annual emergency field exercises;

(4) After action reports and implementation of findings;

(5) Revision and distribution of emergency response procedures;

(6) Familiarization training for public safety organizations; and

(7) Employee training.

(l) A description of the process used by the rail transit agency to ensure

that planned and scheduled internal safety reviews are performed to evaluate compliance with the system safety program plan, including:

(1) Identification of departments and functions subject to review;

(2) Responsibility for scheduling reviews;

(3) Process for conducting reviews, including the development of checklists and procedures and the issuing of findings;

(4) Review of reporting requirements;

(5) Tracking the status of implemented recommendations; and

(6) Coordination with the oversight agency.

(m) A description of the process used by the rail transit agency to develop, maintain, and ensure compliance with rules and procedures having a safety impact, including:

(1) Identification of operating and maintenance rules and procedures subject to review;

(2) Techniques used to assess the implementation of operating and maintenance rules and procedures by employees, such as performance testing;

(3) Techniques used to assess the effectiveness of supervision relating to the implementation of operating and maintenance rules; and

(4) Process for documenting results and incorporating them into the hazard management program.

(n) A description of the process used for facilities and equipment safety inspections, including:

(1) Identification of the facilities and equipment subject to regular safety-related inspection and testing;

(2) Techniques used to conduct inspections and testing;

(3) Inspection schedules and procedures; and

(4) Description of how results are entered into the hazard management process.

(o) A description of the maintenance audits and inspections program, including identification of the affected facilities and equipment, maintenance cycles, documentation required, and the process for integrating identified problems into the hazard management process.

(p) A description of the training and certification program for employees and contractors, including:

(1) Categories of safety-related work requiring training and certification;

(2) A description of the training and certification program for employees and contractors in safety-related positions;

(3) Process used to maintain and access employee and contractor training records; and

(4) Process used to assess compliance with training and certification requirements.

(q) A description of the configuration management control process, including:

(1) The authority to make configuration changes;

(2) Process for making changes; and

(3) Assurances necessary for formally notifying all involved departments.

(r) A description of the safety program for employees and contractors that incorporates the applicable local, state, and federal requirements, including:

(1) Safety requirements that employees and contractors must follow when working on, or in close proximity to, rail transit agency property; and

(2) Processes for ensuring the employees and contractors know and follow the requirements.

(s) A description of the hazardous materials program, including the process used to ensure knowledge of and compliance with program requirements.

(t) A description of the drug and alcohol program and the process used to ensure knowledge of and compliance with program requirements.

(u) A description of the measures, controls, and assurances in place to ensure that safety principles, requirements and representatives are included in the rail transit agency's procurement process.

§ 659.21 System security plan: general requirements.

(a) The oversight agency shall require the rail transit agency to implement a system security plan that, at a minimum, complies with requirements in this part and the oversight agency's program standard. The system security

plan must be developed and maintained as a separate document and may not be part of the rail transit agency's system safety program plan.

(b) The oversight agency may prohibit a rail transit agency from publicly disclosing the system security plan.

(c) After approving the system security plan, the oversight agency shall issue a formal letter of approval, including the checklist used to conduct the review, to the rail transit agency.

§ 659.23 System security plan: contents.

The system security plan must, at a minimum address the following:

(a) Identify the policies, goals, and objectives for the security program endorsed by the agency's chief executive.

(b) Document the rail transit agency's process for managing threats and vulnerabilities during operations, and for major projects, extensions, new vehicles and equipment, including integration with the safety certification process;

(c) Identify controls in place that address the personal security of passengers and employees;

(d) Document the rail transit agency's process for conducting internal security reviews to evaluate compliance and measure the effectiveness of the system security plan; and

(e) Document the rail transit agency's process for making its system security plan and accompanying procedures available to the oversight agency for review and approval.

§ 659.25 Annual review of system safety program plan and system security plan.

(a) The oversight agency shall require the rail transit agency to conduct an annual review of its system safety program plan and system security plan.

(b) In the event the rail transit agency's system safety program plan is modified, the rail transit agency must submit the modified plan and any subsequently modified procedures to the oversight agency for review and approval. After the plan is approved, the oversight agency must issue a formal letter of approval to the rail transit agency.

(c) In the event the rail transit agency's system security plan is modified, the rail transit agency must make the modified system security plan and accompanying procedures available to the oversight agency for review, consistent with requirements specified in § 659.23(e) of this part. After the plan is approved, the oversight agency shall issue a formal letter of approval to the rail transit agency.

§ 659.27 Internal safety and security reviews.

(a) The oversight agency shall require the rail transit agency to develop and document a process for the performance of on-going internal safety and security reviews in its system safety program plan.

(b) The internal safety and security review process must, at a minimum:

(1) Describe the process used by the rail transit agency to determine if all identified elements of its system safety program plan and system security plan are performing as intended; and

(2) Ensure that all elements of the system safety program plan and system security plan are reviewed in an on-going manner and completed over a three-year cycle.

(c) The rail transit agency must notify the oversight agency at least thirty (30) days before the conduct of scheduled internal safety and security reviews.

(d) The rail transit agency shall submit to the oversight agency any checklists or procedures it will use during the safety portion of its review.

(e) The rail transit agency shall make available to the oversight agency any checklists or procedures subject to the security portion of its review, consistent with § 659.23(e).

(f) The oversight agency shall require the rail transit agency to annually submit a report documenting internal safety and security review activities and the status of subsequent findings and corrective actions. The security part of this report must be made available for oversight agency review, consistent with § 659.23(e).

(g) The annual report must be accompanied by a formal letter of certification signed by the rail transit agency's chief executive, indicating that the rail transit agency is in compliance with its system safety program plan and system security plan.

(h) If the rail transit agency determines that findings from its internal safety and security reviews indicate that the rail transit agency is not in compliance with its system safety program plan or system security plan, the chief executive must identify the activities the rail transit agency will take to achieve compliance.

(i) The oversight agency must formally review and approve the annual report.

§ 659.29 Oversight agency safety and security reviews.

At least every three (3) years, beginning with the initiation of rail transit agency passenger operations, the oversight agency must conduct an on-site review of the rail transit agency's implementation of its system safety program plan and system security plan. Alternatively, the on-site review may be conducted in an on-going manner over the three year timeframe. At the conclusion of the review cycle, the oversight agency must prepare and issue a report containing findings and recommendations resulting from that review, which, at a minimum, must include an analysis of the effectiveness of the system safety program plan and the security plan and a determination of whether either should be updated.

§ 659.31 Hazard management process.

(a) The oversight agency must require the rail transit agency to develop and document in its system safety program plan a process to identify and resolve hazards during its operation, including any hazards resulting from subsequent system extensions or modifications, operational changes, or other changes within the rail transit environment.

(b) The hazard management process must, at a minimum:

(1) Define the rail transit agency's approach to hazard management and the implementation of an integrated system-wide hazard resolution process;

(2) Specify the sources of, and the mechanisms to support, the on-going identification of hazards;

(3) Define the process by which identified hazards will be evaluated and prioritized for elimination or control;

(4) Identify the mechanism used to track through resolution the identified hazard(s);

(5) Define minimum thresholds for the notification and reporting of hazard(s) to oversight agencies; and

(6) Specify the process by which the rail transit agency will provide on-going reporting of hazard resolution activities to the oversight agency.

§ 659.33 Accident notification.

(a) The oversight agency must require the rail transit agency to notify the oversight agency within two (2) hours of any incident involving a rail transit vehicle or taking place on rail transit-controlled property where one or more of the following occurs:

(1) A fatality at the scene; or where an individual is confirmed dead within thirty (30) days of a rail transit-related incident;

(2) Injuries requiring immediate medical attention away from the scene for two or more individuals;

(3) Property damage to rail transit vehicles, non-rail transit vehicles, other rail transit property or facilities and non-transit property that equals or exceeds $25,000;

(4) An evacuation due to life safety reasons;

(5) A collision at a grade crossing;

(6) A main-line derailment;

(7) A collision with an individual on a rail right of way; or

(8) A collision between a rail transit vehicle and a second rail transit vehicle, or a rail transit non-revenue vehicle.

(b) The oversight agency shall require rail transit agencies that share track with the general railroad system and are subject to the Federal Railroad Administration notification requirements, to notify the oversight agency within two (2) hours of an incident for which the rail transit agency must also notify the Federal Railroad Administration.

(c) The oversight agency shall identify in its program standard the method of notification and the information to be provided by the rail transit agency

§ 659.35 Investigations.

(a) The oversight agency must investigate, or cause to be investigated, at a minimum, any incident involving a rail transit vehicle or taking place on rail transit-controlled property meeting the notification thresholds identified in § 659.33(a).

(b) The oversight agency must use its own investigation procedures or those that have been formally adopted from the rail transit agency and that have been submitted to FTA.

(c) In the event the oversight agency authorizes the rail transit agency to conduct investigations on its behalf, it must do so formally and require the rail transit agency to use investigation procedures that have been formally approved by the oversight agency.

(d) Each investigation must be documented in a final report that includes a description of investigation activities, identified causal and contributing factors, and a corrective action plan.

(e) A final investigation report must be formally adopted by the oversight agency for each accident investigation.

(1) If the oversight agency has conducted the investigation, it must formally transmit its final investigation report to the rail transit agency.

(2) If the oversight agency has authorized an entity other than itself (including the rail transit agency) to conduct the accident investigation on its behalf, the oversight agency must review and formally adopt the final investigation report.

(3) If the oversight agency does not concur with the findings of the rail transit agency investigation report, it must either:

(i) Conduct its own investigation according to paragraphs (b), (d) and (e)(1) of this section; or

(ii) Formally transmit its dissent to the findings of the accident investigation, report its dissent to the rail transit agency, and negotiate with the rail transit agency until a resolution on the findings is reached.

(f) The oversight agency shall have the authority to require periodic status reports that document investigation activities and findings in a time frame determined by the oversight agency.

§ 659.37 Corrective action plans.

(a) The oversight agency must, at a minimum, require the development of a corrective action plan for the following:

(1) Results from investigations, in which identified causal and contributing factors are determined by the rail transit agency or oversight agency as requiring corrective actions; and

(2) Findings from safety and security reviews performed by the oversight agency.

(b) Each corrective action plan should identify the action to be taken by the rail transit agency, an implementation schedule, and the individual or department responsible for the implementation.

(c) The corrective action plan must be reviewed and formally approved by the oversight agency.

(d) The oversight agency must establish a process to resolve disputes between itself and the rail transit agency resulting from the development or enforcement of a corrective action plan.

(e) The oversight agency must identify the process by which findings from an NTSB accident investigation will be evaluated to determine whether or not a corrective action plan should be developed by either the oversight agency or rail transit agency to address NTSB findings.

(f) The rail transit agency must provide the oversight agency:

(1) Verification that the corrective action(s) has been implemented as described in the corrective action plan, or that a proposed alternate action(s) has been implemented subject to oversight agency review and approval; and

(2) Periodic reports requested by the oversight agency, describing the status of each corrective action(s) not completely implemented, as described in the corrective action plan.

(g) The oversight agency must monitor and track the implementation of each approved corrective action plan.

§ 659.39 Oversight agency reporting to the Federal Transit Administration.

(a) *Initial submission.* Each designated oversight agency with a rail fixed guideway system that is in passenger operations as of April 29, 2005 or will begin passenger operations by May 1, 2006, must make its initial submission to FTA by May 1, 2006. In states with rail fixed guideway systems initiating passenger operations after May 1, 2006, the designated oversight agency must make its initial submission within the time frame specified by the state in its designation submission, but not later than at least sixty (60) days prior to initiation of passenger operations. Any time a state changes its designated oversight agency to carry out the requirements identified in this part, the new oversight agency must make a new initial submission to FTA within thirty (30) days of the designation.

(b) An initial submission must include the following:

(1) Oversight agency program standard and referenced procedures; and

(2) Certification that the system safety program plan and the system security plan have been developed, reviewed, and approved.

(c) *Annual submission.* Before March 15 of each year, the oversight agency must submit the following to FTA:

(1) A publicly available annual report summarizing its oversight activities for the preceding twelve months, including a description of the causal factors of investigated accidents, status of corrective actions, updates and modifications to rail transit agency program documentation, and the level of effort used by the oversight agency to carry out its oversight activities.

(2) A report documenting and tracking findings from three-year safety review activities, and whether a three-year safety review has been completed since the last annual report was submitted.

(3) Program standard and supporting procedures that have changed during the preceding year.

(4) Certification that any changes or modifications to the rail transit agency system safety program plan or system security plan have been reviewed and approved by the oversight agency.

(d) *Periodic submission.* FTA retains the authority to periodically request program information.

(e) *Electronic reporting.* All submissions to FTA required in this part must be submitted electronically using a reporting system specified by FTA.

§ 659.41 Conflict of interest.

The oversight agency shall prohibit a party or entity from providing services to both the oversight agency and rail transit agency when there is a conflict of interest, as defined by the state.

§ 659.43 Certification of compliance.

(a) Annually, the oversight agency must certify to the FTA that it has complied with the requirements of this part.

(b) The oversight agency must submit each certification electronically to FTA using a reporting system specified by FTA.

(c) The oversight agency must maintain a signed copy of each annual certification to FTA, subject to audit by FTA.

PART 661—BUY AMERICA REQUIREMENTS

Sec.

661.1 Applicability.
661.3 Definitions.
661.5 General requirements.
661.6 Certification requirements for procurement of steel or manufactured products.
661.7 Waivers.
661.9 Application for waivers.
661.11 Rolling stock procurements.
661.12 Certification requirement for procurement of buses, other rolling stock and associated equipment.
661.13 Grantee responsibility.
661.15 Investigation procedures.
661.17 Failure to comply with certification.
661.18 Intentional violations.
661.19 Sanctions.
661.20 Rights of parties.
661.21 State Buy America provisions.

AUTHORITY: 49 U.S.C. 5323(j) (formerly sec. 165 of the Surface Transportation Assistance Act of 1982 (Pub. L. 97–424); as amended by sec. 337, Pub. L. 100–17; sec. 1048, Pub. L. 102–240; sec. 3020(b), Pub. L. 105–178; and sec. 3023(i) and (k), Pub. L. 109–59); 49 CFR 1.51.

SOURCE: 56 FR 932, Jan. 9, 1991, unless otherwise noted.

§ 661.1 Applicability.

Unless otherwise noted, this part applies to all federally assisted procurements using funds authorized by 49 U.S.C. 5323(j); 23 U.S.C. 103(e)(4); and section 14 of the National Capital Transportation Act of 1969, as amended.

[56 FR 932, Jan. 9, 1991, as amended at 72 FR 53696, Sept. 20, 2007]

§ 661.3 Definitions.

As used in this part:

Act means the Federal Public Transportation Law (49 U.S.C. Chapter 53).

Administrator means the Administrator of FTA, or designee.

Component means any article, material, or supply, whether manufactured or unmanufactured, that is directly incorporated into the end product at the final assembly location.

Contractor means a party to a third party contract other than the grantee.

End product means any vehicle, structure, product, article, material, supply, or system, which directly incorporates constituent components at the final assembly location, that is acquired for public use under a federally-funded third-party contract, and which is ready to provide its intended end function or use without any further manufacturing or assembly change(s). A list of representative end products is included at Appendix A to this section.

FTA means the Federal Transit Administration.

Grantee means any entity that is a recipient of FTA funds.

Manufactured product means an item produced as a result of the manufacturing process.

Manufacturing process means the application of processes to alter the form or function of materials or of elements of the product in a manner adding value and transforming those materials or elements so that they represent a new end product functionally different from that which would result from mere assembly of the elements or materials.

Negotiated procurement means a contract awarded using other than sealed bidding procedures.

Rolling stock means transit vehicles such as buses, vans, cars, railcars, locomotives, trolley cars and buses, and ferry boats, as well as vehicles used for support services.

System means a machine, product, or device, or a combination of such equipment, consisting of individual components, whether separate or interconnected by piping, transmission devices, electrical cables or circuitry, or by other devices, which are intended to contribute together to a clearly defined function. Factors to consider in determining whether a system constitutes an end product include: Whether performance warranties apply to an integrated system (regardless of whether components are separately warranteed); whether products perform on an integrated basis with other products in a system, or are operated independently of associated products in the system; or whether transit agencies routinely procure a product separately (other than as replacement or spare parts).

United States means the several States, the Commonwealth of Puerto Rico, the District of Columbia, Guam, American Samoa, the U.S. Virgin Islands, and the Commonwealth of the Northern Mariana Islands.

APPENDIX A TO § 661.3—END PRODUCTS

The following is a list of representative end products that are subject to the requirements of Buy America. This list is representative, not exhaustive.

(1) *Rolling stock end products:* All individual items identified as rolling stock in § 661.3 (*e.g.*, buses, vans, cars, railcars, locomotives, trolley cars and buses, ferry boats, as well as vehicles used for support services); train control, communication, and traction power equipment that meets the definition of end product at § 661.3 (*e.g.*, a communication or traction power system, including manufactured bimetallic power rail).

(2) *Steel and iron end products:* Items made primarily of steel or iron such as structures, bridges, and track work, including running rail, contact rail, and turnouts.

(3) *Manufactured end products:* Infrastructure projects not made primarily of steel or iron, including structures (terminals, depots, garages, and bus shelters), ties and ballast; contact rail not made primarily of steel or iron; fare collection systems; computers; information systems; security systems; data processing systems; and mobile lifts, hoists, and elevators.

[72 FR 53696, Sept. 20, 2007, as amended at 74 FR 30239, June 25, 2009]

§ 661.5 General requirements.

(a) Except as provided in § 661.7 and § 661.11 of this part, no funds may be obligated by FTA for a grantee project unless all iron, steel, and manufactured products used in the project are produced in the United States.

(b) All steel and iron manufacturing processes must take place in the United States, except metallurgical processes involving refinement of steel additives.

(c) The steel and iron requirements apply to all construction materials made primarily of steel or iron and used in infrastructure projects such as transit or maintenance facilities, rail lines, and bridges. These items include, but are not limited to, structural steel or iron, steel or iron beams and columns, running rail and contact rail. These requirements do not apply to steel or iron used as components or subcomponents of other manufactured products or rolling stock, or to bimetallic power rail incorporating steel or iron components.

(d) For a manufactured product to be considered produced in the United States:

(1) All of the manufacturing processes for the product must take place in the United States; and

(2) All of the components of the product must be of U.S. origin. A component is considered of U.S. origin if it is manufactured in the United States, regardless of the origin of its subcomponents.

[61 FR 6302, Feb. 16, 1996, as amended at 74 FR 30239, June 25, 2009]

§ 661.6 Certification requirements for procurement of steel or manufactured products.

If steel, iron, or manufactured products (as defined in §§ 661.3 and 661.5 of this part) are being procured, the appropriate certificate as set forth below shall be completed and submitted by each bidder or offeror in accordance with the requirement contained in § 661.13(b) of this part.

Certificate of Compliance with Buy America Requirements

The bidder or offeror hereby certifies that it will comply with the requirements of 49 U.S.C. 5323(j)(1), and the applicable regulations in 49 CFR part 661.

Date _____
Signature _____
Company _____
Name _____
Title _____

Certificate of Non-Compliance with Buy America Requirements

The bidder or offeror hereby certifies that it cannot comply with the requirements of 49 U.S.C. 5323(j), but it may qualify for an exception to the requirement pursuant to 49 U.S.C. 5323(j)(2), as amended, and the applicable regulations in 49 CFR 661.7.

Date _____
Signature _____
Company _____
Name _____
Title _____

[71 FR 14117, Mar. 21, 2006, as amended at 72 FR 53696, Sept. 20, 2007]

§ 661.7 Waivers.

(a) Section 5323(j)(2) of Title 49 United States Code provides that the general requirements of 49 U.S.C. 5323(j)(1) shall not apply in four specific instances. This section sets out the conditions for the three statutory waivers based on public interest, non-availability, and price-differential. Section 661.11 of this part sets out the conditions for the fourth statutory waiver governing the procurement of rolling stock and associated equipment.

(b) Under the provision of 49 U.S.C. 5323(j)(2)(A), the Administrator may waive the general requirements of 49 U.S.C. 5323(j)(1) if the Administrator finds that their application would be inconsistent with the public interest. In determining whether the conditions exist to grant this public interest waiver, the Administrator will consider all appropriate factors on a case-by-case basis, unless a general exception is specifically set out in this part. When granting a public interest waiver, the Administrator shall issue a detailed written statement justifying why the waiver is in the public interest. The Administrator shall publish this justification in the FEDERAL REGISTER, providing the public with a reasonable

time for notice and comment of not more than seven calendar days.

(c) Under the provision of 49 U.S.C. 5323(j)(2), the Administrator may waive the general requirements of 49 U.S.C. 5323(j) if the Administrator finds that the materials for which a waiver is requested are not produced in the United States in sufficient and reasonably available quantities and of a satisfactory quality.

(1) It will be presumed that the conditions exist to grant this non-availability waiver if no responsive and responsible bid is received offering an item produced in the United States.

(2) In the case of a sole source procurement, the Administrator will grant this non-availability waiver only if the grantee provides sufficient information which indicates that the item to be procured is only available from a single source or that the item to be procured is not produced in sufficient and reasonably available quantities of a satisfactory quality in the United States.

(3) After contract award, the Administrator may grant a non-availability waiver under this paragraph, in any case in which a bidder or offeror originally certified compliance with the Buy America requirements in good faith, but can no longer comply with its certification. The Administrator will grant a non-availability waiver only if the grantee provides sufficient evidence that the original certification was made in good faith and that the item to be procured cannot now be obtained domestically due to commercial impossibility or impracticability. In determining whether the conditions exist to grant a post-award non-availability waiver, the Administrator will consider all appropriate factors on a case-by-case basis.

(d) Under the provision of section 165(b)(4) of the Act, the Administrator may waive the general requirements of section 165(a) if the Administrator finds that the inclusion of a domestic item or domestic material will increase the cost of the contract between the grantee and its supplier of that item or material by more than 25 percent. The Administrator will grant this price-differential waiver if the amount of the lowest responsive and responsible bid offering the item or material that is not produced in the United States multiplied by 1.25 is less than the amount of the lowest responsive and responsible bid offering the item or material produced in the United States.

(e) The four statutory waivers of 49 U.S.C. 5323(j)(2) as set out in this part shall be treated as being separate and distinct from each other.

(f) The waivers described in paragraphs (b) and (c) of this section may be granted for a component or subcomponent in the case of the procurement of the items governed by 49 U.S.C. 5323(j)(2)(C) (requirements for rolling stock). If a waiver is granted for a component or a subcomponent, that component or subcomponent will be considered to be of domestic origin for the purposes of § 661.11 of this part.

(g) The waivers described in paragraphs (b) and (c) of this section may be granted for a specific item or material that is used in the production of a manufactured product that is governed by the requirements of § 661.5(d) of this part. If such a waiver is granted to such a specific item or material, that item or material will be treated as being of domestic origin.

(h) The provisions of this section shall not apply to products produced in a foreign country if the Secretary, in consultation with the United States Trade Representative, determines that:

(1) That foreign country is party to an agreement with the United States pursuant to which the head of an agency of the United States has waived the requirements of this section; and

(2) That foreign country has violated the terms of the agreement by discriminating against products covered by this section that are produced in the United States and are covered by the agreement.

APPENDIX A TO § 661.7—GENERAL WAIVERS

(a) All waivers published in 48 CFR 25.104 which establish excepted articles, materials, and supplies for the Buy American Act of 1933 (41 U.S.C. 10a–d), as the waivers may be amended from time to time, apply to this part under the provisions of § 661.7 (b) and (c).

(b) Under the provisions of § 661.7 (b) and (c) of this part, a general public interest waiver from the Buy America requirements applies to microprocessors, computers, microcomputers, or software, or other such devices, which are used solely for the purpose of processing or storing data. This general

waiver does not extend to a product or device which merely contains a microprocessor or microcomputer and is not used solely for the purpose of processing or storing data.

(c) Under the provisions of § 661.7(b) of this part, a general public interest waiver from the Buy America requirements for ''small purchases'' (as defined in the ''common grant rule,'' at 49 CFR 18.36(d)) made by FTA grantees with capital, planning, or operating assistance.

[56 FR 932, Jan. 9, 1991, as amended at 60 FR 37928, July 24, 1995, 61 FR 6302, Feb. 16, 1996; 71 FR 14117, Mar. 21, 2006; 72 FR 53697, Sept. 20, 2007; 74 FR 30239, June 25, 2009]

§ 661.9 Application for waivers.

(a) This section sets out the application procedures for obtaining all waivers, except those general exceptions set forth in this part for which individual applications are unnecessary and those covered by 49 U.S.C. 5323(j)(2)(C). The procedures for obtaining an exception covered by 49 U.S.C. 5323(j)(2)(C) are set forth in § 661.11 of this part.

(b) A bidder or offeror who seeks to establish grounds for an exception must seek the exception, in a timely manner, through the grantee.

(c) Except as provided in paragraph (d) of this section, only a grantee may request a waiver. The request must be in writing, include facts and justification to support the waiver, and be submitted to the Administrator through the appropriate Regional Office.

(d) FTA will consider a request for a waiver from a potential bidder, offeror, or supplier only if the waiver is being sought under § 661.7 (f) or (g) of this part.

(e) The Administrator will issue a written determination setting forth the reasons for granting or denying the exception request. Each request for an exception, and FTA's action on the request, are available for public inspection under the provisions of 49 CFR part 601, subpart C.

[56 FR 932, Jan. 9, 1991, as amended at 71 FR 14117, Mar. 21, 2006; 72 FR 53697, Sept. 20, 2007]

§ 661.11 Rolling stock procurements.

(a) The provisions of § 661.5 do not apply to the procurement of buses and other rolling stock (including train control, communication, and traction power equipment), if the cost of components produced in the United States is more than 60 percent of the cost of all components and final assembly takes place in the United States.

(b) The domestic content requirements in paragraph (a) of this section also apply to the domestic content requirements for components set forth in paragraphs (i), (j), and (l) of this section.

(c) A component is any article, material, or supply, whether manufactured or unmanufactured, that is directly incorporated into an end product at the final assembly location.

(d) A component may be manufactured at the final assembly location if the manufacturing process to produce the component is an activity separate and distinct from the final assembly of the end product.

(e) A component is considered to be manufactured if there are sufficient activities taking place to advance the value or improve the condition of the subcomponents of that component; that is, if the subcomponents have been substantially transformed or merged into a new and functionally different article.

(f) Except as provided in paragraph (k) of this section, a subcomponent is any article, material, or supply, whether manufactured or unmanufactured, that is one step removed from a component (as defined in paragraph (c) of this section) in the manufacturing process and that is incorporated directly into a component.

(g) For a component to be of domestic origin, more that 60 percent of the subcomponents of that component, by cost, must be of domestic origin, and the manufacture of the component must take place in the United States. If, under the terms of this part, a component is determined to be of domestic origin, its entire cost may be used in calculating the cost of domestic content of an end product.

(h) A subcomponent is of domestic origin if it is manufactured in the United States.

(i) If a subcomponent manufactured in the United States is exported for inclusion in a component that is manufactured outside the United States and it receives tariff exemptions under the procedures set forth in 19 CFR 10.11

through 10.24, the subcomponent retains its domestic identity and can be included in the calculation of the domestic content of an end product even if such a subcomponent represents less than 60 percent of the cost of a particular component.

(j) If a subcomponent manufactured in the United States is exported for inclusion in a component manufactured outside the United States and it does not receive tariff exemption under the procedures set forth in 19 CFR 10.11 through 10.24, the subcomponent loses its domestic identity and cannot be included in the calculation of the domestic content of an end product.

(k) Raw materials produced in the United States and then exported for incorporation into a component are not considered to be a subcomponent for the purpose of calculating domestic content. The value of such raw materials is to be included in the cost of the foreign component.

(l) If a component is manufactured in the United States, but contains less than 60 percent domestic subcomponents, by cost, the cost of the domestic subcomponents and the cost of manufacturing the component may be included in the calculation of the domestic content of the end product.

(m) For purposes of this section, except as provided in paragraph (o) of this section:

(1) The cost of a component or a subcomponent is the price that a bidder or offeror must pay to a subcontractor or supplier for that component or subcomponent. Transportation costs to the final assembly location must be included in calculating the cost of foreign components and subcomponents.

(2) If a component or subcomponent is manufactured by the bidder or offeror, the cost of the component is the cost of labor and materials incorporated into the component or subcomponent, an allowance for profit, and the administrative and overhead costs attributable to that component or subcomponent under normal accounting principles.

(n) The cost of a component of foreign origin is set using the foreign exchange rate at the time the bidder or offeror executes the appropriate Buy America certificate.

(o) The cost of a subcomponent that retains its domestic identity consistent with paragraph (j) of this section shall be the cost of the subcomponent when last purchased, f.o.b. United States port of exportation or point of border crossing as set out in the invoice and entry papers or, if no purchase was made, the value of the subcomponent at the time of its shipment for exportation, f.o.b. United States port of exportation or point of border crossing as set out in the invoice and entry papers.

(p) In accordance with 49 U.S.C. 5323(j), labor costs involved in final assembly shall not be included in calculating component costs.

(q) The actual cost, not the bid price, of a component is to be considered in calculating domestic content.

(r) Final assembly is the creation of the end product from individual elements brought together for that purpose through application of manufacturing processes. If a system is being procured as the end product by the grantee, the installation of the system qualifies as final assembly.

(s) [Reserved]

(t) Train control equipment includes, but is not limited to, the following equipment:

(1) Mimic board in central control
(2) Dispatcher's console
(3) Local control panels
(4) Station (way side) block control relay cabinets
(5) Terminal dispatcher machines
(6) Cable/cable trays
(7) Switch machines
(8) Way side signals
(9) Impedance bonds
(10) Relay rack bungalows
(11) Central computer control
(12) Brake equipment
(13) Brake systems
(14) Cab Signaling;
(15) ATO Equipment;
(16) ATP Equipment;
(17) Wayside Transponders;
(18) Trip Stop Equipment;
(19) Wayside Magnets;
(20) Speed Measuring Devices;
(21) Car Axle Counters;
(22) Communication Based Train Control (CBTC).

(u) Communication equipment includes, but is not limited to, the following equipment:

(1) Radios
(2) Space station transmitter and receivers
(3) Vehicular and hand-held radios
(4) PABX telephone switching equipment
(5) PABX telephone instruments
(6) Public address amplifiers
(7) Public address speakers
(8) Cable transmission system cable
(9) Cable transmission system multiplex equipment
(10) Communication console at central control
(11) Uninterruptible power supply inverters/rectifiers
(12) Uninterruptible power supply batteries
(13) Data transmission system central processors
(14) Data transmission system remote terminals
(15) Line printers for data transmission system
(16) Communication system monitor test panel
(17) Security console at central control
(18) Antennas;
(19) Wireless Telemetry Equipment;
(20) Passenger Information Displays;
(21) Communications Control Units;
(22) Communication Control Heads;
(23) Wireless Intercar Transceivers;
(24) Multiplexers;
(25) SCADA Systems;
(26) LED Arrays;
(27) Screen Displays such as LEDs and LCDs for communication systems;
(28) Fiber-optic transmission equipment;
(29) Fiber-optic transmission equipment;
(30) Frame or cell based multiplexing equipment; 13) Communication system network elements.

(v) Traction power equipment includes, but is not limited to the following:
(1) Primary AC switch gear
(2) Primary AC transformer rectifiers
(3) DC switch gear
(4) Traction power console and CRT display system at central control
(5) Bus ducts with buses (AC and DC)
(6) Batteries
(7) Traction power rectifier assemblies
(8) Distribution panels (AC and DC)
(9) Facility step-down transformers
(10) Motor control centers (facility use only)
(11) Battery chargers
(12) Supervisory control panel
(13) Annunciator panels
(14) Low voltage facility distribution switch board
(15) DC connect switches
(16) Negative bus boxes
(17) Power rail insulators
(18) Power cables (AC and DC)
(19) Cable trays
(20) Instrumentation for traction power equipment
(21) Connectors, tensioners, and insulators for overhead power wire systems
(22) Negative drainage boards
(23) Inverters
(24) Traction motors
(25) Propulsion gear boxes
(26) Third rail pick-up equipment
(27) Pantographs
(28) Propulsion Control Systems;
(29) Surge Arrestors;
(30) Protective Relaying.
(31) Bimetallic power rail.

(w) The power or third rail is not considered traction power equipment and is thus subject to the requirements of 49 U.S.C. 5323(j) and the requirements of § 661.5.

(x) A bidder on a contract for an item covered by 49 U.S.C. 5323(j) who will comply with section 165(b)(3) and regulations in this section is not required to follow the application for waiver procedures set out in § 661.9. In lieu of these procedures, the bidder must submit the appropriate certificate required by § 661.12.

APPENDIX A TO § 661.11—GENERAL WAIVERS

(a) The provisions of § 661.11 of this part do not apply when foreign sourced spare parts for buses and other rolling stock (including train control, communication, and traction power equipment) whose total cost is 10 percent or less of the overall project contract cost are being procured as part of the same contract for the major capital item.

(b) [Reserved]

APPENDIX B TO § 661.11—TYPICAL COMPONENTS OF BUSES

The following is a list of items that typically would be considered components of a bus. This list is not all-inclusive.

Car body shells, egines, transmissions, front axle assemblies, rear axle assemblies,

drive shaft assemblies, front suspension assemblies, rear suspension assemblies, air compressor and pneumatic systems, generator/alternator and electrical systems, steering system assemblies, front and rear air brake assemblies, air conditioning compressor assemblies, air conditioning evaporator/condenser assemblies, heating systems. passenger seats, driver's seat assemblies, window assemblies, entrance and exit door assemblies, door control systems, destination sign assemblies, interior lighting assemblies, front and rear end cap assemblies, front and rear bumper assemblies, specialty steel (structural steel tubing, etc.) aluminum extrusions, aluminum, steel or fiberglass exterior panels, and interior trim, flooring, and floor coverings.

APPENDIX C TO § 661.11—TYPICAL COMPONENTS OF RAIL ROLLING STOCK

The following is a list of items that typically would be considered components of rail rolling stock. This list is not all inclusive.

Car shells, engines, main transformer, pantographs, traction motors, propulsion gear boxes, interior linings, acceleration and braking resistors, propulsion controls, low voltage auxiliary power supplies, air conditioning equipment, air brake compressors, brake controls, foundation brake equipment, articulation assemblies, train control systems, window assemblies, communication equipment, lighting, seating, doors, door actuators and controls, wheelchair lifts and ramps to make the vehicle accessible to persons with disabilities, couplers and draft gear, trucks, journal bearings, axles, diagnostic equipment, and third rail pick-up equipment.

APPENDIX D TO § 661.11—MINIMUM REQUIREMENTS FOR FINAL ASSEMBLY

(a) Rail Cars: In the case of the manufacture of a new rail car, final assembly would typically include, as a minimum, the following operations: installation and interconnection of propulsion control equipment, propulsion cooling equipment, brake equipment, energy sources for auxiliaries and controls, heating and air conditioning, communications equipment, motors, wheels and axles, suspensions and frames; the inspection and verification of all installation and interconnection work; and the in-plant testing of the stationary product to verify all functions.

(b) Buses: In the case of a new bus, final assembly would typically include, at a minimum, the installation and interconnection of the engine, transmission, axles, including the cooling and braking systems; the installation and interconnection of the heating and air conditioning equipment; the installation of pneumatic and electrical systems, door systems, passenger seats, passenger grab rails, destination signs, wheelchair lifts; and road testing, final inspection, repairs and preparation of the vehicles for delivery.

(c) If a manufacturer's final assembly processes do not include all the activities that are typically considered the minimum requirements, it can request a Federal Transit Administration (FTA) determination of compliance. FTA will review these requests on a case-by-case basis to determine compliance with Buy America.

[61 FR 6302, Feb. 16, 1996, as amended at 62 FR 40954, July 31, 1997; 72 FR 53697, Sept. 20, 2007; 72 FR 55103, Sept. 28, 2007; 74 FR 30239, June 25, 2009]

§ 661.12 Certification requirement for procurement of buses, other rolling stock and associated equipment.

If buses or other rolling stock (including train control, communication, and traction power equipment) are being procured, the appropriate certificate as set forth below shall be completed and submitted by each bidder in accordance with the requirement contained in § 661.13(b) of this part.

Certificate of Compliance with Buy America Rolling Stock Requirements

The bidder or offeror hereby certifies that it will comply with the requirements of 49 U.S.C. 5323(j), and the applicable regulations of 49 CFR 661.11.

Date _____
Signature _____
Company _____
Name _____
Title _____

Certificate of Non-Compliance with Buy America Rolling Stock Requirements

The bidder or offeror hereby certifies that it cannot comply with the requirements of 49 U.S.C. 5323(j), but may qualify for an exception to the requirement consistent with 49 U.S.C. 5323(j)(2)(C), and the applicable regulations in 49 CFR 661.7.

Date _____
Signature _____
Company _____
Name _____
Title _____

[71 FR 14117, Mar. 21, 2006, as amended at 72 FR 53698, Sept. 20, 2007; 74 FR 30239, June 25, 2009]

§ 661.13 Grantee responsibility.

(a) The grantee shall adhere to the Buy America clause set forth in its grant contract with FTA.

(b) The grantee shall include in its bid or request for proposal (RFP) specification for procurement within the scope of this part an appropriate notice of the Buy America provision. Such specifications shall require, as a condition of responsiveness, that the bidder or offeror submit with the bid or offer a completed Buy America certificate in accordance with §§ 661.6 or 661.12 of this part, as appropriate.

(1) A bidder or offeror who has submitted an incomplete Buy America certificate or an incorrect certificate of noncompliance through inadvertent or clerical error (but not including failure to sign the certificate, submission of certificates of both compliance and non-compliance, or failure to submit any certification), may submit to the FTA Chief Counsel within ten (10) days of bid opening of submission or a final offer, a written explanation of the circumstances surrounding the submission of the incomplete or incorrect certification in accordance with 28 U.S.C. 1746, sworn under penalty of perjury, stating that the submission resulted from inadvertent or clerical error. The bidder or offeror will also submit evidence of intent, such as information about the origin of the product, invoices, or other working documents. The bidder or offeror will simultaneously send a copy of this information to the FTA grantee.

(i) The FTA Chief Counsel may request additional information from the bidder or offeror, if necessary. The grantee may not make a contract award until the FTA Chief Counsel issues his/her determination, except as provided in § 661.15(m).

(ii) [Reserved]

(2) For negotiated procurements, compliance with the Buy America requirements shall be determined on the basis of the certification submitted with the final offer or final revised proposal. However, where a grantee awards on the basis of initial proposals without discussion, the certification submitted with the initial proposal shall control.

(3) Certification based on ignorance of the proper application of the Buy America requirements is not an inadvertent or clerical error.

(c) Whether or not a bidder or offeror certifies that it will comply with the applicable requirement, such bidder or offeror is bound by its original certification (in the case of a sealed bidding procurement) or its certification submitted with its final offer (in the case of a negotiated procurement) and is not permitted to change its certification after bid opening or submission of a final offer. Where a bidder or offeror certifies that it will comply with the applicable Buy America requirements, the bidder, offeror, or grantee is not eligible for a waiver of those requirements.

[56 FR 932, Jan. 9, 1991, as amended at 68 FR 9799, Feb. 28, 2003; 71 FR 14117, Mar. 21, 2006]

§ 661.15 Investigation procedures.

(a) It is presumed that a bidder or offeror who has submitted the required Buy America certificate is complying with the Buy America provision. A false certification is a criminal act in violation of 18 U.S.C. 1001.

(b) Any party may petition FTA to investigate the compliance of a successful bidder or offeror with the bidder's or offeror's certification. That party (''the petitioner'') must include in the petition a statement of the grounds of the petition and any supporting documentation. If FTA determines that the information presented in the petition indicates that the presumption in paragraph (a) of this section has been overcome, FTA will initiate an investigation.

(c) In appropriate circumstances, FTA may determine on its own to initiate an investigation without receiving a petition from a third party.

(d) When FTA determines under paragraph (b) or (c) of this section to conduct an investigation, it requests that the grantee require the successful bidder or offeror to document its compliance with its Buy America certificate. The successful bidder or offeror has the burden of proof to establish that it is in compliance. Documentation of compliance is based on the specific circumstances of each investigation, and

FTA will specify the documentation required in each case.

(e) The grantee shall reply to the request under paragraph (d) of this section within 15 working days of the request. The investigated party may correspond directly with FTA during the course of investigation, if it informs the grantee that it intends to do so, and if the grantee agrees to such action in writing. The grantee must inform FTA, in writing, that the investigated party will respond directly to FTA. An investigated party may provide confidential or proprietary information (see paragraph (l) of this section) directly to FTA while providing other information required to be submitted as part of the investigation through the grantee.

(f) Any additional information requested or required by FTA must be submitted within 5 working days after the receipt of such request unless specifically exempted by FTA.

(g) The grantee's reply (or that of the bidder or offeror) will be transmitted to the petitioner. The petitioner may submit comments on the reply to FTA within 10 working days after receipt of the reply. The grantee and the low bidder or offeror will be furnished with a copy of the petitioner's comments, and their comments must be received by FTA within 5 working days after receipt of the petitioner's comments.

(h) The failure of a party to comply with the time limits stated in this section may result in resolution of the investigation without consideration of untimely filed comments.

(i) During the course of an investigation, with appropriate notification to affected parties, FTA may conduct site visits of manufacturing facilities and final assembly locations as it considers appropriate.

(j) FTA will, upon request, make available to any interested party information bearing on the substance of the investigation which has been submitted by the petitioner, interested parties or grantees, except to the extent that withholding of information is permitted or required by law or regulation.

(k) If a party submitting information considers that the information submitted contains proprietary material which should be withheld, a statement advising FTA of this fact may be included, and the alleged proprietary information must be identified wherever it appears. Any comments on the information provided shall be submitted within a maximum of ten days.

(l) For purposes of paragraph (j) of this section, confidential or proprietary material is any material or data whose disclosure could reasonably be expected to cause substantial competitive harm to the party claiming that the material is confidential or proprietary.

(m) When a petition for investigation has been filed before award, the grantee will not make an award before the resolution of the investigation, unless the grantee determines that:

(1) The items to be procured are urgently required;

(2) Delivery of performance will be unduly delayed by failure to make the award promptly; or

(3) Failure to make prompt award will otherwise cause undue harm to the grantee or the Federal Government.

(n) In the event that the grantee determines that the award is to be made during the pendency of an investigation, the grantee will notify FTA before to making such award. FTA reserves the right not to participate in the funding of any contract awarded during the pendency of an investigation.

(o) Initial decisions by FTA will be in written form. Reconsideration of an initial decision of FTA may be requested by any party involved in an investigation. FTA will only reconsider a decision only if the party requesting reconsideration submits new matters of fact or points of law that were not known or available to the party during the investigation. A request for reconsideration of a decision of FTA shall be filed not later than ten (10) working days after the initial written decision. A request for reconsideration will be subject to the procedures in this section consistent with the need for prompt resolution of the matter.

[56 FR 932, Jan. 9, 1991, as amended at 71 FR 14118, Mar. 21, 2006]

§ 661.17 Failure to comply with certification.

If a successful bidder or offeror fails to demonstrate that it is in compliance with its certification, it will be required to take the necessary steps in order to achieve compliance. If a bidder or offeror takes these necessary steps, it will not be allowed to change its original bid price or the price of its final offer. If a bidder or offeror does not take the necessary steps, it will not be awarded the contract if the contract has not yet been awarded, and it is in breach of contract if a contract has been awarded.

[71 FR 14118, Mar. 21, 2006]

§ 661.18 Intentional violations.

A person shall be ineligible to receive any contract or subcontract made with funds authorized under the Federal Public Transportation Act of 2005 pursuant to part 29 of this title if it has been determined by a court or Federal agency that the person intentionally—

(a) Affixed a label bearing a ''Made in America'' inscription, or an inscription with the same meaning, to a product not made in the United States, but sold in or shipped to the United States and used in projects to which this section applies, or

(b) Otherwise represented that any such product was produced in the United States.

[61 FR 6303, Feb. 16, 1996, as amended at 72 FR 53698, Sept. 20, 2007]

§ 661.19 Sanctions.

A willful refusal to comply with a certification by a successful bidder or offeror may lead to the initiation of debarment or suspension proceedings under part 29 of this title.

[71 FR 14118, Mar. 21, 2006]

§ 661.20 Rights of parties.

(a) A party adversely affected by an FTA action under this subsection shall have the right to seek review under the Administrative Procedure Act (APA), 5 U.S.C. 702 *et seq*.

(b) Except as provided in paragraph (a) of this section, the sole right of any third party under the Buy America provision is to petition FTA under the provisions of § 661.15 of this part. No third party has any additional right, at law or equity, for any remedy including, but not limited to, injunctions, damages, or cancellation of the Federal grant or contracts of the grantee.

[71 FR 14118, Mar. 21, 2006]

§ 661.21 State Buy America provisions.

(a) Except as provided in paragraph (b) of this section, any State may impose more stringent Buy America or buy national requirements than contained in section 165 of the Act and the regulations in this part.

(b) FTA will not participate in contracts governed by the following:

(1) State Buy America or Buy National preference provisions which are not as strict as the Federal requirements.

(2) State and local Buy National or Buy America preference provisions which are not explicitly set out under State law. For example, administrative interpretations of non-specific State legislation will not control.

(3) State and local Buy Local preference provisions.

PART 663—PRE-AWARD AND POST-DELIVERY AUDITS OF ROLLING STOCK PURCHASES

Subpart A—General

Sec.
663.1 Purpose.
663.3 Scope.
663.5 Definitions.
663.7 Certification of compliance to FTA.
663.9 Audit limitations.
663.11 Audit financing.
663.13 Buy America requirements.
663.15 Compliance.

Subpart B—Pre-Award Audits

663.21 Pre-award audit requirements.
663.23 Description of pre-award audit.
663.25 Pre-award Buy America certification.
663.27 Pre-award purchaser's requirements certification.

Subpart C—Post-Delivery Audits

663.31 Post-delivery audit requirements.
663.33 Description of post-delivery audit.
663.35 Post-delivery Buy America certification.
663.37 Post-delivery purchaser's requirements certification.

663.39 Post-delivery audit review.

Subpart D—Certification of Compliance With or Inapplicability of Federal Motor Vehicle Safety Standards

663.41 Certification of compliance with Federal motor vehicle safety standards.
663.43 Certification that Federal motor vehicle standards do not apply.

AUTHORITY: 49 U.S.C. 1608(j); 23 U.S.C. 103(e)(f); Pub. L. 96–184, 93 Stat. 1320; Pub. L. 101–551, 104 Stat. 2733; sec. 3023(m), Pub. L. 109–59; 49 CFR 1.51.

SOURCE: 56 FR 48395, Sept. 24, 1991, unless otherwise noted.

Subpart A—General

§ 663.1 Purpose.

This part implements section 12(j) of the Federal Mass Transit Act of 1964, as amended, which was added by section 319 of the 1987 Surface Transportation and Uniform Relocation Assistance Act (Pub. L. 100–17). Section 12(j) requires the Federal Transit Administration, by delegation from the Secretary of Transportation, to issue regulations requiring pre-award and post-delivery audits when a recipient of Federal financial assistance purchases rolling stock with funds made available under the Federal Mass Transit Act, as amended.

§ 663.3 Scope.

This part applies to a recipient purchasing rolling stock to carry passengers in revenue service with funds made available under sections 3, 9, 18, and 16(b)(2) of the Federal Mass Transit Act, as amended; 23 U.S.C. 103(e)(4); and section 14 of the National Capital Transportation Act of 1969, as amended.

§ 663.5 Definitions.

As used in this part—

(a) *Pre-award* means that period in the procurement process before the recipient enters into a formal contract with the supplier.

(b) *Post-delivery* means the time period in the procurement process from when the rolling stock is delivered to the recipient until title to the rolling stock is transferred to the recipient or the rolling stock is put into revenue service, whichever is first.

(c) *Recipient* means a recipient of Federal financial assistance from FTA.

(d) *Revenue service* means operation of rolling stock for transportation of fare-paying passengers as anticipated by the recipient.

(e) *Rolling stock* means buses, vans, cars, railcars, locomotives, trolley cars and buses, ferry boats, and vehicles used for guideways and incline planes.

(f) *Audit* means a review resulting in a report containing the necessary certifications of compliance with Buy America standards, purchaser's requirements specifications, and, where appropriate, a manufacturer's certification of compliance with or inapplicability of the Federal Motor Vehicle Safety Standards, required by section 319 of STURAA and this part.

(g) *FTA* means the Federal Transit Administration.

§ 663.7 Certification of compliance to FTA.

A recipient purchasing revenue service rolling stock with funds obligated by FTA on or after October 24, 1991, must certify to FTA that it will conduct or cause to be conducted pre-award and post-delivery audits as prescribed in this part. In addition, such a recipient must maintain on file the certifications required under subparts B, C, and D of this part.

§ 663.9 Audit limitations.

(a) An audit under this part is limited to verifying compliance with

(1) Applicable Buy America requirements [section 165 of the Surface Transportation Assistance Act of 1982, as amended,]; and

(2) Solicitation specification requirements of the recipient.

(b) An audit under this part includes, where appropriate, a copy of a manufacturer's self certification information that the vehicle complies with Federal Motor Vehicle Safety Standards or a certification that such standards are inapplicable.

(c) An audit conducted under this part is separate from the single annual audit requirement established by Office of Management and Budget Circular A–128, ''Audits of State and Local Governments,'' dated May 16, 1985.

§ 663.11 Audit financing.

A recipient purchasing revenue rolling stock with FTA funds may charge the cost of activities required by this part to the grant which FTA made for such purchase.

§ 663.13 Buy America requirements.

A Buy America certification under this part shall be issued in addition to any certification which may be required by part 661 of this title. Nothing in this part precludes FTA from conducting a Buy America investigation under part 661 of this title.

§ 663.15 Compliance.

A recipient subject to this part shall comply with all applicable requirements of this part. Such compliance is a condition of receiving Federal financial assistance from FTA. A recipient determined not to be in compliance with this part will be subject to the immediate suspension, withholding, or repayment of Federal financial assistance from FTA or other appropriate actions unless and until it comes into compliance with this part.

Subpart B—Pre-Award Audits

§ 663.21 Pre-award audit requirements.

A recipient purchasing revenue service rolling stock with FTA funds must ensure that a pre-award audit under this part is complete before the recipient enters into a formal contract for the purchase of such rolling stock.

§ 663.23 Description of pre-award audit.

A pre-award audit under this part includes—

(a) A Buy America certification as described in § 663.25 of this part;

(b) A purchaser's requirements certification as described in § 663.27 of this part; and

(c) Where appropriate, a manufacturer's Federal Motor Vehicle Safety certification information as described in § 663.41 or § 663.43 of this part.

§ 663.25 Pre-award Buy America certification.

For purposes of this part, a pre-award Buy America certification is a certification that the recipient keeps on file that—

(a) There is a letter from FTA which grants a waiver to the rolling stock to be purchased from the Buy America requirements under section 165(b)(1), (b)(2), or (b)(4) of the Surface Transportation Assistance Act of 1982, as amended; or

(b) The recipient is satisfied that the rolling stock to be purchased meets the requirements of section 165(a) or (b)(3) of the Surface Transportation Assistance Act of 1982, as amended, after having reviewed itself or through an audit prepared by someone other than the manufacturer or its agent documentation provided by the manufacturer which lists—

(1) Component and subcomponent parts of the rolling stock to be purchased identified by manufacturer of the parts, their country of origin and costs; and

(2) The location of the final assembly point for the rolling stock, including a description of the activities that will take place at the final assembly point and the cost of final assembly.

§ 663.27 Pre-award purchaser's requirements certification.

For purposes of this part, a pre-award purchaser's requirements certification is a certification a recipient keeps on file that—

(a) The rolling stock the recipient is contracting for is the same product described in the purchaser's solicitation specification; and

(b) The proposed manufacturer is a responsible manufacturer with the capability to produce a vehicle that meets the recipient's specification set forth in the recipient's solicitation.

Subpart C—Post-Delivery Audits

§ 663.31 Post-delivery audit requirements.

A recipient purchasing revenue service rolling stock with FTA funds must ensure that a post-delivery audit under this part is complete before title to the

rolling stock is transferred to the recipient.

§ 663.33 Description of post-delivery audit.

A post-delivery audit under this part includes—

(a) A post-delivery Buy America certification as described in § 663.35 of this part;

(b) A post-delivery purchaser's requirements certification as described in § 663.37 of this part; and

(c) When appropriate, a manufacturer's Federal Motor Vehicle Safety Standard self-certification information as described in § 663.41 or § 663.43 of this part.

§ 663.35 Post-delivery Buy America certification.

For purposes of this part, a post-delivery Buy America certification is a certification that the recipient keeps on file that—

(a) There is a letter from FTA which grants a waiver to the rolling stock received from the Buy America requirements under sections 165 (b)(1), or (b)(4) of the Surface Transportation Assistance Act of 1982, as amended; or

(b) The recipient is satisfied that the rolling stock received meets the requirements of section 165 (a) or (b)(3) of the Surface Transportation Assistance Act of 1982, as amended, after having reviewed itself or by means of an audit prepared by someone other than the manufacturer or its agent documentation provided by the manufacturer which lists—

(1) Components and subcomponent parts of the rolling stock identified by manufacturer of the parts, their country of origin and costs; and

(2) The actual location of the final assembly point for the rolling stock including a description of the activities which took place at the final assembly point and the cost of the final assembly.

§ 663.37 Post-delivery purchaser's requirements certification.

For purposes of this part, a post-delivery purchaser's requirements certification is a certification that the recipient keeps on file that—

(a) Except for procurements covered under paragraph (c) in this section, a resident inspector (other than an agent or employee of the manufacturer) was at the manufacturing site throughout the period of manufacture of the rolling stock to be purchased and monitored and completed a report on the manufacture of such rolling stock. Such a report, at a minimum, shall—

(1) Provide accurate records of all vehicle construction activities; and

(2) Address how the construction and operation of the vehicles fulfills the contract specifications.

(b) After reviewing the report required under paragraph (a) of this section, and visually inspecting and road testing the delivered vehicles, the vehicles meet the contract specifications.

(c) For procurements of:

(1) Ten or fewer buses; or

(2) Procurements of twenty vehicles or fewer serving rural (other than urbanized) areas, or urbanized areas of 200,000 people or fewer; or

(3) Any number of primary manufacturer standard production and unmodified vans, after visually inspecting and road testing the vehicles, the vehicles meet the contract specifications.

[56 FR 48395, Sept. 24, 1991, as amended at 71 FR 14118, Mar. 21, 2006]

§ 663.39 Post-delivery audit review.

(a) If a recipient cannot complete a post-delivery audit because the recipient or its agent cannot certify Buy America compliance or that the rolling stock meets the purchaser's requirements specified in the contract, the rolling stock may be rejected and final acceptance by the recipient will not be required. The recipient may exercise any legal rights it has under the contract or at law.

(b) This provision does not preclude the recipient and manufacturer from agreeing to a conditional acceptance of rolling stock pending manufacturer's correction of deviations within a reasonable period of time.

Subpart D—Certification of Compliance With or Inapplicability of Federal Motor Vehicle Safety Standards

§ 663.41 Certification of compliance with Federal motor vehicle safety standards.

If a vehicle purchased under this part is subject to the Federal Motor Vehicle Safety Standards issued by the National Highway Traffic Safety Administration in part 571 of this title, a recipient shall keep on file its certification that it received, both at the pre-award and post-delivery stage, a copy of the manufacturer's self-certification information that the vehicle complies with relevant Federal Motor Vehicle Safety Standards.

§ 663.43 Certification that Federal motor vehicle standards do not apply.

(a) Except for rolling stock subject to paragraph (b) of this section, if a vehicle purchased under this part is not subject to the Federal Motor Vehicle Safety Standards issued by the National Highway Traffic Safety Administration in part 571 of this title, the recipient shall keep on file its certification that it received a statement to that effect from the manufacturer.

(b) This subpart shall not apply to rolling stock that is not a motor vehicle.

PART 665—BUS TESTING

Subpart A—General

665.1 Purpose.
665.3 Scope.
665.5 Definitions.
665.7 Grantee certification of compliance.

Subpart B—Bus Testing Procedures

665.11 Testing requirements.
665.13 Test report and manufacturer certification.

Subpart C—Operations

665.21 Scheduling.
665.23 Fees.
665.25 Transportation of vehicle.
665.27 Procedures during testing.

APPENDIX A TO PART 665—TESTS TO BE PERFORMED AT THE BUS TESTING FACILITY

AUTHORITY: 49 U.S.C. 5318 and 49 CFR 1.51.

SOURCE: 74 FR 51089, Oct. 5, 2009, unless otherwise noted.

Subpart A—General

§ 665.1 Purpose.

An applicant for Federal financial assistance under the Federal Transit Act for the purchase or lease of buses with funds obligated by the FTA shall certify to the FTA that any new bus model acquired with such assistance has been tested in accordance with this part. This part contains the information necessary for a recipient to ensure compliance with this provision.

§ 665.3 Scope.

This part shall apply to an entity receiving Federal financial assistance under 49 U.S.C. Chapter 53.

§ 665.5 Definitions.

As used in this part—

Administrator means the Administrator of the Federal Transit Administration or the Administrator's designee.

Automotive means that the bus is not continuously dependent on external power or guidance for normal operation. Intermittent use of external power or guidance shall not automatically relieve a bus of its automotive character or requirement for bus testing.

Bus means a rubber-tired automotive vehicle used for the provision of public transportation service by or for a recipient.

Bus model means a bus design or variation of a bus design usually designated by the manufacturer by a specific name and/or model number.

Bus testing facility means the bus testing facility established by the Secretary of Transportation, and includes test track facilities operated in connection with the facility.

Bus testing report, also *full bus testing report*, means a complete test report for a bus model, documenting the results of performing the complete set of bus tests on that bus model.

Curb weight means the weight of the empty, ready-to-operate bus plus driver and fuel.

Emissions means the components of the engine tailpipe exhaust that are regulated by the United States Environmental Protection Agency (EPA), plus carbon dioxide (CO_2) and methane (CH_4).

Emissions control system means the components on a bus whose primary purpose is to minimize regulated emissions before they reach the tailpipe exit. This definition does not include components that contribute to low emissions as a side effect of the manner in which they perform their primary function (*e.g.*, fuel injectors or combustion chambers).

Final acceptance means that a recipient has released the FTA-provided funds to a bus manufacturer or dealer in connection with bus procurement.

Gross weight, also *gross vehicle weight*, means the curb weight of the bus plus passengers simulated by adding 150 pounds of ballast to each seating position and 150 pounds for each standing position (assumed to be each 1.5 square feet of free floor space).

Hybrid means a propulsion system that combines two power sources, at least one of which is capable of capturing, storing, and re-using energy.

Major change in chassis design means, for vehicles manufactured on a third-party chassis, a change in frame structure, material or configuration, or a change in chassis suspension type.

Major change in components means:

(1) For those vehicles that are not manufactured on a third-party chassis, a change in a vehicle's engine, axle, transmission, suspension, or steering components;

(2) For those that are manufactured on a third-party chassis, a change in the vehicle's chassis from one major design to another.

Major change in configuration means a change that is expected to have a significant impact on vehicle handling and stability or structural integrity.

Modified third-party chassis or van means a vehicle that is manufactured from an incomplete, partially assembled third-party chassis or van as provided by an OEM to a small bus manufacturer. This includes vehicles whose chassis structure has been modified to include: a tandem or tag axle; a drop or lowered floor; changes to the GVWR from the OEM rating; or other modifications that are not made in strict conformance with the OEM's modifications guidelines.

New bus model means a bus model that—

(1) Has not been used in public transportation service in the United States before October 1, 1988; or

(2) Has been used in such service but which after September 30, 1988, is being produced with a major change in configuration or a major change in components.

Operator means the operator of the bus testing facility.

Original equipment manufacturer (OEM) means the original manufacturer of a chassis or van supplied as a complete or incomplete vehicle to a bus manufacturer.

Parking brake means a system that prevents the bus from moving when parked by preventing the wheels from rotating.

Partial testing means the performance of only that subset of the complete set of bus tests in which significantly different data would reasonably be expected compared to the data obtained in previous full testing of the baseline bus model at the bus testing facility.

Partial testing report, also *partial test report*, means a report documenting, for a previously-tested bus model that is produced with major changes, the results of performing only that subset of the complete set of bus tests in which significantly different data would reasonably be expected as a result of the changes made to the bus from the configuration documented in the original full bus testing report. A partial testing report is not valid unless accompanied by the full bus testing report for the corresponding baseline bus configuration.

Public transportation service means the operation of a vehicle that provides general or special service to the public on a regular and continuing basis.

Recipient means an entity that receives funds under 49 U.S.C. Chapter 53, either directly from FTA or through a State administering agency.

Regenerative braking system means a system that decelerates a bus by recovering its kinetic energy for on-board storage and subsequent use.

Retarder means a system other than the service brakes that slows a bus by dissipating kinetic energy.

Seated load weight means the weight of the bus plus driver, fuel, and seated passengers simulated by adding 150 pounds of ballast to each seating position.

Service brake(s) means the primary system used by the driver during normal operation to reduce the speed of a moving bus and to allow the driver to bring the bus to a controlled stop and hold it there. Service brakes may be supplemented by retarders or by regenerative braking systems.

Small bus manufacturer means a secondary market assembler that acquires a chassis or van from an original equipment manufacturer for subsequent modification or assembly and sale as 5-year/150,000-mile or 4-year/100,000-mile minimum service life vehicle.

Tailpipe emissions means the exhaust constituents actually emitted to the atmosphere at the exit of the vehicle tailpipe or corresponding system.

Third party chassis means a commercially available chassis whose design, manufacturing, and quality control are performed by an entity independent of the bus manufacturer.

Unmodified mass-produced van means a van that is mass-produced, complete and fully assembled as provided by an OEM. This shall include vans with raised roofs, and/or wheelchair lifts, or ramps that are installed by the OEM, or by a party other than the OEM provided that the installation of these components is completed in strict conformance with the OEM modification guidelines.

Unmodified third-party chassis means a third-party chassis that either has not been modified, or has been modified in strict conformance with the OEM's modification guidelines.

§ 665.7 Grantee certification of compliance.

(a) In each application to FTA for the purchase or lease of any new bus model, or any bus model with a major change in configuration or components to be acquired or leased with funds obligated by the FTA, the recipient shall certify that the bus was tested at the bus testing facility. The recipient shall receive the appropriate full bus testing report and any applicable partial testing report(s) before final acceptance of the first vehicle by the recipient.

(b) In dealing with a bus manufacturer or dealer, the recipient shall be responsible for determining whether a vehicle to be acquired requires full testing or partial testing or has already satisfied the requirements of this part.

Subpart B—Bus Testing Procedures

§ 665.11 Testing requirements.

(a) A new bus model to be tested at the bus testing facility shall—

(1) Be a single model;

(2) Meet all applicable Federal Motor Vehicle Safety Standards, as defined by the National Highway Traffic Safety Administration in Part 571 of this title; and

(3) Be substantially fabricated and assembled using the techniques, tooling, and materials that will be used in production of subsequent buses of that model.

(b) If the new bus model has not previously been tested at the bus testing facility, then the new bus model shall undergo the full tests requirements for Maintainability, Reliability, Safety, Performance including braking performance, Structural Integrity, Fuel Economy, Noise, and Emissions;

(c) If the new bus model has not previously been tested at the bus testing facility and is being produced on a third-party chassis that has been previously tested on another bus model at the bus testing facility, then the new bus model may undergo partial testing requirements;

(d) If the new bus model has previously been tested at the bus testing facility, but is subsequently manufactured with a major change in chassis or components, then the new bus model may undergo partial testing.

(e) The following vehicle types shall be tested:

(1) Large-size, heavy-duty transit buses (approximately 35′–40′ in length, as well as articulated buses) with a minimum service life of 12 years or 500,000 miles;

(2) Medium-size, heavy-duty transit buses (approximately 30′ in length)

with a minimum service life of ten years or 350,000 miles;

(3) Medium-size, medium duty transit buses (approximately 30′ in length) with a minimum service life of seven years or 200,000 miles;

(4) Medium-size, light duty transit buses (approximately 25′–35′ in length) with a minimum service life of five years or 150,000 miles; and

(5) Other light duty vehicles such as small buses and regular and specialized vans with a minimum service life of four years or 100,000 miles.

(f) Tests performed in a higher service life category (*i.e.*, longer service life) need not be repeated when the same bus model is used in lesser service life applications.

(g) The operator of the bus testing facility shall develop a test plan for the testing of vehicles at the facility. The test plan shall follow the guidelines set forth in the appendix to this part.

§ 665.13 Test report and manufacturer certification.

(a) Upon completion of testing, the operator of the facility shall provide the resulting test report to the entity that submitted the bus for testing.

(b)(1) A manufacturer or dealer of a new bus model or a bus produced with a major change in component or configuration shall provide a copy of the corresponding full bus testing report and any applicable partial testing report(s) to a recipient during the point in the procurement process specified by the recipient, but in all cases before final acceptance of the first bus by the recipient.

(2) A manufacturer who releases a report under paragraph (b)(1) of this section also shall provide notice to the operator of the facility that the report is available to the public.

(c) If a bus model subject to a bus testing report has a change that is not a major change under this Part, the manufacturer or dealer shall advise the recipient during the procurement process and shall include a description of the change and the manufacturer's basis for concluding that it is not a major change.

(d) A bus testing report shall be available publicly once the bus manufacturer makes it available during a recipient's procurement process. The operator of the facility shall have copies of all the publicly available reports available for distribution.

(e) The bus testing report is the only information or documentation that shall be made publicly available in connection with any bus model tested at the bus testing facility.

Subpart C—Operations

§ 665.21 Scheduling.

(a) To schedule a bus for testing, a manufacturer shall contact the operator of FTA's bus testing program. Contact information and procedures are available on the operator's bus testing Web site, *http://www.altoonabustest.com.*

(b) Upon contacting the operator, the operator shall provide the manufacturer with the following:

(1) A draft contract for the testing;

(2) A fee schedule; and

(3) The draft test procedures that will be conducted on the vehicle.

(c) The operator shall provide final test procedures to be conducted on the vehicle at the time of contract execution.

(d) The operator shall process vehicles for testing in the order in which the contracts are signed.

§ 665.23 Fees.

(a) The operator shall charge fees in accordance with a schedule approved by FTA, which shall include prorated fees for partial testing.

(b) Fees shall be prorated for a vehicle withdrawn from the bus testing facility before the completion of testing.

§ 665.25 Transportation of vehicle.

A manufacturer shall be responsible for transporting its vehicle to and from the bus testing facility at the beginning and completion of the testing at the manufacturer's own risk and expense.

§ 665.27 Procedures during testing.

(a) The operator shall perform all maintenance and repairs on the test vehicle, consistent with the manufacturer's specifications, unless the operator determines that the nature of the

maintenance or repair is best performed by the manufacturer under the operator's supervision.

(b) The manufacturer shall be permitted to observe all tests. The manufacturer shall not provide maintenance or service unless requested to do so by the operator.

APPENDIX A TO PART 665—TESTS TO BE PERFORMED AT THE BUS TESTING FACILITY

The eight tests to be performed on each vehicle are required by SAFETEA–LU and are based in part on tests described in the FTA report ''First Article Transit Bus Test Plan,'' which is mentioned in the legislative history of section 317 of STURAA. When appropriate, Society of Automotive Engineers (SAE) test procedures and other procedures accepted by the transit industry will be used. The eight tests are described in general terms in the following paragraphs.

1. MAINTAINABILITY

The maintainability test should include bus servicing, preventive maintenance, inspection, and repair. It also should include the removal and reinstallation of the engine and drive train components that would be expected to require replacement during the bus's normal life cycle. Much of the maintainability data should be obtained during the bus durability test at the test track. Up to twenty-five percent of the bus life should be simulated and servicing, preventive maintenance, and repair actions should be recorded and reported. These actions should be performed by test facility staff, although manufacturers should be allowed to maintain a representative on site during the testing. Test facility staff may require a manufacturer to provide vehicle servicing or repair, under the supervision of the facility staff. Because the operator will not become familiar with the detailed design of all new bus models that are tested, tests to determine the time and skill required to remove and reinstall an engine, a transmission, or other major propulsion system components may require advice from the bus manufacturer. All routine and corrective maintenance should be carried out by the test operator in accordance with the manufacturer's specifications.

The maintainability test report should include the frequency, personnel hours, and replacement parts or supplies required for each action during the test. The accessibility of selected components and other observations that could be important to a bus user should be included in the report.

2. RELIABILITY

Reliability should not be a separate test, but should be addressed by recording all bus failures and breakdowns during testing. It is recognized that with one test bus it is not feasible to conduct statistical reliability tests. The detected bus failures, repair time, and the actions required to return the bus to operation should be recorded in the report.

3. SAFETY

The safety test should consist of a handling and stability test. The handling and stability test should be an obstacle avoidance or double-lane change test performed at the test track. Bus speed should be held constant throughout a given test run. Individual test runs should be made at increasing speeds up to a specified maximum or until the bus can no longer be operated safely over the course, whichever speed is lower. Both left- and right-hand lane changes should be tested.

4. PERFORMANCE

The performance test should be performed on the test track and should measure acceleration, maximum speed attained, gradeability, and braking. The bus should be accelerated at full throttle from a full stop to maximum safe speed on the track. The gradeability capabilities should be measured when starting from a full stop on a steep grade, and supplemented by calculating gradeability based on the acceleration data. The functionality and performance of the service, regenerative (if applicable), and parking brake systems should be evaluated at the test track. The test bus should be subjected to a series of brake stops from specified speeds on high, low, and split-friction surfaces. The parking brake should be evaluated with the bus parked facing both up and down a steep grade.

5. STRUCTURAL INTEGRITY

Two complementary structural integrity tests should be performed. Structural strength and distortion tests should be performed at the Bus Testing Center, and the structural durability test should be performed at the test track.

a. Structural Strength and Distortion Tests

(1) A shakedown of the bus structure should be conducted by loading and unloading the bus with a distributed load equal to 2.5 times the load applied for the gross weight portions of testing. The bus should then be unloaded and inspected for any permanent deformation on the floor or coach structure. This test should be repeated a second time, and should be repeated up to one more time if the permanent deflections vary

significantly between the first and second tests.

(2) The bus should be loaded to gross vehicle weight, with one wheel on top of a curb and then in a pothole. This test should be repeated for all four wheels. The test verifies: normal operation of the steering mechanism; and operability of all passenger doors, passenger escape mechanisms, windows, and service doors. A water leak test should be conducted in each suspension travel condition.

(3) Using a load-equalizing towing sling, a static tension load equal to 1.2 times the curb weight should be applied to the bus towing fixtures (front and rear). The load should be removed and the two eyes and adjoining structure inspected for damages or permanent deformations.

(4) The bus should be towed at curb weight with a heavy wrecker truck for several miles and then inspected for structural damage or permanent deformation.

(5) With the bus at curb weight probable damages and clearance issues due to tire deflating and jacking should be assessed.

(6) With the bus at curb weight possible damages or deformation associated with lifting the bus on a two post hoist system or supporting it on jack stands should be assessed.

b. Structural Durability

The structural durability test should be performed on the durability course at the test track, simulating twenty-five percent of the vehicle's normal service life. The bus structure should be inspected regularly during the test, and the mileage and identification of any structural anomalies and failures should be reported in the reliability test.

6. FUEL ECONOMY

The fuel economy test should be conducted using duty cycles that simulate transit service. This test should measure the fuel economy of the bus in miles per gallon or other energy-equivalent units.

The fuel economy test should be designed only to enable FTA recipients to compare the relative fuel economy of buses operating at a consistent loading condition on the same set of typical transit driving cycles. The results of this test are not directly comparable to fuel economy estimates by other agencies, such as the U.S. Environmental Protection Agency (EPA) or for other purposes.

7. NOISE

The noise test should measure interior noise and vibration while the bus is idling (or in a comparable operating mode) and driving, and also should measure the transmission of exterior noise to the interior while the bus is not running. The exterior noise should be measured as the bus is operated past a stationary measurement instrument.

8. EMISSIONS

The emissions test should measure tailpipe emissions of those exhaust constituents regulated by the United States Environmental Protection Agency (EPA) for transit bus emissions, plus carbon dioxide (CO_2) and methane (CH_4), as the bus is operated over specified driving cycles. The emissions test should be conducted using an emissions testing laboratory equipped with a chassis dynamometer capable of both absorbing and applying power.

The emissions test is not a certification test, and is designed only to enable FTA recipients to compare the relative emissions of buses operating on the same set of typical transit driving cycles. The results of this test are not directly comparable to emissions measurements obtained by other agencies, such as the EPA, which are used for other purposes.

CHAPTER VII—NATIONAL RAILROAD PASSENGER CORPORATION (AMTRAK)

Part		*Page*
700	Organization, functioning and available information	515
701	Amtrak Freedom of Information Act program	517

PART 700—ORGANIZATION, FUNCTIONING AND AVAILABLE INFORMATION

Sec.
700.1 Purpose.
700.2 Organization and functioning of Amtrak.
700.3 Availability of documents, assistance, and information.

AUTHORITY: 5 U.S.C. 552(a) (1), (2).

SOURCE: 49 FR 24378, June 13, 1984, unless otherwise noted.

§ 700.1 Purpose.

This part describes the organization and functioning of Amtrak and the availability to the public of documents and information concerning its policies, procedures and activities.

§ 700.2 Organization and functioning of Amtrak.

The creation of the National Railroad Passenger Corporation (''Amtrak'') was authorized by the Rail Passenger Service Act, as amended, 84 Stat. 1327, 45 U.S.C. 541 *et seq.* (''the Act''). The Act requires that Amtrak be operated and managed as a for-profit corporation, that it be incorporated under the District of Columbia Business Corporation Act, and subject to the provisions of that statute to the extent not inconsistent with the Act, and that it provide a balanced transportation system by developing, operating, and improving intercity rail passenger service. The Act also states that Amtrak will not be an agency or establishment of the United States Government. Amtrak thus is a corporation created by Congress to compete for the transportation business of the intercity traveller, to the end that the travelling public will have a choice of travel modes. The address of its headquarters is 400 North Capitol Street, NW., Washington, DC 20001. Telephone: (202) 383–3000.

(a) *Board of Directors.* Amtrak's major policies are established by its board of directors. The nine members of the board are selected as follows: The Secretary of Transportation serves as an ex-officio member and Amtrak's President, ex-officio, is Chairman of the Board; three members are appointed by the President of the United States and confirmed by the Senate (representing labor, State Governors, and business); two represent commuter authorities and are selected by the President from lists drawn up by those authorities; and two are selected by the Corporation's preferred stockholder, the Department of Transportation.

(b) *Officers and central management.* Amtrak is managed by a President and a Management Committee consisting of four Executive Vice Presidents. Reporting to the Executive Vice Presidents are eleven vice presidents representing sales, transportation marketing, planning and development, computer services, labor relations, finance and treasurer, personnel, passenger and operating services, government affairs, operations and maintenance, engineering, and the General Counsel. Areas handled as special matters with the authority of vice presidents, such as corporate communications, safety, real estate, procurement, materials management, police and security, contract administration, and internal audit are supervised by assistant vice presidents and directors.

(c) *Regional and field structure.* The need for decentralization of functions in the areas of passenger services and transportation operations has led to the creation of Amtrak's regional and field structure. Field offices are located in major cities such as Baltimore, Philadelphia, New York, Albany, Boston, Chicago, Seattle and Los Angeles. Pursuant to overall policies established at headquarters in Washington, DC, these offices handle matters like the assignment and scheduling of employees who work on board moving trains; purchase, stowage and preparation of food for dining service; maintenance and rehabilitation of rolling stock; and daily operating arrangements such as the make-up of trains or the cleaning and repairing of cars on trains.

(d) *Route system.* Amtrak's basic route system has been established pursuant to statutory guidelines, and in some cases by specific statutory directive. Out of a route system covering about 23,000 route-miles, Amtrak owns a right-of-way of about 2,600 track miles in the Northeast Corridor (Washington-New York-Boston; New Haven-

Springfield; and Philadelphia-Harrisburg) and small segments of track near Albany, New York, and Kalamazoo, Michigan. In the Northeast Corridor Amtrak trains are run by operating crews consisting of Amtrak employees. On other routes, Amtrak operates trains on the tracks of about twenty different privately owned railroads and compensates the railroad for the use of their facilities and for the services of their employees, including engineers, conductors, and maintenance personnel. Those private railroads are responsible for the conditions of the roadbed and for coordinating the flow of traffic over their lines.

(e) *Operations.* Amtrak provides about 250 trains daily, serving about 500 stations in over forty states. Amtrak owns most of its cars and locomotives, some of its stations, and most of its repair facilities. Its capital improvements and almost half of its operating losses are supported principally through Federal financing, with some State, regional and local financial support for some trains and stations. Congress requires Amtrak to earn revenues equivalent to at least fifty percent of its operating costs, and it currently does so.

(f) *Revenue production.* The sale of tickets for transportation and accommodations, Amtrak's principal source of revenue, is accomplished through Amtrak ticket agents at stations, travel agencies, and five central reservation offices which service a nationwide telephone network. National Timetables contain basic information about routes, stations, and services.

§ 700.3 Availability of documents, assistance, and information.

(a) A member of the public having need for assistance or information concerning any of the matters described in § 700.2 should address his or her concerns in a letter or other written communication directed to the appropriate vice president or to the Director of Corporate Communications. Amtrak will bring such communications to the attention of the appropriate official if they are misdirected in the first instance. Formal requests for ''records'' under 5 U.S.C. 552(a)(3) of the Freedom of Information Act are to be made in accordance with the provisions of 49 CFR 701.4.

(b) The National Train Timetables described in § 700.2(f) are widely distributed in the continental United States and are available in major cities in Europe, Canada and Mexico. When they are updated (usually in April and October each year) each printing involves about 1,000,000 copies. They are ordinarily available at staffed Amtrak stations and copies are usually kept on hand in the offices of about 9800 travel agents who are authorized to sell Amtrak tickets. A person unable to obtain a copy locally should request one from the Director of Corporate Communications at the Washington, DC headquarters. The timetable depicts the major Amtrak train routes on a map of the United States, and most of the remainder of the booklet shows the schedules for specific trains. Several pages are used to offer travel information dealing with the availability of assistance to handicapped travellers, red cap service, purchase of tickets on board, use of credit cards and personal checks, handling of baggage, refunds for unused tickets and similar matters.

(c) Also available to members of the public at most staffed Amtrak stations, and usually maintained in the offices of travel agencies authorized to sell Amtrak tickets, is a copy of the Reservations and Ticketing Manual (RTM) which constitutes a compendium of information governing Amtrak employees in furnishing transportation to the travelling public. It contains substantial segments dedicated to the following topics: Amtrak's computer system and its communication codes; interline service agreements; passenger and baggage services; customer relations functions; reservations policy and procedures; acceptance of checks and credit cards; refunds; missed connection policies; ticketing; accommodations; employee pass travel; location maps for Amtrak stations; and intermodal state maps.

(d) A full statement of Amtrak's tariffs containing the fares for point-to-point travel, regional plan travel and all relevant travel conditions, such as excursions, discounts, family plans, accommodations, etc., is contained in the privately published *Official Railway*

Guide, which is available by subscription from its publisher at 424 West 33rd Street, New York, New York 10001. A copy of the guide can usually be found at each staffed Amtrak station, and at the offices of travel agents authorized to sell Amtrak tickets. Tariff changes which occur between issues of the Guide are published and widely distributed by Amtrak pending their publication in the next issue of the Guide.

(e) Each of the documents described in paragraphs (b) through (d) of this section is available to the public for inspection during regular business hours at the office of Amtrak's Freedom of Information Office at its headquarters at 400 North Capitol Street, NW., Washington, DC 20001, and at the office of the Division Manager, Human Resources, in New Haven, Philadelphia, Baltimore, New York, Los Angeles and Chicago. Each document has its own index. Since each index is useful only in connection with the document to which it pertains, and since requests for indices are uncommon, Amtrak has determined that publication of its indices as described in 5 U.S.C. 552(a)(2) would be unnecessary and impracticable.

PART 701—AMTRAK FREEDOM OF INFORMATION ACT PROGRAM

Sec.

701.1 General provisions.
701.2 Definitions.
701.3 Policy.
701.4 Amtrak public information.
701.5 Requirements for making requests.
701.6 Release and processing procedures.
701.7 Timing of responses to requests.
701.8 Responses to requests.
701.9 Business information.
701.10 Appeals.
701.11 Fees.
701.12 Other rights and services.

AUTHORITY: 5 U.S.C. 552; 49 U.S.C. 24301(e).

SOURCE: 63 FR 7311, Feb. 13, 1998, unless otherwise noted.

§ 701.1 General provisions.

This part contains the rules that the National Railroad Passenger Corporation (''Amtrak'') follows in processing requests for records under the Freedom of Information Act (FOIA), Title 5 of the United States Code, section 552. Information routinely provided to the public (*i.e.*, train timetables, press releases) may be obtained without following Amtrak's FOIA procedures. As a matter of policy, Amtrak may make discretionary disclosures of records or information exempt under the FOIA whenever disclosure would not foreseeably harm an interest protected by an FOIA exemption; however, this policy does not create any right enforceable in court.

§ 701.2 Definitions.

Unless the context requires otherwise in this part, masculine pronouns include the feminine gender and ''includes'' means ''includes but is not limited to.''

(a) *Amtrak or Corporation* means the National Railroad Passenger Corporation.

(b) *Appeal* means a request submitted to the President of Amtrak or designee for review of an adverse initial determination.

(c) *Business days* means working days; Saturdays, Sundays, and legal public holidays are excluded in computing response time for processing FOIA requests.

(d) *Disclose or disclosure* means making records available for examination or copying, or furnishing a copy of nonexempt responsive records.

(e) *Electronic data* means records and information (including E-mail) that are created, stored, and retrievable by electronic means.

(f) *Exempt information* means information that is exempt from disclosure under one or more of the nine exemptions to the FOIA.

(g) *Final determination* means a decision by the President of Amtrak or designee concerning a request for review of an adverse initial determination received in response to an FOIA request.

(h) *Freedom of Information Act or ''FOIA''* means the statute as codified in section 552 of Title 5 of the United States Code as amended.

(i) *Freedom of Information Officer* means the Amtrak official designated to fulfill the responsibilities of implementing and administering the Freedom of Information Act as specifically designated under this part.

(j) *Initial determination* means a decision by an Amtrak FOIA Officer in response to a request for information under the FOIA.

(k) *Pages* means paper copies of standard office size or the cost equivalent in other media.

(l) *President* means the President and Chief Executive Officer (CEO) of the National Railroad Passenger Corporation (Amtrak) or designee.

(m) *Record* means any writing, drawing, map, recording, tape, film, photograph, or other documentary material by which information is preserved in any format, including electronic format. A record must exist and be in the possession and control of Amtrak at the time of the request to be subject to this part and the FOIA. The following are not included within the definition of the word ''record'':

(1) Library materials compiled for reference purposes or objects of substantial intrinsic value.

(2) Routing and transmittal sheets, notes, and filing notes which do not also include information, comments, or statements of substance.

(3) Anything that is not a tangible or documentary record such as an individual's memory or oral communication.

(4) Objects or articles, whatever their historical or value as evidence.

(n) *Request* means any request for records made pursuant to 5 U.S.C. 552(a)(3).

(o) *Requester or requesting party* means any person who has submitted a request to Amtrak.

(p) *Responsive records* means documents determined to be within the scope of a FOIA request.

§ 701.3 Policy.

(a) Amtrak will make records of the Corporation available to the public to the greatest practicable extent in keeping with the spirit of the law. Therefore, records of the Corporation are available for public inspection and copying as provided in this part with the exception of those that the Corporation specifically determines should not be disclosed either in the public interest, for the protection of private rights, or for the efficient conduct of public or corporate business, but only to the extent withholding is permitted by law.

(b) A record of the Corporation, or parts thereof, may be withheld from disclosure if it comes under one or more exemptions in 5 U.S.C. 552(b) or is otherwise exempted by law. Disclosure to a properly constituted advisory committee, to Congress, or to federal agencies does not waive the exemption.

(c) In the event one or more exemptions apply to a record, any reasonably segregable portion of the record will be made available to the requesting person after deletion of the exempt portions. The entire record may be withheld if a determination is made that nonexempt material is so inextricably intertwined that disclosure would leave only essentially meaningless words or phrases, or when it can be reasonably assumed that a skillful and knowledgeable person could reconstruct the deleted information.

(d) The procedures in this part apply only to records in existence at the time of a request. The Corporation has no obligation to create a record solely for the purpose of making it available under the FOIA or to provide a record that will be created in the future.

(e) Each officer and employee of the Corporation dealing with FOIA requests is directed to cooperate in making records available for disclosure under the Act in a prompt manner consistent with this part.

(f) The FOIA time limits will not begin to run until a request has been identified as being made under the Act and deemed received by the Freedom of Information Office.

(g) Generally, when a member of the public complies with the procedures established in this part for obtaining records under the FOIA, the request shall receive prompt attention, and a response shall be made within twenty business days.

§ 701.4 Amtrak public information.

(a) *Public reading room.* Amtrak maintains a public reading room at its headquarters at 60 Massachusetts Avenue, N.E. in Washington, D.C. The public reading room contains records required under the FOIA to be regularly available for public inspection and copying. A current subject-matter index shall be

maintained of records in the public reading room that are available for inspection and copying. The index shall be updated at least quarterly with respect to newly included records. A copy of the index shall be provided upon request at a cost not to exceed the direct cost of duplication.

(b) *Electronic reading room.* Amtrak will make available electronically reading room records created by the Corporation on or after November 1, 1996 on its World Wide Web site which can be accessed at *http://www.Amtrak.com.* An index of the Corporation's reading room records will also be made available at the web site. The index will indicate reading room records that are available electronically.

(c) *Frequently requested information.* The FOIA requires that copies of records, regardless of form or format, released pursuant to a FOIA request under 5 U.S.C. 552(a)(3) that have become or are likely to become the subject of subsequent requests for substantially the same records be made publicly available. Such records created by the Corporation after November 1, 1996 will be made available electronically while records created prior to this date will be made available for inspection and copying in Amtrak's public reading room.

(1) Amtrak shall decide on a case-by-case basis whether records fall into the category of ''frequently requested FOIA records'' based on the following factors:

(i) Previous experience with similar records;

(ii) The nature and type of information contained in the records;

(iii) The identity and number of requesters and whether there is widespread media or commercial interest in the records.

(2) The provision in this paragraph is intended for situations where public access in a timely manner is important. It is not intended to apply where there may be a limited number of requests over a short period of time from a few requesters. Amtrak may remove the records from this category when it is determined that access is no longer necessary.

(d) *Guide for making requests.* A guide on how to use the FOIA for requesting records from Amtrak shall be made available to the public upon request. Amtrak's major information systems will be described in the guide.

§ 701.5 Requirements for making requests.

(a) *General requirements.* (1) A FOIA request can be made by ''any person'' as defined in 5 U.S.C. 551(2), which encompasses individuals (including foreign citizens; partnerships; corporations; associations; and local, state, tribal, and foreign governments). A FOIA request may not be made by a Federal agency.

(2) A request must be in writing, indicate that it is being made under the FOIA and provide an adequate description of the records sought. The request should also include applicable information regarding fees as specified in paragraphs (d) and (e) of this section.

(b) *How to submit a request.* (1) A request must clearly state on the envelope and in the letter that it is a Freedom of Information Act or ''FOIA'' request.

(2) The request must be addressed to the Freedom of Information Office; National Railroad Passenger Corporation; 60 Massachusetts Avenue, N.E.; Washington, D.C. 20002. Requests will also be accepted by facsimile at (202) 906–2169. Amtrak cannot assure that a timely or satisfactory response under this part will be given to written requests addressed to Amtrak offices, officers, or employees other than the Freedom of Information Office. Amtrak employees receiving a communication in the nature of a FOIA request shall forward it to the FOIA Office expeditiously. Amtrak shall advise the requesting party of the date that an improperly addressed request is received by the FOIA Office.

(c) *Content of the request*—(1) *Description of records.* Identification of records sought under the FOIA is the responsibility of the requester. The records sought should be described in sufficient detail so that Amtrak personnel can locate them with a reasonable amount of effort. When possible, the request should include specific information

such as dates, title or name, author, recipient, subject matter of the record, file designation or number, or other pertinent details for each record or category of records sought.

(2) *Reformulation of a request.* Amtrak is not obligated to act on a request until the requester provides sufficient information to locate the record. Amtrak may offer assistance in identifying records and reformulating a request where: the description is considered insufficient, the production of voluminous records is required, or a considerable number of work hours would be required that would interfere with the business of the Corporation. The Freedom of Information Office shall notify the requester within ten business days of the type of information that will facilitate the search. The requesting party shall be given an opportunity to supply additional information and may submit a revised request, which will be treated as a new request.

(d) *Payment of fees.* The submission of a FOIA request constitutes an agreement to pay applicable fees accessed up to $25.00 unless the requesting party specifies a willingness to pay a greater or lesser amount or seeks a fee waiver or reduction in fees.

(1) *Fees in excess of $25.00.* When Amtrak determines or estimates that applicable fees are likely to exceed $25.00, the requesting party shall be notified of estimated or actual fees, unless a commitment has been made in advance to pay all fees. If only a portion of the fee can be estimated readily, Amtrak shall advise the requester that the estimated fee may be a portion of the total fee.

(i) In order to protect requesters from large and/or unexpected fees, Amtrak will request a specific commitment when it estimates or determines that fees will exceed $100.00.

(ii) A request shall not be considered received, and further processing carried out until the requesting party agrees to pay the anticipated total fee. Any such agreement must be memorialized in writing. A notice under this paragraph will offer the requesting party an opportunity to discuss the matter in order to reformulate the request to meet the requester's needs at a lower cost.

(iii) Amtrak will hold in abeyance for forty-five (45) days requests requiring agreement to pay fees and will thereafter deem the request closed. This action will not prevent the requesting party from refiling the FOIA request with a fee commitment at a subsequent date.

(2) *Fees in excess of $250.* When Amtrak estimates or determines that allowable charges are likely to exceed $250, an advance deposit of the entire fee may be required before continuing to process the request.

(e) *Information regarding fee category.* In order to determine the appropriate fee category, a request should indicate whether the information sought is intended for commercial use or whether the requesting party is a member of the staff of an educational or noncommercial scientific institution or a representative of the news media.

(f) *Records concerning other individuals.* If the request is for records concerning another individual, either a written authorization signed by that individual permitting disclosure of those records to the requesting party or proof that the individual is deceased (*i.e.*, a copy of a death certificate or an obituary) will help to expedite processing of the request.

§ 701.6 Release and processing procedures.

(a) *General provisions.* In determining records that are responsive to a request, Amtrak will ordinarily include only records that exist and are in the possession and control of the Corporation as of the date that the search is begun. If any other date is used, the requesting party will be informed of that date.

(b) *Authority to grant or deny requests.* Amtrak's FOIA officer is authorized to grant or deny any request for records.

(c) *Notice of referral.* If Amtrak refers all or any part of the responsibility for responding to a request to another organization, the requesting party will be notified. A referral shall not be considered a denial of access within the meaning of this part. All consultations and referrals of requests will be handled according to the date that the FOIA request was initially received.

(d) *Creating a record*. There is no obligation on the part of Amtrak to create, compile, or obtain a record to satisfy a FOIA request. The FOIA also does not require that a new computer program be developed to extract the records requested. Amtrak may compile or create a new record, however, when doing so would result in a more useful response to the requesting party or would be less burdensome to Amtrak than providing existing records. The cost of creating or compiling such a record may not be charged to the requester unless the fee for creating the record is equal to or less than the fee that would be charged for providing the existing record.

(e) *Incomplete records*. If the records requested are not complete at the time of a request, Amtrak may, at its discretion, inform the requester that complete nonexempt records will be provided when available without having to submit an additional request.

(f) *Electronic records*. Amtrak is not obligated to process a request for electronic records where creation of a record, programming or a particular format would result in a significant expenditure of resources or interfere with the corporation's operations.

§ 701.7 Timing of responses to requests.

(a) *General*. (1) The time limits of the FOIA will begin only after the requirements for submitting a request as established in § 701.5 have been met, and the request is deemed received by the Freedom of Information Office.

(2) A request for records shall be considered to have been received on the later of the following dates:

(i) The requester has agreed in writing to pay applicable fees in accordance with § 701.5(d), or

(ii) The fees have been waived in accordance with § 701.11(k), or

(iii) Payment in advance has been received from the requester when required in accordance with § 701.11(i).

(3) The time for responding to requests set forth in paragraph (b) of this section may be delayed if:

(i) The request does not sufficiently identify the fee category applicable to the request;

(ii) The request does not state a willingness to pay all fees;

(iii) A request seeking a fee waiver does not address the criteria for fee waivers set forth in § 701.11(k);

(iv) A fee waiver request is denied, and the request does not include an alternative statement indicating that the requesting party is willing to pay all fees.

(b) *Initial determination*. Whenever possible, an initial determination to release or deny a record shall be made within twenty business days after receipt of the request. In ''unusual circumstances'' as described in paragraph (d) of this section, the time for an initial determination may be extended for ten business days.

(c) *Multitrack processing*. (1) Amtrak may use two or more processing tracks by distinguishing between simple and more complex requests based on the amount of work and/or time needed to process a request or the number of pages involved.

(2) In general, when requests are received, Amtrak's FOIA Office will review and categorize them for tracking purposes. Requests within each track will be processed according to date of receipt.

(3) The FOIA Office may contact a requester when a request does not appear to qualify for fast track processing to provide an opportunity to limit the scope of the request and qualify for a faster track. Such notification shall be at the discretion of the FOIA Office and will depend largely on whether it is believed that a narrowing of the request could place the request on a faster track.

(d) *Unusual circumstances*. (1) The requesting party shall be notified in writing if the time limits for processing a request cannot be met because of unusual circumstances, and it will be necessary to extend the time limits for processing the request. The notification shall include the date by which the request can be expected to be completed. Where the extension is for more than ten business days, the requesting party will be afforded an opportunity to either modify the request so that it may be processed within the time limits or to arrange an alternative time

period for processing the initial request or modified request.

(2) If Amtrak believes that multiple requests submitted by a requester or by a group of requesters acting in concert constitute a single request that would otherwise involve unusual circumstances and the requests involve clearly related matters, the requests may be aggregated. Multiple requests concerning unrelated matters may not be aggregated.

(3) Unusual circumstances that may justify delay include:

(i) The need to search for and collect the requested records from other facilities that are separate from Amtrak's headquarters offices.

(ii) The need to search for, collect, and examine a voluminous amount of separate and distinct records sought in a single request.

(iii) The need for consultation, which shall be conducted with all practicable speed, with agencies having a substantial interest in the determination of the request, or among two or more Amtrak components having a substantial subject-matter interest in the request.

(e) *Expedited processing.* (1) Requests and appeals may be taken out of order and given expedited treatment whenever it is determined that they involve a compelling need, which means:

(i) Circumstances in which the lack of expedited treatment could reasonably be expected to pose an imminent threat to the life or physical safety of an individual; and

(ii) An urgency to inform the public about an actual or alleged Amtrak activity, if made by a person primarily engaged in disseminating information.

(2) A request for expedited processing may be made at the time of the initial request for records or at a later date.

(3) A requester seeking expedited processing must submit a statement, certified to be true and correct to the best of that person's knowledge and belief, explaining in detail the basis for requesting expedited processing. This statement must accompany the request in order to be considered and responded to within the ten calendar days required for decisions on expedited access.

(4) A requester who is not a full-time member of the news media must establish that he is a person whose main professional activity or occupation is information dissemination, though it need not be his sole occupation. A requester must establish a particular urgency to inform the public about the Amtrak activity involved in the request.

(5) Within ten business days of receipt of a request for expedited processing, Amtrak shall determine whether to grant such a request and notify the requester of the decision. If a request for expedited treatment is granted, the request shall be given priority and shall be processed as soon as practicable.

(6) Amtrak shall provide prompt consideration of appeals of decisions denying expedited processing.

§ 701.8 Responses to requests.

(a) *Granting of requests.* When an initial determination is made to grant a request in whole or in part, the requesting party shall be notified in writing and advised of any fees charged under § 701.11(e). The records shall be disclosed to the requesting party promptly upon payment of applicable fees.

(b) *Adverse determination of requests*—(1) *Types of denials.* The requesting party shall be notified in writing of a determination to deny a request in any respect. Adverse determinations or denials of records consist of:

(i) A determination to withhold any requested record in whole or in part;

(ii) A determination that a requested record does not exist or cannot be located;

(iii) A denial of a request for expedited treatment; and

(iv) A determination on any disputed fee matter including a denial of a request for a fee waiver.

(2) *Deletions.* When practical, records disclosed in part shall be marked or annotated to show both the amount and location of the information deleted.

(3) *Content of denial letter.* The denial letter shall be signed by the Freedom of Information Officer or designee and shall include:

(i) A brief statement of the reason(s) for the adverse determination including any FOIA exemptions applied in denying the request;

(ii) An estimate of the volume of information withheld (number of pages or some other reasonable form of estimation). An estimate does not need to be provided if the volume is indicated through deletions on records disclosed in part, or if providing an estimate would harm an interest protected by an applicable exemption;

(iii) A statement that an appeal may be filed under § 701.10 and a description of the requirements of that section; and

(iv) The name and title or position of the person responsible for the denial.

§ 701.9 Business information.

(a) *General.* Business information held by Amtrak will be disclosed under the FOIA only under this section.

(b) *Definitions.* For purposes of this section, the following definitions apply:

(1) *Business information* means commercial or financial information held by Amtrak that may be protected from disclosure under Exemption 4 of the FOIA, 5 U.S.C. 552(b)(4).

(2) *Submitter* means any person or entity including partnerships; corporations; associations; and local, state, tribal, and foreign governments.

(c) *Designation of business information.* A submitter of business information will use good faith efforts to designate, by appropriate markings, either at the time of submission or at a reasonable time thereafter, any portions of its submission that it considers to be protected from disclosure under Exemption 4. These designations will expire ten years after the date of the submission unless the submitter requests and provides justification for a longer designation period.

(d) *Notice to submitters.* Amtrak shall provide a submitter with prompt written notice of an FOIA request or an appeal that seeks its business information when required under paragraph (e) of this section, except as provided in paragraph (h), in order to give the submitter an opportunity to object to disclosure of any specified portion of the information under paragraph (f). The notice shall either describe the business information requested or include copies of the requested records or portions of records containing the information.

(e) *When notice is required.* Notice shall be given to a submitter when:

(1) The information has been designated in good faith by the submitter as information considered protected from disclosure under Exemption 4; or

(2) Amtrak has reason to believe that the information may be protected from disclosure under Exemption 4.

(f) *Opportunity to object to disclosure.* Amtrak will allow a submitter a reasonable amount of time to respond to the notice described in paragraph (d) of this section.

(1) A detailed written statement must be submitted to Amtrak if the submitter has any objection to disclosure. The statement must specify all grounds for withholding any specified portion of the information sought under the FOIA. In the case of Exemption 4, it must show why the information is a trade secret or commercial or financial information that is privileged or confidential.

(2) In the event that a submitter fails to respond within the time specified in the notice, the submitter will be considered to have no objection to disclosure of the information sought under the FOIA.

(3) Information provided by a submitter in response to the notice may be subject to disclosure under the FOIA.

(g) *Notice of intent to disclose.* Amtrak shall consider a submitter's objections and specific grounds for disclosure in making a determination whether to disclose the information. In any instance, when a decision is made to disclose information over the objection of a submitter, Amtrak shall give the submitter written notice which shall include:

(1) A statement of the reason(s) why each of the submitter's objections to disclosure was not sustained;

(2) A description of the information to be disclosed; and

(3) A specified disclosure date, which shall be a reasonable time subsequent to the notice.

(h) *Exceptions to notice requirements.* The notice requirements of this section shall not apply if:

(1) Amtrak determines that the information should not be disclosed;

(2) The information has been published or has been officially made available to the public;

(3) Disclosure of the information is required by law (other than the FOIA);

(4) The designation made by the submitter under paragraph (c) of this section appears obviously frivolous. In such a case, Amtrak shall within a reasonable time prior to a specified disclosure date, give the submitter written notice of the final decision to disclose the information; or

(5) The information requested is not designated by the submitter as exempt from disclosure in accordance with this part, unless Amtrak has substantial reason to believe that disclosure of the information would result in competitive harm.

(i) *Notice of a FOIA lawsuit.* Whenever a FOIA requester files a lawsuit seeking to compel disclosure of business information, Amtrak shall promptly notify the submitter.

(j) *Notice to requesters.* (1) When Amtrak provides a submitter with notice and an opportunity to object to disclosure under paragraph (f) of this section, the FOIA Office shall also notify the requester(s).

(2) When Amtrak notifies a submitter of its intent to disclose requested information under paragraph (g) of this section, Amtrak shall also notify the requester(s).

(3) When a submitter files a lawsuit seeking to prevent the disclosure of business information, Amtrak shall notify the requester(s).

§ 701.10 Appeals.

(a) *Appeals of adverse determinations.* (1) The requesting party may appeal:

(i) A decision to withhold any requested record in whole or in part;

(ii) A determination that a requested record does not exist or cannot be located;

(iii) A denial of a request for expedited treatment; or

(iv) Any disputed fee matter or the denial of a request for a fee waiver.

(2) The appeal must be addressed to the President and Chief Executive Officer (CEO); National Railroad Passenger Corporation; 60 Massachusetts Avenue, N.E., Washington, D.C. 20002.

(3) The appeal must be in writing and specify the relevant facts and the basis for the appeal. The appeal letter and envelope must be marked prominently ''Freedom of Information Act Appeal'' to ensure that it is properly routed.

(4) The appeal must be received by the President's Office within thirty (30) days of the date of denial.

(5) An appeal will not be acted upon if the request becomes a matter of FOIA litigation.

(b) *Responses to appeals.* The decision on any appeal shall be made in writing.

(1) A decision upholding an adverse determination in whole or in part shall contain a statement of the reason(s) for such action, including any FOIA exemption(s) applied. The requesting party shall also be advised of the provision for judicial review of the decision contained in 5 U.S.C. 552(a)(4)(B).

(2) If the adverse determination is reversed or modified on appeal in whole or in part, the requesting party shall be notified, and the request shall be reprocessed in accordance with the decision.

(c) *When appeal is required.* The requesting party must appeal any adverse determination prior to seeking judicial review.

§ 701.11 Fees.

(a) *General.* Amtrak shall charge for processing requests under the FOIA in accordance with this section. A fee of $9.50 per quarter hour shall be charged for search and review. For information concerning other processing fees, refer to paragraph (e) of this section. Amtrak shall collect all applicable fees before releasing copies of requested records to the requesting party. Payment of fees shall be made by check or money order payable to the National Railroad Passenger Corporation.

(b) *Definitions.* For purposes of this section:

(1) *Search* means the process of looking for and retrieving records or information responsive to a request. It includes page-by-page or line-by-line identification of information within records and also includes reasonable efforts to locate and retrieve information from records maintained in electronic form or format.

(2) *Review* means the process of examining a record located in response to a request to determine whether one or more of the statutory exemptions of the FOIA apply. Processing any record for disclosure includes doing all that is necessary to redact the record and prepare it for release. Review time includes time spent considering formal objection to disclosure by a commercial submitter under § 701.9, but does not include time spent resolving general legal or policy issues regarding the application of exemptions. Review costs are recoverable even if a record ultimately is not disclosed.

(3) *Reproduction* means the making of a copy of a record or the information contained in it in order to respond to a FOIA request. Copies can take the form of paper, microform, audiovisual materials, or electronic records (*i.e.*, magnetic tape or disk) among others. Amtrak shall honor a requester's specified preference for the form or format of disclosure if the record is readily reproducible with reasonable effort in the requested form or format by the office responding to the request.

(4) *Direct costs* means those expenses actually incurred in searching for and reproducing (and, in the case of commercial use requests, reviewing) records to respond to a FOIA request. Direct costs include such costs as the salary of the employee performing the work (the basic rate of pay for the employee plus applicable benefits and the cost of operating reproduction equipment). Direct costs do not include overhead expenses such as the costs of space and heating or lighting of the facility.

(c) *Fee categories*. There are four categories of FOIA requesters for fee purposes: ''commercial use requesters,'' ''representatives of the news media,'' ''educational and non-commercial scientific institution requesters,'' and ''all other requesters.'' The categories are defined in paragraphs (c)(1) through (5), and applicable fees, which are the same for two of the categories, will be assessed as specified in paragraph (d) of this section.

(1) *Commercial requesters*. The term ''commercial use'' request refers to a request from or on behalf of a person who seeks information for a use or purpose that furthers his commercial, trade, or profit interests, including furthering those interests through litigation. Amtrak shall determine, whenever reasonably possible, the use to which a requester will put the records sought by the request. When it appears that the requesting party will put the records to a commercial use, either because of the nature of the request itself or because Amtrak has reasonable cause to doubt the stated intended use, Amtrak shall provide the requesting party with an opportunity to submit further clarification. Where a requester does not explain the use or where explanation is insufficient, Amtrak may draw reasonable inferences from the requester's identity and charge accordingly.

(2) *Representative of the news media or news media requester* refers to any person actively gathering news for an entity that is organized and operated to publish or broadcast news to the public. The term ''news'' means information that is about current events or that would be of current interest to the public. Examples of news media entities include television or radio stations broadcasting to the public at large and publishers of periodicals (but only in those instances where they can qualify as disseminators of news). For ''freelance'' journalists to be regarded as working for a news organization, they must demonstrate a solid basis for expecting publication through an organization. A publication contract would be the clearest proof, but Amtrak shall also look to the past publication record of a requester in making this determination. A request for records supporting the news dissemination function of the requester shall not be considered to be for commercial use.

(3) *Educational institution* refers to a preschool, a public or private elementary or secondary school, an institution of undergraduate higher education, an institution of graduate higher education, an institution of professional education, or an institution of vocational education that operates a program of scholarly research. To be in this category, a requester must show that the request is authorized by and is made under the auspices of a qualifying institution and that the records are not

sought for commercial use but to further scholarly research.

(4) *Noncommercial scientific institution* refers to an institution that is not operated on a ''commercial'' basis, as that term is defined in paragraph (c)(1) of this section, and that is operated solely for the purpose of conducting scientific research, the results of which are not intended to promote any particular product or industry. To be in this category, the requesting party must show that the request is authorized by and is made under the auspices of a qualifying institution and that the records are not sought for commercial use but to further scientific research.

(5) *Other requesters* refers to requesters who do not come under the purview of paragraphs (c)(1) through (4) of this section.

(d) *Assessing fees*. In responding to FOIA requests, Amtrak shall charge the following fees unless a waiver or a reduction in fees has been granted under paragraph (k) of this section:

(1) *''Commercial use'' requesters:* The full allowable direct costs for search, review, and duplication of records.

(2) *''Representatives of the news media'' and ''educational and non-commercial scientific institution'' requesters:* Duplication charges only, excluding charges for the first 100 pages.

(3) *''All other'' requesters:* The direct costs of search and duplication of records. The first 100 pages of duplication and the first two hours of search time shall be provided without charge.

(e) *Schedule of fees*—(1) *Manual searches*. Personnel search time includes time expended in either manual searches for paper records, searches using indices, review of computer search results for relevant records, and personal computer system searches.

(2) *Computer searches*. The direct costs of conducting a computer search will be charged. These direct costs will include the cost of operating a central processing unit for that portion of the operating time that is directly attributable to searching for responsive records as well as the costs of operator/programmer salary apportionable to the search.

(3) *Duplication fees*. Duplication fees will be charged all requesters subject to limitations specified in paragraph (d) of this section. Amtrak shall charge 25 cents per page for a paper photocopy of a record. For copies produced by computer (such as tapes or printouts), Amtrak will charge the direct costs, including the operator time in producing the copy. For other forms of duplication, Amtrak will charge the direct costs of that duplication.

(4) *Review fees*. Review fees will be assessed for commercial use requests. Such fees will be assessed for review conducted in making an initial determination, or upon appeal, when review is conducted to determine whether an exemption not previously considered is applicable.

(5) *Charges for other services*. The actual cost or amount shall be charged for all other types of output, production, and duplication (e.g., photographs, maps, or printed materials). Determinations of actual cost shall include the commercial cost of the media, the personnel time expended in making the item available for release, and an allocated cost for the equipment used in producing the item. The requesting party will be charged actual production costs when a commercial service is required. Items published and available through Amtrak will be made available at the publication price.

(6) *Charges for special services*. Apart from the other provisions of this section, when Amtrak chooses as a matter of discretion to provide a special service such as certifying that records are true copies or sending records by other than ordinary mail, the direct costs of providing such services shall be charged.

(f) *Commitment to pay fees*. When Amtrak determines or estimates that applicable fees will likely exceed $25.00, the requesting party will be notified of the actual or estimated amount unless a written statement has been received indicating a willingness to pay all fees. To protect requesters from large and/or unexpected fees, Amtrak will request a specific commitment when it is estimated or determined that fees will exceed $100.00. See § 701.5(d) for additional information.

(g) *Restrictions in accessing fees*—(1) *General*. Fees for search and review will

not be charged for a quarter-hour period unless more than half of that period is required.

(2) *Minimum fee.* No fees will be charged if the cost of collecting the fee is equal to or greater than the fee itself. That cost includes the costs to Amtrak for billing, receiving, recording, and processing the fee for deposit, which has been deemed to be $10.00.

(3) *Computer searches.* With the exception of requesters seeking documents for commercial use, Amtrak shall not charge fees for computer search until the cost of search equals the equivalent dollar amount of two hours of the salary of the operator performing the search.

(h) *Nonproductive searches.* Amtrak may charge for time spent for search and review even if responsive records are not located or if the records located are determined to be entirely exempt from disclosure.

(i) *Advance payments.* (1) When Amtrak estimates or determines that charges are likely to exceed $250, an advance payment of the entire fee may be required before continuing to process the request.

(2) When there is evidence that the requester may not pay the fees that would be incurred by processing the request, an advance deposit may be required. Amtrak may require the full amount due plus applicable interest and an advance payment of the full amount of anticipated fees before beginning to process a new request or continuing to process a pending request where a requester has previously failed to pay a properly charged FOIA fee within thirty (30) days of the date of billing. The time limits of the FOIA will begin only after Amtrak has received such payment.

(3) Amtrak will hold in abeyance for forty-five (45) days requests where deposits are due.

(4) Monies owed for work already completed (*i.e.*, before copies are sent to a requester) shall not be considered an advance payment.

(5) Amtrak shall not deem a request as being received in cases in which an advance deposit or payment is due, and further work will not be done until the required payment is received.

(j) *Charging interest.* Amtrak may charge interest on any unpaid bill for processing charges starting on the 31st day following the date of billing the requester. Interest charges will be assessed at the rate that Amtrak pays for short-term borrowing.

(k) *Waiver or reduction of fees*—(1) *Automatic waiver of fees.* When the costs for a FOIA request total $10.00 or less, fees shall be waived automatically for all requesters regardless of category.

(2) *Other fee waivers.* Decisions to waive or reduce fees that exceed the automatic waiver threshold shall be made on a case-by-case basis. Records responsive to a request will be furnished without charge or at below the established charge where Amtrak determines, based on all available information, that disclosure of the requested information is in the public interest because:

(i) It is likely to contribute significantly to public understanding of the operations or activities of Amtrak, and

(ii) It is not primarily in the commercial interest of the requesting party.

(3) To determine whether the fee waiver requirement in paragraph (k)(2)(i) of this section is met, Amtrak will consider the following factors:

(i) *The subject of the request—whether the subject of the requested records concerns the operations or activities of Amtrak.* The subject of the requested records must concern identifiable operations or activities of Amtrak with a connection that is direct and clear, not remote or attenuated.

(ii) *The informative value of the information to be disclosed—whether the disclosure is likely to contribute to an understanding of Amtrak operations or activities.* The disclosable portions of the requested records must be meaningfully informative about Amtrak's operations or activities in order to be found to be likely to contribute to an increased public understanding of those operations or activities. The disclosure of information that already is in the public domain, in either a duplicative or a substantially identical form, would not be as likely to contribute to such understanding where nothing new would be added to the public's understanding.

(iii) *The contribution to an understanding of the subject by the public likely to result from disclosure—whether disclosure of the requested information will contribute to public understanding.* The disclosure must contribute to the understanding of a reasonably broad audience of persons interested in the subject as opposed to the individual understanding of the requester. A requester's ability and expertise in the subject area as well as the requester's intention to effectively convey information to the public shall be considered. It shall be presumed that a representative of the news media will satisfy this consideration.

(iv) *The significance of the contribution to public understanding—whether the disclosure is likely to contribute significantly to public understanding of Amtrak operations or activities.* The public's understanding of the subject in question, as compared to the level of public understanding existing prior to the disclosure, must be enhanced by the disclosure to a significant extent.

(4) To determine whether the fee waiver requirement in paragraph (k)(2)(ii) of this section is met, Amtrak will consider the following factors:

(i) *The existence and magnitude of a commercial interest—whether the requesting party has a commercial interest that would be furthered by the requested disclosure.* Amtrak shall consider any commercial interest of the requesting party (with reference to the definition of ''commercial use'' in paragraph (c)(1) of this section), or any person on whose behalf the requesting party may be acting that would be furthered by the requested disclosure. Requesters shall be given an opportunity to provide explanatory information regarding this consideration.

(ii) *The primary interest in disclosure—whether the magnitude of the identified commercial interest of the requester is sufficiently large in comparison with the public interest in disclosure, that disclosure is ''primarily in the commercial interest of the requester.''* A fee waiver or reduction is justified where the public interest standard is satisfied and public interest is greater in magnitude than any identified commercial interest in disclosure.

(5) Requests for a fee waiver will be considered on a case-by-case basis, based upon the merits of the information provided. Where it is difficult to determine whether the request is commercial in nature, Amtrak may draw inference from the requester's identity and the circumstances of the request.

(6) Requests for a waiver or reduction of fees must address the factors listed in paragraphs (k) (3) and (4) of this section. In all cases, the burden shall be on the requesting party to present evidence of information in support of a request for a waiver of fees.

(l) *Aggregating requests.* A requester may not file multiple requests at the same time in order to avoid payment of fees. Where Amtrak reasonably believes that a requester or a group of requesters acting in concert is attempting to divide a request into a series of requests for the purpose of avoiding fees, Amtrak may aggregate those requests and charge accordingly. Amtrak may presume that multiple requests of this type made within a thirty-day period have been made in order to avoid fees. Where requests are separated by a longer period, Amtrak may aggregate them only when there exists a solid basis for determining that aggregation is warranted. Multiple requests involving unrelated matters may not be aggregated.

§ 701.12 Other rights and services.

Nothing in this part shall be construed as entitling any person, as of right, to any service or the disclosure of any record to which such person is not entitled under the FOIA.

CHAPTER VIII—NATIONAL TRANSPORTATION SAFETY BOARD

Part		*Page*
800	Organization and functions of the Board and delegations of authority	531
801	Public availability of information	537
802	Rules implementing the Privacy Act of 1974	546
803	Official seal	553
804	Rules implementing the Government in the Sunshine Act	554
805	Employee responsibilities and conduct	557
806	National security information policy and guidelines, implementing regulations	566
807	Enforcement of nondiscrimination on the basis of handicap in programs or activities conducted by the National Transportation Safety Board	567
821	Rules of practice in air safety proceedings	573
825	Rules of procedure for merchant marine appeals from decisions of the Commandant, U.S. Coast Guard	590
826	Rules implementing the Equal Access to Justice Act of 1980	592
830	Notification and reporting of aircraft accidents or incidents and overdue aircraft, and preservation of aircraft wreckage, mail, cargo, and records	598
831	Accident/incident investigation procedures	602
835	Testimony of Board employees	607
837	Production of records in legal proceedings	610
840	Rules pertaining to notification of railroad accidents	611
845	Rules of practice in transportation; accident/incident hearings and reports	613
850	Coast Guard—National Transportation Safety Board marine casualty investigations	617
851–999	[Reserved]	

PART 800—ORGANIZATION AND FUNCTIONS OF THE BOARD AND DELEGATIONS OF AUTHORITY

Subpart A—Organization and Functions

Sec.
800.1 Purpose.
800.2 Organization.
800.3 Functions.
800.4 Operation.
800.5 Office locations.
800.6 Availability of information and materials.

Subpart B—Delegations of Authority to Staff Members

800.21 Purpose.
800.22 Delegation to the Managing Director.
800.23 Delegation to the administrative law judges, Office of Administrative Law Judges.
800.24 Delegation to the General Counsel.
800.25 Delegation to the Directors of Office of Aviation Safety, Office of Railroad Safety, Office of Highway Safety, Office of Marine Safety, and Office of Pipeline and Hazardous Materials Safety.
800.26 Delegation to the Chief, Public Inquiries Branch.
800.27 Delegation to investigative officers and employees of the Board.
800.28 Delegation to the Chief Financial Officer.

APPENDIX TO PART 800—REQUEST TO THE SECRETARY OF THE DEPARTMENT OF TRANSPORTATION TO INVESTIGATE CERTAIN AIRCRAFT ACCIDENTS

AUTHORITY: Independent Safety Board Act of 1974, as amended (49 U.S.C. 1101 *et seq.*); Federal Aviation Act of 1958, as amended (49 U.S.C. 40101 *et seq.*).

SOURCE: 49 FR 26232, June 27, 1984, unless otherwise noted.

Subpart A—Organization and Functions

§ 800.1 Purpose.

This part describes the organization, functions, and operation of the National Transportation Safety Board (Board).

§ 800.2 Organization.

The Board consists of five Members appointed by the President with the advice and consent of the Senate. One of the Members is designated by the President as Chairman with the advice and consent of the Senate and one as Vice Chairman. The Members exercise various functions, powers, and duties set forth in the Federal Aviation Act of 1958, as amended (49 U.S.C. 40101 *et seq.*), and the Independent Safety Board Act of 1974, as amended (49 U.S.C. 1101 *et seq.*). The Board is an independent agency of the United States. More detailed descriptions of the Board and its work are contained in other parts of this chapter VIII, notably parts 825, 830 through 835, and 840 through 850. Various special delegations of authority from the Board and the Chairman to the staff are set forth in subpart B of this part. The Board's staff is comprised of the following principal components:

(a) The Office of the Managing Director, which assists the Chairman in the discharge of his functions as executive and administrative head of the Board; coordinates and directs the activities of the staff; is responsible for the day-to-day operation of the Board; and recommends and develops plans to achieve the Board's program objectives. The Office of the Managing Director also provides executive secretariat services to the Board.

(b) The Office of Government, Public, and Family Affairs, which supplies the Congress and Federal, State, and local government agencies with information regarding the Safety Board's activities, programs and objectives; supplies the public, the transportation industry and the news media with current, accurate information concerning the work, programs, and objectives of the Board; coordinates public and private responsibilities, including aid to survivors and families of accident victims, in the wake of transportation disasters. This Office maintains the 24-hour Communications Center, which assists in coordinating accident notification and launch operations for all modes and provides an off-hour base for family assistance functions during accident investigations.

(c) The Office of the General Counsel, which provides legal advice and assistance to the Board and its staff; prepares Board rules, opinions and/or orders, and advice to all offices on matters of legal significance; and represents the Board in judicial matters

to which the Board is a party or in which the Board is interested.

(d) The Office of Administrative Law Judges, which conducts all formal proceedings arising under the Federal Aviation Act of 1958, as amended, including proceedings involving civil penalties and suspension or revocation of certificates, and appeals from actions of the Federal Aviation Administrator in refusing to issue airman certificates.

(e) The Office of Aviation Safety, which conducts investigations of all aviation accidents within the Board's jurisdiction; prepares reports for submission to the Board and release to the public setting forth the facts and circumstances of such accidents, including a recommendation as to the probable cause(s); determines the probable cause(s) of accidents when delegated authority to do so by the Board; initiates safety recommendations to prevent future aviation accidents; participates in the investigation of accidents that occur in foreign countries and involve U.S.-registered and/or U.S.-manufactured aircraft; and conducts special investigations into selected aviation accidents involving safety issues of concern to the Board.

(f) The Office of Railroad Safety, which conducts investigations of railroad accidents within the Board's jurisdiction; prepares reports for submission to the Board and release to the public setting forth the facts and circumstances of such accidents, including a recommendation as to the probable cause(s); determines the probable cause(s) of accidents when delegated authority to do so by the Board; initiates safety recommendations to prevent future railroad accidents; and conducts special investigations into selected rail accidents involving safety issues of concern to the Board.

(g) The Office of Highway Safety, which conducts investigations of highway accidents, including railroad grade-crossing accidents, within the Board's jurisdiction; prepares reports for submission to the Board and release to the public setting forth the facts and circumstances of such accidents, including a recommendation as to the probable cause(s); determines the probable cause(s) of accidents when delegated authority to do so by the Board; initiates safety recommendations to prevent future highway accidents; and conducts special investigations into selected highway accidents involving safety issues of concern to the Board.

(h) The Office of Marine Safety, which conducts investigations of marine accidents within the Board's jurisdiction; prepares reports for submission to the Board and release to the public setting forth the facts and circumstances of such accidents, including a recommendation as to the probable cause(s); determines the probable cause(s) of accidents when delegated authority to do so by the Board; initiates safety recommendations to prevent future marine accidents; participates in the investigation of accidents that occur in foreign countries and that involve U.S.-registered vessels; and conducts special investigations into selected marine accidents involving safety issues of concern to the Board.

(i) The Office of Pipeline and Hazardous Materials Safety, which conducts investigations of pipeline and hazardous materials accidents within the Board's jurisdiction; prepares reports for submission to the Board and release to the public setting forth the facts and circumstances of such accidents, including a recommendation as to the probable cause(s); determines the probable causes of accidents when delegated authority to do so by the Board; initiates safety recommendations to prevent future pipeline and hazardous materials accidents; and conducts special investigations into selected pipeline and hazardous materials accidents involving safety issues of concern to the Board.

(j) The Office of Research and Engineering, which conducts research and carries out analytical studies and tests involving all modes, including readouts of voice and data recorders, flight path analysis and computer simulation/animation, component examination and material failure analysis; conducts safety studies of specific safety issues; performs statistical analyses of transportation accident and incident data; maintains archival records of the Board's accident investigation and

safety promotion activities and supports public access to these records; and administers the Board's information technology infrastructure, including computer systems, networks, databases, and application software.

(k) The Office of Safety Recommendations & Accomplishments, which oversees the Board's safety recommendations program, including the Board's ''MOST WANTED'' recommendations, and the Board's safety accomplishment program.

[60 FR 61488, Nov. 30, 1996, as amended at 61 FR 14521, April 2, 1995; 63 FR 71605, Dec. 29, 1998; 64 FR 5621, Feb. 4, 1999]

§ 800.3 Functions.

(a) The primary function of the Board is to promote safety in transportation. The Board is responsible for the investigation, determination of facts, conditions, and circumstances and the cause or probable cause or causes of: all accidents involving civil aircraft, and certain public aircraft; highway accidents, including railroad grade-crossing accidents, the investigation of which is selected in cooperation with the States; railroad accidents in which there is a fatality, substantial property damage, or which involve a passenger train; pipeline accidents in which there is a fatality, significant injury to the environment, or substantial property damage; and major marine casualties and marine accidents involving a public and a non-public vessel or involving Coast Guard functions. The Board makes transportation safety recommendations to Federal, State, and local agencies and private organizations to reduce the likelihood of recurrences of transportation accidents. It initiates and conducts safety studies and special investigations on matters pertaining to safety in transportation, assesses techniques and methods of accident investigation, evaluates the effectiveness of transportation safety consciousness and efficacy in preventing accidents of other Government agencies, and evaluates the adequacy of safeguards and procedures concerning the transportation of hazardous materials.

(b) Upon application of affected parties, the Board reviews in quasijudicial proceedings, conducted pursuant to the provisions of the Administrative Procedure Act, 5 U.S.C. 551 *et seq.*, denials by the Administrator of the Federal Aviation Administrator of applications for airman certificates and orders of the Administrator modifying, amending, suspending, or revoking certificates or imposing civil penalties. The Board also reviews on appeal the decisions of the Commandant, U.S. Coast Guard, on appeals from orders of administrative law judges suspending, revoking, or denying seamen licenses, certificates, or documents.

(c) The Board, as provided in Part 801 of this chapter, issues reports and orders pursuant to its duties to determine the cause or probable cause or causes of transportation accidents and to report the facts, conditions and circumstances relating to such accidents; issues opinions and/or orders after reviewing on appeal the imposition of a civil penalty or the suspension, amendment, modification, revocation, or denial of any certificate or license issued by the Secretary of the Department of Transportation (who acts through the Administrator of the Federal Aviation Administration or the Commandant of the United States Coast Guard); and issues and makes available to the public safety recommendations, safety studies, and reports of special investigations.

[60 FR 61488, Nov. 30, 1995]

§ 800.4 Operation.

In exercising its functions, duties, and responsibilities, the Board utilizes:

(a) The Board's staff, consisting of specialized offices dealing with particular areas of transportation safety and performing administrative and technical work for the Board. The staff advises the Board and performs duties for the Board that are inherent in the staff's position in the organizational structure or that the Board has delegated to it. The staff is described more fully in § 800.2.

(b) Rules published in the FEDERAL REGISTER and codified in this Title 49 of the Code of Federal Regulations. These rules may be inspected in the Board's public reference room, or purchased from the Superintendent of Documents, Government Printing Office.

(c) Procedures and policies set forth in the agency's internal directives system which govern the activities of employees and organizational components of the Board. The internal directives system is designated as the NTSB Manual and consists of instructions which are called NTSB Orders and NTSB Notices.

(d) Meetings of the Board Members conducted pursuant to the Government in the Sunshine Act.

(e) Public hearings in connection with transportation accident investigations and public hearings and oral arguments in proceedings concerned with certificates or licenses issued by the Secretary or an Administrator of the Department of Transportation. They are held at the time and place announced in the notices thereof which are served on the parties to the proceedings or published in the FEDERAL REGISTER.

[49 FR 26232, June 27, 1984, as amended at 60 FR 61489, Nov. 30, 1995]

§ 800.5 Office locations.

The principal offices of the National Transportation Safety Board are located at 490 L'Enfant Plaza East, SW., Washington, DC 20594. The Board maintains field offices in selected cities throughout the United States.

[60 FR 61489, Nov. 30, 1995]

§ 800.6 Availability of information and materials.

Part 801 of this chapter provides detailed information concerning the availability of Board documents and records. That part also provides a fee schedule and information concerning inspection and copying.

Subpart B—Delegations of Authority to Staff Members

§ 800.21 Purpose.

The purpose of this Subpart B is to publish special delegations of authority to staff members.

[60 FR 61489, Nov. 30, 1995]

§ 800.22 Delegation to the Managing Director.

(a) The Board delegates to the Managing Director the authority to:

(1) Make the final determination, on appeal, as to whether to withhold a Board record from inspection or copying, pursuant to Part 801 of this chapter.

(2) Approve for publication in the FEDERAL REGISTER notices concerning issuance of accident reports and safety recommendations and responses to safety recommendations, as required by sections 304(a)(2) and 307 of the Independent Safety Board Act of 1974 (49 U.S.C. 1131(d) and 1135(c)).

(b) The Chairman delegates to the Managing Director the authority to exercise and carry out, subject to the direction and supervision of the Chairman, the following functions vested in the Chairman:

(1) The appointment and supervision of personnel employed by the Board;

(2) The distribution of business among such personnel and among organizational components of the Board; and

(3) The use and expenditure of funds.

[60 FR 61489, Nov. 30, 1995]

§ 800.23 Delegation to the administrative law judges, Office of Administrative Law Judges.

The Board delegates to the administrative law judges the authority generally detailed in its procedural regulations at Part 821 of this chapter.

[60 FR 61489, Nov. 30, 1995]

§ 800.24 Delegation to the General Counsel.

The Board delegates to the General Counsel the authority to:

(a) Approve, disapprove, request more information, or otherwise handle requests for testimony of Board employees with respect to their participation in the investigation of accidents, and, upon receipt of notice that an employee has been subpoenaed, to make arrangements with the court either to have the employee excused from testifying or to give the employee permission to testify in accordance with the provisions of Part 835 of this Chapter.

(b) Approve or disapprove in safety enforcement proceedings, for good cause shown, requests for extensions of time or for other changes in procedural requirements subsequent to the initial decision, grant or deny requests to file additional and/or *amicus* briefs pursuant to §§ 821.9 and 821.48 of this Chapter, and raise on appeal any issue the resolution of which he deems important to the proper disposition of proceedings under § 821.49 of this Chapter.

(c) Approve or disapprove, for good cause shown, requests to extend the time for filing comments on proposed new or amended regulations.

(d) Issue regulations for the purpose of making editorial changes or corrections in the Board's rules and regulations.

(e) Issue orders staying or declining to stay, pending judicial review, orders of the Board suspending or revoking certificates, and consent to the entry of judicial stays with respect to such orders.

(f) Compromise civil penalties in the case of violations arising under The Independent Safety Board Act of 1974, as amended, or any rule, regulation, or order issued thereunder.

(g) Issue orders dismissing appeals from initial decisions of Board administrative law judges pursuant to the request of the appellant or, where the request is consensual, at the request of any party.

(h) Correct Board orders by eliminating typographical, grammatical, and similar errors, and make editorial changes therein not involving matters of substance.

(i) Take such action as appropriate or necessary adequately to compromise, settle, or otherwise represent the Board's interest in judicial or administrative actions to which the Board is a party or in which the Board is interested.

(j) Dismiss late filed notices of appeal and appeal briefs for lack of good cause.

[60 FR 61489, Nov. 30, 1995, as amended at 63 FR 71606, Dec. 29, 1998]

§ 800.25 Delegation to the Directors of Office of Aviation Safety, Office of Railroad Safety, Office of Highway Safety, Office of Marine Safety, and Office of Pipeline and Hazardous Materials Safety.

The Board delegates to the Directors of the Offices of Aviation, Railroad, Highway, Marine, and Pipeline and Hazardous Materials Safety, the authority to:

(a) Order an investigation into the facts, conditions, and circumstances of accidents that the Board has authority to investigate.

(b) Disclose factual information pertinent to all accidents or incidents as provided for in Part 801 of this chapter.

(c) Determine the probable cause(s) of accidents in which the determination is issued in the ''Brief of Accident'' format, except that the Office Director will submit the findings of the accident investigation to the Board for determination of the probable cause(s) when (1) any Board Member so requests, (2) it appears to the Office Director that, because of significant public interest, a policy issue, or a safety issue of other matter, the determination of the probable cause(s) should be made by the Board, or (3) the accident investigation will be used to support findings in a special investigation or study. Provided, that a petition for reconsideration or modification of a determination of the probable cause(s) made under § 845.41 of this Chapter shall be acted on by the Board.

(d) Consistent with Board resources, investigate accidents as provided under § 304(a) of the Independent Safety Board Act of 1974, as amended (49 U.S.C. 1131(a)) and the Appendix to this Part.

[60 FR 61489, Nov. 30, 1995, as amended at 63 FR 71606, Dec. 29, 1998]

§ 800.26 Delegation to the Chief, Public Inquiries Branch.

The Board delegates to the Chief, Public Inquiries Branch, the authority to determine, initially, the withholding of a board record from inspection or copying, pursuant to part 801 of this chapter.

[63 FR 71606, Dec. 29, 1998]

§ 800.27 Delegation to investigative officers and employees of the Board.

The Board delegates to any officer or employee of the Board designated by the Chairman of the Safety Board the authority to sign and issue subpoenas, and administer oaths and affirmations, and to take depositions or cause them to be taken in connection with the investigation of transportation accidents or incidents.

[60 FR 61490, Nov. 30, 1995]

§ 800.28 Delegation to the Chief Financial Officer.

The Board delegates to the Chief Financial Officer the authority to settle claims for money damages of $2,500 or less against the United States arising under Section 2672 of 28 United States Code (the Federal Tort Claims Act) because of acts or omissions of Board employees.

[63 FR 71606, Dec. 29, 1998]

APPENDIX TO PART 800—REQUEST TO THE SECRETARY OF THE DEPARTMENT OF TRANSPORTATION TO INVESTIGATE CERTAIN AIRCRAFT ACCIDENTS

(a) Acting pursuant to the authority vested in it by Title VII of the Federal Aviation Act of 1958 (49 U.S.C. 1441) and section 304(a)(1) of the Independent Safety Board Act of 1974, the National Transportation Safety Board (Board) hereby requests the Secretary of the Department of Transportation (Secretary) to exercise his authority subject to the terms, conditions, and limitations of Title VII and section 304(a)(1) of the Independent Safety Board Act of 1974, and as set forth below to investigate the facts, conditions, and circumstances surrounding certain fixed-wing and rotorcraft aircraft accidents and to submit a report to the Board from which the Board may make a determination of the probable cause.

(b) The authority to be exercised hereunder shall include the investigation of all civil aircraft accidents involving rotorcraft, aerial application, amateur-built aircraft, restricted category aircraft, and all fixed-wing aircraft which have a certificated maximum gross takeoff weight of 12,500 pounds or less except:

(1) Accidents in which fatal injuries have occurred to an occupant of such aircraft, but shall include accidents involving fatalities incurred as a result of aerial application operations, amateur-built aircraft operations, or restricted category aircraft operations.

(2) Accidents involving aircraft operated in accordance with the provisions of Part 135 of the Federal Air Regulations entitled ''Air Taxi Operators and Commercial Operators of Small Aircraft.''

(3) Accidents involving aircraft operated by an air carrier authorized by certificate of public convenience and necessity to engage in air transportation.

(4) Accidents involving midair collisions.

(c) *Provided,* That the Board may, through the chiefs of its field offices, or their designees who receive the initial notifications, advise the Secretary, through his appropriate designee, that the Board will assume the full responsibility for the investigation of an accident included in this request in the same manner as an accident not so included; and *Provided further,* That the Board, through the chiefs of its field offices, or their designees who receive initial notifications may request the Secretary, through his appropriate designee, to investigate an accident not included in this request, which would normally be investigated by the Board under section (b) (1) through (4) above, and in the same manner as an accident so included.

(d) *Provided,* That this authority shall not be construed to authorize the Secretary to hold public hearings or to determine the probable cause of the accident; and *Provided further,* That the Secretary will report to the Board in a form acceptable to the Board the facts, conditions, and circumstances surrounding each accident from which the Board may determine the probable cause.

(e) *And provided further,* That this request includes authority to conduct autopsies and such other tests of the remains of deceased persons aboard the aircraft at the time of the accident, who die as a result of the accident, necessary to the investigations requested hereunder and such authority may be delegated and redelegated to any official or employee of the Federal Aviation Administration (FAA). For the purpose of this provision, designated aviation examiners are not deemed to be officials or employees of the FAA.

(f) Invoking the provisions of section 701(f) of the Federal Aviation Act of 1958, and section 304(a)(1) of the Independent Safety Board Act of 1974, is necessary inasmuch as sufficient funds have not been made available to the Board to provide adequate facilities and personnel to investigate all accidents involving civil aircraft. This request, therefore, is considered to be temporary in nature and may be modified or terminated by written notice to the Secretary.

[49 FR 26232, June 27, 1984, as amended at 63 FR 71606, Dec. 29, 1998]

PART 801—PUBLIC AVAILABILITY OF INFORMATION

Subpart A—Applicability and Policy

Sec.
801.1 Applicability.
801.2 Policy.
801.3 Definitions.

Subpart B—Administration

801.10 General.
801.11 Segregability of records.
801.12 Protection of records.

Subpart C—Time Limits

801.20 Processing of records.
801.21 Initial determination.
801.22 Final determination.
801.23 Extension.

Subpart D—Accident Investigation Records

801.30 Records from accident investigations.
801.31 Public hearings regarding investigations.
801.32 Accident reports.

Subpart E—Other Board Documents

801.40 The Board's rules.
801.41 Reports to Congress.

Subpart F—Exemption from Public Disclosure

801.50 Exemptions from disclosure.
801.51 National defense and foreign policy secrets.
801.52 Internal personnel rules and practices of the NTSB.
801.53 Records exempt by statute from disclosure.
801.54 Trade secrets and commercial or financial information.
801.55 Interagency and intra-agency exchanges.
801.56 Unwarranted invasion of personal privacy.
801.57 Records compiled for law enforcement purposes.
801.58 Records for regulation of financial institutions.
801.59 Geological records.

Subpart G—Fee Schedule

801.60 Fee schedule.
801.61 Appeals of fee determinations.

AUTHORITY: Independent Safety Board Act of 1974, as amended (49 U.S.C. 1101–1155); 5 U.S.C. 551(2); Freedom of Information Act (5 U.S.C. 552); 18 U.S.C. 641 and 2071; 31 U.S.C. 3717 and 9701; Federal Records Act, 44 U.S.C. Chapters 21, 29, 31, and 33.

SOURCE: 72 FR 18915, Apr. 16, 2007, unless otherwise noted.

Subpart A—Applicability and Policy

§ 801.1 Applicability.

(a) This part contains the rules that the National Transportation Safety Board (NTSB) follows in processing requests for records under the Freedom of Information Act (FOIA), 5 U.S.C. 552. These rules should be read together with the FOIA, which provides additional information about public access to records maintained by the NTSB.

(b) This part also provides for document services and the fees for such services, pursuant to 31 U.S.C. 9701.

(c) This part applies only to records existing when the request for the information is made. The NTSB is not required to create records for the sole purpose of responding to a FOIA request.

(d) Sections 801.51 through 801.59 of this chapter describe records that are exempt from public disclosure.

§ 801.2 Policy.

(a) In implementing 5 U.S.C. 552, it is the policy of the NTSB to make information available to the public to the greatest extent possible, consistent with the mission of the NTSB. Information the NTSB routinely provides to the public as part of a regular NTSB activity (such as press releases and information disclosed on the NTSB's public Web site) may be provided to the public without compliance with this part. In addition, as a matter of policy, the NTSB may make discretionary disclosures of records or information otherwise exempt from disclosure under the FOIA whenever disclosure would not foreseeably harm an interest protected by a FOIA exemption; however, this policy does not create any right enforceable in court.

(b) Given the NTSB's stated policy of providing as much information as possible regarding general NTSB operations and releasing documents involving investigations, the NTSB strongly encourages requesters seeking information to check the NTSB's Web site for such information before submitting a FOIA request. For every investigation

in which the NTSB has determined the probable cause of an accident, the NTSB's docket management system will include a ''public docket'' containing documentation that the investigator-in-charge deemed pertinent to the investigation. Requesters may obtain these public dockets without submitting a FOIA request. The NTSB encourages all requesters to review the public docket materials *before* submitting a FOIA request.

§ 801.3 Definitions.

The following definitions shall apply in this part:

(a) ''Record'' includes any writing, drawing, map, recording, tape, film, photo, or other documentary material by which information is preserved. In this part, ''document'' and ''record'' shall have the same meaning.

(b) ''Redact'' refers to the act of making a portion of text illegible by placing a black mark on top of the text.

(c) ''Public Docket'' includes a collection of records from an accident investigation that the investigator who oversaw the investigation of that accident has deemed pertinent to determining the probable cause of the accident.

(d) ''Non-docket'' items include other records from an accident that the investigator who oversaw the investigation of that accident has deemed irrelevant or not directly pertinent to determining the probable cause of the accident.

(e) ''Chairman'' means the Chairman of the NTSB.

(f) ''Managing Director'' means the Managing Director of the NTSB.

(g) ''Requester'' means any person, as defined in 5 U.S.C. 551(2), who submits a request pursuant to the FOIA.

Subpart B—Administration

§ 801.10 General.

(a) The NTSB's Chief, Records Management Division, is responsible for the custody and control of all NTSB records required to be preserved under the Federal Records Act, 44 U.S.C. Chapters 21, 29, 31, and 33.

(b) The NTSB's FOIA Officer shall be responsible for the initial determination of whether to release records within the 20-working-day time limit, or the extension specified in the Freedom of Information Act.

(c) The NTSB's Chief, Records Management Division, shall:

(1) Maintain for public access and commercial reproduction all accident files containing aviation and surface investigators' reports, factual accident reports or group chairman reports, documentation and accident correspondence files, transcripts of public hearings, if any, and exhibits; and

(2) Maintain a public reference room, also known as a ''Reading Room,'' in accordance with 5 U.S.C. 552(a)(2). The NTSB's public reference room is located at 490 East L'Enfant Plaza, SW., Washington, DC. Other records may be available in the NTSB's Electronic Reading Room, which is located on the NTSB's Web site, found at *http://www.ntsb.gov*.

(d) Requests for documents must be made in writing to: National Transportation Safety Board, Attention: FOIA Officer CIO–40, 490 L'Enfant Plaza, SW., Washington, DC 20594–2000. All requests:

(1) Must reasonably identify the record requested. For requests regarding an investigation of a particular accident, requesters should include the date and location of the accident, as well as the NTSB investigation number. In response to broad requests for records regarding a particular investigation, the FOIA Office will notify the requester of the existence of a public docket, and state that other non-docket items may be available, or may become available, at a later date. After receiving this letter and reviewing the items in the public docket, requesters should notify the FOIA office if the items contained in the public docket suffice to fulfill their request.

(2) Must be accompanied by the fee or agreement (if any) to pay the reproduction costs shown in the fee schedule at § 801.60 of this title, and

(3) Must contain the name, address, and telephone number of the person making the request. Requesters must update their address and telephone number in writing should this information change.

(e) The envelope in which the requester submits the request should be marked prominently with the letters ''FOIA.'' If a request fails to include a citation to the FOIA, the NTSB FOIA Office will attempt to contact the requester immediately to rectify the omission and/or clarify the request. However, the 20-working-day time limit for processing shall not commence until the FOIA Office receives a complete request.

(f) The field offices of the NTSB shall not maintain, for public access, records maintained by the Chief, Records Management Division. Requests mailed to NTSB field offices will not satisfy the NTSB's requirements for submitting a FOIA request.

(g) The NTSB may work with a commercial reproduction firm to accommodate requests for reproduction of accident records from the public docket. The reproduction charges may be subject to change. The NTSB will update its FOIA Web site to reflect any such changes. Section 801.60 of this title contains a current fee schedule.

(h) The NTSB will not release records originally generated by other agencies or entities. Instead, the NTSB will refer such requests for other agencies' records to the appropriate agency, which will make a release determination upon receiving and processing the referred request.

(i) Where a requester seeks a record on behalf of another person, and the record contains that person's personal information protected by Exemption 6 of the FOIA (see section 801.56 of this title), the NTSB requires the requester to submit a notarized statement of consent from the person whose personal information is contained in the record, before the NTSB releases the record.

(j) In general, the NTSB will deny requests for records concerning a pending investigation, pursuant to appropriate exemptions under the FOIA. The FOIA Office will notify the requester of this denial, and will provide the requester with information regarding how the requester may receive information on the investigation once the investigation is complete. The NTSB discourages requesters from submitting multiple FOIA requests in a continuing effort to obtain records before an investigation is complete.

§ 801.11 Segregability of records.

The initial decision of the FOIA Officer will include a determination of segregability. If it is reasonable to do so, the exempt portions of a record will be segregated and, where necessary, redacted, and the nonexempt portions will be sent to the requester.

§ 801.12 Protection of records.

(a) No person may, without permission, remove from the place where it is made available any record made available for inspection or copying under § 801.10(c)(2) of this part. Stealing, altering, mutilating, obliterating, or destroying, in whole or in part, such a record shall be deemed a criminal offense.

(b) Section 641 of title 18 of the United States Code provides, in pertinent part, as follows:

> ''Whoever * * * steals, purloins, or knowingly converts to his use or the use of another, or without authority, sells, conveys or disposes of any record * * * or thing of value of the United States or of any department or agency thereof * * * shall be fined under this title or imprisoned not more than ten years, or both; but if the value of such property in the aggregate, combining amounts from all the counts for which the defendant is convicted in a single case, does not exceed the sum of $1,000, he shall be fined under this title or imprisoned not more than one year, or both.''

(c) Section 2071(a) of title 18 of the United States Code provides, in pertinent part, as follows:

> Whoever willfully and unlawfully conceals, removes, mutilates, obliterates, or destroys, or attempts to do so, or, with intent to do so takes and carries away any record, proceeding, map, book, paper, document, or other thing, filed or deposited * * * in any public office, or with any * * * public officer of the United States, shall be fined under this title or imprisoned not more than three years, or both.

Subpart C—Time Limits

§ 801.20 Processing of requests.

(a) The NTSB processes FOIA requests upon receipt. The NTSB FOIA Office may notify the requester that the NTSB has received the request. The

FOIA Office will then place each request on one of three tracks:

(1) Track 1: Requests for which there are no records, requests that meet the criteria for expedited processing, or requests that seek records that have been produced in response to a prior request.

(2) Track 2: Requests that do not involve voluminous records or lengthy consultations with other entities.

(3) Track 3: Requests that involve voluminous records and for which lengthy or numerous consultations are required, or those requests which may involve sensitive records.

(b) Regarding expedited processing, if a requester states that he or she has a compelling need for the expedited treatment of their request, then the NTSB FOIA Office will determine whether to expedite the request and, where appropriate, do so.

§ 801.21 Initial determination.

The NTSB FOIA Officer will make an initial determination as to whether to release a record within 20 working days (excluding Saturdays, Sundays, and legal public holidays) after the request is received. This time limit may be extended up to 10 additional working days in accordance with § 801.23 of this part. The person making the request will be notified immediately in writing of such determination. If a determination is made to release the requested record(s), such record(s) will be made available promptly. If the FOIA Officer determines not to release the record(s), the person making the request will, when he or she is notified of such determination, be advised of:

(a) The reason for the determination,

(b) the right to appeal the determination, and

(c) the name and title or positions of each person responsible for the denial of the request.

§ 801.22 Final determination.

Requesters seeking an appeal of the FOIA Officer's initial determination must send a written appeal to the NTSB's Managing Director within 20 days. The NTSB's Managing Director will determine whether to grant or deny any appeal made pursuant to § 801.21 within 20 working days (excluding Saturdays, Sundays, and legal public holidays) after receipt of such appeal, except that this time limit may be extended for as many as 10 additional working days, in accordance with § 801.23.

§ 801.23 Extension.

In unusual circumstances as specified in this section, the time limits prescribed in either § 801.21 or § 801.22, may be extended by written notice to the person making a request and setting forth the reasons for such extension and the date on which a determination is expected to be dispatched. Such notice will not specify a date that would result in an extension for more than 10 working days. As used in this paragraph, ''unusual circumstances,'' as they relate to any delay that is reasonably necessary to the proper processing of the particular request, means—

(a) The need to search for and collect the requested records from field facilities or other establishments;

(b) The need to search for, collect, and appropriately examine and process a voluminous amount of records which are the subject of a single request; or

(c) The need to consult with another agency that has a substantial interest in the disposition of the request or with two or more components of the agency having substantial subject-matter interest therein.

Subpart D—Accident Investigation Records

§ 801.30 Records from accident investigations.

Upon completion of an accident investigation, each NTSB investigator (or ''group chairman,'' depending on the investigation) shall complete a factual report with supporting documentation and include these items in the public docket for the investigation. The Chief, Records Management Division, will then make the records available to the public for inspection or production by an order for commercial copying.

§ 801.31 Public hearings regarding investigations.

Within approximately four (4) weeks after a public hearing concerning an investigation, the Chief, Records Management Division, will make available to the public the hearing transcript. On or before the date of the hearing, the Chief, Records Management Division, will make the exhibits introduced at the hearing available to the public for inspection or commercial copy order.

§ 801.32 Accident reports.

(a) The NTSB will report the facts, conditions, and circumstances, and its determination of the probable causes of U.S. civil transportation accidents, in accordance with 49 U.S.C. 1131(e).

(b) These reports may be made available for public inspection in the NTSB's public reference room and/or on the NTSB's Web site, at *http://www.ntsb.gov*.

Subpart E—Other Board Documents

§ 801.40 The Board's rules.

The NTSB's rules are published in the Code of Federal Regulations as Parts 800 through 850 of Title 49.

§ 801.41 Reports to Congress.

The NTSB submits its annual report to Congress each year, in accordance with 49 U.S.C. 1117. The report will be available on the NTSB's Web site, found at *http://www.ntsb.gov*. Interested parties may purchase the report from the Government Printing Office or review it in the NTSB's public reference room. All other reports or comments to Congress will be available in the NTSB's public reference room for inspection or by ordering a copy after issuance.

Subpart F—Exemption From Public Disclosure

§ 801.50 Exemptions from disclosure.

Title 5, United States Code section 552(a) and (b) exempt certain records from public disclosure. As stated in § 801.2 of this title, the NTSB may choose to make a discretionary release of a record that is authorized to be withheld under 5 U.S.C. 552(b), unless it determines that the release of that record would be inconsistent with the purpose of the exemption concerned. Examples of records given in §§ 801.51 through 801.58 included within a particular statutory exemption are not necessarily illustrative of all types of records covered by the applicable exemption.

§ 801.51 National defense and foreign policy secrets.

Pursuant to 5 U.S.C. 552(b)(1), national defense and foreign policy secrets established by Executive Order, as well as properly classified documents, are exempt from public disclosure. Requests to the NTSB for such records will be transferred to the source agency as appropriate, where such classified records are identified. (See, e.g., Executive Order 12,958, as amended on March 25, 2003.)

§ 801.52 Internal personnel rules and practices of the NTSB.

Pursuant to 5 U.S.C. 552(b)(2), the following records are exempt from disclosure under FOIA:

(a) Records relating solely to internal personnel rules and practices, including memoranda pertaining to personnel matters such as staffing policies, and procedures for the hiring, training, promotion, demotion, or discharge of employees, and management plans, records, or proposals relating to labor-management relations.

(b) Records regarding:

(1) Internal matters of a relatively trivial nature that have no significant public interest, and

(2) Predominantly internal matters, the release of which would risk circumvention of a statute or agency regulation.

§ 801.53 Records exempt by statute from disclosure.

Pursuant to 5 U.S.C. 552(b)(3), the NTSB will not disclose records specifically exempted from disclosure by statute (other than 5 U.S.C. 552(b)), provided that such statute:

(a) Requires that the matters be withheld from the public in such manner as to leave no discretion on the issue, or

(b) Establishes particular criteria for withholding or refers to particular types of matters to be withheld.

§ 801.54 Trade secrets and commercial or financial information.

Pursuant to 5 U.S.C. 552(b)(4), trade secrets and items containing commercial or financial information that are obtained from a person and are privileged or confidential are exempt from public disclosure.

§ 801.55 Interagency and intra-agency exchanges.

(a) Pursuant to 5 U.S.C. 552(b)(5), any record prepared by an NTSB employee for internal Government use is exempt from public disclosure to the extent that it contains—

(1) Opinions made in the course of developing official action by the NTSB but not actually made a part of that official action, or

(2) Information concerning any pending NTSB proceeding, or similar matter, including any claim or other dispute to be resolved before a court of law, administrative board, hearing officer, or contracting officer.

(b) The purpose of this section is to protect the full and frank exchange of ideas, views, and opinions necessary for the effective functioning of the NTSB. These resources must be fully and readily available to those officials upon whom the responsibility rests to take official NTSB action. Its purpose is also to protect against the premature disclosure of material that is in the developmental stage, if premature disclosure would be detrimental to the authorized and appropriate purposes for which the material is being used, or if, because of its tentative nature, the material is likely to be revised or modified before it is officially presented to the public.

(c) Examples of materials covered by this section include, but are not limited to, staff papers containing advice, opinions, or suggestions preliminary to a decision or action; preliminary notes; advance information on such things as proposed plans to procure, lease, or otherwise hire and dispose of materials, real estate, or facilities; documents exchanged in preparation for anticipated legal proceedings; material intended for public release at a specified future time, if premature disclosure would be detrimental to orderly processes of the NTSB; records of inspections, investigations, and surveys pertaining to internal management of the NTSB; and matters that would not be routinely disclosed in litigation but which are likely to be the subject of litigation.

§ 801.56 Unwarranted invasion of personal privacy.

Pursuant to 5 U.S.C. 552(b)(6), any personal, medical, or similar file is exempt from public disclosure if its disclosure would harm the individual concerned or would be a clearly unwarranted invasion of the person's personal privacy.

§ 801.57 Records compiled for law enforcement purposes.

Pursuant to 5 U.S.C. 552(b)(7), any records compiled for law or regulatory enforcement are exempt from public disclosure to the extent that disclosure would interfere with enforcement, would be an unwarranted invasion of privacy, would disclose the identity of a confidential source, would disclose investigative procedures and practices, or would endanger the life or security of law enforcement personnel.

§ 801.58 Records for regulation of financial institutions.

Pursuant to 5 U.S.C. 552(b)(8), records compiled for agencies regulating or supervising financial institutions are exempt from public disclosure.

§ 801.59 Geological records.

Pursuant to 5 U.S.C. 552(b)(9), records concerning geological wells are exempt from public disclosure.

Subpart G—Fee Schedule

§ 801.60 Fee schedule.

(a) *Authority*. Pursuant to 5 U.S.C. 552(a)(4)(i) and 52 FR 10,012 (Mar. 27, 1987), the NTSB may charge certain fees for processing requests under the FOIA in accordance with paragraph (c) of this section, except where fees are limited under paragraph (d) of this section, or where a waiver or reduction of fees is granted under paragraph (e) of

this section. The NTSB may collect all applicable fees before sending copies of requested records to a requester. A requester must pay fees in accordance with the instructions provided on the invoice the FOIA Office sends to the requester.

(b) *Definitions.* For purposes of this section:

(1) *Commercial use request* means a request from or on behalf of a person who seeks information for a use or purpose that furthers his or her commercial, trade, or profit interests. This includes the furtherance of commercial interests through litigation. When it appears that the requester will use the requested records for a commercial purpose, either because of the nature of the request or because the NTSB has reasonable cause to doubt a requester's stated use, the NTSB shall provide the requester with a reasonable opportunity to submit further clarification.

(2) *Direct costs* means those expenses that an agency actually incurs in searching for, reviewing, and duplicating records in response to a FOIA request. This includes the salaries of employees performing the work, as listed below, but does not include overhead expenses such as the costs of office space.

(3) *Duplication* means the copying of a record, or of the information contained in a record, in response to a FOIA request.

(4) *Educational institution* means a preschool, a public or private elementary or secondary school, an institution of undergraduate higher education, an institution of graduate higher education, an institution of professional education, or an institution of vocational education, that operates a program of scholarly research. In order for a requester to demonstrate that their request falls within the category of an ''educational institution,'' the requester must show that the request is authorized by the qualifying institution and that the requester does not seek the records for commercial use, but only to further scholarly research.

(5) *Representative of the news media* or ''news media requester'' means any person actively gathering news for an entity that is organized and operated to publish or broadcast news to the public. For ''freelance'' journalists to be regarded as working for a news organization, they must demonstrate a solid basis for expecting publication through that organization (for example, a journalist may submit a copy of a publication contract for which the journalist needs NTSB records).

(6) *Review* means the examination of a record located in response to a request in order to determine whether any portion of it is exempt from disclosure. ''Review'' also includes processing the record(s) for disclosure, which includes redacting and otherwise preparing releasable records for disclosure. The NTSB may require review costs even if the NTSB ultimately does not release the record(s).

(7) *Search* means the process of looking for and retrieving records or information within the scope of a request. ''Search'' includes page-by-page or line-by-line identification of information within records and also includes reasonable efforts to locate and retrieve information from records maintained in electronic form or format. The NTSB will make an effort to conduct such searches in the least expensive manner.

(c) *Fees.* In responding to FOIA requests, the NTSB will charge the following fees unless a waiver or reduction of fees has been granted under paragraph (d) of this section:

(1) *Search.* (i) The NTSB will charge search fees for all requests, unless an educational institution, a noncommercial scientific institution, or a news media representative submits a request containing adequate justification for obtaining a fee waiver. These fees, however, are subject to the limitations of paragraph (d) of this section. The NTSB may charge for time spent searching even if the NTSB does not locate any responsive record or if the NTSB withholds the record(s) located because such record(s) are exempt from disclosure.

(ii) The NTSB will charge $4.00 for each quarter of an hour spent by clerical personnel in searching for and retrieving a requested record. Where clerical personnel cannot entirely perform a search and retrieval (for example, where the identification of records within the scope of a request requires

the assistance of professional personnel), the applicable fee will instead be $7.00 for each quarter hour of search time spent by professional personnel. Where a request requires the time of managerial personnel, the fee will be $10.25 for each quarter hour of time spent by these personnel.

(2) *Duplication*. The NTSB will charge duplication fees, subject to the limitations of paragraph (d) of this section.

(i) The NTSB utilizes the services of a commercial reproduction facility for requests for duplicates of NTSB public dockets and publications.

(ii) Regarding the reproduction of non-public records in response to a FOIA request, the NTSB will charge $0.10 per page for the duplication of a standard-size paper record. For other forms of duplication, the NTSB will charge the direct costs of the duplication.

(iii) Where the NTSB certifies records upon request, the NTSB will charge the direct cost of certification.

(3) *Review*. The NTSB will charge fees for the initial review of a record to determine whether the record falls within the scope of a request, or whether the record is exempt from disclosure. Such fees will be charged to requesters who make a request for commercial purposes. The NTSB will not charge for subsequent review of the request and responsive record; for example, in general, the NTSB will not charge additional fees for review at the administrative appeal level when the NTSB has already applied an exemption. The NTSB will charge review fees at the same rate as those charged for a search under paragraph (c)(1)(ii), above.

(c) *Limitations on charging fees*. For purposes of this section:

(1) The NTSB will not charge a fee for notices, decisions, orders, etc. provided to persons acting as parties in the investigation, or where required by law to be served on a party to any proceeding or matter before the NTSB. Likewise, the NTSB will not charge fees for requests made by family members of accident victims, when the NTSB has investigated the accident that is the subject of the FOIA request.

(2) The NTSB will not charge a search fee for requests from educational institutions or representatives of the news media.

(3) The NTSB will not charge a search fee or review fee for a quarter-hour period unless more than half of that period is required for search or review.

(4) Except for requesters seeking records for commercial use, the NTSB will provide the following items *without* charge:

(i) The first 100 pages of duplication (or the cost equivalent) of a record; and

(ii) The first two hours of search (or the cost equivalent) for a record.

(5) Whenever the total fee calculated under paragraph (c) of this section is $14.00 or less for any request, the NTSB will not charge a fee.

(6) When the NTSB's FOIA Office determines or estimates that fees to be charged under this section will amount to more than $25.00, the Office will notify the requester of the actual or estimated amount of the fees, unless the requester has indicated a willingness to pay fees as high as those anticipated. If the FOIA Office is able to estimate only a portion of the expected fee, the FOIA Office will advise the requester that the estimated fee may be only a portion of the total fee. Where the FOIA Office notifies a requester that the actual or estimated fees will exceed $25.00, the NTSB will not expend additional agency resources on the request until the requester agrees in writing to pay the anticipated total fee. In circumstances involving a total fee that will exceed $250.00, the NTSB may require the requester to make an advance payment or deposit of a specific amount before beginning to process the request.

(7) The NTSB may charge interest on any unpaid bill starting on the 31st day following the date of billing the requester. Interest charges will be assessed at the rate provided at 31 U.S.C. 3717 and will accrue from the date of the billing until the NTSB receives payment. The NTSB shall follow the provisions of the Debt Collection Act of 1982 (Pub. L. 97–365, 96 Stat. 1749), as amended, and its administrative procedures, including the use of consumer reporting agencies, collection agencies, and offset.

(8) Where a requester has previously failed to pay a properly charged FOIA fee to the NTSB within 30 days of the date of billing, the NTSB may require the requester to pay the full amount due, plus any applicable interest, and to make an advance payment of the full amount of any anticipated fee, before the NTSB begins to process a new request or continues to process a pending request from that requester.

(9) Where the NTSB reasonably believes that a requester or group of requesters acting together is attempting to divide a request into multiple series of requests for the purpose of avoiding fees, the NTSB may aggregate those requests and charge accordingly.

(d) *Requirements for waiver or reduction of fees.* For fee purposes, the NTSB will determine, whenever reasonably possible, the use to which a requester will put the requested records.

(1) The NTSB will furnish records responsive to a request without charge, or at a reduced charge, where the NTSB determines, based on all available information, that the requester has shown that:

(i) Disclosure of the requested information is in the public interest because it is likely to contribute significantly to public understanding of the operations of activities of the government, and

(ii) Disclosure of the requested information is not primarily in the commercial interest or for the commercial use of the requester.

(2) In determining whether disclosure of the requested information is in the public interest, the NTSB will consider the following factors:

(i) Whether the subject of the requested records concerns identifiable operations or activities of the federal government, with a connection that is direct and clear, and not remote or attenuated. In this regard, the NTSB will consider whether a requester's use of the documents would enhance transportation safety or contribute to the NTSB's programs.

(ii) Whether the portions of a record subject to disclosure are meaningfully informative about government operations or activities. The disclosure of information already in the public domain, in either a duplicative or substantially identical form, would not be as likely to contribute to such understanding where nothing new would be added to the public's understanding.

(iii) Whether disclosure of the requested information would contribute to the understanding of a reasonably broad audience of persons interested in the subject, as opposed to the individual understanding of the requester. The NTSB will consider a requester's expertise in the subject area and ability to effectively convey information to the public.

(iv) Whether the disclosure is likely to enhance the public's understanding of government operations or activities.

(3) In determining whether the requester is primarily in the commercial interest of the requester, the NTSB will consider the following factors:

(i) The existence and magnitude of any commercial interest the requester may have, or of any person on whose behalf the requester may be acting. The NTSB will provide requesters with an opportunity in the administrative process to submit explanatory information regarding this consideration.

(ii) Whether the commercial interest is greater in magnitude than any public interest in disclosure.

(4) Additionally, the NTSB may, at its discretion, waive publication, reproduction, and search fees for qualifying foreign countries, international organizations, nonprofit public safety entities, State and Federal transportation agencies, and colleges and universities, after approval by the Chief, Records Management Division.

(5) Where only some of the records to be released satisfy the requirements for a waiver of fees, the NTSB will grant a waiver for those particular records.

(6) Requests for the waiver or reduction of fees should address the factors listed in paragraphs (e)(2) and (e)(3) of this section, insofar as they apply to each request. The NTSB will exercise its discretion to consider the cost-effectiveness of its use of administrative resources in determining whether to grant waivers or reductions of fees.

(e) Services available free of charge.

(1) The following documents are available without commercial reproduction cost until limited supplies are exhausted:

(i) Press releases;

(ii) Safety Board regulations (Chapter VIII of Title 49, Code of Federal Regulations);

(iii) Indexes to initial decisions, Board orders, opinion and orders, and staff manuals and instructions;

(iv) Safety recommendations; and

(v) NTSB Annual Reports.

(2) The NTSB public Web site, located at *http://www.ntsb.gov*, also includes an e-mail subscription service for press releases, safety recommendations, and other announcements.

§ 801.61 Appeals of fee determinations.

Requesters seeking an appeal of the FOIA Officer's fee or fee waiver determination must send a written appeal to the NTSB's Managing Director within 20 days. The NTSB's Managing Director will determine whether to grant or deny any appeal made pursuant to § 801.21 within 20 working days (excluding Saturdays, Sundays, and legal public holidays) after receipt of such appeal, except that this time limit may be extended for as many as 10 additional working days, in accordance with § 801.23.

PART 802—RULES IMPLEMENTING THE PRIVACY ACT OF 1974

Subpart A—Applicability and Policy

Sec.
802.1 Purpose and scope.
802.2 Definitions.

Subpart B—Initial Procedures and Requirements

802.5 Procedures for requests pertaining to individual records in a record system.
802.6 Types of requests and specification of records.
802.7 Requests: How, where, and when presented; verification of identity of individuals making requests; accompanying persons; and procedures for acknowledgement of requests.

Subpart C—Initial Determinations

802.8 Disclosure of requested information.

Subpart D—Correction or Amending the Record

802.10 Request for correction or amendment to record.
802.11 Agency review of requests for correction or amendment of record.
802.12 Initial adverse agency determination on correction or amendment.

Subpart E—Review of Initial Adverse Determination

802.14 Review procedure and judicial review.

Subpart F—Fees

802.15 Fees.

Subpart G—Penalties

802.18 Penalties.

Subpart H—Specific Exemptions

802.20 Security records.

AUTHORITY: Privacy Act of 1974, Pub. L. 93–579, 88 Stat. 1896 (5 U.S.C. 552a); Independent Safety Board Act of 1974, Pub. L. 93–633, 88 Stat. 2166 (49 U.S.C. 1901 et seq.); and Freedom of Information Act, Pub. L. 93–502, November 21, 1974, amending 5 U.S.C. 552.

SOURCE: 41 FR 22358, June 3, 1976, unless otherwise noted.

Subpart A—Applicability and Policy

§ 802.1 Purpose and scope.

The purpose of this part is to implement the provisions of 5 U.S.C. 552a with respect to the availability to an individual of records of the National Transportation Safety Board (NTSB) maintained on individuals. NTSB policy encompasses the safeguarding of individual privacy from any misuse of Federal records and the provision of access to individuals to NTSB records concerning them, except where such access is in conflict with the Freedom of Information Act, or other statute.

[41 FR 39758, Sept. 16, 1976]

§ 802.2 Definitions.

In this part:

Board means the five Members of the National Transportation Safety Board, or a quorum thereof;

Individual means a citizen of the United States or an alien lawfully admitted for permanent residence;

National Transportation Safety Board (NTSB) means the agency set up under the Independent Safety Board Act of 1974;

Record means any item, collection, or grouping of information about an individual that is maintained under the control of the NTSB pursuant to Federal law or in connection with the transaction of public business, including, but not limited to, education, financial transactions, medical history, and criminal or employment history, and that contains a name, or an identifying number, symbol, or other identifying particular assigned to an individual, such as a finger or voice imprint or photograph;

Routine use means the use of such record for a purpose compatible with the purpose for which it was collected, including, but not limited to, referral to law enforcement agencies of violations of the law and for discovery purposes ordered by a court referral to potential employers, and for security clearance;

Statistical record means a record in a system of records maintained for statistical research or reporting purposes only and which is not used wholly or partially in any determination concerning an identifiable individual;

System Manager means the agency official who is responsible for the policies and practices of his particular system or systems of record, as specified in the NTSB notices of systems or records; and

System of records means a group of any records under the control of the NTSB from which information is retrieved by the name of an individual or by some identifying number, symbol, or other identifying particular assigned to the individual, whether presently in existence or set up in the future.

Subpart B—Initial Procedures and Requirements

§ 802.5 Procedures for requests pertaining to individual records in a record system.

The NTSB may not disclose any record to any person or other agency, except pursuant to a written request by, or with the prior written consent of, the individual to whom the record pertains, provided the record under the control of the NTSB is maintained in a system of records from which information is retrieved by the name of the individual or by some identifying number, symbol, or other particular assigned to such individual. Written consent is not required if the disclosure is:

(a) To officers or employees of the NTSB who require the information in the official performance of their duties;

(b) Required under 5 U.S.C. 552, Freedom of Information Act;

(c) For a routine use compatible with the purpose for which it was collected;

(d) To the Bureau of the Census for uses pursuant to title 13, U.S.C.;

(e) To a recipient who has provided the NTSB with advance adequate assurance that the record will be used solely as a statistical research or reporting record and that it is to be transferred in a form not individually identifiable; or

(f) Pursuant to the order of a court of competent jurisdiction.

§ 802.6 Types of requests and specification of records.

(a) *Types of requests.* An individual may make the following request respecting records about himself maintained by NTSB in any system of records subject to the Act:

(1) Whether information concerning himself is contained in any system of records.

(2) Access to a record concerning himself. Such request may include a request to review the record and/or obtain a copy of all or any portion thereof.

(3) Correction or amendment of a record concerning himself.

(4) Accounting of disclosure to any other person or Government agency of any record concerning himself contained in any system of records controlled by NTSB, except: (i) Disclosures made pursuant to the FOIA; (ii) disclosures made within the NTSB; (iii) disclosures made to another Government agency or instrumentality for an authorized law enforcement activity pursuant to subsection (b)(7) of the Act; and (iv) disclosures expressly exempted by NTSB from the requirements of subsection (c)(3) of the Act, pursuant to subsection (k) thereof.

(b) *Specification of records.* All requests for access to records must reasonably describe the system of records and the individual's record within the

system of records in sufficient detail to permit identification of the requested record. Specific information regarding the system name, the individual's full name, and other information helpful in identifying the record or records shall be included. Requests for correction or amendment of records shall, in addition, specify the particular record involved, state the nature of the correction or amendment sought, and furnish justification for the correction or amendment.

(c) *Inadequate identification of record.* Requests which do not contain information sufficient to identify the record requested will be returned promptly to the requester, with a notice indicating what information is lacking. Individuals making requests in person will be informed of any deficiency in the specification of the records at the time the request is made. Individuals making requests in writing will be notified of any such deficiency when their request is acknowledged.

§ 802.7 Requests: How, where, and when presented; verification of identity of individuals making requests; accompanying persons; and procedures for acknowledgment of requests.

(a) *Requests—general.* Requests may be made in person or in writing. Assistance regarding requests or other matters relating to the Act may be obtained by writing to the Director, Bureau of Administration, National Transportation Safety Board, 800 Independence Avenue, SW., Washington, DC 20594. The Director, Bureau of Administration, or his designee, on request, will aid an individual in preparing an amendment to the record or to an appeal following denial of a request to amend the record, pursuant to subsection (f)(4) of the Act.

(b) *Written requests.* Written requests shall be made to the Director, Bureau of Administration at the address given above, and shall clearly state on the envelope and on the request itself, ''Privacy Act Request,'' ''Privacy Act Statement of Disagreement,'' ''Privacy Act Disclosure Accounting Request,'' ''Appeal from Privacy Act Adverse Determination,'' or ''Privacy Act Correction Request,'' as the case may be. Actual receipt by the Director, Bureau of Administration, or his designee, shall constitute receipt.

(c) *Requests made in person.* Requests may be made in person during official working hours of the NTSB at the office where the record is located, as listed in the ''Notice of Systems of Records'' for the system in which the record is contained.

(d) *Verification of identity of requester.* (1) For written requests, the requester's identity must be verified before the release of any record, unless exempted under the FOIA. This may be accomplished by adequate proof of identity in the form of a driver's license or other acceptable item of the same type.

(2) For requests in person, the requester's identity may be established by a single document bearing a photograph (such as a passport or identification badge) or by two items of identification containing name, address, and signature (such as a driver's license or credit card).

(3) Where a request is made for reproduced records which are to be delivered by mail, the request must include a notarized statement verifying the requester's identity.

(e) *Inability to provide requisite documentation of identity.* A requester who cannot provide the necessary documentation of identity may provide a notarized statement, swearing or affirming his identity and the fact that he is aware of the penalties for false statement imposed pursuant to 18 U.S.C. 1001, and subsection (i)(3) of the Act. Where requested, the Director, Bureau of Administration, or his designee, will assist the requester in formulating the necessary document.

(f) *Accompanying persons.* A requester may wish to have a person of his choice accompany him to review the requested record. Prior to the release of the record, the NTSB will require the requester to furnish the Director, Bureau of Administration or his designee, with a written statement authorizing disclosure of the record in the accompanying person's presence.

(g) *Acknowledgment of requests.* Written requests to verify the existence of, to obtain access to, or to correct or amend records about the requester maintained by NTSB in any system of

records subject to the Act, shall be acknowledged in writing by the Director, Bureau of Administration, or his designee, within 3 working days after the date of actual receipt of the request by the Director, Bureau of Administration, or his designee. The acknowledgment shall advise the requester of the need for any additional information to process the request. Wherever practicable, the acknowledgment shall notify the individual whether his request has been granted or denied. When a request is made in person, every effort will be made to determine immediately whether the request will be granted. If such decision cannot be made, the request will be processed in the same manner as a written request. Records will be made available for immediate inspection whenever possible.

[41 FR 22358, June 3, 1976, as amended at 41 FR 43154, Sept. 30, 1976]

Subpart C—Initial Determinations

§ 802.8 Disclosure of requested information.

(a) The System Manager may initially determine that the request be granted. If so, the individual making the request shall be notified orally, or in writing, and the notice shall include:

(1) A brief description of the information to be made available;

(2) The time and place where the record may be inspected, or alternatively, the procedure for delivery by mail to the requesting party;

(3) The estimated cost for furnishing copies of the record;

(4) The requirements for verification of identity;

(5) The requirements for authorizing discussion of the record in the presence of an accompanying person; and

(6) Any additional requirements needed to grant access to a specific system of records or record.

(b) Within 10 working days after actual receipt of the request by the Director, Bureau of Administration, or his designee, in appropriate cases, the requester will be informed:

(1) That the request does not reasonably describe the system of records or record sought to permit its identification, and shall set forth the additional information needed to clarify the request; or

(2) That the system of records identified does not include a record retrievable by the requester's name or other identifying particulars.

(c) The System Manager shall advise the requester within 10 working days after actual receipt of the request by the Director, Bureau of Administration, or his designee, that the request for access has been denied, and the reason for the denial, or that the determination has been made to grant the request, either in whole or in part, in which case the relevant information will be provided.

[41 FR 22358, June 3, 1976, as amended at 41 FR 43154, Sept. 30, 1976]

Subpart D—Correction or Amending the Record

§ 802.10 Request for correction or amendment to record.

All requests for correcting or amending records shall be made in writing to the Director, Bureau of Administration, National Transportation Safety Board, 800 Independence Avenue., SW., Washington, DC 20594, and shall be deemed received upon actual receipt by the Director, Bureau of Administration. The request shall clearly be marked on the envelope and in the letter with the legend that it is a ''Privacy Act Correction Request.'' The request must reasonably set forth the portion of the record which the individual contends is not accurate, relevant, timely, or complete.

[41 FR 22358, June 3, 1976, as amended at 41 FR 43154, Sept. 30, 1976]

§ 802.11 Agency review of requests for correction or amendment of record.

Within 10 working days after actual receipt of the request by the Director, Bureau of Administration, or his designee, to correct or amend the record, the System Manager shall either make the correction in whole or in part, or inform the individual of the refusal to correct or amend the record as requested, and shall present the reasons for any denials.

[41 FR 22358, June 3, 1976, as amended at 41 FR 43154, Sept. 30, 1976]

§ 802.12 Initial adverse agency determination on correction or amendment.

If the System Manager determines that the record should not be corrected or amended in whole or in part, he will forthwith make such finding in writing, after consulting with the General Counsel, or his designee. The requester shall be notified of the refusal to correct or amend the record. The notification shall be in writing, signed by the System Manager, and shall include—

(a) The reason for the denial;

(b) The name and title or position of each person responsible for the denial of the request;

(c) The appeal procedures for the individual for a review of the denial; and

(d) Notice that the denial from the System Manager is appealable within 30 days from the receipt thereof by the requester to the Board.

The System Manager is allotted 10 working days (or within such extended period as is provided in the section concerning ''unusual circumstances'' *infra*) to respond to the request for review. If the requester does not receive an answer within such time, the delay shall constitute a denial of the request and shall permit the requester immediately to appeal to the Board, or to a district court.

Subpart E—Review of Initial Adverse Determination

§ 802.14 Review procedure and judicial review.

(a) A requester may appeal from any adverse determination within 30 days after actual receipt of a denial from the System Manager. The appeal must be in writing addressed to the Chairman, National Transportation Safety Board, 800 Independence Avenue, SW., Washington, DC 20594, and shall contain a statement on the envelope and in the appeal: ''Appeal from Privacy Act Adverse Determination.''

(b) The Board shall make a determination with respect to the appeal within 30 working days after the actual receipt of the appeal by the Chairman, except as provided for in ''unusual circumstances'' infra.

(c)(1) *Review of denial of access.* If the appeal upholds the denial of access to records, the Board shall: Notify the requester in writing, explaining the Board's determination; state that the denial is a final agency action and that judicial review is available in a district court of the United States in the district where the requester resides or has his principal place of business, or where the agency records are located, or in the District of Columbia; and request a filing with the Board of a concise statement enumerating the reasons for the requester's disagreement with the denial, pursuant to subsection (g) of the Act.

(2) *Review of denial of correction or amendment.* If the appeal upholds the denial in whole or in part for correction or amendment of the record, the same notification and judicial review privileges described in paragraph (c)(1) of this section shall apply.

(d) If the denial is reversed on appeal, the Board shall notify the requester in writing of the reversal. The notice shall include a brief statement outlining those portions of the individual's record which were not accurate, relevant, timely, or complete, and corrections of the record which were made, and shall provide the individual with a courtesy copy of the corrected record.

(e) Copies of all appeals and written determinations will be furnished by the System Manager to the Board.

(f) In unusual circumstances, time limits may be extended by not more than 10 working days by written notice to the individual making the request. The notice shall include the reasons for the extension and the date on which a determination is expected to be forthcoming. ''Unusual circumstances'' as used in this section shall include circumstances where a search and collection of the requested records from field offices or other establishments are required, cases where a voluminous amount of data is involved, and cases where consultations are required with other agencies or with others having a substantial interest in the determination of the request.

(g) *Statements of Disagreement.* (1) Written Statements of Disagreement may be furnished by the individual within 30 working days of the date of

actual receipt of the final adverse determination of the Board. They shall be addressed to the Director, Bureau of Administration, National Transportation Safety Board, 800 Independence Avenue, SW., Washington, DC 20594, and shall be clearly marked, both on the statement and on the envelope, ''Privacy Act Statement of Disagreement.''

(2) The Director, Bureau of Administration, or his designee, shall be responsible for ensuring that:

(i) The Statement of Disagreement is included in the system of records in which the disputed item of information is maintained; and

(ii) The original record is marked to indicate the information disputed, the existence of the Statement of Disagreement, and its location within the relevant system of records.

(3) The Director, Bureau of Administration, or his designee, may, if he deems it appropriate, prepare a concise Statement of Explanation indicating why the requested amendments or corrections were not made. Such Statement of Explanation shall be included in the system of records in the same manner as the Statement of Disagreement. Courtesy copies of the NTSB Statement of Explanation and the notation of dispute, as marked on the original record, shall be furnished to the individual who requested correction or amendment of the record.

(h) *Notices of correction and/or amendment, or dispute.* After a record has been corrected or a Statement of Disagreement has been filed, the Director, Bureau of Administration, or his designee, shall within 30 working days thereof, advise all previous recipients of the affected record as to the correction or the filing of the Statement of Disagreement. The identity of such recipients shall be determined pursuant to an accounting of disclosures required by the Act or any other accounting previously made. Any disclosure of disputed information occurring after a Statement of Disagreement has been filed shall clearly identify the specific information disputed and shall be accompanied by a copy of the Statement of Disagreement and a copy of any NTSB Statement of Explanation.

(i) *Disclosure to others of records concerning individuals.* Neither the Board nor other NTSB personnel shall disclose any record which is contained in a system of records maintained by NTSB, by any means of communication, including oral communication, to any person, or to another Government agency, except pursuant to a written request by, or with the prior written consent, of the individual to whom the record pertains, unless disclosure of the record is:

(1) To the Board and NTSB personnel who have a need for the record in the performance of their duties;

(2) Required under the FOIA;

(3) For a routine use published in the FEDERAL REGISTER;

(4) To the Bureau of the Census for purposes of planning or carrying out a census or survey, or related activity pursuant to the provisions of title 13 of the U.S.C.;

(5) To a recipient who has provided NTSB with adequate advance written assurance that the record will be used solely as a statistical research or reporting record and that the record is transferred in a form that is not identifiable with respect to individuals;[1]

(6) To the National Archives of the United States as a record which has sufficient historical or other value to warrant its continued preservation by the U.S. Government, or to the Administrator of the General Services Administration, or his designee, for evaluation to determine whether the record has such value;

(7) To another agency or to an instrumentality of any governmental jurisdiction within or under the control of the United States for a civil or criminal law enforcement activity if the activity is authorized by law, and if the head of the agency or instrumentality has made a written request to NTSB specifying the particular portion of the

[1] The advance written statement of assurance shall state the purpose for which the record is requested and certify that it will be used only for statistical purposes. Prior to release under this paragraph, the record shall be stripped of all personally identifiable information and reviewed to ensure that the identity of any individual cannot reasonably be determined by combining two or more statistical records.

record desired and the law enforcement activity for which the record is sought;[2]

(8) To any person upon a showing of compelling circumstances affecting the health or safety of any individual;

(9) To either House of Congress or, to the extent of matter within its jurisdiction, to any committee, or subcommittee thereof, or to any joint committee of the Congress, or to any subcommittee of such joint committee;

(10) To the Comptroller General, or any of his authorized representatives, in the course of the performance of the duties of the General Accounting Office; or

(11) Pursuant to the order of a court of competent jurisdiction.

(j) *Notices of subpoenas.* When records concerning an individual are subpoenaed or otherwise disclosed pursuant to court order, the NTSB officer or employee served with the subpoena shall be responsible for assuring that the individual is notified of the disclosure within 5 days after such subpoena or other order becomes a matter of public record. The notice shall be mailed to the last known address of the individual and shall contain the following information: (1) The date the subpoena is returnable; (2) the court in which it is returnable; (3) the name and number of the case or proceeding; and (4) the nature of the information sought.

(k) *Notices of emergency disclosures.* When information concerning an individual has been disclosed to any person under compelling circumstances affecting health or safety, the NTSB officer or employee who made or authorized the disclosure shall notify the individual at his last known address within 5 days of the disclosure. The notice shall contain the following information: (1) The nature of the information disclosed; (2) the person or agency to whom the information was disclosed; (3) the date of the disclosure; and (4) the compelling circumstances justifying the disclosure.

[41 FR 22358, June 3, 1976, as amended at 41 FR 43154, Sept. 30, 1976]

Subpart F—Fees

§ 802.15 Fees.

No fees shall be charged for providing the first copy of a record, or any portion thereof, to individuals to whom the record pertains. The fee schedule for other records is the same as that appearing in the appendix to part 801 of this chapter, implementing the FOIA, as amended from time to time, except that the cost of any search for and review of the record shall not be included in any fee under this Act, pursuant to subsection (f)(5) of the Act.

Subpart G—Penalties

§ 802.18 Penalties.

(a) An individual may bring a civil action against the NTSB to correct or amend the record, or where there is a refusal to comply with an individual request or failure to maintain any record with accuracy, relevance, timeliness and completeness, so as to guarantee fairness, or failure to comply with any other provision of 5 U.S.C. 552a. The court may order the correction or amendment. It may assess against the United States reasonable attorney fees and other costs, or may enjoin the NTSB from withholding the records and order the production to the complainant, and it may assess attorney fees and costs.

(b) Where it is determined that the action was willful or intentional with respect to 5 U.S.C. 552(g)(1) (c) or (d), the United States shall be liable for the actual damages sustained, but in no case less than the sum of $1,000 and the costs of the action with attorney fees.

(c) Criminal penalties may be imposed against an officer or employee of the NTSB who fully discloses material which he knows is prohibited from disclosure, or who willfully maintains a system of records without meeting the notice requirements, or who knowingly and willfully requests or obtains any record concerning an individual from an agency under false pretenses. These

[2] A record may be disclosed to a law enforcement agency at the initiative of NTSB if criminal conduct is suspected, provided that such disclosure has been established as a routine use by publication in the FEDERAL REGISTER, and the instance of misconduct is directly related to the purpose for which the record is maintained.

offenses shall be misdemeanors with a fine not to exceed $5,000.

Subpart H—Specific Exemptions

§ 802.20 Security records.

Pursuant to, and limited by, 5 U.S.C. 552a(k)(5), the NTSB's system of records, which contains the Security Records of NTSB employees, prospective employees, and potential contractors, shall be exempt from disclosure of the material and the NTSB's handling thereof under subsections (d), (e)(1) and (e)(4) (H) and (I) of 5 U.S.C. 552a.

PART 803—OFFICIAL SEAL

Sec.
803.1 Description.
803.3 Authority to affix Seal.
803.5 Use of the Seal.

AUTHORITY: Sec. 303(c)(2), Independent Safety Board Act of 1974, Pub. L. 93–633, 88 Stat. 2168 (49 U.S.C. 1902(c)(2)).

§ 803.1 Description.

The official seal of the National Transportation Safety Board is described as follows: An American bald eagle with wings displayed, holding in his dexter (right) talon an olive branch and in his sinister (left) talon, a bundle of 13 arrows; above his head is a scroll inscribed ''E Pluribus Unum,'' bearing a shield with vertical stripes of alternating white and red, crowned by a field of blue, all within an encircling inscription ''National Transportation Safety Board.'' When illustrated in color, the background is white. The wings, the body, and the upper portion of the legs of the eagle are shades of brown; the head, neck, and tail are white; the beak, feet, and lower portion of the legs are gold. The inscription on the scroll is black. The encircling inscription is the same shade of gold as the eagle's beak. The arrows and the olive branch are a lighter shade of gold. The red and blue of the shield are national flag red and blue. The official seal of the Board, in black and white, appears below:

[43 FR 36454, Aug. 17, 1978]

§ 803.3 Authority to affix Seal.

(a) The Seal shall be in the custody and control of the Director, Bureau of Administration of the Board.

(b) The Director, Bureau of Administration may delegate and authorize redelegations of this authority.

[40 FR 30238, July 17, 1975, as amended at 41 FR 39758, Sept. 16, 1976]

§ 803.5 Use of the Seal.

(a) The Seal is the official emblem of the Board and its use is therefore permitted only as provided in this part.

(b) Use by any person or organization outside of the Board may be made only with the Board's prior written approval.

(c) Requests by any person or organization outside of the Board for permission to use the Seal must be made in writing to Director, Bureau of Administration, National Transportation Safety Board, 800 Independence Avenue, SW., Washington, DC 20594. The request must specify in detail the exact use to be made. Any permission granted shall apply only to the specific use for which it was granted.

(d) Use of the Seal shall be essentially for informational purposes. The Seal may not be used on any article or in any manner which may discredit the Seal or reflect unfavorably upon the Board, or which implies Board endorsement of commercial products or services, or of the user's or users' policies or activities. Specifically, permission

may not be granted under this section for nonofficial use—

(1) On souvenir or novelty items of an expendable nature;

(2) On toys, gifts, or premiums;

(3) As a letterhead design;

(4) On menus, matchbook covers, calendars, or similar items;

(5) To adorn civilian clothing; or

(6) On athletic clothing or equipment.

(e) Where necessary to avoid any prohibited implication or confusion as to the Board's association with the user or users, an appropriate legend will be prescribed by the Board for prominent display in connection with the permitted use.

(f) Falsely making, forging, counterfeiting, mutilating, or altering the Seal, or knowingly using or possessing with fraudulent intent any altered Seal is punishable under section 506 of Title 18, U.S.C.

[40 FR 30238, July 17, 1975, as amended at 41 FR 39758, Sept. 16, 1976]

PART 804—RULES IMPLEMENTING THE GOVERNMENT IN THE SUNSHINE ACT

Sec.

804.1 Applicability.
804.2 Policy.
804.3 Definitions.
804.4 Open meetings requirement.
804.5 Grounds on which meetings may be closed or information may be withheld.
804.6 Procedures for closing meetings, or withholding information, and requests by affected persons to close a meeting.
804.7 Procedures for public announcement of meetings.
804.8 Changes following public announcement.
804.9 Transcripts, recordings, or minutes of closed meetings.
804.10 Availability and retention of transcripts, recordings, and minutes, and applicable fees.

AUTHORITY: Government in the Sunshine Act, Pub. L. 94–409, 90 Stat. 1241 (5 U.S.C. 552b); Independent Safety Board Act of 1974, Pub. L. 93–633, 88 Stat. 2166 (49 U.S.C. 1901 et seq.).

SOURCE: 42 FR 13284, Mar. 10, 1977, unless otherwise noted.

§ 804.1 Applicability.

(a) This part implements the provisions of the Government in the Sunshine Act (5 U.S.C. 552b). These procedures apply to meetings, as defined herein, of the Members of the National Transportation Safety Board (NTSB).

(b) Requests for all documents other than the transcripts, recordings, and minutes described in § 804.9 shall continue to be governed by part 801 of the NTSB regulations (49 CFR part 801).

§ 804.2 Policy.

It is the policy of the NTSB to provide the public with the fullest practicable information regarding the decisionmaking processes of the Board, while protecting the rights of individuals and the ability of the Board to discharge its statutory functions and responsibilities. The public is invited to attend but not to participate in open meetings.

§ 804.3 Definitions.

As used in this part: *Meeting* means the deliberations of three or more Members where such deliberations determine or result in the joint conduct or disposition of official NTSB business, and includes conference telephone calls otherwise coming within the definition. A meeting does not include:

(a) Notation voting or similar consideration of business, whether by circulation of material to the Members individually in writing or by a polling of the Members individually by telephone.

(b) Deliberations by three or more Members (1) to open or to close a meeting or to release or to withhold information pursuant to § 804.6, (2) to call a meeting on less than seven days' notice as permitted by § 804.7(b), or (3) to change the subject matter or the determination to open or to close a publicly announced meeting under § 804.8(b).

(c) An internal session attended by three or more Members for which the sole purpose is to have the staff brief the Board concerning an accident, incident, or safety problem.

Member means an individual duly appointed and confirmed to the collegial body, known as ''the Board,'' which heads the NTSB.

National Transportation Safety Board (*NTSB*) means the agency set up under the Independent Safety Board Act of 1974.

[42 FR 13284, Mar. 10, 1977, as amended at 42 FR 31794, June 23, 1977]

§ 804.4 Open meetings requirement.

Members shall not jointly conduct or dispose of agency business other than in accordance with this part. Except as provided in § 804.5, every portion of every meeting of the Board shall be open to public observation.

§ 804.5 Grounds on which meetings may be closed or information may be withheld.

Except in a case where the Board finds that the public interest requires otherwise, a meeting may be closed and information pertinent to such meeting otherwise required by §§ 804.6, 804.7, and 804.8 to be disclosed to the public may be withheld if the Board properly determines that such meeting or portion thereof or the disclosure of such information is likely to:

(a) Disclose matters that are (1) specifically authorized under criteria established by an Executive Order to be kept secret in the interests of national defense or foreign policy, and (2) are in fact properly classified pursuant to such Executive Order;

(b) Relate solely to the internal personnel rules and practices of the NTSB;

(c) Disclose matters specifically exempted from disclosure by statute (other than 5 U.S.C. 552): *Provided*, That such statute (1) requires that the matters be withheld from the public in such a manner as to leave no discretion on the issue, or (2) establishes particular criteria for withholding or refers to particular types of matters to be withheld;

(d) Disclose trade secrets and commercial or financial information obtained from a person and privileged or confidential;

(e) Involve accusing any person of a crime, or formally censuring any person;

(f) Disclose information of a personal nature where disclosure would constitute a clearly unwarranted invasion of personal privacy;

(g) Disclose investigatory records compiled for law enforcement purposes, or information which if written would be contained in such records, but only to the extent that the production of such records or information would:

(1) Interfere with enforcement proceedings;

(2) Deprive a person of a right to a fair trial or an impartial adjudication;

(3) Constitute an unwarranted invasion of personal privacy;

(4) Disclose the identity of a confidential source and, in the case of a record compiled by a criminal law enforcement authority in the course of a criminal investigation, or by an agency conducting a lawful national security intelligence investigation, confidential information furnished only by the confidential source;

(5) Disclose investigative techniques and procedures; or

(6) Endanger the life or physical safety of law enforcement personnel;

(h) Disclose information contained in or related to examination, operating, or condition reports prepared by, on behalf of, or for the use of an agency responsible for the regulation or supervision of financial institutions;

(i) Disclose information the premature disclosure of which would be likely to significantly frustrate implementation of a proposed action of the NTSB: *Provided*, That the NTSB has not already disclosed to the public the content or nature of its proposed action or is not required by law to make such disclosure on its own initiative prior to taking final action on such proposal; or

(j) Specifically concern the Board's issuance of a subpoena, or the NTSB's participation in a civil action or proceeding, an action in a foreign court or international tribunal, or an arbitration, or the initiation, conduct, or disposition by the NTSB of a particular case of formal agency adjudication pursuant to the procedures in 5 U.S.C. 554 or otherwise involving a determination on the record after opportunity for a hearing.

§ 804.6 Procedures for closing meetings, or withholding information, and requests by affected persons to close a meeting.

(a) A meeting shall not be closed, or information pertaining thereto withheld, unless a majority of all Members votes to take such action. A separate vote shall be taken with respect to any action under § 804.5. A single vote is permitted with respect to a series of meetings, a portion or portions of which are proposed to be closed to the public, or with respect to any information concerning such series of meetings, so long as each meeting in such series involves the same particular subject matters and is scheduled to be held no more than thirty days after the initial meeting in such series. Each Member's vote under this paragraph shall be recorded and proxies are not permitted.

(b) Any person whose interest may be directly affected if a portion of a meeting is open may request the Board to close that portion on any of the grounds referred to in § 804.5 (e), (f), or (g). Requests, with reasons in support thereof, should be submitted to the General Counsel, National Transportation Safety Board, 800 Independence Avenue, SW., Washington, DC 20594. On motion of any Member, the Board shall determine by recorded vote whether to grant the request.

(c) Within one working day of any vote taken pursuant to this section, the NTSB shall make available a written copy of such vote reflecting the vote of each Member on the question and, if a portion of a meeting is to be closed to the public a full written explanation of its action closing the meeting and a list of all persons expected to attend and their affiliation.

(d) Before every closed meeting, the General Counsel of the NTSB shall publicly certify that, in his or her opinion, the meeting may be closed to the public and shall state each relevant exemptive provision. A copy of such certification, together with a statement of the presiding officer setting forth the time and place of the meeting and the persons present, shall be retained by the NTSB as part of the transcript, recording, or minutes required by § 804.9.

§ 804.7 Procedures for public announcement of meetings.

(a) For each meeting, the NTSB shall make public announcement, at least one week before the meeting, of the:

(1) Time of the meeting;

(2) Place of the meeting;

(3) Subject matter of the meeting;

(4) Whether the meeting is to be open or closed; and

(5) The name and business telephone number of the official designated by the NTSB to respond to requests for information about the meeting.

(b) The one week advance notice required by paragraph (a) of this section may be reduced only if:

(1) A majority of all Members determines by recorded vote that NTSB business requires that such meeting be scheduled in less than seven days; and

(2) The public announcement required by paragraph (a) of this section be made at the earliest practicable time.

(c) Immediately following each public announcement required by this section, or by § 804.8, the NTSB shall submit a notice of public announcement for publication in the FEDERAL REGISTER.

§ 804.8 Changes following public announcement.

(a) The time or place of a meeting may be changed following the public announcement only if the NTSB publicly announces such change at the earliest practicable time. Members need not approve such change.

(b) The subject matter of a meeting or the determination of the Board to open or to close a meeting, or a portion thereof, to the public may be changed following public announcement only if:

(1) A majority of all Members determines by recorded vote that NTSB business so requires and that no earlier announcement of the change was possible; and

(2) The NTSB publicly announces such change and the vote of each Member thereon at the earliest practicable time.

§ 804.9 Transcripts, recordings, or minutes of closed meetings.

Along with the General Counsel's certification and presiding officer's

statement referred to in § 804.6(d), the NTSB shall maintain a complete transcript of electronic recording adequate to record fully the proceedings of each meeting, or a portion thereof, closed to the public. The NTSB may maintain a set of minutes in lieu of such transcript or recording for meetings closed pursuant to § 804.5 (h) or (j). Such minutes shall fully and clearly describe all matters discussed and shall provide a full and accurate summary of any actions taken, and the reasons therefor, including a description of each of the views expressed on any item and the record of any rollcall vote. All documents considered in connection with any actions shall be identified in such minutes.

§ 804.10 Availability and retention of transcripts, recordings, and minutes, and applicable fees.

The NTSB shall make promptly available to the public the transcript, electronic recording, or minutes of the discussion of any item on the agenda or of any testimony received at the meeting, except for such item, or items, of discussion or testimony as determined by the NTSB to contain matters which may be withheld under the exemptive provisions of § 804.5. Copies of the nonexempt portions of the transcript or minutes, or transcription of such recordings disclosing the identity of each speaker, shall be furnished to any person at the actual cost of transcription or duplication. the NTSB shall maintain a complete verbatim copy of the transcript, a complete copy of the minutes, or a complete electronic recording of each meeting, or a portion thereof, closed to the public for at least two years after such meeting, or until one year after the conclusion of any NTSB proceeding with respect to which the meeting, or a portion thereof, was held, whichever occurs later.

PART 805—EMPLOYEE RESPONSIBILITIES AND CONDUCT

Sec.

805.735–1 Purpose.
805.735–2 Definitions.
805.735–3 Policy.
805.735–4 Financial interests of Members and employees.
805.735–5 Receipt of gifts, entertainment, and favors by Members or employees.
805.735–6 Misuse of information by Members and employees.
805.735–7 Outside activities of Members and employees.
805.735–8 Employment of family members in transportation and related enterprises.
805.735–9 Use of Government property.
805.735–10 Member and employee indebtedness.
805.735–11 Gambling, betting, and lotteries.
805.735–12 Coercion.
805.735–13 Conduct prejudicial to the Government.
805.735–14 Specific regulations for special Government employees.
805.735–15 Miscellaneous statutory provisions.
805.735–16 Statements of employment and financial interests.
805.735–17 Supplementary statements.
805.735–18 Interests of employees' relatives.
805.735–19 Information not known by employees.
805.735–20 Information not required of employees.
805.735–21 Confidentiality of statements.
805.735–22 Effect of statements on other requirements.
805.735–23 Submission of statements by special Government employees.
805.735–24 Review of financial statements.
805.735–25 Publication and interpretation.
805.735–26 Employee's complaint on filing requirements.
805.735–27 Disciplinary or remedial action.
APPENDIX I TO PART 805—MISCELLANEOUS STATUTORY PROVISIONS
APPENDIX II TO PART 805—EMPLOYEES REQUIRED TO SUBMIT STATEMENTS

AUTHORITY: E.O. 11222 of May 8, 1965, 30 FR 6469, 3 CFR 1965 Supp.; 5 CFR 735.101 *et seq.*, and 5 CFR 735.404.

SOURCE: 40 FR 30239, July 17, 1975, unless otherwise noted.

§ 805.735–1 Purpose.

This part sets forth the standards of ethical and other conduct required of all Board Members and employees, in implementation of Executive Order 11222, May 8, 1965 (30 FR 6469), and part 735 of the Civil Service Commission Regulations adopted pursuant thereto (5 CFR part 735). It also contains references to the several applicable statutes governing employee conduct, particularly Pub. L. 87–849, 76 Stat. 119 (18 U.S.C. 201 *et seq.)*, and the ''Code of Ethics for Government Service,'' House Concurrent Resolution 175, 85th Congress, 2d Session (72 Stat. B12).

§ 805.735–2 Definitions.

As used in this part.

Executive order means Executive Order 11222 of May 8, 1965 (30 FR 6469).

Members and employees means the Board Members and employees of the National Transportation Safety Board (Board) and active duty officers or enlisted members of the Armed Forces detailed to the Board, but does not include special Government employees.

Person means an individual, a corporation, a company, an association, a firm, a partnership, a society, a joint stock company, or any other organization or institution.

Special Government employee means an employee of the Board who is retained, designated, appointed, or employed to perform temporary duties, with or without compensation, for a period not to exceed 120 days during any period of 365 consecutive days, on either a full-time or intermittent basis.

[54 FR 10332, Mar. 13, 1989]

§ 805.735–3 Policy.

(a) The maintenance of unusually high standards of honesty, integrity, impartiality, and conduct by its Members and employees and special Government employees is essential to assure the proper performance of the Board's business and the maintenance of confidence by citizens in their Government. Therefore, the Board requires that its Members and employees and special Government employees adhere strictly to the highest standard of ethical conduct in all of their social, business, political and other off-the-job activities, relationships, and interests, as well as in their official actions.

(b) All Members and employees and special Government employees shall avoid situations which might result in actual or apparent misconduct or conflicts of interest.

(c) Members and employees shall avoid any action, whether or not specifically prohibited by the regulations in this part which might result in, or create the appearance of:

(1) Using public office for private gain;

(2) Giving preferential treatment to any person;

(3) Impeding Government efficiency or economy;

(4) Losing complete independence or impartiality;

(5) Making a Government decision outside official channels; or

(6) Affecting adversely the confidence of the public in the integrity of the Government.

§ 805.735–4 Financial interests of Members and employees.

(a) A Member or employee shall not:

(1) Have direct or indirect financial interests which conflict, or appear to conflict, with his assigned duties and responsibilities within the Board; or

(2) Engage in, directly or indirectly, a financial transaction as a result of, or primarily relying on, information obtained through his employment by the Board.

(b) This section does not preclude a Member or an employee from having a financial interest or engaging in financial transactions to the same extent as a private citizen not employed by the Government, so long as it is not prohibited by law, the Executive Order, 5 CFR part 735, or the regulations in this part.

§ 805.735–5 Receipt of gifts, entertainment, and favors by Members or employees.

(a) Except as provided in paragraphs (b) and (g) of this section, a Member or employee shall not solicit or accept, directly or indirectly, any gift, gratuity, favor, entertainment, loan, or any other thing of monetary value, from a person who:

(1) Has, or is seeking to obtain, contractual or other business or financial relations with the Board;

(2) Conducts operations or activities that are subject to Board jurisdiction; or

(3) Has interests that may be substantially affected by the performance or nonperformance of his official duty.

(b) The prohibitions of paragraph (a) of this section do not apply to:

(1) Obvious family or personal relationships such as those between the employee and his parents, children, or spouse, when the circumstances make it clear that those relationships rather

than the business of the persons concerned are the motivating factors;

(2) Acceptance of food and refreshments of nominal value on infrequent occasions in the ordinary course of a luncheon or dinner meeting, other meetings, or inspection tours where a Member or employee may properly be in attendance;

(3) Acceptance of unsolicited advertising or promotional material, such as pens, pencils, note pads, calendars, and other items of nominal intrinsic value;

(4) Acceptance of loans from banks or other financial institutions on customary terms to finance proper and usual activities of employees, such as home mortgage loans;

(5) Utilization by Members or employees of the services offered to the public by any of the persons specified in paragraph (a) of this section: *Provided,* That full value, as published in a carrier's tariffs, or as is customarily charged to the public, is paid therefor;

(6) Carriage without charge by a carrier, of Members or employees engaged in official duties, for safety purposes, as provided for in the Civil Aeronautics Board's regulations;

(7) Acceptance of invitations, when approved by the Chairman or the Managing Director, with respect to meals and accommodations when on official business outside the continental United States; where commercial accommodations are unavailable or inappropriate; or where refusal of the offer would be otherwise inappropriate in light of all circumstances involved; and

(8) Acceptance of an invitation addressed to the Board, when approved by the Chairman or the Managing Director, by an employee (including, where applicable, his wife or a member of his immediate family), to participate in an inaugural flight or similar ceremonial event related to transportation, and accept food, lodging, and entertainment incident thereto.

(c) Members and employees shall not solicit contributions from another Member or employee for a gift, or make a donation as a gift, to a Member or employee in a superior official position.

(d) A Member or an employee in a superior official position shall not accept a gift from an employee or employees receiving less salary than himself. However, paragraph (c) of this section and this paragraph (d) do not prohibit a voluntary gift of nominal value or a donation in a nominal amount made on a special occasion, such as marriage, illness, retirement, or transfer.

(e) Members and employees shall not accept a gift, present, decoration, or other thing from a foreign government unless authorized by Congress as provided by the Constitution and in 5 U.S.C. 7342.

(f) Members and employees may not be directly reimbursed by a person for travel on official business under agency orders. However, reimbursement in the form of a donation may be made to the Board. The Member or employee involved will be paid by the Board in accordance with applicable laws and regulations relating to reimbursement for official travel. If the Member or employee is furnished accommodations, goods, or services in kind they may be treated as a donation to the Board, and either no per diem and other travel expenses will be paid or an appropriate reduction will be made in the per diem or other travel expenses payable, depending upon the extent of the donation. No Member or employee may be reimbursed, or payment made on his behalf, for excessive personal living expenses, gifts, entertainment, or other personal benefits.

(g) Members and employees are not precluded from receiving bona fide reimbursement, unless prohibited by law, for expenses of nonofficial travel and such other necessary subsistence as is compatible with this part for private personal interests for which no Government payment or reimbursement is authorized.

[40 FR 30239, July 17, 1975, as amended at 41 FR 39758, Sept. 16, 1976]

§ 805.735–6 Misuse of information by Members and employees.

For the purpose of furthering private interest, Members and employees shall not, except as provided in § 805.735–7(c), directly or indirectly, use, or allow the use of, official information obtained through or in connection with his employment within the Board which has not been made available to the general public.

§ 805.735–7 Outside activities of Members and employees.

(a) A Member or employee shall not engage in outside employment or other outside activity not compatible with the full and proper discharge of his duties and responsibilities as an officer or employee of the Board. Before an employee can engage in outside employment or activity for profit, he shall obtain the approval of the Board's Managing Director by requesting written authorization from the Managing Director prior to engaging in such activity. Board Members desiring to engage in outside employment or activity for profit may request prior written authorization from the Chairman. Should such authorization be granted, the Member or employee has a continuing responsibility to confine himself to the scope of the authorization. If the circumstances change so as to involve a possible incompatible activity, the Member or employee must seek further authorization in order to continue in his outside employment or activity for profit. Authorization granted in specific cases may be deemed subsequently to involve an incompatible activity, and in such cases the Member or employee concerned shall be notified in writing of the cancellation of the authorization with instructions to modify or terminate the outside activity at the earliest practicable time.

(b) Incompatible activities by Members or employees include, but are not limited to:

(1) Acceptance of a fee, compensation, gift, payment of expense, or any other thing of monetary value in circumstances in which acceptance may result in, or create the appearance of, a conflict of interest; or

(2) Outside employment or activity which tends to impair his mental or physical capacity to perform in an acceptable manner his duties and responsibilities within the Board.

(c) Employees are encouraged to engage in teaching, lecturing, and writing that is not prohibited by law, the Executive order, 5 CFR part 735, or the regulations in this part. However, an employee shall not, either for or without compensation, engage in teaching, lecturing, or writing, including teaching, lecturing, or writing for the purpose of the special preparation of a person or class of persons for an examination of the Civil Service Commission or Board of Examiners for the Foreign Service, that is dependent on information obtained as a result of his employment by the Board, except when that information has been made available to the general public or will be made available on request, or when the Chairman gives written authorization for the use of nonpublic information on the basis that the use is in the public interest.

(d) Board Members, as Presidential appointees covered by section 401(a) of the Executive order, are specifically precluded by 5 CFR 735.203(c) from receiving compensation or anything of monetary value for any consultation, lecture, discussion, writing, or appearance, the subject matter of which is devoted substantially to the responsibilities, programs, or operations of their agency, or which draws substantially on official data or ideas which have not become part of the body of public information.

(e) If an activity covered by paragraphs (c) and (d) of this section is to be undertaken as official duty, expenses will be borne by the Board, and the Member or employee may not accept compensation or allow his expenses to be paid for by the person or group under whose auspices the activity is being performed. If it is determined that the activity is to be undertaken in a private capacity, the Member or employee may not use duty hours or Government facilities, but he may accept compensation, and he may use his official title if he makes it clear that he does not represent the Board.

(f) Members and employees shall not receive any salary or anything of monetary value from a private source as compensation for his services to the Board (18 U.S.C. 209).

(g) This section does not preclude a Member or employee from:

(1) Participating in the activities of national or State political parties not prohibited by law;

(2) Participating in the affairs of or acceptance of an award for a meritorious public contribution or achievement given by a charitable, religious,

professional, social, fraternal, nonprofit educational or recreational, public service, or civic organization.

[40 FR 30239, July 17, 1975, as amended at 41 FR 39758, Sept. 16, 1976]

§ 805.735–8 Employment of family members in transportation and related enterprises.

(a) No individual will be employed or retained in employment by the Board if a member of his immediate family (blood relations who are residents of the employee's household) is employed by a carrier, a person or firm representing a carrier, or a transportation trade association.

(b) Members and employees may request a waiver, modification, or postponement of the implementation of this prohibition from the Chairman and Managing Director, respectively, on the grounds of undue hardship to himself or the family member involved. The request must contain an agreement to forego any privilege to which the Board Member or employee would be entitled as a relative of the family member.

[40 FR 30239, July 17, 1975, as amended at 41 FR 39758, Sept. 16, 1976]

§ 805.735–9 Use of Government property.

Members and employees shall not, directly or indirectly, use, or allow the use of, Board property of any kind, including property leased to the Board, for other than officially approved activities. A Member or employee has a positive duty to protect and conserve Board property, including equipment, supplies, and other property entrusted to or issued to him.

§ 805.735–10 Member and employee indebtedness.

Members and employees shall pay each just financial obligation in a proper and timely manner, especially one imposed by law, such as Federal, State, or local taxes. For the purpose of this section, a ''just financial obligation'' means one acknowledged by the employee or one reduced to judgment by a court, and ''in a proper and timely manner'' means in a manner which the Board determines does not, under the circumstances, reflect adversely on the Board as his employer.

§ 805.735–11 Gambling, betting, and lotteries.

Members and employees shall not participate, while on Board-owned or leased property or while on duty for the Board, in any gambling activity, including the operation of a gambling device, conducting a lottery or pool, a game for money or property, or in selling or purchasing a numbers slip or ticket. However, this section does not preclude activities regarding solicitations conducted by an employee recreation and welfare organization among its members, for organizational support, or for benefit or welfare funds for its members, these activities having been approved under section 3 of Executive Order 10927, dated March 18, 1961.

§ 805.735–12 Coercion.

Members and employees shall not use their employment by the Board to coerce, or give the appearance of coercing, a person to provide financial benefit to themselves or another person, particularly one with whom they have family, business, or financial ties.

§ 805.735–13 Conduct prejudicial to the Government.

Members and employees shall not engage in criminal, infamous, dishonest, immoral, or notoriously disgraceful conduct, or other conduct prejudicial to the Board or to the Government.

§ 805.735–14 Specific regulations for special Government employees.

(a) *Use of Board affiliation.* A special Government employee of the Board shall not use his Government employment for a purpose that is, or gives the appearance of being, motivated by the desire for private gain for himself or another person, particularly one with whom he has family, business, or financial ties.

(b) *Use of inside information.* (1) A special Government employee shall not use inside information obtained as a result of his employment by the Board for private gain for himself or another person, either by direct action on his part or by counsel, recommendation, or

suggestion to another person, particularly one with whom he has family, business, or financial ties. For this purpose of this section, ''inside information'' means information obtained under Government authority which has not become part of the body of public information.

(2) Special Government employees may teach, lecture, or write in a manner not inconsistent with § 805.735–7(c) for employees.

(c) *Receipt of gifts, entertainment, and favors.* (1) A special Government employee, while employed by the Board or in connection with his employment, shall not receive or solicit from a person having business with the Board, anything of value such as a gift, gratuity, loan, entertainment, or favor for himself or another person, particularly one with whom he has family, business, or financial ties.

(2) The exception as set forth in § 805.735–5(b) for employees will apply with equivalent force and effect to special Government employees with regard to the prohibitions of paragraph (a) of this section.

(d) *Applicability of other provisions.* The provisions of § 805.735–9 (Use of Government property), § 805.735–11 (Gambling, betting, and lotteries), § 805.735–12 (Coercion), § 805.735–13 (Conduct prejudicial to the Government) and § 805.735–15 (Miscellaneous statutory provisions) apply to special Government employees in the same manner as to employees.

§ 805.735–15 Miscellaneous statutory provisions.

Each Member and employee shall acquaint himself with the statutory provisions in appendix I, attached hereto and made a part thereof, which relate to his ethical and other conduct as a Member and employee of the Board and the Government.

§ 805.735–16 Statements of employment and financial interests.

(a) All employees in the positions specified in appendix II, attached hereto and made a part thereof, shall submit a statement of employment and financial interests under the regulations in this part in triplicate to the Personnel Officer not later than:

(1) Ninety days after the effective date of the regulations in this part if he is employed on or before that effective date; or

(2) Thirty days after he becomes subject to the reporting requirements by occupying a position covered under paragraph (a) of this section, if he occupies the position after that effective date.

(b) An employee required to submit a statement of employment and financial interests shall submit that statement in the format prescribed by the Managing Director.

(c) Board Members are subject to separate reporting requests under section 401 of the Executive order, and are not required to file statements pursuant to this section.

[40 FR 30239, July 17, 1975, as amended at 41 FR 39758, Sept. 16, 1976]

§ 805.735–17 Supplementary statements.

Changes in, or additions to, the information contained in an employee's statement of employment and financial interests shall be reported in supplementary statements, in the format prescribed by the Managing Director, as of June 30th of each year. If there are not changes or additions, a negative report is not required. Notwithstanding the filing of the annual report required by this section, each employee shall at all times avoid acquiring a financial interest that could result, or taking an action that would result, in a violation of the conflict-of-interest provisions, 18 U.S.C. 208, or the provisions of this part.

[40 FR 30239, July 17, 1975, as amended at 41 FR 39758, Sept. 16, 1976]

§ 805.735–18 Interests of employees' relatives.

The interest of a spouse, minor child, or other members of an employee's immediate household is considered to be an interest of the employee. For the purpose of this section, ''member of an employee's household'' means those blood relations who are residents of the employee's household.

§ 805.735–19 Information not known by employees.

If any information required to be included on a statement of employment and financial interests or supplementary statement, including holdings placed in trust, is not known to the employee but is known to another person, the employee shall require that other person to submit information in his behalf.

§ 805.735–20 Information not required of employees.

An employee is not required to submit on a statement of employment and financial interests or supplementary statement, any information relating to the employee's connection with, or interest in, a professional society or a charitable, religious, social, fraternal, recreational, public service, civic, or political organization, or a similar organization not conducted as a business enterprise. For the purpose of this section, educational and other institutions doing research and development or related work, involving grants of money from or contracts with the Government, are deemed ''business enterprises'' and are required to be included in an employee's statement of employment and financial interests.

§ 805.735–21 Confidentiality of statements.

Subject to the provisions of § 805.735–24 concerning review of employee statements, each statement of employment and financial interests, and each supplementary statement, shall be held in confidence. The Personnel Officer is personally responsible for the retention of employee statements in confidence and may not disclose information from a statement or allow access to a statement, except to carry out the purpose of this part, or as the Civil Service Commission or the Chairman may determine for good cause shown.

§ 805.735–22 Effect of statements on other requirements.

The statements of employment and financial interests and supplementary statements required of employees are in addition to, and not in substitution for, or in derogation of, any similar requirement imposed by law, order, or regulation. The submission of a statement or supplementary statement by an employee does not permit him or any other person to participate in a matter in which his or the other person's participation is prohibited by law, order, or regulation.

§ 805.735–23 Submission of statements by special Government employees.

(a) A special Government employee shall submit a statement of employment and financial interests which reports:

(1) All other employment; and

(2) The financial interests of the special Government employee which the Chairman determines are relevant in the light of the duties he is to perform.

(b) A special Government employee who is a consultant or expert shall submit a statement of employment and financial interests to the Personnel Officer, in the format prescribed by the Managing Director, at the time of his employment, and shall keep his statement current throughout his period of employment by submission of supplementary statements.

(c) The Chairman may waive the requirement in paragraph (a) of this section for the submission of a statement of employment and financial interests in the case of a special Government employee who is not a consultant or an expert when it has been determined that the duties of the position held by the special Government employee are of a nature, and at such a level of responsibility, that the submission of the statement by the incumbent is not necessary to protect the integrity of the Board. For the purpose of paragraphs (b) and (c) of this section, the following are examples of special Government employees who are not consultants and experts;

(1) A physician, dentist, or allied medical specialist whose services are procured to provide care and service to patients; or

(2) A veterinarian whose services are procured to provide care and service to animals.

[40 FR 30239, July 17, 1975, as amended at 41 FR 39758, Sept. 16, 1976]

§ 805.735–24 Review of financial statements.

(a) The Personnel Officer shall review each statement of employment and financial interests submitted under the regulations in this part (other than his own, which is reviewed by the Managing Director) to determine whether conflicts of interest or apparent conflicts of interest exist. If the review, or other information from other sources, indicates a conflict between the interests of an employee or special Government employee and the performance of his services for the Board, the Personnel Officer shall forward the statement, together with a position description of the employee involved, to the General Counsel of the Board.

(b) The employee or special Government employee whose statement has been referred under the provisions of paragraph (a) of this section will receive, from the General Counsel, advice and guidance regarding the matters questioned by the Personnel Officer. He will be afforded an opportunity to explain the conflict or appearance of conflict. It is expected that most problems will be settled at this informal stage. However, if an agreement cannot be reached after consultation, the matter shall be reported by the General Counsel, after consulting with the Managing Director, to the Chairman for resolution.

(c) The Chairman may provide the employee or special Government employee concerned with an additional opportunity to explain the conflict or appearance of conflict. If the matter cannot be resolved, the Chairman may invoke the disciplinary provisions of § 805.735–27, or may decide that remedial steps shall be taken with regard to such employee or special Government employee. When the questions of conflict of interest are resolved at one of the stages of review, the reviewing official shall sign and date a copy of the employee's statement to evidence his clearance, and this statement shall thereafter be kept as provided in § 805.735–21.

[40 FR 30239, July 17, 1975, as amended at 41 FR 39758, Sept. 16, 1976]

§ 805.735–25 Publication and interpretation.

(a) The Personnel Officer of the Board shall be responsible for making the regulations in this part and all revisions thereof, and the formats for statements of employment and financial interests available to:

(1) Each Member, employee, and special Government employee at the time of issuance and at least annually thereafter;

(2) Each new Member, employee, and special Government employee of the Board at the time of his entrance on duty; and

(3) Each Member, employee, and special Government employee of the Board at such other times as circumstances warrant.

(b) The Personnel Officer shall have available for review by Members, employees, and special Government employees of the Board, copies of such laws, Executive orders, Civil Service Commission regulations and instructions, and Board regulations as may currently appertain to their standards of ethical and other conduct.

(c) The General Counsel of the Board is designated to provide counseling and assistance to interpret the regulations in this part and matters relating to ethical conduct, particularly matters subject to the provisions of the conflict-of-interest laws and other matters covered by the Executive order. These counseling services are available to all Members, employees, and special Government employees at the General Counsel's office, by appointment for consultation or by written communication.

§ 805.735–26 Employee's complaint on filing requirements.

An employee who believes that his position has been improperly included under the regulations in this part, as one requiring the submission of a statement of employment and financial interests, may request review through the Board's grievance procedure.

§ 805.735–27 Disciplinary or remedial action.

(a) A violation of the regulations in this part by an employee or special Government employee may be cause

for disciplinary action in addition to any penalty prescribed by Federal statute or regulation, except for active duty officers or enlisted members of the Armed Forces detailed to the Board in which cases disciplinary actions may be effected against such military personnel by the parent military service. Disciplinary action may take the form of a warning, suspension, demotion, or removal, depending upon the gravity of the offense.

(b) Any employee or special Government employee who is charged with a violation of the regulations in this part shall be provided an opportunity to explain the violation, or appearance of violation, to the charging authority. The charging authority shall be the Managing Director of the Board.

(c) When, after consideration of the explanation, the charging authority decides that disciplinary action is not required, he may take appropriate remedial action. Remedial action may include, but is not limited to:

(1) Changes in assigned duties;

(2) Divestment by the employee or special Government employee of any financial interest that conflicts, or appears to conflict, with the performance of his official duties; or

(3) Disqualification for a particular assignment.

(d) Remedial or disciplinary action shall be effected in accordance with any applicable laws, Executive orders, and regulations.

[40 FR 30239, July 17, 1975, as amended at 41 FR 39758, Sept. 16, 1976]

APPENDIX I TO PART 805—MISCELLANEOUS STATUTORY PROVISIONS

Each Member and employee and each special Government employee has a positive duty to acquaint himself with each statute which relates to his ethical and other conduct as an officer or employee of the National Transportation Safety Board and of the Government. Therefore, each Member and employee and each special Government employee shall acquaint himself with the following statutory and nonstatutory provisions which relate to his ethical and other conduct:

(a) House Concurrent Resolution 175, 85th Congress, 2d Session (72 Stat. B12), the ''Code of Ethics for Government Service.''

(b) Chapter 11 of Title 18, United States Code, relating to bribery, graft, and conflicts of interest (18 U.S.C. 201 through 209).

(c) The prohibition against lobbying with appropriate funds (18 U.S.C. 1913).

(d) The prohibitions against disloyalty and striking (5 U.S.C. 7311, 18 U.S.C. 1918).

(e) The prohibition against the employment of a member of a Communist organization (50 U.S.C. 784).

(f) The prohibition against:

(1) The disclosure of classified information (18 U.S.C. 798, 50 U.S.C. 783); and

(2) The disclosure of confidential information (18 U.S.C. 1905, 49 U.S.C. 1472(f)).

(g) The provision relating to the habitual use of intoxicants to excess (5 U.S.C. 8352).

(h) The prohibition against the misuse of a Government vehicle (31 U.S.C. 638a(c)).

(i) The prohibition against the misuse of the franking privilege (18 U.S.C. 1719).

(j) The prohibition against the use of deceit in an examination or personnel action in connection with Government employment (18 U.S.C. 1917).

(k) The prohibition against fraud or false statements in a Government matter (18 U.S.C. 1001).

(l) The prohibition against mutilating or destroying a public record (18 U.S.C. 2071).

(m) The prohibition against counterfeiting and forging transportation requests (18 U.S.C. 508).

(n) The prohibition against:

(1) Embezzlement of Government money or property (18 U.S.C. 641);

(2) Failing to account for public money (18 U.S.C. 643); and

(3) Embezzlement of the money or property of another person in the possession of an employee by reason of his employment (18 U.S.C. 654).

(o) The prohibition against unauthorized use of documents relating to claims from or by the Government (18 U.S.C. 285).

(p) The prohibition against political activities in subchapter III of chapter 73 of title 5, U.S.C., and 18 U.S.C. 602, 603, 607, and 608.

(q) The prohibition against an employee's acting as the agent of a foreign principal registered under the Foreign Agents Registration Act (18 U.S.C. 219).

APPENDIX II TO PART 805—EMPLOYEES REQUIRED TO SUBMIT STATEMENTS

Statements of employment and financial interests are required of the following:

(a) Employees in grades GS–16 or above, or in positions not subject to the Classification Act paid at a rate at or above the entrance rate for GS–16.

(b) Special assistants to the members.

(c) Office of the managing director:

(1) Legislative affairs officer.

(2) Program analysis officer.

(d) Attorneys in grade GS–15.

(e) Office of public affairs:

(1) Director.

(2) Deputy director.

(f) Bureau of administration:
(1) Director.
(2) Deputy director—personnel officer.
(3) Chief, operations and facilities division.
(4) Contracting specialist.
(5) Comptroller.
(6) Budget officer.
(7) Accounting officer.
(g) Division and branch chiefs within the bureaus of accident investigation, technology, and plans and programs.
(h) Chief or senior investigators, field offices.

[41 FR 39758, Sept. 16, 1976]

NOTE: The above regulation and its appendices were approved by the Civil Service Commission (OPM) on July 16, 1968, and September 13, 1972, respectively, prior to submission to the Office of the Federal Register.

PART 806—NATIONAL SECURITY INFORMATION POLICY AND GUIDELINES, IMPLEMENTING REGULATIONS

Sec.
806.1 General policy.
806.2 Applicability.
806.3 Definitions.
806.4 Mandatory review for declassification.

AUTHORITY: Sec. 304, Independent Safety Board Act of 1974, 88 Stat. 2168 (49 U.S.C. 1903). E.O. 12065, 43 FR 28949, July 3, 1978.

SOURCE: 45 FR 20104, Mar. 27, 1980, unless otherwise noted.

§ 806.1 General policy.

(a) The interests of the United States and its citizens are best served by making information regarding the affairs of Government readily available to the public. This concept of an informed citizenry is reflected in the Freedom of Information Act and in the current public information policies of the executive branch.

(b) Within the Federal Government there is some official information and material which, because it bears directly on the effectiveness of our national defense and the conduct of our foreign relations, must be subject to some constraints for the security of our Nation and the safety of our people and our allies. To protect against actions hostile to the United States, of both an overt and covert nature, it is essential that such official information and material be given only limited dissemination.

§ 806.2 Applicability.

This rule supplements Executive Order 12065 within the Board with regard to national security information. It establishes general policies and certain procedures for the classification and declassification of information which is generated, processed, and/or stored by the Board. In this connection, the Board does not have any original classification authority but infrequently does receive classified information from other agencies.

§ 806.3 Definitions.

(a) Classified information. Information or material, herein collectively termed information, that is owned by, produced for or by, or under the control of, the United States Government and that has been determined pursuant to Executive Order 12065, or prior orders, to require protection against unauthorized disclosure and that is so designated. One of the following classifications will be shown:

(1) *Top secret* means information, the unauthorized disclosure of which reasonably could be expected to cause exceptionally grave damage to the national security.

(2) *Secret* means information, the unauthorized disclosure of which reasonably could be expected to cause serious damage to national security.

(3) *Confidential* means information, the unauthorized disclosure of which reasonably could be expected to cause identifiable damage to the national security.

(b) *Foreign government information* means either: (1) Information provided to the United States by a foreign government or international organization of governments in the expectation, express or implied, that the information is to be kept in confidence; or (2) information produced by the United States pursuant to a written joint arrangement with a foreign government or international organization of governments requiring that either the information or the arrangements or both, be kept in confidence.

(c) *National security* means the national defense and foreign relations of the United States.

(d) *Declassification event* means an event which would eliminate the need for continued classification.

§ 806.4 Mandatory review for declassification.

(a) Requests for mandatory review for declassification under section 3–501 of E.O. 12065 must be in writing and should be addressed to: National Security Oversight Officer, National Transportation Safety Board, Washington, DC 20594.

(b) The requester shall be informed of the date of receipt of the request at the Board. This date will be the basis for the time limits specified by section 3–501 of E.O. 12065. If the request does not reasonably describe the information sought, the requester shall be notified that, unless additional information is provided or the request is made more specific, no further action will be taken.

(c) When the Board receives a request for information in a document which is in its custody but which was classified by another agency, it shall refer the request to the appropriate agency for review, together with a copy of the document containing the information requested, where practicable. The Board shall also notify the requester of the referral, unless the association of the reviewing agency with the information requires protection. The reviewing agency shall review the document in coordination with any other agency involved or which had a direct interest in the classification of the subject matter. The reviewing agency shall respond directly to the requester in accordance with the pertinent procedures described above and, if requested, shall notify the Board of its determination.

PART 807—ENFORCEMENT OF NONDISCRIMINATION ON THE BASIS OF HANDICAP IN PROGRAMS OR ACTIVITIES CONDUCTED BY THE NATIONAL TRANSPORTATION SAFETY BOARD

Sec.

807.101 Purpose.
807.102 Application.
807.103 Definitions.
807.104–807.109 [Reserved]
807.110 Self-evaluation.
807.111 Notice.
807.112–807.129 [Reserved]
807.130 General prohibitions against discrimination.
807.131–807.139 [Reserved]
807.140 Employment.
807.141–807.148 [Reserved]
807.149 Program accessibility: Discrimination prohibited.
807.150 Program accessibility: Existing facilities.
807.151 Program accessibility: New construction and alterations.
807.152–807.159 [Reserved]
807.160 Communications.
807.161–807.169 [Reserved]
807.170 Compliance procedures.

AUTHORITY: 29 U.S.C. 794.

SOURCE: 51 FR 4578, Feb. 5, 1986, unless otherwise noted.

§ 807.101 Purpose.

This part effectuates section 119 of the Rehabilitation, Comprehensive Services, and Developmental Disabilities Amendments of 1978, which amended section 504 of the Rehabilitation Act of 1973 to prohibit discrimination on the basis of handicap in programs or activities conducted by Executive agencies or the United States Postal Service.

§ 807.102 Application.

This part applies to all programs or activities conducted by the agency.

§ 807.103 Definitions.

For purposes of this part, the term—

Assistant Attorney General means the Assistant Attorney General, Civil Rights Division, United States Department of Justice.

Auxiliary aids means services or devices that enable persons with impaired sensory, manual, or speaking skills to have an equal opportunity to participate in, and enjoy the benefits of, programs or activities conducted by the agency. For example, auxiliary aids useful for persons with impaired vision include readers, Brailled materials, audio recordings, telecommunications devices and other similar services and devices. Auxiliary aids useful for persons with impaired hearing include telephone handset amplifiers, telephones compatible with hearing aids, telecommunication devices for deaf persons (TDD's), interpreters,

notetakers, written materials, and other similar services and devices.

Complete complaint means a written statement that contains the complainant's name and address and describes the agency's alleged discriminatory action in sufficient detail to inform the agency of the nature and date of the alleged violation of section 504. It shall be signed by the complainant or by someone authorized to do so on his or her behalf. Complaints filed on behalf of classes or third parties shall describe or identify (by name, if possible) the alleged victims of discrimination.

Facility means all or any portion of buildings, structures, equipment, roads, walks, parking lots, rolling stock or other conveyances, or other real or personal property.

Handicapped person means any person who has a physical or mental impairment that substantially limits one or more major life activities, has a record of such an impairment, or is regarded as having such an impairment.

As used in this definition, the phrase:

(1) *Physical or mental impairment* includes—

(i) Any physiological disorder or condition, cosmetic disfigurement, or anatomical loss affecting one of more of the following body systems: Neurological; musculoskeletal; special sense organs; respiratory, including speech organs; cardiovascular; reproductive; digestive; genitourinary; hemic and lymphatic; skin; and endocrine; or

(ii) Any mental or psychological disorder, such as mental retardation, organic brain syndrome, emotional or mental illness, and specific learning disabilities. The term *physical or mental impairment* includes, but is not limited to, such diseases and conditions as orthopedic, visual, speech, and hearing impairments, cerebral palsy, epilepsy, muscular dystrophy, multiple sclerosis, cancer, heart disease, diabetes, mental retardation, emotional illness, and drug addiction and alcoholism.

(2) *Major life activities* includes functions such as caring for one's self, performing manual tasks, walking, seeing, hearing, speaking, breathing, learning, and working.

(3) *Has a record of such an impairment* means has a history of, or has been misclassified as having, a mental or physical impairment that substantially limits one or more major life activities.

(4) *Is regarded as having an impairment* means—

(i) Has a physical or mental impairment that does not substantially limit major life activities but is treated by the agency as constituting such a limitation;

(ii) Has a physical or mental impairment that substantially limits major life activities only as a result of the attitudes of others toward such impairment; or

(iii) Has none of the impairments defined in subparagraph (1) of this definition but is treated by the agency as having such an impairment.

Qualified handicapped person means—

(1) With respect to any agency program or activity under which a person is required to perform services or to achieve a level of accomplishment, a handicapped person who meets the essential eligibility requirements and who can achieve the purpose of the program or activity without modifications in the program or activity that the agency can demonstrate would result in a fundamental alteration in its nature; or

(2) With respect to any other program or activity, a handicapped person who meets the essential eligibility requirements for participation in, or receipt of benefits from, that program or activity.

(3) *Qualified handicapped person* is defined for purposes of employment in 29 CFR 1613.702(f), which is made applicable to this part by § 807.140.

Section 504 means section 504 of the Rehabilitation Act of 1973 (Pub. L. 93–112, 87 Stat. 394 (29 U.S.C. 794)), as amended by the Rehabilitation Act Amendments of 1974 (Pub. L. 93–516, 88 Stat. 1617), and the Rehabilitation, Comprehensive Services, and Developmental Disabilities Amendments of 1978 (Pub. L. 95–602, 92 Stat. 2955). As used in this part, section 504 applies only to programs or activities conducted by Executive agencies and not to federally assisted programs.

[51 FR 4579, Feb. 5, 1986; 51 FR 7543, Mar. 5, 1986]

§§ 807.104–807.109 [Reserved]

§ 807.110 Self-evaluation.

(a) The agency shall, by April 9, 1987, evaluate its current policies and practices, and the effects thereof, that do not or may not meet the requirements of this part, and to the extent modification of any such policies and practices is required, the agency shall proceed to make the necessary modifications.

(b) The agency shall provide an opportunity to interested persons, including handicapped persons or organizations representing handicapped persons, to participate in the self-evaluation process by submitting comments (both oral and written).

(c) The agency shall, until three years following the completion of the self-evaluation, maintain on file and make available for public inspections:

(1) A description of areas examined and any problems identified, and

(2) A description of any modifications made.

§ 807.111 Notice.

The agency shall make available to employees, applicants, participants, beneficiaries, and other interested persons such information regarding the provisions of this part and its applicability to the programs or activities conducted by the agency, and make such information available to them in such manner as the head of the agency finds necessary to apprise such persons of the protections against discrimination assured them by section 504 and this regulation.

§§ 807.112–807.129 [Reserved]

§ 807.130 General prohibitions against discrimination.

(a) No qualified handicapped person shall, on the basis of handicap, be excluded from participation in, be denied the benefits of, or otherwise be subjected to discrimination under any program or activity conducted by the agency.

(b)(1) The agency, in providing any aid, benefit, or service, may not, directly or through contractual, licensing, or other arrangements, on the basis of handicap—

(i) Deny a qualified handicapped person the opportunity to participate in or benefit from the aid, benefit, or service;

(ii) Afford a qualified handicapped person an opportunity to participate in or benefit from the aid, benefit, or service that is not equal to that afforded others;

(iii) Provide a qualified handicapped person with an aid, benefit, or service that is not as effective in affording equal opportunity to obtain the same result, to gain the same benefit, or to reach the same level of achievement as that provided to others;

(iv) Provide different or separate aid, benefits, or services to handicapped persons or to any class of handicapped persons than is provided to others unless such action is necessary to provide qualified handicapped persons with aid, benefits, or services that are as effective as those provided to others;

(v) Deny a qualified handicapped person the opportunity to participate as a member of planning or advisory boards; or

(vi) Otherwise limit a qualified handicapped person in the enjoyment of any right, privilege, advantage, or opportunity enjoyed by others receiving the aid, benefit, or service.

(2) The agency may not deny a qualified handicapped person the opportunity to participate in programs or activities that are not separate or different, despite the existence of permissibly separate or different programs or activities.

(3) The agency may not, directly or through contractual or other arrangements, utilize criteria or methods of administration the purpose or effect of which would—

(i) Subject qualified handicapped persons to discrimination on the basis of handicap; or

(ii) Defeat or substantially impair accomplishment of the objectives of a program or activity with respect to handicapped persons.

(4) The agency may not, in determining the site or location of a facility, make selections the purpose or effect of which would—

(i) Exclude handicapped persons from, deny them the benefits of, or otherwise subject them to discrimination

under any program or activity conducted by the agency; or

(ii) Defeat or substantially impair the accomplishment of the objectives of a program or activity with respect to handicapped persons.

(5) The agency, in the selection of procurement contractors, may not use criteria that subject qualified handicapped persons to discrimination on the basis of handicap.

(c) The exclusion of nonhandicapped persons from the benefits of a program limited by Federal statute or Executive order to handicapped persons or the exclusion of a specific class of handicapped persons from a program limited by Federal statute or Executive order to a different class of handicapped persons is not prohibited by this part.

(d) The agency shall administer programs and activities in the most integrated setting appropriate to the needs of qualified handicapped persons.

§§ 807.131–807.139 [Reserved]

§ 807.140 Employment.

No qualified handicapped person shall, on the basis of handicap, be subjected to discrimination in employment under any program or activity conducted by the agency. The definitions, requirements, and procedures of section 501 of the Rehabilitation Act of 1973 (29 U.S.C. 791), as established by the Equal Employment Opportunity Commission in 29 CFR part 1613, shall apply to employment in federally conducted programs or activities.

§§ 807.141–807.148 [Reserved]

§ 807.149 Program accessibility: Discrimination prohibited.

Except as otherwise provided in § 807.150, no qualified handicapped person shall, because the agency's facilities are inaccessible to or unusable by handicapped persons, be denied the benefits of, be excluded from participation in, or otherwise be subjected to discrimination under any program or activity conducted by the agency.

§ 807.150 Program accessibility: Existing facilities.

(a) *General.* The agency shall operate each program or activity so that the program or activity, when viewed in its entirety, is readily accessible to and usable by handicapped persons. This paragraph does not—

(1) Necessarily require the agency to make each of its existing facilities accessible to and usable by handicapped persons; or

(2) Require the agency to take any action that it can demonstrate would result in a fundamental alteration in the nature of a program or activity or in undue financial and administrative burdens. In those circumstances where agency personnel believe that the proposed action would fundamentally alter the program or activity or would result in undue financial and administrative burdens, the agency has the burden of proving that compliance with § 807.150(a) would result in such alteration or burdens. The decision that compliance would result in such alteration or burdens must be made by the agency head or his or her designee after considering all agency resources available for use in the funding and operation of the conducted program or activity, and must be accompanied by a written statement of the reasons for reaching that conclusion. If an action would result in such an alteration or such burdens, the agency shall take any other action that would not result in such an alteration or such burdens but would nevertheless ensure that handicapped persons receive the benefits and services of the program or activity.

(b) *Methods.* The agency may comply with the requirements of this section through such means as redesign of equipment, reassignment of services to accessible buildings, assignment of aides to beneficiaries, home visits, delivery of services at alternate accessible sites, alteration of existing facilities and construction of new facilities, use of accessible rolling stock, or any other methods that result in making its programs or activities readily accessible to and usable by handicapped persons. The agency is nor required to make structural changes in existing facilities where other methods are effective in achieving compliance with this section. The agency, in making alterations to existing buildings, shall meet

accessibility requirements to the extent compelled by the Architectural Barriers Act of 1968, as amended (42 U.S.C. 4151–4157), and any regulations implementing it. In choosing among available methods for meeting the requirements of this section, the agency shall give priority to those methods that offer programs and activities to qualified handicapped persons in the most integrated setting appropriate.

(c) *Time period for compliance.* The agency shall comply with the obligations established under this section by June 6, 1986, except that where structural changes in facilities are undertaken, such changes shall be made by April 7, 1989, but in any event as expeditiously as possible.

(d) *Transition plan.* In the event that structural changes to facilities will be undertaken to achieve program accessibility, the agency shall develop, by October 7, 1986, a transition plan setting forth the steps necessary to complete such changes. The agency shall provide an opportunity to interested persons, including handicapped persons or organizations representing handicapped persons, to participate in the development of the transition plan by submitting comments (both oral and written). A copy of the transition plan shall be made available for public inspection. The plan shall, at a minimum—

(1) Identify physical obstacles in the agency's facilities that limit the accessibility of its programs or activities to handicapped persons;

(2) Describe in detail the methods that will be used to make the facilities accessible;

(3) Specify the schedule for taking the steps necessary to achieve compliance with this section and, if the time period of the transition plan is longer than one year, identify steps that will be taken during each year of the transition period; and

(4) Indicate the official responsible for implementation of the plan.

[51 FR 4579, Feb. 5, 1986; 51 FR 7543, Mar. 5, 1986]

§ 807.151 Program accessibility: New construction and alterations.

Each building or part of a building that is constructed or altered by, on behalf of, or for the use of the agency shall be designed, constructed, or altered so as to be readily accessible to and usable by handicapped persons. The definitions, requirements, and standards of the Architectural Barriers Act (42 U.S.C. 4151–4157), as established in 41 CFR 101–19.600 to 101–19.607, apply to buildings covered by this section.

§§ 807.152–807.159 [Reserved]

§ 807.160 Communications.

(a) The agency shall take appropriate steps to ensure effective communication with applicants, participants, personnel of other Federal entities, and members of the public.

(1) The agency shall furnish appropriate auxiliary aids where necessary to afford a handicapped person an equal opportunity to participate in, and enjoy the benefits of, a program or activity conducted by the agency.

(i) In determining what type of auxiliary aid is necessary, the agency shall give primary consideration to the requests of the handicapped person.

(ii) The agency need not provide individually prescribed devices, readers for personal use or study, or other devices of a personal nature.

(2) Where the agency communicates with applicants and beneficiaries by telephone, telecommunication devices for deaf persons (TDD's) or equally effective telecommunication systems shall be used.

(b) The agency shall ensure that interested persons, including persons with impaired vision or hearing, can obtain information as to the existence and location of accessible services, activities, and facilities.

(c) The agency shall provide signage at a primary entrance to each of its inaccessible facilities, directing users to a location at which they can obtain information about accessible facilities. The international symbol for accessibility shall be used at each primary entrance of an accessible facility.

(d) This section does not require the agency to take any action that it can demonstrate would result in a fundamental alteration in the nature of a program or activity or in undue financial and administrative burdens. In

those circumstances where agency personnel believe that the proposed action would fundamentally alter the program or activity or would result in undue financial and administrative burdens, the agency has the burden of proving that compliance with § 807.160 would result in such alteration or burdens. The decision that compliance would result in such alteration or burdens must be made by the agency head or his or her designee after considering all agency resources available for use in the funding and operation of the conducted program or activity, and must be accompanied by a written statement of the reasons for reaching that conclusion. If an action required to comply with this section would result in such an alteration or such burdens, the agency shall take any other action that would not result in such an alteration or such burdens but would nevertheless ensure that, to the maximum extent possible, handicapped persons receive the benefits and services of the program or activity.

§§ 807.161–807.169 [Reserved]

§ 807.170 Compliance procedures.

(a) Except as provided in paragraph (b) of this section, this section applies to all allegations of discrimination on the basis of handicap in programs or activities conducted by the agency.

(b) The agency shall process complaints alleging violations of section 504 with respect to employment according to the procedures established by the Equal Employment Opportunity Commission in 29 CFR part 1613 pursuant to section 501 of the Rehabilitation Act of 1973 (29 U.S.C. 791).

(c) Director, Bureau of Administration shall be responsible for coordinating implementation of this section. Complaints may be sent to Director, Bureau of Administration, 800 Independence Ave., SW., Room 802, Washington, DC 20594.

(d) The agency shall accept and investigate all complete complaints for which it has jurisdiction. All complete complaints must be filed within 180 days of the alleged act of discrimination. The agency may extend this time period for good cause.

(e) If the agency receives a complaint over which it does not have jurisdiction, it shall promptly notify the complainant and shall make reasonable efforts to refer the complaint to the appropriate government entity.

(f) The agency shall notify the Architectural and Transportation Barriers Compliance Board upon receipt of any complaint alleging that a building or facility that is subject to the Architectural Barriers Act of 1968, as amended (42 U.S.C. 4151–4157), or section 502 of the Rehabilitation Act of 1973, as amended (29 U.S.C. 792), is not readily accessible to and usable by handicapped persons.

(g) Within 180 days of the receipt of a complete complaint for which it has jurisdiction, the agency shall notify the complainant of the results of the investigation in a letter containing—

(1) Findings of fact and conclusions of law;

(2) A description of a remedy for each violation found;

(3) A notice of the right to appeal.

(h) Appeals of the findings of fact and conclusions of law or remedies must be filed by the complainant within 90 days of receipt from the agency of the letter required by § 807.170(g). The agency may extend this time for good cause.

(i) Timely appeals shall be accepted and processed by the head of the agency.

(j) The head of the agency shall notify the complainant of the results of the appeal within 60 days of the receipt of the request. If the head of the agency determines that additional information is needed from the complainant, he or she shall have 60 days from the date of receipt of the additional information to make his or her determination on the appeal.

(k) The time limits cited in paragraphs (g) and (j) of this section may be extended with the permission of the Assistant Attorney General.

(l) The agency may delegate its authority for conducting complaint investigations to other Federal agencies, except that the authority for making the final determination may not be delegated to another agency.

[51 FR 4579, Feb. 5, 1986, as amended at 51 FR 4579, Feb. 5, 1986]

PART 821—RULES OF PRACTICE IN AIR SAFETY PROCEEDINGS

Subpart A—General Provisions

Sec.
821.1 Definitions.
821.2 Applicability and description of part.
821.3 Description of docket numbering system.

Subpart B—General Rules Applicable to Petitions for Review, Appeals to the Board, and Appeals from Law Judges' Initial Decisions and Appealable Orders

821.6 Appearances and rights of witnesses.
821.7 Filing of documents with the Board.
821.8 Service of documents.
821.9 Intervention and amicus appearance.
821.10 Computation of time.
821.11 Extensions of time.
821.12 Amendment and withdrawal of pleadings.
821.13 Waivers.
821.14 Motions.
821.15 Motion to disqualify a Board Member.
821.16 Interlocutory appeals from law judges' rulings on motions.
821.17 Motions to dismiss, for judgment on the pleadings and for summary judgment.
821.18 Motion for a more definite statement.
821.19 Depositions and other discovery.
821.20 Subpoenas, witness fees, and appearances of Board Members, officers and employees.
821.21 Official notice.

Subpart C—Special Rules Applicable to Proceedings Under 49 U.S.C. 44703

821.24 Initiation of proceeding.
821.25 Burden of proof.
821.26 Motion to dismiss petition for review for lack of standing.

Subpart D—Special Rules Applicable to Proceedings Under 49 U.S.C. 44709

821.30 Initiation of proceeding.
821.31 Complaint procedure.
821.32 Burden of proof.
821.33 Motion to dismiss stale complaint.

Subpart E—Law Judges

821.35 Assignment, duties and powers.

Subpart F—Hearing

821.37 Notice of hearing.
821.38 Evidence.
821.39 Argument and submissions.
821.40 Record.

Subpart G—Initial Decision

821.42 Initial decision by law judge.
821.43 Effect of law judge's initial decision or appealable order and appeal therefrom.

Subpart H—Appeal from Initial Decision

821.47 Notice of appeal.
821.48 Briefs and oral argument.
821.49 Issues on appeal.
821.50 Petition for rehearing, reargument, reconsideration or modification of an order of the Board.

Subpart I—Special Rules Applicable to Proceedings Involving Emergency and Other Immediately Effective Orders

821.52 General.
821.53 Appeal.
821.54 Petition for review of Administrator's determination of emergency.
821.55 Complaint, answer to complaint, motions and discovery.
821.56 Hearing and initial decision or appealable order of law judge.
821.57 Procedure on appeal.

Subpart J—Ex Parte Communications

821.60 Definitions.
821.61 Prohibited ex parte communications.
821.62 Procedures for handling ex parte communications.
821.63 Requirement to show cause and imposition of sanction.

Subpart K—Judicial Review of Board Orders

821.64 Judicial review.

AUTHORITY: 49 U.S.C. 1101–1155, 44701–44723, 46301; unless otherwise noted.

SOURCE: 68 FR 22625, Apr. 29, 2003, unless otherwise noted.

Subpart A—General Provisions

§ 821.1 Definitions.

(a) As used in this part:

Administrator means the Administrator of the Federal Aviation Administration (FAA);

Airman certificate means any certificate issued by the FAA to an airman, and shall include medical certificates required for airmen;

Appeal from an initial decision means a request to the Board to review a law judge's decision;

Appeal to the Board means a request to the Board for the review by a law judge of an order of the Administrator;

Appealable order means an order of a law judge that has the effect of terminating the proceeding, such as one granting a motion to dismiss in lieu of an answer, as provided in § 821.17, or one granting a motion for judgment on the pleadings or summary judgment. *Appealable order* does not include an order granting in part a motion to dismiss and requiring an answer to any remaining allegation or allegations, an order granting in part judgment on the pleadings or summary judgment, or a ruling on an interlocutory matter;

Board means the National Transportation Safety Board;

Case Manager means the officer of the Board's Office of Administrative Law Judges responsible for the processing of cases within that office;

Certificate means any certificate issued by the Administrator under 49 U.S.C. Chapter 447;

Chief Law Judge means the administrative law judge in charge of the adjudicative function of the Board's Office of Administrative Law Judges;

Complaint means an order of the Administrator, reissued for pleading purposes, from which an appeal to the Board has been taken pursuant to sections 49 U.S.C. 44106, 44709 or 46301;

Emergency order means an order of the Administrator issued pursuant to 49 U.S.C. 44709, which recites that an emergency exists and that safety in air commerce or air transportation and the public interest require the immediate effectiveness of such order;

Flight engineer means a person who holds a flight engineer certificate issued under Part 63 of Title 14 of the Code of Federal Regulations;

Initial decision means the law judge's decision on the issue or issues remaining for disposition at the close of a hearing;

Law judge means the administrative law judge assigned to hear and preside over the respective proceeding;

Mechanic means a person who holds a mechanic certificate issued under Part 65 of Title 14 of the Code of Federal Regulations;

Order means the document (sometimes also termed the complaint) by which the Administrator seeks to amend, modify, suspend or revoke a certificate, or impose a civil penalty;

Petition for review means a petition filed pursuant to 49 U.S.C. 44703 for review of the Administrator's denial of an application for issuance or renewal of an airman certificate;

Petitioner means a person who has filed a petition for review;

Pilot means a person who holds a pilot certificate issued under Part 61 of Title 14 of the Code of Federal Regulations;

Repairman means a person who holds a repairman certificate issued under Part 65 of Title 14 of the Code of Federal Regulations;

Respondent means the holder of a certificate who has appealed to the Board from an order of the Administrator amending, modifying, suspending or revoking a certificate, or imposing a civil penalty.

(b) Terms defined in 49 U.S.C. Chapters 11, 447 and 463 are used as so defined.

§ 821.2 Applicability and description of part.

The provisions of this part govern all air safety proceedings, including proceedings before a law judge on petition for review of the denial of any airman certificate (including a medical certificate), or on appeal from any order of the Administrator amending, modifying, suspending or revoking a certificate. The provisions of this part also govern all proceedings on appeal from an order of the Administrator imposing a civil penalty on a flight engineer, mechanic, pilot or repairman, or a person acting in such capacity. All proceedings on appeal to the Board from any initial decision or order of a law judge are also governed by this part.

§ 821.3 Description of docket numbering system.

In addition to sequential numbering of cases as received, each case formally handled by the Board will receive a letter prefix. These letter prefixes reflect the case type: ''SE'' for safety enforcement (certificate suspension/revocation) cases; ''SM'' (safety medical) for cases involving denials of medical certification; ''CD'' for cases involving

non-medical certificate denials; ''SR'' for cases involving safety registration issues under 49 U.S.C. 44101 *et seq.*; ''CP'' for cases involving the imposition of civil penalties; ''NA'' for cases in which a petition for review or appeal is not accepted because of a patent procedural deficiency; and ''EAJA'' for cases involving applications for fees and expenses under the Equal Access to Justice Act, governed by Part 826.

Subpart B—General Rules Applicable to Petitions for Review, Appeals to the Board, and Appeals From Law Judges Initial Decisions and Appealable Orders

§ 821.6 Appearances and rights of witnesses.

(a) Any party to a proceeding may appear and be heard in person, or by an attorney or other representative designated by that party. Upon hearing, and for good cause shown, the Board may suspend or bar any person from practicing before it.

(b) Any person appearing in person in any proceeding governed by this part may be accompanied, represented and advised, and may be examined by, his or her own counsel or representative.

(c) Any person who submits data or evidence in a proceeding governed by this part may, by timely request, procure a copy of any document submitted by him or her, or a copy of any transcript made of his or her testimony, on payment of reasonable costs. Original documents, data or evidence may be retained by a party upon permission of the law judge or the Board, upon substitution of a copy thereof.

(d) Any party to a proceeding who is represented by an attorney or representative shall notify the Board of the name, address and telephone number of that attorney or representative. In the event of a change in representation, the party shall notify the Board (in the manner provided in § 821.7) and the other parties to the proceeding (pursuant to § 821.8) before the new attorney or representative may participate in the proceeding in any way.

§ 821.7 Filing of documents with the Board.

(a) *Filing address, method and date of filing.* (1) Except as provided in paragraph (a)(2) of this section, documents are to be filed with the Office of Administrative Law Judges, National Transportation Safety Board, 490 L'Enfant Plaza East, SW., Room 4704, Washington, DC 20594, and addressed to the assigned law judge, if any. If the proceeding has not yet been assigned to a law judge, documents shall be addressed to the Case Manager.

(2) Subsequent to the filing of a notice of appeal from a law judge's initial decision or appealable order, the issuance of a decision permitting an interlocutory appeal, or the expiration of the period within which an appeal from the law judge's initial decision or appealable order may be filed, all documents are to be filed with the Office of General Counsel, National Transportation Safety Board, 490 L'Enfant Plaza East, SW., Room 6401, Washington, DC 20594.

(3) Documents shall be filed by personal delivery, by U.S. Postal Service first-class mail or by overnight delivery service. Except as specifically provided in Subpart I (governing emergency proceedings), facsimile filing is limited. Documents to be filed with a law judge or the Case Manager may be transmitted by facsimile, but such filing must be followed, no later than the next business day, by transmission of the original by personal delivery, first-class mail or overnight delivery service. Facsimile filing of documents to be filed with the Office of General Counsel is not permitted unless specifically authorized under Subpart I or requested by that office.

(4) Documents shall be deemed filed on the date of personal delivery; on the send date shown on the facsimile (where facsimile service is permitted under paragraph (a)(3) of this section or Subpart I); and, for mail delivery service, on the mailing date shown on the certificate of service, on the date shown on the postmark if there is no certificate of service, or on the mailing date shown by other evidence if there is no certificate of service and no postmark. Where the document bears a postmark that cannot reasonably be

reconciled with the mailing date shown on the certificate of service, the document will be deemed filed on the date of the postmark.

(b) *Number of copies.* Service on the Board of petitions for review, appeals from orders of the Administrator, and notices of appeal from law judges' initial decisions and appealable orders shall be by executed original and 3 copies. Service of all other documents shall be by executed original and one copy. Copies need not be signed, but the name of the person signing the original shall be shown thereon.

(c) *Form.* (1) Petitions for review, appeals to the Board from orders of the Administrator, and notices of appeal from law judges' initial decisions and appealable orders may be in the form of a letter signed by the petitioner or appealing party, and shall be typewritten or in legible handwriting.

(2) Documents filed with the Board consisting of more than one page may be affixed only in the upper left-hand corner by staple or clip, and shall not be bound or hole-punched. Any document failing to comply with this requirement is subject to being returned to the filing party.

(d) *Content.* Each document filed with the Board shall contain a concise and complete statement of the facts relied upon, and the relief sought, by the filing party.

(e) *Subscription.* The original of every document filed shall be signed by the filing party, or by that party's attorney or other representative.

(f) *Designation of person to receive service.* The initial document filed by a party in a proceeding governed by this part shall show on the first page the name, address and telephone number of the person or persons who may be served with documents on that party's behalf.

(g) *To whom directed.* All motions, requests and documents submitted in connection with petitions for review and appeals to the Board from orders of the Administrator shall designate, and be addressed to, the law judge to whom the proceeding has been assigned, if any. If the proceeding has not yet been assigned to a law judge, the document shall bear the designation ''unassigned,'' and shall be addressed to the Case Manager. All motions, requests and documents submitted subsequent to the filing of a notice of appeal from a law judge's initial decision or appealable order, or a decision permitting an interlocutory appeal, or after the expiration of the period within which an appeal from the law judge's initial decision or appealable order may be filed, shall be addressed to the Board's General Counsel.

§ 821.8 Service of documents.

(a) *Who must be served.* (1) Copies of all documents filed with the Board must be served on (*i.e.*, sent to) all other parties to the proceeding, on the date of filing, by the person filing them. A certificate of service shall be a part of each document and any copy or copies thereof tendered for filing, and shall certify concurrent service on the Board and the parties. A certificate of service shall be in substantially the following form:

I hereby certify that I have this day served the foregoing [specify document] on the following party's counsel or designated representatives [or party, if without counsel or representative], at the address indicated, by [specify the method of service (e.g., first-class mail, personal service, etc.)]

[List names and addresses of all persons served]

Dated at ____, this _____day of ____ 20____

(Signature) _____

For (on behalf of) _____

(2) Service shall be made on the person designated in accordance with § 821.7(f) to receive service. If no such person has been designated, service shall be made directly on the party.

(b) *Method of service.* (1) Service of documents by any party on any other party shall be accomplished by the method prescribed in § 821.7(a)(3) for the filing of documents with the Board.

(2) Notices of hearing, written initial decisions, law judges' appealable orders and Board orders on appeal shall be served by the Board on parties other than the Administrator by certified mail. Such documents may be served on the Administrator by first-class mail or facsimile. The Board may serve all other documents on the parties by first-class mail or facsimile.

(c) *Where service shall be made.* Except for personal service, parties shall be

served at the address appearing in the official record. If no address for service on the Administrator is designated in the record, documents shall be addressed for service to the Office of Chief Counsel, 800 Independence Avenue, SW., Washington, DC 20591. In the case of an agent designated by an air carrier under 49 U.S.C. 46103, service may be accomplished only at the agent's office or usual place of residence.

(d) *Presumption of service*. There shall be a presumption of lawful service:

(1) When receipt has been acknowledged by a person who customarily or in the ordinary course of business receives mail at the residence or principal place of business of the party or of the person designated under § 821.7(f); or

(2) When a properly addressed envelope, sent to the most current address in the official record, by regular, registered or certified mail, has been returned as unclaimed or refused.

(e) *Date of service*. The date of service shall be determined in the same manner as the filing date is determined under § 821.7(a)(4).

§ 821.9 Intervention and amicus appearance.

(a) *Intervention*. Any person may move for leave to intervene in a proceeding, and may become a party thereto, if it is found that such person has a property, financial or other legitimate interest that will not be adequately represented by the existing parties, and that such intervention will not unduly broaden the issues or delay the proceeding. Except for good cause shown, no motion for leave to intervene will be entertained if filed less than 15 days prior to the hearing. The extent to which an intervenor may participate in the proceeding is wholly within the law judge's discretion.

(b) *Amicus curiae briefs*. A brief of amicus curiae in a matter on appeal from a law judge's initial decision or appealable order may be filed, if accompanied by written consent of all the parties, or by leave of the General Counsel if, in his or her opinion, the brief will not unduly broaden the matters at issue or prejudice any party to the proceeding. A brief may be conditionally filed with motion for leave. The motion for leave shall identify the interest of the movant and shall state the reasons why a brief of amicus curiae is desirable. Such brief and motion shall be filed within the briefing time allowed the party whose position the brief would support, unless good cause for late filing is shown, in which event the General Counsel may provide an opportunity for response in determining whether to accept the amicus brief.

§ 821.10 Computation of time.

In computing any period of time prescribed or allowed by this part, by notice or order of a law judge or the Board, or by any applicable statute, the date of the act, event or default after which the designated period of time begins to run is not to be included in the computation. The last day of the period so computed is to be included unless it is a Saturday, Sunday or legal holiday for the Board, in which event the period runs until the end of the next day which is not a Saturday, Sunday or legal holiday. In all cases, Saturdays, Sundays and legal holidays for the Board shall be included in the computation of time, except they shall not be included in computations of time respecting petitions for review of determinations as to the existence of emergencies under § 821.54.

§ 821.11 Extensions of time.

(a) On written request filed with the Board and served on all other parties, or oral request with any extension granted confirmed in writing and served on all other parties by the requestor, and for good cause shown, the law judge or the Board may grant an extension of time to file any document; however, no extension of time will be granted for the filing of a document to which a statutory time limit applies.

(b) Extensions of time to file petitions for reconsideration shall not be granted upon a showing of good cause, but only in extraordinary circumstances.

(c) The General Counsel is authorized to grant unopposed extensions of time on timely oral request without a showing of good cause in cases on appeal to

the Board from a law judge's initial decision or appealable order. Written confirmation of such a grant of extension of time must promptly be sent by the requesting party to the Board and served on all other parties to the proceeding.

§ 821.12 Amendment and withdrawal of pleadings.

(a) *Amendment.* At any time more than 15 days prior to the hearing, a party may amend its pleadings by filing an amended pleading with the Board and serving copies thereof on all other parties. After that time, amendment shall be allowed only at the discretion of the law judge. In the case of amendment of an answerable pleading, the law judge shall allow any adverse party a reasonable time to object or answer. Amendments to complaints shall be consistent with the requirements of 49 U.S.C. 44709(c) and 44710(c).

(b) *Withdrawal.* Except in the case of a petition for review, an appeal to the Board, a complaint, or an appeal from a law judge's initial decision or appealable order, pleadings may be withdrawn only upon approval of the law judge or the Board.

§ 821.13 Waivers.

Waivers of any rights provided by statute or regulation shall either be in writing or by stipulation made at the hearing and entered into the record, and shall set forth the precise terms and conditions of the waiver.

§ 821.14 Motions.

(a) *General.* Any application to a law judge or to the Board for an order or ruling not otherwise provided for in this part shall be by motion. Prior to the assignment of the proceeding to a law judge, all motions shall be addressed to the Case Manager. Thereafter, and prior to the expiration of the period within which an appeal from the law judge's initial decision may be filed, all motions shall be addressed to the law judge. At all other times, motions shall be addressed to the General Counsel.

(b) *Form and content.* Unless made during a hearing, motions shall be made in writing, shall state with particularity the grounds for the relief requested, and shall be accompanied by affidavits or other evidence relied upon. Motions introduced during a hearing may be made orally on the record, unless the law judge directs otherwise.

(c) *Replies to motions.* Except when a motion is made during a hearing, any party may file a reply, accompanied by such affidavits or other evidence as that party desires to rely upon, within 15 days after the date of service of the motion on that party. Upon notice to the parties, the law judge or the Board may, where appropriate, set a shorter time for filing a reply. Where a motion is made during a hearing, the reply may be made at the hearing, or orally or in writing within such time as the law judge may fix.

(d) *Oral argument; briefs.* No oral argument will be heard on a motion unless the law judge or the Board directs otherwise.

(e) *Effect of pendency of motions.* Except as provided in §§ 821.17(a) and 821.18(a), the filing or pendency of a motion shall not automatically alter or extend the time fixed in this part (or any extension thereof previously granted) for the parties to take any actions.

§ 821.15 Motion to disqualify a Board Member.

A motion requesting that a Board Member disqualify himself or herself from participating in a proceeding under this part shall be filed in writing with the Board.

§ 821.16 Interlocutory appeals from law judges' rulings on motions.

Rulings of law judges on motions which are not dispositive of the proceeding as a whole may not be appealed to the Board prior to its consideration of the entire proceeding, except in extraordinary circumstances and with the consent of the law judge who made the ruling. Interlocutory appeals shall be disallowed unless the law judge finds, either orally on the record or in writing, that to allow such an appeal is necessary to prevent substantial detriment to the public interest or undue prejudice to a party. If an interlocutory appeal is allowed, any party may file a brief with the Board within such time as the law judge directs. No oral

argument will be heard unless the Board directs otherwise.

§ 821.17 Motions to dismiss, for judgment on the pleadings and for summary judgment.

(a) *Motions to dismiss petition for review or complaint.* A motion to dismiss a petition for review or a complaint may be filed in lieu of an answer, within the time limit for filing an answer set forth in § 821.24(c) or § 821.31(b). If such motion is not granted in its entirety, the answer shall be filed within 10 days after service of the law judge's order on the motion.

(b) *Motions to dismiss for lack of jurisdiction.* A motion to dismiss on the ground that the Board lacks jurisdiction may be made by any party at any time.

(c) *Motions for judgment on the pleadings.* A party may file a motion for judgment on the pleadings on the basis that no answer has been filed, or that the pleadings disclose that there are no material issues of fact to be resolved and that party is entitled to judgment as a matter of law.

(d) *Motions for summary judgment.* A party may file a motion for summary judgment on the basis that the pleadings and other supporting documentation establish that there are no material issues of fact to be resolved and that party is entitled to judgment as a matter of law.

(e) *Appeals of dismissal, judgment on the pleadings and summary judgment orders.* When a law judge grants a motion to dismiss, a motion for judgment on the pleadings or a motion for summary judgment, and terminates the proceeding without a hearing, an appeal of such order to the Board may be filed pursuant to the provisions of § 821.47. When a motion to dismiss, a motion for judgment on the pleadings or a motion for summary judgment is granted in part, § 821.16 applies.

§ 821.18 Motion for a more definite statement.

(a) A party may, in lieu of an answer, file a motion requesting that the petitioner's statement of reasons and supporting facts in a petition for review or the Administrator's allegations of fact in a complaint be made more definite and certain. The motion shall cite the defects complained of and the details sought. If the motion is granted and the law judge's order is not complied with within 15 days after service thereof, the law judge shall strike the portion or portions of the petition for review or complaint to which the motion is directed. If the motion is denied, the moving party shall file an answer within 10 days after service of the law judge's order on the motion.

(b) A party may file a motion to clarify an answer in the event that the answer fails to respond clearly to the petition for review or the complaint.

§ 821.19 Depositions and other discovery.

(a) *Depositions.* After a petition for review or a complaint is filed, any party may take the testimony of any person, including a party, by deposition, upon oral examination or written questions, without seeking prior Board approval. Reasonable notice shall be given in writing to the other parties, stating the name of the witness and the time and place of the taking of the deposition. A copy of any notice of deposition shall be served on the law judge to whom the proceeding has been assigned or, if no law judge has been assigned, on the Case Manager. In other respects, the taking of any deposition shall be in compliance with the provisions of 49 U.S.C. 46104(c).

(b) *Exchange of information by the parties.* At any time before the hearing, at the request of any party, the parties may exchange information, such as witness lists, exhibit lists, curricula vitae and bibliographies of expert witnesses, and other pertinent data. Any party may also use written interrogatories, requests for admissions and other discovery tools. The requesting party shall set the time for compliance with the request, which shall be reasonable and give due consideration to the closeness of the hearing, especially in emergency proceedings governed by Subpart I. Copies of discovery requests and responses shall be served on the law judge to whom the proceeding has been assigned or, if no law judge has been assigned, on the Case Manager. In the event of a dispute, either the assigned law judge or another law judge

delegated this responsibility (if a law judge has not yet been assigned or if the assigned law judge is unavailable) may issue an appropriate order, including an order directing compliance with any ruling previously made with respect to discovery.

(c) *Use of the Federal Rules of Civil Procedure.* Those portions of the Federal Rules of Civil Procedure that pertain to depositions and discovery may be used as a general guide for discovery practice in proceedings before the Board, where appropriate. The Federal Rules and the case law that construes them shall be considered by the Board and its law judges as instructive, rather than controlling.

(d) *Failure to provide or preserve evidence.* The failure of any party to comply with a law judge's order compelling discovery, or to cooperate with a timely request for the preservation of evidence, may result in a negative inference against that party with respect to the matter sought and not provided or preserved, a preclusion order, dismissal or other relief deemed appropriate by the law judge.

§ 821.20 Subpoenas, witness fees, and appearances of Board Members, officers and employees.

(a) *Subpoenas.* Except as provided in paragraph (c) of this section, subpoenas requiring the attendance of witnesses, or the production of documentary or tangible evidence, for the purpose of taking depositions or at a hearing, may be issued by the presiding law judge (or the chief law judge, if the proceeding has not been assigned to a law judge) upon application by any party. The application shall show the general relevance and reasonable scope of the evidence sought. Any person upon whom a subpoena is served may, within 7 days after service of the subpoena, but in any event prior to the return date thereof, file with the law judge who issued the subpoena a motion to quash or modify the subpoena, and such filing shall stay the effectiveness of the subpoena pending final action by the law judge on the motion.

(b) *Witness fees.* Witnesses shall be entitled to the same fees and expenses for mileage as are paid to witnesses in the courts of the United States. The fees and expenses shall be paid by the party at whose request the witness is subpoenaed or appears. The Board may decline to process a proceeding further should a party fail to compensate a witness pursuant to this paragraph.

(c) *Board Members, officers and employees.* In order to encourage a free flow of information to the Board's accident investigators, the Board disfavors the use of its personnel in enforcement proceedings. Therefore, the provisions of paragraph (a) of this section are not applicable to Board Members, officers and employees, or the production of documents in their custody. Applications for subpoenas requiring the attendance of such persons, or the production of such documents, must be addressed to the General Counsel, and shall set forth the need of the moving party for the testimony or documents sought, and a showing that such material is not now, and was not otherwise, reasonably available from other sources. Only upon the General Counsel's written approval for the issuance of a subpoena requiring a Board Member, officer or employee to provide testimony and/or to produce documents in connection with discovery or at a hearing may a law judge issue such a subpoena. The law judge shall not permit the testimony or documentary evidence provided by a Board Member, officer or employee to include any expression of opinion, or any account of statements of a party made during the Board's investigation of any accident.

§ 821.21 Official notice.

Where a law judge or the Board intends to take official notice of a material fact not appearing in the evidence in the record, notice shall be given to all parties, who may within 10 days file a petition disputing that fact.

Subpart C—Special Rules Applicable to Proceedings Under 49 U.S.C. 44703

§ 821.24 Initiation of proceeding.

(a) *Petition for review.* Where the Administrator has denied an application for the issuance or renewal of an airman certificate, the applicant may file with the Board a petition for review of

the Administrator's denial. The petition must be filed with the Board within 60 days after the date on which notice of the Administrator's denial was served on the petitioner.

(b) *Form and content of petition.* The petition may be in letter form. It shall identify the Administrator's certificate denial action, and contain a complete but concise statement of the reasons why the petitioner believes the certificate denial was erroneous.

(c) *Answer to petition.* The Administrator shall file an answer to the petition for review within 20 days after the date of service of the petition. The answer shall specifically address each of the reasons set forth in the petition as to why the petitioner believes the certificate denial was erroneous.

(d) *Stay of proceeding pending request for special issuance (restricted) medical certificate.* The Board lacks the authority to review requests for special issuance (restricted) medical certificates, or to direct that they be issued. Where a request for a special issuance certificate has been filed with the Administrator pursuant to the Federal Aviation Regulations, the Board will, upon the petitioner's written request, hold a petition for review of a denial of an unrestricted medical certificate in abeyance pending final action by the Administrator on the special issuance request, but for no longer than 180 days after the date on which the unrestricted medical certificate denial was issued.

(e) *New evidence.* Where review of a denial of an unrestricted medical certificate is at issue, if the petitioner has undergone medical testing or evaluation in addition to that already submitted or known to the Administrator, and wishes to introduce the results into the record, such new medical evidence must be served on the Administrator at least 30 days prior to the hearing. Absent good cause, failure to so timely serve the new medical evidence on the Administrator will result in the exclusion of such evidence from the record. The Administrator may amend his or her answer to respond to such new medical evidence within 10 days after the date on which he or she was served therewith.

§ 821.25 Burden of proof.

In proceedings under 49 U.S.C. 44703, the burden of proof shall be upon the petitioner.

§ 821.26 Motion to dismiss petition for review for lack of standing.

Upon motion by the Administrator within the time limit for filing an answer, a petition for review shall be dismissed for lack of standing in either of the following instances:

(a) If the petition seeks the issuance of the same type of certificate that was under an order of suspension on the date of the denial; or

(b) If the petition seeks the issuance of the same type of certificate that had been revoked within one year of the date of the denial, unless the order revoking such certificate provides otherwise.

Subpart D—Special Rules Applicable to Proceedings Under 49 U.S.C. 44709

§ 821.30 Initiation of proceeding.

(a) *Appeal.* Where the Administrator has issued an order amending, modifying, suspending or revoking a certificate, the affected certificate holder (respondent) may file with the Board an appeal from the Administrator's order. The respondent shall simultaneously serve a copy of the appeal on the Administrator. The appeal must be filed with the Board within 20 days after the date on which the Administrator's order was served on the respondent, except as provided with respect to emergency and other immediately effective orders under § 821.53(a).

(b) *Form and content of appeal.* The appeal may be in letter form. It shall identify the certificate or certificates affected and the Administrator's action from which the appeal is sought.

(c) *Effect of filing timely appeal with the Board.* Timely filing with the Board of an appeal from an order of the Administrator shall postpone the effective date of the order until final disposition of the appeal by the law judge or the Board, except where the order appealed from is an emergency or other immediately effective order, in which case the effectiveness of the order will

not be so stayed during the pendency of the appeal.

§ 821.31 Complaint procedure.

(a) *Filing, time of filing and service on respondent.* The order of the Administrator from which an appeal has been taken shall serve as the complaint. The Administrator shall (except as provided in § 821.55(a) with respect to emergency proceedings) file the complaint with the Board within 10 days after the date on which he or she was served with the appeal by the respondent, and shall simultaneously serve a copy of the complaint on the respondent. If the Administrator has determined that the respondent lacks qualification to be a certificate holder, the order filed as the complaint, or an accompanying statement, shall identify the pleaded factual allegations on which this determination is based.

(b) *Answer to complaint.* The respondent shall (except as provided in § 821.55(b) with respect to emergency proceedings) file with the Board an answer to the complaint within 20 days after the date on which the complaint was served by the Administrator, and shall simultaneously serve a copy of the answer on the Administrator. Failure by the respondent to deny the truth of any allegation or allegations in the complaint may be deemed an admission of the truth of the allegation or allegations not answered. The answer shall also identify any affirmative defenses that the respondent intends to raise at the hearing. The answer may be amended to include affirmative defenses in accordance with the provisions of § 821.12(a).

§ 821.32 Burden of proof.

In proceedings under 49 U.S.C. 44709, the burden of proof shall be upon the Administrator.

§ 821.33 Motion to dismiss stale complaint.

Where the complaint states allegations of offenses which occurred more than 6 months prior to the Administrator's advising the respondent as to reasons for proposed action under 49 U.S.C. 44709(c), the respondent may move to dismiss such allegations as stale pursuant to the following provisions:

(a) In those cases where the complaint does not allege lack of qualification of the respondent:

(1) The Administrator shall be required to show, by reply filed within 15 days after the date of service of the respondent's motion, that good cause existed for the delay in providing such advice, or that the imposition of a sanction is warranted in the public interest, notwithstanding the delay or the reasons therefor.

(2) If the Administrator does not establish good cause for the delay, or for the imposition of a sanction in the public interest notwithstanding the delay, the law judge shall dismiss the stale allegations and proceed to adjudicate the remaining portion of the complaint, if any.

(b) In those cases where the complaint alleges lack of qualification of the respondent, the law judge shall first determine whether an issue of lack of qualification would be presented if all of the allegations, stale and timely, are assumed to be true. If so, the law judge shall deny the respondent's motion. If not, the law judge shall proceed as in paragraph (a) of this section.

Subpart E—Law Judges

§ 821.35 Assignment, duties and powers.

(a) *Assignment of law judge and duration of assignment.* The chief law judge shall assign a law judge to preside over each proceeding. Until such assignment, motions, requests and documents shall be addressed to the Case Manager for handling by the chief law judge, who may handle these matters personally or delegate them to other law judges for decision. After assignment of a proceeding to a law judge, all motions, requests and documents shall be addressed to that law judge. The authority of the assigned law judge shall terminate upon the expiration of the period within which appeals from initial decisions or appealable orders may be filed, or upon the law judge's withdrawal from the proceeding.

(b) *Powers of law judge.* Law judges shall have the following powers:

(1) To give notice of, and to hold, prehearing conferences and hearings, and to consolidate proceedings which involve a common question of law or fact;

(2) To hold conferences, before or during the hearing, for the settlement or simplification of issues;

(3) To issue subpoenas, and to take depositions or cause depositions to be taken;

(4) To dispose of procedural requests or similar matters;

(5) To rule on motions;

(6) To regulate the conduct of hearings;

(7) To administer oaths and affirmations;

(8) To examine witnesses;

(9) To receive evidence and rule upon objections and offers of proof; and

(10) To issue initial decisions.

(c) *Disqualification*. A law judge shall withdraw from a proceeding if, at any time, he or she deems himself or herself disqualified. If the law judge does not withdraw, and if an appeal from the law judge's initial decision is filed, the Board will, on motion of a party, determine whether the law judge should have withdrawn and, if so, order appropriate relief.

Subpart F—Hearing

§ 821.37 Notice of hearing.

(a) *Time and location of hearing*. The law judge to whom the proceeding is assigned (or the chief judge) shall set a reasonable date, time and place for the hearing. Except as provided with respect to emergency proceedings in § 821.56(a), a written notice of hearing shall be served on the parties at least 30 days in advance of the hearing. The law judge may set the hearing for a date fewer than 30 days after the date of the issuance of the notice of hearing if all of the parties consent to an earlier hearing date. In setting the date of the hearing, due regard shall be given to the parties' discovery needs. In setting the place of the hearing, due regard shall be given to the location of the subject incident, the convenience of the parties and their witnesses, and the conservation of Board funds. Another relevant factor in determining the place of the hearing is the convenience of the hearing site to scheduled transportation service. Only in the most extraordinary circumstances may consideration be given to locating a hearing in a foreign country.

(b) *Hearing in several sessions*. Where appropriate, the law judge may hold a hearing in more than one session, at the same or different locations.

§ 821.38 Evidence.

Each party shall have the right to present a case-in-chief, or defense, by oral and documentary evidence, to submit evidence in rebuttal, and to conduct such cross-examination as may be required for a full and true disclosure of the facts. Hearsay evidence (including hearsay within hearsay, where there are acceptable circumstantial indicia of trustworthiness) shall be admissible. All material and relevant evidence should be admitted, but the law judge may exclude unduly repetitious evidence.

§ 821.39 Argument and submissions.

At the hearing, the law judge shall give the parties adequate opportunity for the presentation of arguments in support of, or in opposition to, motions, objections and proposed rulings. Prior to the issuance of the initial decision, the parties shall be afforded a reasonable opportunity to submit for consideration proposed findings and conclusions, and supporting reasons therefor.

§ 821.40 Record.

The transcript of testimony and exhibits, together with all papers, requests and rulings filed in the proceeding before the law judge, shall constitute the exclusive record of the proceeding. Copies of the transcript may be obtained by any party upon payment of the reasonable cost thereof. A copy of the transcript may be examined at the National Transportation Safety Board, Office of Administrative Law Judges, Public Docket Section.

Subpart G—Initial Decision

§ 821.42 Initial decision by law judge.

(a) *Written or oral decision.* The law judge may render his or her initial decision orally at the close of the hearing, or in writing at a later date, except as provided with respect to emergency proceedings in § 821.56(c).

(b) *Content.* The initial decision shall include findings and conclusions upon all material issues of fact, credibility of witnesses, law and discretion presented on the record, together with a statement of the reasons therefor.

(c) *Furnishing parties with, and issuance date of, oral decision.* If the initial decision is rendered orally, a copy thereof, excerpted from the hearing transcript, shall be furnished to the parties by the Office of Administrative Law Judges. Irrespective of the date on which the copy of the decision is transmitted to the parties, the issuance date of the decision shall be the date on which it was orally rendered.

§ 821.43 Effect of law judge's initial decision or appealable order and appeal therefrom.

If no appeal from the law judge's initial decision or appealable order is timely filed, the initial decision or order shall become final with respect to the parties, but shall not be binding precedent for the Board. The filing of a timely notice of appeal with the Board shall stay the effectiveness of the law judge's initial decision or order, unless the basis for the decision or order is that the Board lacks jurisdiction.

Subpart H—Appeal From Initial Decision

§ 821.47 Notice of appeal.

(a) *Time within which to file notice of appeal.* A party may appeal from a law judge's initial decision or appealable order by filing with the Board, and simultaneously serving on the other parties, a notice of appeal, within 10 days after the date on which the oral initial decision was rendered or the written initial decision or appealable order was served (except as provided in § 821.57(a) with respect to emergency proceedings). At any time before the time limit for filing an appeal from an initial decision or appealable order has passed, the law judge may, for good cause, reopen the matter on notice to the parties.

(b) *Request for reconsideration of law judge's initial decision or order.* A law judge may not reconsider an initial decision or appealable order after the time for appealing to the Board from the decision or order has expired, or after an appeal has been filed with the Board. However, a timely request for reconsideration by the law judge of the initial decision or appealable order, filed before an appeal to the Board is taken, will stay the deadline for filing an appeal until 10 days after the date on which the law judge serves his or her decision on the reconsideration request. For the purpose of this paragraph, if a request for reconsideration and a notice of appeal are filed on the same day, the reconsideration request will be deemed to have been filed first.

§ 821.48 Briefs and oral argument.

(a) *Appeal brief.* Except as provided in § 821.57(b) with respect to emergency proceedings, each appeal must be perfected, within 50 days after the date on which the oral initial decision was rendered, or 30 days after the date on which the written initial decision or appealable order was served, by the filing, and simultaneous service on the other parties, of a brief in support of the appeal. An appeal may be dismissed by the Board, either on its own initiative or on motion of another party, where a party who has filed a notice of appeal fails to perfect the appeal by filing a timely appeal brief.

(b) *Form and content of appeal brief.* (1) In addition to the general form requirements for documents set forth in § 821.7(c)(2), the appeal brief must be typewritten, double-spaced, on 8½-by-11 inch paper. The appeal brief shall set forth the name, address and telephone number of the party, or the attorney or other representative filing the brief on the party's behalf. No appeal brief may contain more than 35 pages of text without prior leave of the General Counsel, upon a showing of good cause.

(2) The appeal brief shall enumerate the appealing party's objections to the law judge's initial decision or appealable order, and shall state the reasons

for such objections, including any legal precedent relied upon in support thereof.

(3) Any error contained in the initial decision which is not objected to in the appeal brief may be deemed waived.

(c) *Reply brief*. Any other party to the proceeding may file a brief in reply to the appeal brief within 30 days after the date on which the appeal brief was served on that party (except as provided in § 821.57(b) with respect to emergency proceedings). A copy of the reply brief shall simultaneously be served on the appealing party and any other parties to the proceeding. The form requirements governing the appeal brief set forth in paragraph (b)(1) also apply to the reply brief.

(d) *Other filings*. Subsequent to the filing of the appeal and reply briefs, the parties may file citations to supplemental authorities. This procedure may be used only for identifying new and relevant legal authority, and not to correct omissions in briefing or to respond to a reply brief. No argument may be included with such a filing. Such filing shall include a reference to the page of the brief to which the cited legal authority pertains. Any response shall be filed within 10 days of the date of service of the supplemental filing, and shall be similarly limited in scope. With these exceptions, the parties may make no other submissions, except by leave of the Board, upon on a showing of good cause.

(e) *Oral argument*. Oral argument before the Board will not be held in proceedings under this part unless the Board, on motion of a party or on its own initiative, determines that oral argument is needed.

§ 821.49 Issues on appeal.

(a) On appeal, the Board will consider only the following issues:

(1) Are the findings of fact each supported by a preponderance of reliable, probative and substantial evidence?

(2) Are conclusions made in accordance with law, precedent and policy?

(3) Are the questions on appeal substantial?

(4) Have any prejudicial errors occurred?

(b) If the Board determines that the law judge erred in any respect, or that his or her initial decision or order should be changed, the Board may make any necessary findings and may issue an order in lieu of the law judge's initial decision or order, or may remand the proceeding for any such purpose as the Board may deem necessary.

§ 821.50 Petition for rehearing, reargument, reconsideration or modification of an order of the Board.

(a) *General*. Any party to a proceeding may petition the Board for rehearing, reargument, reconsideration or modification of a Board order on appeal from a law judge's initial decision or order. An initial decision or appealable order of a law judge that has become final because no timely appeal was taken therefrom may not be the subject of a petition under this section.

(b) *Timing and service*. The petition must be filed with the Board, and simultaneously served on the other parties, within 30 days after the date of service of the Board's order on appeal from the law judge's initial decision or order.

(c) *Content*. The petition shall state briefly and specifically the matters of record alleged to have been erroneously decided, and the ground or grounds relied upon. If the petition is based, in whole or in part, upon new matter, it shall set forth such new matter and shall contain affidavits of prospective witnesses, authenticated documents, or both, or an explanation of why such substantiation is unavailable, and shall explain why such new matter could not have been discovered in the exercise of due diligence prior to the date on which the evidentiary record closed.

(d) *Repetitious petitions*. Repetitious petitions will not be entertained by the Board, and will be summarily dismissed.

(e) *Reply to petition*. Any other party to the proceeding may file a reply to the petition within 15 days after the date on which the petition was served on that party. A copy of such reply shall simultaneously be served on the petitioner and any other parties to the proceeding.

(f) *Stay of effective date of Board's order*. The filing of a petition under this section shall operate to stay the

effective date of the Board's order, unless the Board directs otherwise.

Subpart I—Special Rules Applicable to Proceedings Involving Emergency and Other Immediately Effective Orders

§ 821.52 General.

(a) *Applicability*. This subpart shall apply to any order issued by the Administrator under 49 U.S.C. 44709 as an emergency order, as an order not designated as an emergency order but later amended to be an emergency order, and any order designated as immediately effective or effective immediately.

(b) *Effective date of emergency*. The procedure set forth herein shall apply as of the date on which written advice of the emergency character of the Administrator's order is received and docketed by the Board.

(c) *Computation of time*. Time shall be computed in accordance with the provisions of § 821.10.

(d) *Waiver*. Except as provided in § 821.54(f), or where the law judge or the Board determines that it would unduly burden another party or the Board, a certificate holder (respondent) affected by an emergency or other immediately effective order of the Administrator may, at any time after filing an appeal from such an order, waive the applicability of the accelerated time limits of this subpart; however, such a waiver shall not serve to lengthen any period of time for doing an act prescribed by this subpart which expired before the date on which the waiver was made.

§ 821.53 Appeal.

(a) *Time within which to file appeal*. An appeal from an emergency or other immediately effective order of the Administrator must be filed within 10 days after the date on which the Administrator's order was served on the respondent. The respondent shall simultaneously serve a copy of the appeal on the Administrator.

(b) *Form and content of appeal*. The appeal may be in letter form. It shall identify the certificate or certificates affected and indicate that an emergency or other immediately effective order of the Administrator is being appealed.

§ 821.54 Petition for review of Administrator's determination of emergency.

(a) *Time within which to file petition*. A respondent may, within 2 days after the date of receipt of an emergency or other immediately effective order of the Administrator, file with the Board a petition for review of the Administrator's determination that an emergency, requiring the order to be effective immediately, exists. This 2-day time limit is statutory and the Board has no authority to extend it. If the respondent has not previously filed an appeal from the Administrator's emergency or other immediately effective order, the petition shall also be considered a simultaneously filed appeal from the order under § 821.53.

(b) *Form, content and service of petition*. The petition may be in letter form. A copy of the Administrator's order, from which review of the emergency determination is sought, must be attached to the petition. If a copy of the order is not attached, the petition will be dismissed. While the petition need only request that the Board review the Administrator's determination as to the existence of an emergency requiring the order be effective immediately, it may also enumerate the respondent's reasons for believing that the Administrator's emergency determination is not warranted in the interest of aviation safety. The petition must be filed with the Board by overnight delivery service or facsimile and simultaneously served on the Administrator by the same means.

(c) *Reply to petition*. If the petition enumerates the respondent's reasons for believing that the Administrator's emergency determination is unwarranted, the Administrator may, within 2 days after the date of service of the petition, file a reply, which shall be strictly limited to matters of rebuttal. Such reply must be filed with the Board by overnight delivery service or facsimile and simultaneously served on the respondent by the same means. No submissions other than the respondent's petition and the Administrator's

reply in rebuttal will be accepted, except in accordance with paragraph (d) of this section.

(d) *Hearing*. No hearing shall be held on a petition for review of an emergency determination. However, the law judge may, on his or her own initiative, and strictly in keeping with the prohibition on ex parte communications set forth in § 821.61, solicit from the parties additional information to supplement that previously provided by the parties.

(e) *Disposition*. Within 5 days after the Board's receipt of the petition, the chief law judge (or, if the case has been assigned to a law judge, the law judge to whom the case is assigned) shall dispose of the petition by written order, and, in so doing, shall consider whether, based on the acts and omissions alleged in the Administrator's order, and assuming the truth of such factual allegations, the Administrator's emergency determination was appropriate under the circumstances, in that it supports a finding that aviation safety would likely be compromised by a stay of the effectiveness of the order during the pendency of the respondent's appeal.

(f) *Effect of law judge's ruling*. If the law judge grants the petition, the effectiveness of the Administrator's order shall be stayed until final disposition of the respondent's appeal by a law judge or by the Board. In such cases, the remaining provisions of this subpart (§§ 821.55–821.57) shall continue to apply, unless the respondent, with the Administrator's consent, waives their applicability. If the petition is denied, the Administrator's order shall remain in effect, and the remaining provisions of this subpart shall continue to apply, unless their applicability is waived by the respondent. The law judge's ruling on the petition shall be final, and is not appealable to the Board. However, in the event of an appeal to the Board from a law judge's decision on the merits of the emergency or other immediately effective order, the Board may, at its discretion, note, in its order disposing of the appeal, its views on the law judge's ruling on the petition, and such views shall serve as binding precedent in all future cases.

§ 821.55 Complaint, answer to complaint, motions and discovery.

(a) *Complaint*. In proceedings governed by this subpart, the Administrator's complaint shall be filed by overnight delivery service or facsimile, and simultaneously served on the respondent by the same means, within 3 days after the date on which the Administrator received the respondent's appeal, or within 3 days after the date of service of an order disposing of a petition for review of an emergency determination, whichever is later.

(b) *Answer to complaint*. The respondent shall file with the Board an answer to the complaint within 5 days after the date on which the complaint was served by the Administrator, and shall simultaneously serve a copy of the answer on the Administrator. Failure by the respondent to deny the truth of any allegation or allegations in the complaint may be deemed an admission of the truth of the allegation or allegations not answered. The answer shall also identify any affirmative defenses that the respondent intends to raise at the hearing.

(c) *Motion to dismiss and motion for more definite statement*. In proceedings governed by this subpart, no motion to dismiss the complaint or for a more definite statement of the complaint's allegations shall be made, but the substance thereof may be stated in the respondent's answer. The law judge may permit or require a more definite statement or other amendment to any pleading at the hearing, upon good cause shown and upon just and reasonable terms.

(d) *Discovery*. Discovery is authorized in proceedings governed by this subpart. Given the short time available for discovery, the parties shall cooperate to ensure timely completion of the discovery process prior to the hearing. Discovery requests shall be served by the parties as soon as possible. A motion to compel discovery should be expeditiously filed where any dispute arises, and the law judge shall promptly rule on such a motion. Time limits for compliance with discovery requests shall be set by the parties so as to accommodate, and not conflict with, the accelerated adjudication schedule set forth in this subpart. The provisions of

§ 821.19 shall apply, modified as necessary to meet the exigencies of this subpart's accelerated timeframes.

§ 821.56 Hearing and initial decision or appealable order of law judge.

(a) *Notice of hearing.* Within 3 days after the date on which the Board receives the Administrator's complaint, or immediately upon the issuance of a law judge's order disposing of a petition for review of the Administrator's emergency determination, if later, the parties shall be served with a written notice of hearing, setting forth the date, time and place of the hearing. The hearing shall be set for a date no later than 30 days after the date on which the respondent's appeal was received and docketed. To the extent that they are not inconsistent with this section, the provisions of § 821.37(a) shall also apply.

(b) *Conduct of hearing.* The provisions of §§ 821.38, 821.39 and 821.40, concerning the taking of evidence, argument and submissions by the parties, and the composition of the hearing record, shall apply to proceedings governed by this subpart.

(c) *Initial decision and effect of initial decision or appealable order.* The law judge's initial decision shall be made orally on the record at the termination of the hearing. The provisions of § 821.42, concerning the content of the initial decision, the furnishing of copies of the initial decision to the parties and the issuance date of the initial decision, and the provisions of § 821.43, concerning the effect of the law judge's initial decision or appealable order and any appeal therefrom, shall apply to proceedings governed by this subpart.

§ 821.57 Procedure on appeal.

(a) *Time within which to file notice of appeal.* A party may appeal from a law judge's initial decision or appealable order by filing with the Board, and simultaneously serving on the other parties, a notice of appeal, within 2 days after the date on which the initial decision was orally rendered or the appealable order was served. The time limitations for the filing of documents respecting appeals governed by this subpart will not be extended by reason of the unavailability of the hearing transcript.

(b) *Briefs and oral argument.* Each appeal in proceedings governed by this subpart must be perfected, within 5 days after the date on which the notice of appeal was filed, by the filing, and simultaneous service on the other parties, of a brief in support of the appeal. Any other party to the proceeding may file a brief in reply to the appeal brief within 7 days after the date on which the appeal brief was served on that party. A copy of the reply brief shall simultaneously be served on the appealing party and any other parties to the proceeding. Unless otherwise authorized by the Board, all briefs in connection with appeals governed by this subpart must be filed and served by overnight delivery service, or by facsimile confirmed by personal or first-class mail delivery of the original. Aside from the time limits and methods of filing and service specifically mandated by this paragraph, the provisions of § 821.48 shall apply.

(c) *Issues on appeal.* The provisions of § 821.49(a) shall apply in proceedings governed by this subpart.

(d) *Petition for rehearing, reargument, reconsideration or modification of order.* The only petitions for rehearing, reargument, reconsideration or modification of an order which the Board will entertain in proceedings governed by this subpart are those based on the ground that new matter has been discovered. Such petitions must:

(1) Set forth the new matter;

(2) Contain affidavits of prospective witnesses, authenticated documents, or both, or an explanation of why such substantiation is unavailable; and

(3) Contain a statement explaining why such new matter could not have been discovered in the exercise of due diligence prior to the date on which the evidentiary record closed.

Subpart J—Ex Parte Communications

AUTHORITY: Sec. 4, Pub. L. 94–409, 5 U.S.C. 556(d) and 557; 49 U.S.C. 1101–1155, 44701–44723, 46301.

§ 821.60 Definitions.

As used in this subpart:

Board decisional employee means a Board Member, law judge or other employee who is, or who may reasonably be expected to be, involved in the decisional process of the proceeding;

Ex parte communication means an oral or written communication not on the public record with respect to which reasonable prior notice to all parties is not given, but does not include requests for status reports on any matter or proceeding covered by this part.

§ 821.61 Prohibited ex parte communications.

(a) The prohibitions of this section shall apply from the time a petition for review or an appeal is filed unless the person responsible for the communication has knowledge that a petition for review or an appeal will be filed, in which case the prohibitions shall apply at the time of the acquisition of such knowledge. Such prohibitions shall continue until the time of the Board's final disposition of the petition, appeal and any ancillary matters, such as the adjudication of a claim for fees and expenses under the Equal Access to Justice Act.

(b) Except to the extent required for the disposition of ex parte matters as authorized by law:

(1) No interested person outside the Board shall make or knowingly cause to be made to any Board decisional employee an ex parte communication relevant to the merits of the proceeding;

(2) No Board decisional employee shall make or knowingly cause to be made to any interested person outside the Board an ex parte communication relevant to the merits of the proceeding. Ex parte communications solely relating to matters of Board procedure or practice are not prohibited by this section.

§ 821.62 Procedures for handling ex parte communications.

A Board decisional employee who receives, makes or knowingly causes to be made a communication prohibited by § 821.61 shall place in the public record of the proceeding:

(a) All such written communications;

(b) Memoranda stating the substance of all such oral communications; and

(c) All written responses, and memoranda stating the substance of all oral responses, to the communications described in paragraphs (a) and (b) of this section.

§ 821.63 Requirement to show cause and imposition of sanction.

(a) Upon receipt of a communication made or knowingly caused to be made by a party in violation of § 821.61, the presiding law judge (or the chief law judge, if the proceeding has not been assigned to a law judge) or the Board may, to the extent consistent with the interests of justice and the policy of the underlying statutes it administers, require the party to show cause why its claim or interest in the proceeding should not be dismissed, denied, disregarded or otherwise adversely affected on account of such violation.

(b) The Board may, to the extent consistent with the interest of justice and the policy of the underlying statutes it administers, consider a violation of § 821.61 sufficient grounds for a decision adverse to a party who has knowingly committed or knowingly caused such a violation to occur. Alternatively, the Board may impose a sanction on the party's attorney or representative, including suspending or barring the attorney or representative from practicing before it, where such action would be appropriate and penalizing the party represented would not be in the interest of justice.

Subpart K—Judicial Review of Board Orders

§ 821.64 Judicial review.

(a) *General.* Judicial review of a final order of the Board may be sought as provided in 49 U.S.C. 1153 and 46110 by the filing of a petition for review with the appropriate United States Court of Appeals within 60 days of the date of entry (*i.e.*, service date) of the Board's order. Under the applicable statutes, any party may appeal the Board's decision. The Board is not a party in interest in such appellate proceedings and, accordingly, does not typically participate in the judicial review of its decisions. In matters appealed by the Administrator, the other parties should

anticipate the need to make their own defense.

(b) *Stay pending judicial review*. No request for a stay pending judicial review will be entertained if it is received by the Board after the effective date of the Board's order (*see* § 821.50(b)). If a stay action is to be timely, any request must be filed sufficiently in advance of the effective date of the Board's order to allow for a reply and Board review.

PART 825—RULES OF PROCEDURE FOR MERCHANT MARINE APPEALS FROM DECISIONS OF THE COMMANDANT, U.S. COAST GUARD

Sec.
825.1 Applicability.
825.5 Notice of appeal.
825.10 Referral of record.
825.15 Issues on appeal.
825.20 Briefs in support of appeal.
825.25 Oral argument.
825.30 Action by the Board.
825.35 Action after remand.
825.40 Ex parte communications.

AUTHORITY: Sec. 304(a)(9)(B), Independent Safety Board Act of 1974, Pub. L. 93–633, 88 Stat. 2169 (49 U.S.C. 1903(a)(9)(B)).

SOURCE: 40 FR 30248, July 17, 1975, unless otherwise noted.

§ 825.1 Applicability.

The provisions of this part govern all proceedings before the National Transportation Safety Board (Board) on appeals taken from decisions, on or after April 1, 1975, of the Commandant, U.S. Coast Guard, sustaining orders of an administrative law judge, revoking, suspending, or denying a license, certificate, document, or register in proceedings under:

(a) R.S. 4450, as amended (46 U.S.C. 239);

(b) Act of July 15, 1954 (46 U.S.C. 239a–b); or

(c) Section 4, Great Lakes Pilotage Act (46 U.S.C. 216(b)).

§ 825.5 Notice of appeal.

(a) A party may appeal from the Commandant's decision sustaining an order of revocation, suspension, or denial of a license, certificate, document, or register in proceedings described in § 825.1, by filing a notice of appeal with the Board within 10 days after service of the Commandant's decision upon the party or his designated attorney. Upon good cause shown, the time for filing may be extended.

(b) Notice of appeal shall be addressed to the Docket Clerk, National Transportation Safety Board, Washington, DC 20594. At the same time, a copy shall be served on the Commandant (GL), U.S. Coast Guard, Washington, DC 20590.

(c) The notice of appeal shall state the name of the party, the number of the Commandant's decision, and, in brief, the grounds for the appeal.

§ 825.10 Referral of record.

Upon receipt of a notice of appeal, the Commandant shall immediately transmit to the Board the complete record of the hearing upon which his decision was based. This includes the charges, the transcript of testimony, and hearing proceedings (including exhibits), briefs filed by the party, the decision of the administrative law judge, and the Commandant's decision on appeal. It does not include intra-agency staff memoranda provided as advice to the Commandant to aid in his decision.

§ 825.15 Issues on appeal.

The only issues that may be considered on appeal are:

(a) A finding of a material fact is erroneous;

(b) A necessary legal conclusion is without governing precedent or is a departure from or contrary to law or precedent;

(c) A substantial and important question of law, policy, or discretion is involved; or

(d) A prejudicial procedural error has occurred.

§ 825.20 Briefs in support of appeal.

(a) Within 20 days after the filing of a notice of appeal, the appellant must file, in the same manner as prescribed for the notice in § 825.5, a brief in support of the appeal.

(b) This document shall set forth:

(1) The name and address of the appellant;

(2) The number and a description of the license, certificate, document, or register involved;

(3) A summary of the charges affirmed by the Commandant as proved;

(4) Fact findings by the Commandant disputed by the appellant;

(5) Specific statements of errors of laws asserted;

(6) Specific statements of any abuse of discretion asserted; and

(7) The relief requested.

(c) Objection based upon evidence of record need not be considered unless the appeal contains specific record citation to the pertinent evidence.

(d) When a brief has been filed by appellant under this section, the Coast Guard may, within 15 days of service of the brief on the Commandant, submit to the Board a reply brief.

(e) If a party who has filed a notice of appeal does not perfect the appeal by the timely filing of an appeal brief, the Board may dismiss the appeal on its own initiative or on motion of the Coast Guard.

§ 825.25 Oral argument.

(a) If any party desires to argue a case orally before the Board, he should request leave to make such argument in his brief filed pursuant to § 825.20.

(b) Oral argument before the Board will normally not be granted unless the Board finds good cause for such argument. If granted, the parties will be advised of the date.

§ 825.30 Action by the Board.

(a) On review by the Board, if no reversible error is found in the Commandant's decision on appeal, that decision will be affirmed.

(b) On review by the Board, if reversible error is found in the Commandant's decision on appeal, the Board may:

(1) Set aside the entire decision and dismiss the charges if it finds the error incurable; or

(2) Set aside the order, or conclusions, or findings of the Commandant and remand the case to him for further consideration if it finds the error curable.

(c) When a matter has been remanded to the Commandant under paragraph (b) of this section, the Commandant may act in accordance with the terms of the order of remand, or he may, as appropriate, further remand the matter to the administrative law judge of the Coast Guard who heard the case, or to another administrative law judge of the Coast Guard, with appropriate directions.

§ 825.35 Action after remand.

When a case has been remanded under § 825.30, a party shall retain all rights of review under 46 CFR part 5 and this part, as applicable.

§ 825.40 Ex parte communications.

(a) As used in this section:

Board decisional employee means a Board Member or employee who is or who may reasonably be expected to be involved in the decisional process of the proceeding;

Ex parte communication means an oral or written communication not on the public record with respect to which reasonable prior notice to all parties is not given, but it shall not include requests for status reports on any matter or proceeding covered by this part.

(b) The prohibition of paragraph (c) of this section shall apply from the time a proceeding is noticed for hearing unless the person responsible for the communication has knowledge that it will be noticed, in which case the prohibition shall apply at the time of the acquisition of such knowledge.

(c) Except to the extent required for the disposition of ex parte matters as authorized by law:

(1) No interested person outside the Board shall make or knowingly cause to be made to any Board employee an ex parte communication relevant to the merits of the proceeding;

(2) No Board employee shall make or knowingly cause to be made to any interested person outside the Board an ex parte communication relevant to the merits of the proceeding.

Ex parte communications regarding solely matters of Board procedure or practice are not prohibited by this paragraph.

(d) A Board employee who receives or who makes or knowingly causes to be made a communication prohibited by paragraph (c) of this section, shall place on the public record of the proceeding:

(1) All such written communications;

(2) Memoranda stating the substance of all such oral communication; and

(3) All written responses, and memoranda stating the substance of all oral responses, to materials described in paragraphs (d) (1) and (2) of this section.

(e) Upon receipt of a communication knowingly made or caused to be made in violation of paragraph (c) of this section, the Board may, to the extent consistent with the interests of justice and the policy of the underlying statutes, require the party to show cause why his or her interest in the proceeding should not be dismissed, denied, disregarded, or otherwise adversely affected on account of such violation.

(f) The Board may, to the extent consistent with the interests of justice and the policy of the underlying statutes administered by the Board, consider a violation of this section sufficient grounds for a decision adverse to a party who has knowingly committed such violation or knowingly caused such violation to occur.

(Authority: Sec. 4, Government in the Sunshine Act, Pub. L. 94–409, amending 5 U.S.C. 556 (d) and 5 U.S.C. 557; Independent Safety Board Act of 1974, Pub. L. 93–633, 88 Stat. 2166 (49 U.S.C. 1901 *et seq.*))

[42 FR 21614, Apr. 28, 1977]

PART 826—RULES IMPLEMENTING THE EQUAL ACCESS TO JUSTICE ACT OF 1980

Subpart A—General Provisions

Sec.
826.1 Purpose of these rules.
826.2 When the Act applies.
826.3 Proceedings covered.
826.4 Eligibility of applicants.
826.5 Standards for awards.
826.6 Allowable fees and expenses.
826.7 Rulemaking on maximum rates for attorney fees.
826.8 Awards against the Federal Aviation Administration.

Subpart B—Information Required From Applicants

826.21 Contents of application.
826.22 Net worth exhibit.
826.23 Documentation of fees and expenses.
826.24 When an application may be filed.

Subpart C—Procedures for Considering Applications

826.31 Filing and service of documents and general procedures.
826.32 Answer to application.
826.33 Reply.
826.34 Comments by other parties.
826.35 Settlement.
826.36 Further proceedings.
826.37 Decision.
826.38 Board review.
826.39 Judicial review.
826.40 Payment of award.

AUTHORITY: Section 203(a)(1) Pub. L. 99–80, 99 Stat. 186 (5 U.S.C. 504).

SOURCE: 46 FR 48209, Oct. 1, 1981, unless otherwise noted.

Subpart A—General Provisions

§ 826.1 Purpose of these rules.

The Equal Access to Justice Act, 5 U.S.C. 504 (the Act), provides for the award of attorney fees and other expenses to eligible individuals and entities who are parties to certain administrative proceedings (adversary adjudications) before the National Transportation Safety Board (Board). An eligible party may receive an award when it prevails over the Federal Aviation Administration (FAA), unless the Government agency's position in the proceeding was substantially justified or special circumstances make an award unjust. The rules in this part describe the parties eligible for awards and the proceedings that are covered. They also explain how to apply for awards, and the procedures and standards that this Board will use to make them. As used hereinafter, the term ''agency'' applies to the FAA.

§ 826.2 When the Act applies.

The Act applies to any adversary adjudication identified in § 826.3 as covered under the Act.

[59 FR 30531, June 14, 1994]

§ 826.3 Proceedings covered.

(a) The Act applies to certain adversary adjudications conducted by the Board. These are adjudications under 5 U.S.C. 554 in which the position of the FAA is presented by an attorney or

other representative who enters an appearance and participates in the proceedings. Proceedings to grant or renew certificates or documents, hereafter referred to as ''licenses,'' are excluded, but proceedings to modify, suspend, or revoke licenses or to impose a civil penalty on a flight engineer, mechanic, pilot, or repairman (or person acting in that capacity) are covered if they are otherwise ''adversary adjudications.'' For the Board, the type of proceeding covered includes (but may not be limited to) aviation enforcement cases appealed to the Board under sections 501, 609, 611 and 901 of the Federal Aviation Act (49 U.S.C. 44101 *et seq.*, 44720–44711, 44715, 46301).

(b) The Board may also designate a proceeding not listed in paragraph (a) as an adversary adjudication for purposes of the Act by so stating in an order initiating the proceeding or designating the matter for hearing. The Board's failure to designate a proceeding as an adversary adjudication shall not preclude the filing of an application by a party who believes the proceeding is covered by the Act; whether the procedure is covered will then be an issue for resolution in proceedings on the application.

(c) If a proceeding includes both matters covered by the Act and matters specifically excluded from coverage, any award made will include only fees and expenses related to covered issues.

[46 FR 48209, Oct. 1, 1981, as amended at 59 FR 59054, Nov. 15, 1994]

§ 826.4 Eligibility of applicants.

(a) To be eligible for an award of attorney fees and other expenses under the Act, the applicant must be a party to the adversary adjudication for which it seeks an award. The term ''party'' is defined in 5 U.S.C. 551(3). The applicant must show that it meets all conditions of eligibility set out in this subpart and in subpart B.

(b) The types of eligible applicants are as follows:

(1) An individual with a net worth of not more than $2 million;

(2) The sole owner of an unincorporated business who has a net worth of not more than $7 million, including both personal and business interests, and not more than 500 employees;

(3) A charitable or other tax-exempt organization described in section 501(c)(3) of the Internal Revenue Code (26 U.S.C. 501(c)(3)) with not more than 500 employees;

(4) A cooperative association as defined in section 15(a) of the Agricultural Marketing Act (12 U.S.C. 1141j(a)) with not more than 500 employees; and

(5) Any other partnership, corporation, association, or public or private organization with a net worth of not more than $7 million and not more than 500 employees.

(c) For the purpose of eligibility, the net worth and number of employees of an applicant shall be determined as of the date the proceeding was initiated.

(d) An applicant who owns an unincorporated business will be considered an ''individual'' rather than a ''sole owner of an unincorporated business'' if the issues on which the applicant prevails are related primarily to personal interests rather than to business interests.

(e) The employees of an applicant include all persons who regularly perform services for remuneration for the applicant, under the applicant's direction and control. Part-time employees shall be included on a proportional basis.

(f) The net worth and number of employees of the applicant and all of its affiliates shall be aggregated to determine eligibility. Any individual, corporation, or other entity that directly or indirectly controls or owns a majority of the voting shares or other interest of the applicant, or any corporation or other entity of which the applicant directly or indirectly owns or controls a majority of the voting shares or other interest, will be considered an affiliate for purposes of this part, unless the administrative law judge determines that such treatment would be unjust and contrary to the purposes of the Act in light of the actual relationship between the affiliated entities. In addition, the administrative law judge may determine that financial relationships of the applicant other than those described in this paragraph constitute special circumstances that would make an award unjust.

(g) An applicant that participates in a proceeding primarily on behalf of one

or more other persons or entities that would be ineligible is not itself eligible for an award.

[46 FR 48209, Oct. 1, 1981, as amended at 54 FR 10332, Mar. 13, 1989]

§ 826.5 Standards for awards.

(a) A prevailing applicant may receive an award for fees and expenses incurred in connection with a proceeding, or in a significant and discrete substantive portion of the proceeding, unless the position of the agency over which the applicant has prevailed was substantially justified. The burden of proof that an award should not be made to an eligible prevailing applicant is on the agency counsel, who may avoid an award by showing that the agency's position was reasonable in law and fact.

(b) An award will be reduced or denied if the applicant has unduly or unreasonably protracted the proceeding or if special circumstances make the award sought unjust.

§ 826.6 Allowable fees and expenses.

(a) Awards will be based on rates customarily charged by persons engaged in the business of acting as attorneys, agents, and expert witnesses, even if the services were made available without charge or at a reduced rate to the applicant.

(b)(1) No award for the fee of an attorney or agent under these rules may exceed $75 indexed as follows:

$$\frac{X}{\$75/\text{hr}} = \frac{\text{CPI_New}}{\text{CPI_1981}}$$

The CPI to be used is the annual average CPI, All Urban Consumers, U.S. City Average, All Items, except where a local, All Item index is available. Where a local index is available, but results in a manifest inequity vis-a-vis the U.S. City Average, the U.S. City Average may be used. The numerator of that equation is the yearly average for the year(s) the services were provided, with each year calculated separately. If an annual average CPI for a particular year is not yet available, the prior year's annual average CPI shall be used. This formula increases the $75 statutory cap by indexing it to reflect cost of living increases, as authorized in 5 U.S.C. 504(b)(1)(A)(ii). Application of these increased rate caps requires affirmative findings under § 821.6(c) of this chapter. For ease of application, available U.S. City figures are reproduced as follows:

1981	90.9
1982	96.5
1983	99.6
1984	103.9
1985	107.6
1986	109.6
1987	113.6
1988	118.3
1989	124.0
1990	130.7
1991	136.2
1992	140.3
1993	144.5

(2) No award to compensate an expert witness may exceed the highest rate at which the agency pays expert witnesses. However, an award may also include the reasonable expenses of the attorney, agent, or witness as a separate item, if the attorney, agent, or witness ordinarily charges clients separately for such expenses.

(c) In determining the reasonableness of the fee sought for an attorney, agent, or expert witness, the administrative law judge shall consider the following:

(1) If the attorney, agent, or witness is in private practice, his or her customary fee for similar services, or if an employee of the applicant, the fully allocated cost of the services;

(2) The prevailing rate for similar services in the community in which the attorney, agent, or witness ordinarily performs services;

(3) The time actually spent in the representation of the applicant;

(4) The time reasonably spent in light of the difficulty or complexity of the issues in the proceeding; and

(5) Such other factors as may bear on the value of the services provided.

(d) The reasonable cost of any study, analysis, engineering report, test, project, or similar matter prepared on behalf of a party may be awarded, to the extent that the charge for the service does not exceed the prevailing rate for similar services, and the study or

other matter was necessary for preparation of the applicant's case.

[46 FR 48209, Oct. 1, 1981, as amended at 58 FR 21544, Apr. 22, 1993; 59 FR 30531, June 14, 1994]

§ 826.7 Rulemaking on maximum rates for attorney fees.

(a) In addition to increases based on cost of living (*see* § 826.6), attorney fees in some or all of the proceedings covered by this part may also be increased beyond the statutory cap of $75 if warranted by special factors (such as limited availability of attorneys qualified to handle certain types of proceedings). The Board will conduct any rulemaking proceedings for this purpose under the informal rulemaking procedures of the Administrative Procedure Act.

(b) Any person may file with the Board a petition for rulemaking to increase the maximum rate for attorney fees by demonstrating that a special factor(s) justifies a higher fee. The petition shall identify the rate the petitioner believes the Board should establish and the proceeding(s) or types of proceedings in which the rate should be used. It should also explain fully the reasons why the higher rate is warranted. The Board will respond to the petition within 60 days after it is filed, by initiating a rulemaking proceeding, denying the petition, or taking other appropriate action.

[58 FR 21545, Apr. 22, 1993]

§ 826.8 Awards against the Federal Aviation Administration.

When an applicant is entitled to an award because it prevails over an agency of the United States that participates in a proceeding before the Board and takes a position that is not substantially justified, the award shall be made against that agency.

Subpart B—Information Required From Applicants

§ 826.21 Contents of application.

(a) An application for an award of fees and expenses under the Act shall identify the applicant and the proceeding for which an award is sought. The application shall show that the applicant has prevailed and identify the position of the agency in the proceeding that the applicant alleges was not substantially justified. Unless the applicant is an individual, the application shall also state the number of employees of the applicant and describe briefly the type and purpose of its organization or business.

(b) The application shall also include a statement that the applicant's net worth does not exceed $2 million (if an individual) or $7 million (for all other applicants, including their affiliates). However, an applicant may omit this statement if:

(1) It attaches a copy of a ruling by the Internal Revenue Service that it qualifies as an organization described in section 501(c)(3) of the Internal Revenue Code (26 U.S.C. 501(c)(3)), or in the case of a tax-exempt organization not required to obtain a ruling from the Internal Revenue Service on its exempt status, a statement that describes the basis for the applicant's belief that it qualifies under such section; or

(2) It states that it is a cooperative association as defined in section 15(a) of the Agricultural Marketing Act (12 U.S.C. 1141j(a)).

(c) The application shall state the amount of fees and expenses for which an award is sought.

(d) The application may also include any other matters that the applicant wishes this agency to consider in determining whether and in what amount an award should be made.

(e) The application shall be signed by the applicant or an authorized officer or attorney for the applicant. It shall also contain or be accompanied by a written verification under oath or under penalty of perjury that the information provided in the application is true and correct.

[46 FR 48209, Oct. 1, 1981, as amended at 59 FR 30532, June 14, 1994]

§ 826.22 Net worth exhibit.

(a) Each applicant except a qualified tax-exempt organization or cooperative association must provide with its application a detailed exhibit showing the net worth of the applicant and any affiliates (as defined in § 826.4(f) of this part) when the proceeding was initiated. The exhibit may be in any form

convenient to the applicant that provides full disclosure of the applicant's and its affiliates' assets and liabilities and is sufficient to determine whether the applicant qualifies under the standards in this part. The administrative law judge may require an applicant to file additional information to determine the eligibility for an award.

(b) Ordinarily, the net worth exhibit will be included in the public record of the proceeding. However, an applicant that objects to public disclosure of information in any portion of the exhibit and believes there are legal grounds for withholding it from disclosure may submit that portion of the exhibit directly to the administrative law judge in a sealed envelope labeled ''Confidential Financial Information,'' accompanied by a motion to withhold the information from public disclosure. The motion shall describe the information sought to be withheld and explain, in detail, why it falls within one or more of the specific exemptions from mandatory disclosure under the Freedom of Information Act, 5 U.S.C. 552(b) (1) through (9), why public disclosure of the information would adversely affect the applicant, and why disclosure is not required in the public interest. The material in question shall be served on counsel representing the agency against which the applicant seeks an award, but need not be served on any other party to the proceeding. If the administrative law judge finds that the information should not be withheld from disclosure, it shall be placed in the public record of the proceeding. Otherwise, any request to inspect or copy the exhibit shall be disposed of in accordance with the Board's established procedures under the Freedom of Information Act as inplemented by Part 801 of the Board's rules.

§ 826.23 Documentation of fees and expenses.

The application shall be accompanied by full documentation of the fees and expenses, including the cost of any study, analysis, engineering report, test, project or similar matter, for which an award is sought. A separate itemized statement shall be submitted for each professional firm or individual whose services are covered by the application, showing the hours spend in connection with the proceeding by each individual, a description of the specific services performed, the rate at which each fee has been computed, any expenses for which reimbursement is sought, the total amount claimed, and the total amount paid or payable by the applicant or by any other person or entity for the services provided. The administrative law judge may require the applicant to provide vouchers, receipts, or other substantiation for any expenses claimed.

§ 826.24 When an application may be filed.

(a) An application may be filed whenever the applicant has prevailed in the proceeding, but in no case no later than the 30 days after the Board's final disposition of the proceeding. This 30-day deadline is statutory and the Board has no authority to extend it.

(b) If review or reconsideration is sought or taken of a decision to which an applicant believes it has prevailed, proceedings for the award of fees shall be stayed pending final disposition of the underlying controversy.

(c) For purposes of this rule, final disposition means the later of (1) the date on which an unappealed initial decision by an administrative law judge becomes administratively final; (2) issuance of an order disposing of any petitions for reconsideration of the Board's final order in the proceeding; (3) if no petition for reconsideration is filed, the last date on which such a petition could have been filed; or (4) issuance of a final order or any other final resolution of a proceeding, such as a settlement or voluntary dismissal, which is not subject to a petition for reconsideration.

[46 FR 48209, Oct. 1, 1981, as amended at 59 FR 30532, June 14, 1994]

Subpart C—Procedures for Considering Applications

§ 826.31 Filing and service of documents and general procedures.

The rules contained in 49 CFR part 821 apply to proceedings under the Act,

unless they are superseded by or are inconsistent with a provision of this part.

[59 FR 30532, June 14, 1994]

§ 826.32 Answer to application.

(a) Within 30 days after service of an application, counsel representing the agency against which an award is sought may file an answer to the application. Unless agency counsel requests an extension of time for filing or files a statement of intent to negotiate under paragraph (b) of this section, failure to file an answer within the 30-day period may be treated as a consent to the award requested.

(b) If agency counsel and the applicant believe that the issues in the fee application can be settled, they may jointly file a statement of their intent to negotiate a settlement. The filing of this statement shall extend the time for filing an answer for an additional 30 days, and further extensions may be granted by the administrative law judge upon request by agency counsel and the applicant.

(c) The answer shall explain in detail any objections to the award requested and identify the facts relied on in support of agency counsel's position. If the answer is based on any alleged facts not already in the record of the proceeding, agency counsel shall include with the answer either supporting affidavits or a request for further proceedings under § 826.36.

§ 826.33 Reply.

Within 15 days after service of an answer, the applicant may file a reply. If the reply is based on any alleged facts not already in the record of the proceeding, the applicant shall include with the reply either supporting affidavits or a request for further proceedings under § 826.36.

§ 826.34 Comments by other parties.

Any party to a proceeding other than the applicant and agency counsel may file comments on an application within 30 days after it is served or on an answer within 15 days after it is served. A commenting party may not participate further in proceedings on the application unless the administrative law judge determines that the public interest requires such participation in order to permit full exploration of matters raised in the comments.

§ 826.35 Settlement.

The applicant and agency counsel may agree on a proposed settlement of the award before final action on the application, either in connection with a settlement of the underlying proceeding, or after the underlying proceeding has been concluded. If a prevailing party and agency counsel agree on a proposed settlement of an award before an application has been filed, the application shall be filed with the proposed settlement.

§ 826.36 Further proceedings.

(a) Ordinarily the determination of an award will be made on the basis of the written record; however, on request of either the applicant or agency counsel, or on his or her own initiative, the administrative law judge assigned to the matter may order further proceedings, such as an informal conference, oral argument, additional written submissions, or an evidentiary hearing. Such further proceedings shall be held only when necessary for full and fair resolution of the issues arising from the application and shall be conducted as promptly as possible.

(b) A request that the administrative law judge order further proceedings under this section shall specifically identify the information sought or the disputed issues and shall explain why the additional proceedings are necessary to resolve the issues.

§ 826.37 Decision.

The administrative law judge shall issue an initial decision on the application within 60 days after completion of proceedings on the application. The decision shall include written findings and conclusions on the applicant's eligibility and status as a prevailing party and an explanation of the reasons for any difference between the amount requested and the amount awarded. The decision shall also include, if at issue, findings on whether the agency's position was substantially justified, whether the applicant unduly protracted the proceedings, or whether

special circumstances make an award unjust.

§ 826.38 Board review.

Either the applicant or agency counsel may seek review of the initial decision on the fee application, or the Board may decide to review the decision on its own initiative, in accordance with subpart H of part 821 for FAA safety enforcement matters appealed under section 609 of the Federal Aviation Act. If neither the applicant nor agency counsel seeks review and the Board does not take review on its own initiative, the initial decision on the application shall become a final decision of the Board 30 days after it is issued. Whether to review a decision is a matter within the discretion of the Board. If review is taken, the Board will issue a final decision on the application or remand the application to the administrative law judge who issued the initial fee award determination for further proceedings.

§ 826.39 Judicial review.

Judicial review of final Board decisions on awards may be sought as provided in 5 U.S.C. 504(c)(2).

§ 826.40 Payment of award.

An applicant seeking payment of an award shall submit to the disbursing official of the FAA a copy of the Board's final decision granting the award, accompanied by a statement that the applicant will not seek review of the decision in the United States courts. Applications for award grants in cases involving the FAA shall be sent to: The Office of Accounting and Audit, AAA–1, Federal Aviation Administration, 800 Independence Avenue, SW., Washington, DC 20591. The agency will pay the amount awarded to the applicant within 60 days, unless judicial review of the award or of the underlying decision of the adversary adjudication has been sought by the applicant or any other party to the proceeding.

PART 830—NOTIFICATION AND REPORTING OF AIRCRAFT ACCIDENTS OR INCIDENTS AND OVERDUE AIRCRAFT, AND PRESERVATION OF AIRCRAFT WRECKAGE, MAIL, CARGO, AND RECORDS

Subpart A—General

Sec.
830.1 Applicability.
830.2 Definitions.

Subpart B—Initial Notification of Aircraft Accidents, Incidents, and Overdue Aircraft

830.5 Immediate notification.
830.6 Information to be given in notification.

Subpart C—Preservation of Aircraft Wreckage, Mail, Cargo, and Records

830.10 Preservation of aircraft wreckage, mail, cargo, and records.

Subpart D—Reporting of Aircraft Accidents, Incidents, and Overdue Aircraft

830.15 Reports and statements to be filed.

AUTHORITY: Independent Safety Board Act of 1974, as amended (49 U.S.C. 1101–1155); Federal Aviation Act of 1958, Public Law 85–726, 72 Stat. 731 (codified as amended at 49 U.S.C. 40101).

SOURCE: 53 FR 36982, Sept. 23, 1988, unless otherwise noted.

Subpart A—General

§ 830.1 Applicability.

This part contains rules pertaining to:

(a) Initial notification and later reporting of aircraft incidents and accidents and certain other occurrences in the operation of aircraft, wherever they occur, when they involve civil aircraft of the United States; when they involve certain public aircraft, as specified in this part, wherever they occur; and when they involve foreign civil aircraft where the events occur in the United States, its territories, or its possessions.

(b) Preservation of aircraft wreckage, mail, cargo, and records involving all civil and certain public aircraft accidents, as specified in this part, in the

United States and its territories or possessions.

[60 FR 40112, Aug. 7, 1995]

§ 830.2 Definitions.

As used in this part the following words or phrases are defined as follows:

Aircraft accident means an occurrence associated with the operation of an aircraft which takes place between the time any person boards the aircraft with the intention of flight and all such persons have disembarked, and in which any person suffers death or serious injury, or in which the aircraft receives substantial damage.

Civil aircraft means any aircraft other than a public aircraft.

Fatal injury means any injury which results in death within 30 days of the accident.

Incident means an occurrence other than an accident, associated with the operation of an aircraft, which affects or could affect the safety of operations.

Operator means any person who causes or authorizes the operation of an aircraft, such as the owner, lessee, or bailee of an aircraft.

Public aircraft means an aircraft used only for the United States Government, or an aircraft owned and operated (except for commercial purposes) or exclusively leased for at least 90 continuous days by a government other than the United States Government, including a State, the District of Columbia, a territory or possession of the United States, or a political subdivision of that government. ''Public aircraft'' does not include a government-owned aircraft transporting property for commercial purposes and does not include a government-owned aircraft transporting passengers other than: transporting (for other than commercial purposes) crewmembers or other persons aboard the aircraft whose presence is required to perform, or is associated with the performance of, a governmental function such as firefighting, search and rescue, law enforcement, aeronautical research, or biological or geological resource management; or transporting (for other than commercial purposes) persons aboard the aircraft if the aircraft is operated by the Armed Forces or an intelligence agency of the United States. Notwithstanding any limitation relating to use of the aircraft for commercial purposes, an aircraft shall be considered to be a public aircraft without regard to whether it is operated by a unit of government on behalf of another unit of government pursuant to a cost reimbursement agreement, if the unit of government on whose behalf the operation is conducted certifies to the Administrator of the Federal Aviation Administration that the operation was necessary to respond to a significant and imminent threat to life or property (including natural resources) and that no service by a private operator was reasonably available to meet the threat.

Serious injury means any injury which: (1) Requires hospitalization for more than 48 hours, commencing within 7 days from the date of the injury was received; (2) results in a fracture of any bone (except simple fractures of fingers, toes, or nose); (3) causes severe hemorrhages, nerve, muscle, or tendon damage; (4) involves any internal organ; or (5) involves second- or third-degree burns, or any burns affecting more than 5 percent of the body surface.

Substantial damage means damage or failure which adversely affects the structural strength, performance, or flight characteristics of the aircraft, and which would normally require major repair or replacement of the affected component. Engine failure or damage limited to an engine if only one engine fails or is damaged, bent fairings or cowling, dented skin, small punctured holes in the skin or fabric, ground damage to rotor or propeller blades, and damage to landing gear, wheels, tires, flaps, engine accessories, brakes, or wingtips are not considered ''substantial damage'' for the purpose of this part.

[53 FR 36982, Sept. 23, 1988, as amended at 60 FR 40112, Aug. 7, 1995]

EFFECTIVE DATE NOTE: At 75 FR 51955, Aug. 24, 2010, § 830.2 was amended by adding the following sentence at the end of the definition of ''*Aircraft accident*'' and adding a new definition of ''*Unmanned aircraft accident*'', effective Oct. 25, 2010. For the convenience of the user, the added text is set forth as follows:

§ 830.2 Definitions

* * * * *

Aircraft accident * * * For purposes of this part, the definition of ''aircraft accident'' includes ''unmanned aircraft accident,'' as defined herein.

* * * * *

Unmanned aircraft accident means an occurrence associated with the operation of any public or civil unmanned aircraft system that takes place between the time that the system is activated with the purpose of flight and the time that the system is deactivated at the conclusion of its mission, in which:

(1) Any person suffers death or serious injury; or

(2) The aircraft has a maximum gross takeoff weight of 300 pounds or greater and sustains substantial damage.

Subpart B—Initial Notification of Aircraft Accidents, Incidents, and Overdue Aircraft

§ 830.5 Immediate notification.

The operator of any civil aircraft, or any public aircraft not operated by the Armed Forces or an intelligence agency of the United States, or any foreign aircraft shall immediately, and by the most expeditious means available, notify the nearest National Transportation Safety Board (NTSB) office[1] when:

(a) An aircraft accident or any of the following listed serious incidents occur:

(1) Flight control system malfunction or failure;

(2) Inability of any required flight crewmember to perform normal flight duties as a result of injury or illness;

(3) Failure of any internal turbine engine component that results in the escape of debris other than out the exhaust path;

(4) In-flight fire;

(5) Aircraft collision in flight;

(6) Damage to property, other than the aircraft, estimated to exceed $25,000 for repair (including materials and labor) or fair market value in the event of total loss, whichever is less.

(7) For large multiengine aircraft (more than 12,500 pounds maximum certificated takeoff weight):

(i) In-flight failure of electrical systems which requires the sustained use of an emergency bus powered by a back-up source such as a battery, auxiliary power unit, or air-driven generator to retain flight control or essential instruments;

(ii) In-flight failure of hydraulic systems that results in sustained reliance on the sole remaining hydraulic or mechanical system for movement of flight control surfaces;

(iii) Sustained loss of the power or thrust produced by two or more engines; and

(iv) An evacuation of an aircraft in which an emergency egress system is utilized.

(8) Release of all or a portion of a propeller blade from an aircraft, excluding release caused solely by ground contact;

(9) A complete loss of information, excluding flickering, from more than 50 percent of an aircraft's cockpit displays known as:

(i) Electronic Flight Instrument System (EFIS) displays;

(ii) Engine Indication and Crew Alerting System (EICAS) displays;

(iii) Electronic Centralized Aircraft Monitor (ECAM) displays; or

(iv) Other displays of this type, which generally include a primary flight display (PFD), primary navigation display (PND), and other integrated displays;

(10) Airborne Collision and Avoidance System (ACAS) resolution advisories issued either:

(i) When an aircraft is being operated on an instrument flight rules flight plan and compliance with the advisory is necessary to avert a substantial risk of collision between two or more aircraft; or

(ii) To an aircraft operating in class A airspace.

(11) Damage to helicopter tail or main rotor blades, including ground

[1] NTSB regional offices are located in the following cities: Anchorage, Alaska; Atlanta, Georgia; West Chicago, Illinois; Denver, Colorado; Arlington, Texas; Gardena (Los Angeles), California; Miami, Florida; Seattle, Washington; and Ashburn, Virginia. In addition, NTSB headquarters is located at 490 L'Enfant Plaza, SW., Washington, DC 20594. Contact information for these offices is available at *http://www.ntsb.gov*.

damage, that requires major repair or replacement of the blade(s);

(12) Any event in which an operator, when operating an airplane as an air carrier at a public-use airport on land:

(i) Lands or departs on a taxiway, incorrect runway, or other area not designed as a runway; or

(ii) Experiences a runway incursion that requires the operator or the crew of another aircraft or vehicle to take immediate corrective action to avoid a collision.

(b) An aircraft is overdue and is believed to have been involved in an accident.

[53 FR 36982, Sept. 23, 1988, as amended at 60 FR 40113, Aug. 7, 1995; 75 FR 927, Jan. 7, 2010; 75 FR 35330, June 22, 2010]

§ 830.6 Information to be given in notification.

The notification required in § 830.5 shall contain the following information, if available:

(a) Type, nationality, and registration marks of the aircraft;

(b) Name of owner, and operator of the aircraft;

(c) Name of the pilot-in-command;

(d) Date and time of the accident;

(e) Last point of departure and point of intended landing of the aircraft;

(f) Position of the aircraft with reference to some easily defined geographical point;

(g) Number of persons aboard, number killed, and number seriously injured;

(h) Nature of the accident, the weather and the extent of damage to the aircraft, so far as is known; and

(i) A description of any explosives, radioactive materials, or other dangerous articles carried.

Subpart C—Preservation of Aircraft Wreckage, Mail, Cargo, and Records

§ 830.10 Preservation of aircraft wreckage, mail, cargo, and records.

(a) The operator of an aircraft involved in an accident or incident for which notification must be given is responsible for preserving to the extent possible any aircraft wreckage, cargo, and mail aboard the aircraft, and all records, including all recording mediums of flight, maintenance, and voice recorders, pertaining to the operation and maintenance of the aircraft and to the airmen until the Board takes custody thereof or a release is granted pursuant to § 831.12(b) of this chapter.

(b) Prior to the time the Board or its authorized representative takes custody of aircraft wreckage, mail, or cargo, such wreckage, mail, or cargo may not be disturbed or moved except to the extent necessary:

(1) To remove persons injured or trapped;

(2) To protect the wreckage from further damage; or

(3) To protect the public from injury.

(c) Where it is necessary to move aircraft wreckage, mail or cargo, sketches, descriptive notes, and photographs shall be made, if possible, of the original positions and condition of the wreckage and any significant impact marks.

(d) The operator of an aircraft involved in an accident or incident shall retain all records, reports, internal documents, and memoranda dealing with the accident or incident, until authorized by the Board to the contrary.

Subpart D—Reporting of Aircraft Accidents, Incidents, and Overdue Aircraft

§ 830.15 Reports and statements to be filed.

(a) *Reports*. The operator of a civil, public (as specified in § 830.5), or foreign aircraft shall file a report on Board Form 6120.½ (OMB No. 3147–0001)[2] within 10 days after an accident, or after 7 days if an overdue aircraft is still missing. A report on an incident for which immediate notification is required by § 830.5(a) shall be filed only as requested by an authorized representative of the Board.

(b) *Crewmember statement*. Each crewmember, if physically able at the time the report is submitted, shall attach a statement setting forth the facts, conditions, and circumstances relating to

[2] Forms are available from the Board field offices (see footnote 1), from Board headquarters in Washington, DC, and from the Federal Aviation Administration Flight Standards District Offices.

the accident or incident as they appear to him. If the crewmember is incapacitated, he shall submit the statement as soon as he is physically able.

(c) *Where to file the reports.* The operator of an aircraft shall file any report with the field office of the Board nearest the accident or incident.

[53 FR 36982, Sept. 23, 1988, as amended at 60 FR 40113, Aug. 7, 1995]

PART 831—ACCIDENT/INCIDENT INVESTIGATION PROCEDURES

Sec.
831.1 Applicability of part.
831.2 Responsibility of Board.
831.3 Authority of Directors.
831.4 Nature of investigation.
831.5 Priority of Board investigations.
831.6 Request to withhold information.
831.7 Right to representation.
831.8 Investigator-in-charge.
831.9 Authority of Board representatives.
831.10 Autopsies.
831.11 Parties to the investigation.
831.12 Access to and release of wreckage, records, mail, and cargo.
831.13 Flow and dissemination of accident or incident information.
831.14 Proposed findings.

AUTHORITY: Independent Safety Board Act of 1974, as amended (49 U.S.C. 1101 *et seq.*); Federal Aviation Act of 1958, as amended (49 U.S.C. 40101 *et seq.*).

SOURCE: 53 FR 15847, May 4, 1988, unless otherwise noted.

§ 831.1 Applicability of part.

Unless otherwise specifically ordered by the National Transportation Safety Board (Board), the provisions of this part shall govern all accident or incident investigations, conducted under the authority of title VII of the Federal Aviation Act of 1958, as amended, and the Independent Safety Board Act of 1974. Rules applicable to accident hearings and reports are set forth in part 845.

§ 831.2 Responsibility of Board.

(a) *Aviation.* (1) The Board is responsible for the organization, conduct, and control of all accident and incident investigations (see § 830.2 of this chapter) within the Untied States, its territories and possessions, where the accident or incident involves any civil aircraft or certain public aircraft (as specified in § 830.5 of this chapter), including an investigation involving civil or public aircraft (as specified in § 830.5) on the one hand, and an Armed Forces or intelligence agency aircraft on the other hand. It is also responsible for investigating accidents/incidents that occur outside the United States, and which involve civil aircraft and/or certain public aircraft, when the accident/incident is not in the territory of another country (*i.e.*, in international waters).

(2) Certain aviation investigations may be conducted by the Federal Aviation Administration (FAA), pursuant to a ''Request to the Secretary of the Department of Transportation to Investigate Certain Aircraft Accidents,'' effective February 10, 1977 (the text of the request is contained in the appendix to part 800 of this chapter), but the Board determines the probable cause of such accidents or incidents.[1] Under no circumstances are aviation investigations where the portion of the investigation is so delegated to the FAA by the Board considered to be joint investigations in the sense of sharing responsibility. These investigations remain NTSB investigations.

(3) The Board is the agency charged with fulfilling the obligations of the United States under Annex 13 to the Chicago Convention on International Civil Aviation (Eighth Edition, July 1994), and does so consistent with State Department requirements and in coordination with that department. Annex 13 contains specific requirements for the notification, investigation, and reporting of certain incidents and accidents involving international civil aviation. In the case of an accident or incident in a foreign state involving civil aircraft of U.S. registry or manufacture, where the foreign state is a signatory to Annex 13 to the Chicago Convention of the International Civil Aviation Organization, the state of occurrence is responsible for the investigation. If the accident or incident occurs in a foreign state not bound by the provisions of Annex 13 to the Chicago

[1] The authority of a representative of the FAA during such investigations is the same as that of a Board investigator under this part.

Convention, or if the accident or incident involves a public aircraft (Annex 13 applies only to civil aircraft), the conduct of the investigation shall be in consonance with any agreement entered into between the United States and the foreign state.

(b) *Surface*. The Board is responsible for the investigation of: railroad accidents in which there is a fatality, substantial property damage, or which involve a passenger train (see part 840 of this chapter); major marine casualties and marine accidents involving a public and non-public vessel or involving Coast Guard functions (see part 850 of this chapter[2]); highway accidents, including railroad grade-crossing accidents, the investigation of which is selected in cooperation with the States; and pipeline accidents in which there is a fatality, significant injury to the environment, or substantial property damage.

(c) *Other accidents/incidents*. The Board is also responsible for the investigation of an accident/incident that occurs in connection with the transportation of people or property which, in the judgment of the Board, is catastrophic, involves problems of a recurring character, or would otherwise carry out the policy of the Independent Safety Board Act of 1974. This authority includes, but is not limited to, marine and boating accidents and incidents not covered by part 850 of this chapter, and accidents/incidents selected by the Board involving transportation and/or release of hazardous materials.

[62 FR 3806, Jan. 27, 1997]

§ 831.3 Authority of Directors.

The Directors, Office of Aviation Safety, Office of Railroad Safety, Office of Highway Safety, Office of Marine Safety, and Office of Pipeline and Hazardous Materials Safety, subject to the provisions of § 831.2 and part 800 of this chapter, may order an investigation into any accident or incident.

[63 FR 71606, Dec. 29, 1998]

[2] Part 850 also governs the conduct of certain investigations in which the Board and the Coast Guard participate jointly.

§ 831.4 Nature of investigation.

Accident and incident investigations are conducted by the Board to determine the facts, conditions, and circumstances relating to an accident or incident and the probable cause(s) thereof. These results are then used to ascertain measures that would best tend to prevent similar accidents or incidents in the future. The investigation includes the field investigation (on-scene at the accident, testing, teardown, etc.), report preparation, and, where ordered, a public hearing. The investigation results in Board conclusions issued in the form of a report or ''brief'' of the incident or accident. Accident/incident investigations are fact-finding proceedings with no formal issues and no adverse parties. They are not subject to the provisions of the Administrative Procedure Act (5 U.S.C. 504 *et seq.*), and are not conducted for the purpose of determining the rights or liabilities of any person.

[62 FR 3806, Jan. 27, 1997]

§ 831.5 Priority of Board investigations.

Any investigation of an accident or incident conducted by the Safety Board directly or pursuant to the appendix to part 800 of this chapter (except major marine investigations conducted under 49 U.S.C. 1131(a)(1)(E)) has priority over all other investigations of such accident or incident conducted by other Federal agencies. The Safety Board shall provide for the appropriate participation by other Federal agencies in any such investigation, except that such agencies may not participate in the Safety Board's determination of the probable cause of the accident or incident. Nothing in this section impairs the authority of other Federal agencies to conduct investigations of an accident or incident under applicable provisions of law or to obtain information directly from parties involved in, and witnesses to, the transportation accident or incident, provided they do so without interfering with the Safety Board's investigation. The Safety Board and other Federal agencies shall assure that appropriate information obtained or developed in the course of

their investigations is exchanged in a timely manner.

[62 FR 3807, Jan. 27, 1997]

§ 831.6 Request to withhold information.

(a) *Trade Secrets Act (18 U.S.C. 1905), Exemption 4 of the Freedom of Information Act (5 U.S.C. 552) (FOIA), and The Independent Safety Board Act of 1974, as amended*—(1) *General.* The Trade Secrets Act provides criminal penalties for unauthorized government disclosure of trade secrets and other specified confidential commercial information. The Freedom of Information Act authorizes withholding of such information; however, the Independent Safety Board Act, at 49 U.S.C. 1114(b), provides that the Board may, under certain circumstances, disclose information related to trade secrets.

(2) *Procedures.* Information submitted to the Board that the submitter believes qualifies as a trade secret or confidential commercial information subject either to the Trade Secrets Act or FOIA Exemption 4 shall be so identified by the submitter on each and every page of such document. The Board shall give the submitter of any information so identified, or information the Board has substantial reason to believe qualifies as a trade secret or confidential commercial information subject either to the Trade Secrets Act or FOIA Exemption 4, the opportunity to comment on any contemplated disclosure, pursuant to 49 U.S.C. 1114(b). In all instances where the Board determines to disclose pursuant to 49 U.S.C. 1114(b) and/or 5 U.S.C. 552, at least 10 days' notice will be provided the submitter. Notice may not be provided the submitter when disclosure is required by a law other than FOIA if the information is not identified by the submitter as qualifying for withholding, as is required by this paragraph, unless the Board has substantial reason to believe that disclosure would result in competitive harm.

(3) *Voluntarily-provided safety information.* It is the policy of the Safety Board that commercial, safety-related information provided to it voluntarily and not in the context of particular accident/incident investigations will not be disclosed. Reference to such information for the purposes of safety recommendations will be undertaken with consideration for the confidential nature of the underlying database(s).

(b) *Other.* Any person may make written objection to the public disclosure of any other information contained in any report or document filed, or otherwise obtained by the Board, stating the grounds for such objection. The Board, on its own initiative or if such objection is made, may order such information withheld from public disclosure when, in its judgment, the information may be withheld under the provisions of an exemption to the Freedom of Information Act (5 U.S.C. 552, see part 801 of this chapter), and its release is found not to be in the public interest.

[62 FR 3807, Jan. 27, 1997]

§ 831.7 Right to representation.

Any person interviewed by an authorized representative of the Board during the investigation, regardless of the form of the interview (sworn, unsworn, transcribed, not transcribed, etc.), has the right to be accompanied, represented, or advised by an attorney or non-attorney representative.

[62 FR 3807, Jan. 27, 1997]

§ 831.8 Investigator-in-charge.

The designated investigator-in-charge (IIC) organizes, conducts, controls, and manages the field phase of the investigation, regardless of whether a Board Member is also on-scene at the accident or incident site. (The role of the Board member at the scene of an accident investigation is as the official spokesperson for the Safety Board.) The IIC has the responsibility and authority to supervise and coordinate all resources and activities of all personnel, both Board and non-Board, involved in the on-site investigation. The IIC continues to have considerable organizational and management responsibilities throughout later phases of the investigation, up to and including Board consideration and adoption of a report or brief of probable cause(s).

[62 FR 3807, Jan. 27, 1997]

§ 831.9 Authority of Board representatives.

(a) *General.* Any employee of the Board, upon presenting appropriate credentials, is authorized to enter any property where an accident/incident subject to the Board's jurisdiction has occurred, or wreckage from any such accident/incident is located, and do all things considered necessary for proper investigation. Further, upon demand of an authorized representative of the Board and presentation of credentials, any Government agency, or person having possession or control of any transportation vehicle or component thereof, any facility, equipment, process or controls relevant to the investigation, or any pertinent records or memoranda, including all files, hospital records, and correspondence then or thereafter existing, and kept or required to be kept, shall forthwith permit inspection, photographing, or copying thereof by such authorized representative for the purpose of investigating an accident or incident, or preparing a study, or related to any special investigation pertaining to safety or the prevention of accidents. The Safety Board may issue a subpoena, enforceable in Federal district court, to obtain testimony or other evidence. Authorized representatives of the Board may question any person having knowledge relevant to an accident/incident, study, or special investigation. Authorized representatives of the Board also have exclusive authority, on behalf of the Board, to decide the way in which any testing will be conducted, including decisions on the person that will conduct the test, the type of test that will be conducted, and any individual who will witness the test.

(b) *Aviation.* Any employee of the Board, upon presenting appropriate credentials, is authorized to examine and test to the extent necessary any civil or public aircraft (as specified in § 830.5), aircraft engine, propeller, appliance, or property aboard such aircraft involved in an accident in air commerce.

(c) *Surface.* (1) Any employee of the Board, upon presenting appropriate credentials, is authorized to test or examine any vehicle, vessel, rolling stock, track, pipeline component, or any part of any such item when such examination or testing is determined to be required for purposes of such investigation.

(2) Any examination or testing shall be conducted in such a manner so as not to interfere with or obstruct unnecessarily the transportation services provided by the owner or operator of such vehicle, vessel, rolling stock, track, or pipeline component, and shall be conducted in such a manner so as to preserve, to the maximum extent feasible, any evidence relating to the transportation accident, consistent with the needs of the investigation and with the cooperation of such owner or operator.

[53 FR 15847, May 4, 1988, as amended at 60 FR 40113, Aug. 7, 1995; 62 FR 3807, Jan. 27, 1997]

§ 831.10 Autopsies.

The Board is authorized to obtain, with or without reimbursement, a copy of the report of autopsy performed by State or local officials on any person who dies as a result of having been involved in a transportation accident within the jurisdiction of the Board. The investigator-in-charge, on behalf of the Board, may order an autopsy or seek other tests of such persons as may be necessary to the investigation, provided that to the extent consistent with the needs of the accident investigation, provisions of local law protecting religious beliefs with respect to autopsies shall be observed.

§ 831.11 Parties to the investigation.

(a) *All Investigations, regardless of mode.* (1) The investigator-in-charge designates parties to participate in the investigation. Parties shall be limited to those persons, government agencies, companies, and associations whose employees, functions, activities, or products were involved in the accident or incident and who can provide suitable qualified technical personnel actively to assist in the investigation. Other than the FAA in aviation cases, no other entity is afforded the right to participate in Board investigations.

(2) Participants in the investigation (*i.e.*, party representatives, party coordinators, and/or the larger party organization) shall be responsive to the direction of Board representatives and may lose party status if they do not comply with their assigned duties and activity proscriptions or instructions, or if they conduct themselves in a manner prejudicial to the investigation.

(3) No party to the investigation shall be represented in any aspect of the NTSB investigation by any person who also represents claimants or insurers. No party representative may occupy a legal position (see § 845.13 of this chapter). Failure to comply with these provisions may result in sanctions, including loss of status as a party.

(4) Title 49, United States Code § 1132 provides for the appropriate participation of the FAA in Board investigations, and § 1131(a)(2) provides for such participation by other departments, agencies, or instrumentalities. The FAA and those other entities that meet the requirements of paragraph (a)(1) of this section will be parties to the investigation with the same rights and privileges and subject to the same limitations as other parties, provided however that representatives of the FAA need not sign the ''Statement of Party Representatives to NTSB Investigation'' (see paragraph (b) of this section).

(b) *Aviation investigations.* In addition to compliance with the provisions of paragraph (a) of this section, and to assist in ensuring complete understanding of the requirements and limitations of party status, all party representatives in aviation investigations shall sign ''Statement of Party Representatives to NTSB Investigation'' immediately upon attaining party representative status. Failure timely to sign that statement may result in sanctions, including loss of status as a party.

[62 FR 3808, Jan. 27, 1997, as amended at 63 FR 71606, Dec. 29, 1998]

§ 831.12 Access to and release of wreckage, records, mail, and cargo.

(a) Only the Board's accident investigation personnel, and persons authorized by the investigator-in-charge to participate in any particular investigation, examination or testing shall be permitted access to wreckage, records, mail, or cargo in the Board's custody.

(b) Wreckage, records, mail, and cargo in the Board's custody shall be released by an authorized representative of the Board when it is determined that the Board has no further need of such wreckage, mail, cargo, or records. When such material is released, Form 6120.15, ''*Release of Wreckage,*'' will be completed, acknowledging receipt.

[62 FR 3808, Jan. 27, 1997]

§ 831.13 Flow and dissemination of accident or incident information.

(a) Release of information during the field investigation, particularly at the accident scene, shall be limited to factual developments, and shall be made only through the Board Member present at the accident scene, the representative of the Board's Office of Public Affairs, or the investigator-in-charge.

(b) All information concerning the accident or incident obtained by any person or organization participating in the investigation shall be passed to the IIC through appropriate channels before being provided to any individual outside the investigation. Parties to the investigation may relay to their respective organizations information necessary for purposes of prevention or remedial action. However, no information concerning the accident or incident may be released to any person not a party representative to the investigation (including non-party representative employees of the party organization) before initial release by the Safety Board without prior consultation and approval of the IIC.

[53 FR 15847, May 4, 1988, as amended at 62 FR 3808, Jan. 27, 1997]

§ 831.14 Proposed findings.

(a) *General.* Any person, government agency, company, or association whose employees, functions, activities, or products were involved in an accident or incident under investigation may submit to the Board written proposed findings to be drawn from the evidence produced during the course of the investigation, a proposed probable cause,

and/or proposed safety recommendations designed to prevent future accidents.

(b) *Timing of submissions*. To be considered, these submissions must be received before the matter is calendared for consideration at a Board meeting. All written submissions are expected to have been presented to staff in advance of the formal scheduling of the meeting. This procedure ensures orderly and thorough consideration of all views.

(c) *Exception*. This limitation does not apply to safety enforcement cases handled by the Board pursuant to part 821 of this chapter. Separate *ex parte* rules, at part 821, subpart J, apply to those proceedings.

[62 FR 3808, Jan. 27, 1997]

PART 835—TESTIMONY OF BOARD EMPLOYEES

Sec.
835.1 Purpose.
835.2 Definitions.
835.3 Scope of permissible testimony.
835.4 Use of reports.
835.5 Manner in which testimony is given in civil litigation.
835.6 Request for testimony in civil litigation.
835.7 Testimony of former Board employees.
835.8 Testimony by current Board employees regarding prior activity.
835.9 Procedure in the event of a subpoena in civil litigation.
835.10 Testimony in Federal, State, or local criminal investigations and other proceedings.
835.11 Obtaining Board accident reports, factual accident reports, and supporting information.

AUTHORITY: 5 U.S.C. 301; Independent Safety Board Act of 1974, as amended (49 U.S.C. 1101 *et seq.*).

§ 835.1 Purpose.

This part prescribes policies and procedures regarding the testimony of employees of the National Transportation Safety Board (Board) in suits or actions for damages and criminal proceedings arising out of transportation accidents when such testimony is in an official capacity and arises out of or is related to accident investigation. The purpose of this part is to ensure that the time of Board employees is used only for official purposes, to avoid embroiling the Board in controversial issues that are not related to its duties, to avoid spending public funds for non-Board purposes, to preserve the impartiality of the Board, and to prohibit the discovery of opinion testimony.

[63 FR 71607, Dec. 29, 1998]

§ 835.2 Definitions.

Accident, for purposes of this part includes ''incident.''

Board accident report means the report containing the Board's determinations, including the probable cause of an accident, issued either as a narrative report or in a computer format (''briefs'' of accidents). Pursuant to section 701(e) of the Federal Aviation Act of 1958 (FA Act), and section 304(c) of the Independent Safety Board Act of 1974 (49 U.S.C. 1154(b)) (Safety Act), no part of a Board accident report may be admitted as evidence or used in any suit or action for damages growing out of any matter mentioned in such reports.

Factual accident report means the report containing the results of the investigator's investigation of the accident. The Board does not object to, and there is no statutory bar to, admission in litigation of factual accident reports. In the case of a major investigation, group chairman factual reports are factual accident reports.

[63 FR 71607, Dec. 29, 1998, as amended at 64 FR 5622, Feb. 4, 1999]

§ 835.3 Scope of permissible testimony.

(a) Section 701(e) of the FA Act and section 304(c) of the Safety Act preclude the use or admission into evidence of Board accident reports in any suit or action for damages arising from accidents. These sections reflect Congress' ''strong * * * desire to keep the Board free of the entanglement of such suits.'' Rep. No. 93–1192, 93d Cong., 2d Sess., 44 (1974), and serve to ensure that the Board does not exert an undue influence on litigation. The purposes of these sections would be defeated if expert opinion testimony of Board employees, which may be reflected in the views of the Board expressed in its reports, were admitted in evidence or

used in litigation arising out of an accident. The Board relies heavily upon its investigators' opinions in its deliberations. Furthermore, the use of Board employees as experts to give opinion testimony would impose a significant administrative burden on the Board's investigative staff. Litigants must obtain their expert witnesses from other sources.

(b) For the reasons stated in paragraph (a) of this section and § 835.1, Board employees may only testify as to the factual information they obtained during the course of an investigation, including factual evaluations embodied in their factual accident reports. However, they shall decline to testify regarding matters beyond the scope of their investigation, and they shall not give any expert or opinion testimony.

(c) Board employees may testify about the firsthand information they obtained during an investigation that is not reasonably available elsewhere, including observations recorded in their own factual accident reports. Consistent with the principles cited in § 835.1 and this section, current Board employees are not authorized to testify regarding other employee's reports, or other types of Board documents, including but not limited to safety recommendations, safety studies, safety proposals, safety accomplishments, reports labeled studies, and analysis reports, as they contain staff analysis and/or Board conclusions.

(d) Briefs of accidents may be released in conjunction with factual accident reports. Nevertheless, they are not part of those reports and are not to be admitted in evidence or used in a deposition approved under this part.

(e) Not all material in a factual accident report may be the subject of testimony. The purpose of the factual accident report, in great part, is to inform the public at large, and as a result the factual accident report may contain information and conclusions for which testimony is prohibited by this part.

(f) No employee may testify in any matter absent advance approval by the General Counsel as provided in this part.

[55 FR 41541, Oct. 12, 1990, as amended at 63 FR 71607, Dec. 29, 1998; 64 FR 5622, Feb. 4, 1999]

§ 835.4 Use of reports.

(a) As a testimonial aid and to refresh their memories, Board employees may use copies of the factual accident report they prepared, and may refer to and cite from that report during testimony.

(b) Consistent with section 701(e) of the FA Act and section 304(c) of the Safety Act, a Board employee may not use the Board's accident report for any purpose during his testimony.

[55 FR 41541, Oct. 12, 1990, as amended at 63 FR 71607, Dec. 29, 1998]

§ 835.5 Manner in which testimony is given in civil litigation.

(a) Testimony of Board employees with unique, firsthand information may be made available for use in civil actions or civil suits for damages arising out of accidents through depositions or written interrogatories. Board employees are not permitted to appear and testify in court in such actions.

(b) Normally, depositions will be taken and interrogatories answered at the Board's office to which the employee is assigned, and at a time arranged with the employee reasonably fixed to avoid substantial interference with the performance of his duties.

(c) Board employees are authorized to testify only once in connection with any investigation they have made of an accident. Consequently, when more than one civil lawsuit arises as a result of an accident, it shall be the duty of counsel seeking the employee's deposition to ascertain the identity of all parties to the multiple lawsuits and their counsel, and to advise them of the fact that a deposition has been granted, so that all interested parties may be afforded the opportunity to participate therein.

(d) Upon completion of the deposition of a Board employee, the original of the transcript will be provided the deponent for signature and correction, which the Board does not waive. A copy of the transcript of the testimony and any videotape shall be furnished, at the expense of the party requesting the deposition, to the Board's General

Counsel at Washington, DC headquarters for the Board's files.

[55 FR 41541, Oct. 12, 1990, as amended at 63 FR 71607, Dec. 29, 1998]

§ 835.6 Request for testimony in civil litigation.

(a) A written request for testimony by deposition or interrogatories of a Board employee relating to an accident shall be addressed to the General Counsel, who may approve or deny the request consistent with this part. Such request shall set forth the title of the civil case, the court, the type of accident (aviation, railroad, etc.), the date and place of the accident, the reasons for desiring the testimony, and a showing that the information desired is not reasonably available from other sources.

(b) Where testimony is sought in connection with civil litigation, the General Counsel shall not approve it until the factual accident report is issued (*i.e.*, in the public docket). In the case of major accident investigations where there are multiple factual reports issued and testimony of group chairmen is sought, the General Counsel may approve depositions regarding completed group factual reports at any time after incorporation of the report in the public docket. However, no deposition will be approved prior to the Board's public hearing, where one is scheduled or contemplated. The General Counsel may approve a deposition in the absence of a factual accident report when such a report will not be issued but all staff fact-finding is complete.

(c) The General Counsel shall attach to the approval of any deposition such reasonable conditions as may be deemed appropriate in order that the testimony will be consistent with § 835.1, will be limited to the matters delineated in § 835.3, will not interfere with the performance of the duties of the employee as set forth in § 835.5, and will otherwise conform to the policies of this part.

(d) A subpoena shall not be served upon a Board employee in connection with the taking of a deposition in civil litigation.

[63 FR 71607, Dec. 29, 1998]

§ 835.7 Testimony of former Board employees.

It is not necessary to request Board approval for testimony of a former Board employee, nor is testimony limited to depositions. However, the scope of permissible testimony continues to be constrained by all the limitations set forth in § 835.3 and § 835.4.

[63 FR 71608, Dec. 29, 1998]

§ 835.8 Testimony by current Board employees regarding prior activity.

Any testimony regarding any accident within the Board's jurisdiction, or any expert testimony arising from employment prior to Board service is prohibited absent approval by the General Counsel. Approval shall only be given if testimony will not violate § 835.1 and § 835.3, and is subject to whatever conditions the General Counsel finds necessary to promote the purposes of this part as set forth in § 835.1 and § 835.3.

[63 FR 71608, Dec. 29, 1998]

§ 835.9 Procedure in the event of a subpoena in civil litigation.

(a) If the Board employee has received a subpoena to appear and testify in connection with civil litigation, a request for his deposition shall not be approved until the subpoena has been withdrawn.

(b) Upon receipt of a subpoena, the employee shall immediately notify the General Counsel and provide all information requested by the General Counsel.

(c) The General Counsel shall determine the course of action to be taken and will so advise the employee.

[63 FR 71608, Dec. 29, 1998]

§ 835.10 Testimony in Federal, State, or local criminal investigations and other proceedings.

(a) As with civil litigation, the Board prefers that testimony be taken by deposition if court rules permit, and that testimony await the issuance of the factual accident report. The Board recognizes, however, that in the case of coroner's inquests and grand jury proceedings this may not be possible. The Board encourages those seeking testimony of Board employees to contact the General Counsel as soon as such

testimony is being considered. Whenever the intent to seek such testimony is communicated to the employee, he shall immediately notify the General Counsel.

(b) In any case, Board employees are prohibited from testifying in any civil, criminal, or other matter, either in person or by deposition or interrogatories, absent advance approval of the General Counsel. The Board discourages the serving of a subpoena for testimony but, if issued, it should be served on the General Counsel, rather than the employee.

(c) If permission to testify by deposition or in person is granted, testimony shall be limited as set forth in § 835.3. Only factual testimony is authorized; no expert or opinion testimony shall be given.

[63 FR 71608, Dec. 29, 1998]

§ 835.11 Obtaining Board accident reports, factual accident reports, and supporting information.

It is the responsibility of the individual requesting testimony to obtain desired documents. There are a number of ways to obtain Board accident reports, factual accident reports, and accompanying accident docket files. Our rules at parts 801 and 837 of this chapter explain our procedures, as will our web site, at *www.ntsb.gov*. Or, you may call our Public Inquiries Branch, at (800) 877–6799. Documents will not be supplied by witnesses at depositions, nor will copying services be provided by deponents.

[63 FR 71608, Dec. 29, 1998]

PART 837—PRODUCTION OF RECORDS IN LEGAL PROCEEDINGS

Sec.

837.1 Purpose and scope.
837.2 Applicability.
837.3 Published reports, material contained in the public accident investigation dockets, and accident database data.
837.4 Other material.

AUTHORITY: 49 U.S.C. 1101 *et seq.*; 40101 *et seq.*; 5 U.S.C. 301.

SOURCE: 62 FR 27703, May 21, 1997, unless otherwise noted.

§ 837.1 Purpose and scope.

(a) This part sets forth procedures to be followed when requesting material for use in legal proceedings (including administrative proceedings) in which the National Transportation Safety Board (NTSB or Board) is not a party, and procedures to be followed by the employee upon receipt of a subpoena, order, or other demand (collectively referred to here as a demand) by a court or other competent authority or by a private litigant. ''Material,'' as used in this part, means any type of physical or documentary evidence, including but not limited to paper documents, electronic media, videotapes, audiotapes, etc.

(b) The purposes of this part are to:

(1) Conserve the time of employees for conducting official business;

(2) Minimize the possibility of involving the NTSB in controversial issues not related to its mission;

(3) Maintain the impartiality of the Board among private litigants;

(4) Avoid spending the time and money of the United States for private purposes; and

(5) To protect confidential, sensitive information, and the deliberative processes of the Board.

§ 837.2 Applicability.

This part applies to requests to produce material concerning information acquired in the course of performing official duties or because of the employee's official status. Specifically, this part applies to requests for: material contained in NTSB files; and any information or material acquired by an employee of the NTSB in the performance of official duties or as a result of the employee's status. Two sets of procedures are here established, dependent on the type of material sought. Rules governing requests for employee testimony, as opposed to material production, can be found at 49 CFR part 835. Document production shall not accompany employee testimony, absent compliance with this part and General Counsel approval.

§ 837.3 Published reports, material contained in the public accident investigation dockets, and accident database data.

(a) Demands for material contained in the NTSB's official public docket files of its accident investigations, or its computerized accident database(s) shall be submitted, in writing, to the Public Inquiries Branch. Demands for specific published reports and studies should be submitted to the National Technical Information Service. The Board does not maintain stock of these items. Demands for information collected in particular accident investigations and made a part of the public docket should be submitted to the Public Inquiries Branch or, directly, to our contractor. For information regarding the types of documents routinely issued by the Board, see 49 CFR part 801.

(b) No subpoena shall be issued to obtain materials subject to this paragraph, and any subpoena issued shall be required to be withdrawn prior to release of the requested information. Payment of reproduction fees may be required in advance.

§ 837.4 Other material.

(a) *Production prohibited unless approved.* Except in the case of the material referenced in § 837.3, no employee or former employee of NTSB shall, in response to a demand of a private litigant, court, or other authority, produce any material contained in the files of the NTSB (whether or not agency records under 5 U.S.C. 552) or produce any material acquired as part of the performance of the person's official duties or because of the person's official status, without the prior written approval of the General Counsel.

(b) *Procedures to be followed for the production of material under this paragraph.* (1) All demands for material shall be submitted to the General Counsel at NTSB headquarters, Washington, DC 20594. If an employee receives a demand, he shall forward it immediately to the General Counsel.

(2) Each demand must contain an affidavit by the party seeking the material or his attorney setting forth the material sought and its relevance to the proceeding, and containing a certification, with support, that the information is not available from other sources, including Board materials described in §§ 837.3 and part 801 of this chapter.

(3) In the absence of General Counsel approval of a demand, the employee is not authorized to comply with the demand.

(4) The General Counsel shall advise the requester of approval or denial of the demand, and may attach whatever conditions to approval considered appropriate or necessary to promote the purposes of this part. The General Counsel may also permit exceptions to any requirement in this part when necessary to prevent a miscarriage of justice, or when the exception is in the best interests of the NSTB and/or the United States.

PART 840—RULES PERTAINING TO NOTIFICATION OF RAILROAD ACCIDENTS

Sec.
840.1 Applicability.
840.2 Definitions.
840.3 Notification of railroad accidents.
840.4 Information to be given in notification.
840.5 Inspection, examination and testing of physical evidence.
840.6 Priority of Board investigations.

AUTHORITY: Sec. 304(a)(1)(c), Independent Safety Board Act of 1974, as amended (49 U.S.C. 1903).

§ 840.1 Applicability.

This part contains the Safety Board's accident notification requirements, and its authority for inspection, examination, and testing of physical evidence, and describes the exercise of the Safety Board's priority accorded to its activities when investigating railroad accidents.

[47 FR 49408, Nov. 1, 1982]

§ 840.2 Definitions.

As used in this part, the following words or phrases are defined as follows:

(a) *Railroad* means any system of surface transportation of persons or property over rails. It includes, but is not limited to, line-haul freight and passenger-carrying railroads, and rapid

transit, commuter, scenic, subway, and elevated railways.

(b) *Accident* means any collision, derailment, or explosion involving railroad trains, locomotives, and cars; or any other loss-causing event involving the operation of such railroad equipment that results in a fatality to a passenger or employee, or the emergency evacuation of persons.

(c) *Joint operations* means rail operations conducted on a track used jointly or in common by two or more railroads subject to this part, or operation of a train, locomotive, or car by one railroad over the track of another railroad.

(d) *Fatality* means the death of a person either at the time an accident occurs or within 24 hours thereafter.

[41 FR 13925, Apr. 1, 1976, as amended at 47 FR 49408, Nov. 1, 1982]

§ 840.3 Notification of railroad accidents.

The operator of a railroad shall notify the Board by telephoning the National Response Center at telephone 800–424–0201 at the earliest practicable time after the occurrence of any one of the following railroad accidents:

(a) No later than 2 hours after an accident which results in:

(1) A passenger or employee fatality or serious injury to two or more crewmembers or passengers requiring admission to a hospital;

(2) The evacuation of a passenger train;

(3) Damage to a tank car or container resulting in release of hazardous materials or involving evacuation of the general public; or

(4) A fatality at a grade crossing.

(b) No later than 4 hours after an accident which does not involve any of the circumstances enumerated in paragraph (a) of this section but which results in:

(1) Damage (based on a preliminary gross estimate) of $150,000 or more for repairs, or the current replacement cost, to railroad and nonrailroad property; or

(2) Damage of $25,000 or more to a passenger train and railroad and nonrailroad property.

(c) Accidents involving joint operations must be reported by the railroad that controls the track and directs the movement of trains where the accident has occurred.

(d) Where an accident for which notification is required by paragraph (a) or (b) of this section occurs in a remote area, the time limits set forth in that paragraph shall commence from the time the first railroad employee who was not at the accident site at the time of its occurrence has received notice thereof.

[53 FR 49152, Dec. 6, 1988]

§ 840.4 Information to be given in notification.

The notice required by § 840.3 shall include the following information:

(a) Name and title of person reporting.

(b) Name of railroad.

(c) Location of accident (relate to nearest city).

(d) Time and date of accident.

(e) Description of accident.

(f) Casualties:

(1) Fatalities.

(2) Injuries.

(g) Property damage (estimate).

(h) Name and telephone number of person from whom additional information may be obtained.

[41 FR 13925, Apr. 1, 1976]

§ 840.5 Inspection, examination and testing of physical evidence.

(a) Any employee of the Safety Board, upon presenting appropriate credentials is authorized to enter any property wherein a transportation accident has occurred or wreckage from any such accident is located and do all things necessary for proper investigation, including examination or testing of any vehicle, rolling stock, track, or any part of any part of any such item when such examination or testing is determined to be required for purposes of such investigation.

(b) Any examination or testing shall be conducted in such a manner so as not to interfere with or obstruct unnecessarily the transportation services provided by the owner or operator of such vehicle, rolling stock, or track, and shall be conducted in such a manner so as to preserve, to the maximum extent feasible, any evidence relating

to the transportation accident, consistent with the needs of the investigation and with the cooperation of such owner or operator. The employee may inspect, at reasonable times, records, files, papers, processes, controls, and facilities relevant to the investigation of such accident. Each inspection shall be commenced and completed promptly and the results of such inspection, examination, or test made available to the parties.

[47 FR 49408, Nov. 1, 1982]

§ 840.6 Priority of Board investigations.

Any investigation of an accident conducted by the Safety Board shall have priority over all other investigations of such accident conducted by other Federal agencies. The Safety Board shall provide for the appropriate participation by other Federal agencies in any such investigation, except that such agencies may not participate in the Safety Board's determination of the probable cause of the accident. Nothing in this section impairs the authority of other Federal agencies to conduct investigations of an accident under applicable provisions of law or to obtain information directly from parties involved in, and witnesses to, the transportation accident. The Safety Board and other Federal agencies shall assure that appropriate information obtained or developed in the course of their investigations is exchanged in a timely manner.

[47 FR 49408, Nov. 1, 1982]

PART 845—RULES OF PRACTICE IN TRANSPORTATION; ACCIDENT/INCIDENT HEARINGS AND REPORTS

Sec.

845.1 Applicability.
845.2 Nature of hearing.
845.3 Sessions open to the public.

Subpart A—Initial Procedure

845.10 Determination to hold hearing.
845.11 Board of inquiry.
845.12 Notice of hearing.
845.13 Designation of parties.

Subpart B—Conduct of Hearing

845.20 Powers of chairman of board of inquiry.
845.21 Hearing officer.
845.22 Technical panel.
845.23 Prehearing conference.
845.24 Right of representation.
845.25 Examination of witnesses.
845.26 Evidence.
845.27 Proposed findings.
845.28 Stenographic transcript.
845.29 Payment of witnesses.

Subpart C—Board Reports

845.40 Accident report.
845.41 Petitions for reconsideration or modification.

Subpart D—Public Record

845.50 Public docket.
845.51 Investigation to remain open.

AUTHORITY: Title VII, Federal Aviation Act of 1958, as amended (49 U.S.C. 1441 *et seq.*); and the Independent Safety Board Act of 1974, Pub. L. 93–633, 88 Stat. 2166 (49 U.S.C. 1901 *et seq.)*.

SOURCE: 44 FR 34419, June 14, 1979, unless otherwise noted.

§ 845.1 Applicability.

Unless otherwise specifically ordered by the National Transportation Safety Board (Board), the provisions of this part shall govern all transportation accident investigation hearings conducted under the authority of section 304(b) of the Independent Safety Board Act of 1974 (49 U.S.C. 1903(b)) and accident reports issued by the Board.

§ 845.2 Nature of hearing.

Transportation accident hearings are convened to assist the Board in determining cause or probable cause of an accident, in reporting the facts, conditions, and circumstances of the accident, and in ascertaining measures which will tend to prevent accidents and promote transportation safety. Such hearings are factfinding proceedings with no formal issues and no adverse parties and are not subject to the provisions of the Administrative Procedure Act (Pub. L. 89–554, 80 Stat. 384 (5 U.S.C. 554)).

[44 FR 34419, June 14, 1979; 44 FR 39181, July 5, 1979]

§ 845.3 Sessions open to the public.

(a) All hearings shall normally be open to the public (subject to the provision that any person present shall not be allowed at any time to interfere with the proper and orderly functioning of the board of inquiry).

(b) Sessions shall not be open to the public when evidence of a classified nature or which affects national security is to be received.

Subpart A—Initial Procedure

§ 845.10 Determination to hold hearing.

The Board may order a public hearing as part of an accident investigation whenever such hearing is deemed necessary in the public interest: *Provided*, that if a quorum of the Board is not immediately available in the event of a catastrophic accident, the determination to hold a public hearing may be made by the Chairman of the Board.

§ 845.11 Board of inquiry.

The board of inquiry shall consist of a Member of the Board who shall be chairman of the board of inquiry, and such other employees as may be designated by the chairman of the board of inquiry. Assignment of a Member to serve as the chairman of each board of inquiry shall be determined by the Board. The board of inquiry shall examine witnesses and secure, in the form of a public record, all known facts pertaining to the accident or incident and surrounding circumstances and conditions from which cause or probable cause may be determined and recommendations for corrective action may be formulated.

[49 FR 32853, Aug. 17, 1984]

§ 845.12 Notice of hearing.

The chairman of the board of inquiry shall designate a time and place for the hearing which meets the needs of the Board. Notice to all known interested persons shall be given.

§ 845.13 Designation of parties.

(a) The chairman of the board of inquiry shall designate as parties to the hearing those persons, agencies, companies, and associations whose participation in the hearing is deemed necessary in the public interest and whose special knowledge will contribute to the development of pertinent evidence. Parties shall be represented by suitable qualified technical employees or members who do not occupy legal positions.

(b) No party shall be represented by any person who also represents claimants or insurers. Failure to comply with this provision shall result in loss of status as a party.

[44 FR 34419, June 14, 1979, as amended at 51 FR 7278, Mar. 3, 1986]

Subpart B—Conduct of Hearing

§ 845.20 Powers of chairman of board of inquiry.

The chairman of the board of inquiry, or his designee, shall have the following powers:

(a) To designate parties to the hearing and revoke such designations;

(b) To open, continue, or adjourn the hearing;

(c) To determine the admissibility of and to receive evidence and to regulate the course of the hearing;

(d) To dispose of procedural requests or similar matters; and

(e) To take any other action necessary or incident to the orderly conduct of the hearing.

[44 FR 34419, June 14, 1979; 44 FR 39181, July 5, 1979]

§ 845.21 Hearing officer.

The hearing officer, upon designation by the Chairman of the Board, shall have the following powers:

(a) To give notice concerning the time and place of hearing;

(b) To administer oaths and affirmations to witnesses; and

(c) To issue subpenas requiring the attendance and testimony of witnesses and production of documents.

§ 845.22 Technical panel.

The Director, Bureau of Accident Investigation, or the Director, Bureau of Field Operations, shall designate members of the Board's technical staff to participate in the hearing and initially develop the testimony of witnesses.

[49 FR 32853, Aug. 17, 1984]

§ 845.23 Prehearing conference.

(a) Except as provided in paragraph (d) of this section for expedited hearings, the chairman of the board of inquiry shall hold a prehearing conference with the parties to the hearing at a convenient time and place prior to the hearing. At such prehearing conference, the parties shall be advised of the witnesses to be called at the hearing, the areas in which they will be examined, and the exhibits which will be offered in evidence.

(b) Parties shall submit at the prehearing conference copies of any additional documentary exhibits they desire to offer. (Copies of all exhibits proposed for admission by the board of inquiry and the parties shall be furnished to the board of inquiry and to all parties, insofar as available at that time.)

(c) A party who, at the time of the prehearing conference, fails to advise the chairman of the board of inquiry of additional exhibits he intends to submit, or additional witnesses he desires to examine, shall be precluded from introducing such evidence unless the chairman of the board of inquiry determines for good cause shown that such evidence should be admitted.

(d) *Expedited hearings.* When time permits, the chairman of the board of inquiry may hold a prehearing conference. In the event that an expedited hearing is held, the requirements in paragraphs (b) and (c) of this section concerning the identification of witnesses, exhibits or other evidence may be waived by the chairman of the board of inquiry.

§ 845.24 Right of representation.

Any person who appears to testify at a public hearing shall be accorded the right to be accompanied, represented, or advised by counsel or by any other duly qualified representative.

§ 845.25 Examination of witnesses.

(a) Witnesses shall be initially examined by the board of inquiry or its technical panel. Following such examination, parties to the hearing shall be given the opportunity to examine such witnesses.

(b) Materiality, relevancy, and competency of witness testimony, exhibits, or physical evidence shall not be the subject of objections in the legal sense by a party to the hearing or any other person. Such matters shall be controlled by rulings of the chairman of the board of inquiry on his own motion. If the examination of a witness by a party is interrupted by a ruling of the chairman of the board of inquiry, opportunity shall be given to show materiality, relevancy, or competency of the testimony or evidence sought to be elicited from the witness.

§ 845.26 Evidence.

The chairman of the board of inquiry shall receive all testimony and evidence which may be of aid in determining the cause of accident. He may exclude any testimony or exhibits which are not pertinent to the investigation or are merely cumulative.

§ 845.27 Proposed findings.

Any party may submit proposed findings to be drawn from the testimony and exhibits, a proposed probable cause, and proposed safety recommendations designed to prevent future accidents. The proposals shall be submitted within the time specified by the presiding officer at the close of the hearing, and shall be made a part of the public docket. Parties to the hearing shall serve copies of their proposals on all other parties to the hearing.

[48 FR 52740, Nov. 22, 1983]

§ 845.28 Stenographic transcript.

A verbatim report of the hearing shall be taken. Copies of the transcript may be obtained by any interested person from the Board or from the court reporting firm preparing the transcript upon payment of the fees fixed therefor. (See part 801, Appendix—Fee Schedule.)

§ 845.29 Payment of witnesses.

Any witness subpenaed to attend the hearing under this part shall be paid such fees for his travel and attendance as shall be certified by the hearing officer.

Subpart C—Board Reports

§ 845.40 Accident report.

(a) The Board will issue a detailed narrative accident report in connection with the investigation into those accidents which the Board determines to warrant such a report. The report will set forth the facts, conditions and circumstances relating to the accident and the probable cause thereof, along with any appropriate recommendations formulated on the basis of the investigation.

(b) The probable cause and facts, conditions, and circumstances of all other accidents will be reported in a manner and form prescribed by the Board.

§ 845.41 Petitions for reconsideration or modification.

(a) Petitions for reconsideration or modification of the Board's findings and determination of probable cause filed by a party to an investigation or hearing or other person having a direct interest in the accident investigation will be entertained only if based on the discovery of new evidence or on a showing that the Board's findings are erroneous. The petitions shall be in writing. Petitions which are repetitious of proposed findings submitted pursuant to § 845.27, or of positions previously advanced, and petitions filed by a party to the hearing who failed to submit proposed findings pursuant to § 845.27 will not be entertained. Petitions based on the discovery of new matter shall: identify the new matter; contain affidavits of prospective witnesses, authenticated documents, or both, or an explanation of why such substantiation is unavailable; and state why the new matter was not available prior to Board's adoption of its findings. Petitions based on a claim of erroneous findings shall set forth in detail the grounds relied upon.

(b) When a petition for reconsideration or modification is filed with the Board, copies of the petition and any supporting documentation shall be served on all other parties to the investigation or hearing and proof of service shall be attached to the petition. The other parties may file comments no later than 90 days after service of the petition.

(c) Oral presentation before the Board normally will not form a part of proceedings under this part. However, the Board may permit oral presentation where a party or interested person makes an affirmative showing that the written petition for reconsideration or modification is an insufficient means to present the party's or person's position to the Board. Where oral presentation is allowed, the Board will specify the issues to be addressed and all parties to the investigation or hearing will be given notice and the opportunity to participate.

[48 FR 52740, Nov. 22, 1983]

Subpart D—Public Record

§ 845.50 Public docket.

(a) The public docket shall include all factual information concerning the accident. Proposed findings submitted pursuant to § 831.12 or § 845.27 and petitions for reconsideration and modification submitted pursuant to § 845.41, comments thereon by other parties, and the Board's rulings, shall also be placed in the public docket.

(b) The docket shall be established as soon as practicable following the accident, and material shall be added thereto as it becomes available. Where a hearing is held, the exhibits will be introduced into the record at the hearing.

(c) A copy of the docket shall be made available to any person for review at the Washington office of the Board. Copies of the material in the docket may be obtained, upon payment of the cost of reproduction, from the Public Inquiries Section, Bureau of Administration, National Transportation Safety Board, Washington, DC 20594.

[44 FR 34419, June 14, 1979, as amended at 48 FR 52740, Nov. 22, 1983]

§ 845.51 Investigation to remain open.

Accident investigations are never officially closed but are kept open for the submission of new and pertinent evidence by any interested person. If the Board finds that such evidence is relevant and probative, it shall be made a

part of the docket and, where appropriate, parties will be given an opportunity to examine such evidence and to comment thereon.

PART 850—COAST GUARD—NATIONAL TRANSPORTATION SAFETY BOARD MARINE CASUALTY INVESTIGATIONS

Sec.
850.1 Purpose.
850.3 Relationship to Coast Guard marine investigation regulations and procedures.
850.5 Definitions.
850.10 Preliminary investigation by the Coast Guard.
850.15 Marine casualty investigation by the Board.
850.20 Cause or probable cause determinations from Board investigation.
850.25 Coast Guard marine casualty investigation for the Board.
850.30 Procedures for Coast Guard investigation.
850.35 Records of the Coast Guard and the Board.

AUTHORITY: Sec. 304(a)(1)(E), Independent Safety Board Act of 1974, Pub. L. 93–633, 88 Stat. 2168 (49 U.S.C. 1903).

SOURCE: 42 FR 61204, Dec. 1, 1977, unless otherwise noted.

§ 850.1 Purpose.

This part prescribes the joint regulations of the National Transportation Safety Board and the Coast Guard for the investigation of marine casualties.

[47 FR 46089, Oct. 15, 1982]

§ 850.3 Relationship to Coast Guard marine investigation regulations and procedures.

(a) The Coast Guard's responsibility to investigate marine casualties is not eliminated nor diminished by the regulations in this part.

(b) In those instances where the Board conducts an investigation in which the Coast Guard also has responsibility under R.S. 4450 (46 U.S.C. 239), the proceedings are conducted independently, but so as to avoid duplication as much as possible.

§ 850.5 Definitions.

As used in this part:

(a) *Act* means Title III of Pub. L. 93–633, the Independent Safety Board Act of 1974 (49 U.S.C. 1901, *et seq.*).

(b) *Board* means the National Transportation Safety Board.

(c) *Chairman* means the Chairman of the National Transportation Safety Board.

(d) *Commandant* means the Commandant of the Coast Guard.

(e) *Major marine casualty* means a casualty involving a vessel, other than a public vessel, that results in—

(1) The loss of six or more lives;

(2) The loss of a mechanically propelled vessel of 100 or more gross tons;

(3) Property damage initially estimated as $500,000 or more; or

(4) Serious threat, as determined by the Commandant and concurred in by the Chairman, to life, property, or the environment by hazardous materials.

(f) *Public vessel* means a vessel owned by the United States, except a vessel to which the Act of October 25, 1919, c. 82 (41 Stat. 305, 46 U.S.C. 363) applies.

(g) *Vessel of the United States* means a vessel—

(1) Documented, or required to be documented, under the laws of the United States;

(2) Owned in the United States; or

(3) Owned by a citizen or resident of the United States and not registered under a foreign flag.

§ 850.10 Preliminary investigation by the Coast Guard.

(a) The Coast Guard conducts the preliminary investigation of marine casualties.

(b) The Commandant determines from the preliminary investigation whether:

(1) The casualty is a major marine casualty; or

(2) The casualty involves a public and a nonpublic vessel and at least one fatality or $75,000 in property damage; or

(3) The casualty involves a Coast Guard and a nonpublic vessel and at least one fatality or $75,000 in property damage; or

(4) The casualty is a major marine casualty which involves significant safety issues relating to Coast Guard safety functions, e.g., search and rescue, aids to navigation, vessel traffic systems, commercial vessel safety, etc.

(c) The Commandant notifies the Board of a casualty described in paragraph (b) of this section.

[42 FR 61204, Dec. 1, 1977, as amended at 47 FR 46089, Oct. 15, 1982]

§ 850.15 Marine casualty investigation by the Board.

(a) The Board may conduct an investigation under the Act of any major marine casualty or any casualty involving public and nonpublic vessels. Where the Board determines it will convene a hearing in connection with such an investigation, the Board's rules of practice for transportation accident hearings in 49 CFR part 845 shall apply.

(b) The Board shall conduct an investigation under the Act when:

(1) The casualty involves a Coast Guard and a nonpublic vessel and at least one fatality or $75,000 in property damage; or

(2) The Commandant and the Board agree that the Board shall conduct the investigation, and the casualty involves a public and a nonpublic vessel and at least one fatality or $75,000 in property damage; or

(3) The Commandant and the Board agree that the Board shall conduct the investigation, and the casualty is a major marine casualty which involves significant safety issues relating to Coast Guard safety functions.

[47 FR 46090, Oct. 15, 1982]

§ 850.20 Cause or probable cause determinations from Board investigation.

After an investigation conducted by the Board under § 850.15, the Board determines cause or probable cause and issues a report of that determination.

§ 850.25 Coast Guard marine casualty investigation for the Board.

(a) If the Board does not conduct an investigation under § 850.15(a), (b)(2) or (3), the Coast Guard, at the request of the Board, may conduct an investigation under the Act unless there is an allegation of Federal Government misfeasance or nonfeasance.

(b) The Board will request the Coast Guard to conduct an investigation under paragraph (a) of this section within 48 hours of receiving notice under § 850.10(c).

(c) The Coast Guard will advise the Board within 24 hours of receipt of a request under paragraph (b) of this section whether the Coast Guard will conduct an investigation under the Act.

[47 FR 46090, Oct. 15, 1982]

§ 850.30 Procedures for Coast Guard investigation.

(a) The Coast Guard conducts an investigation under § 850.25 using the procedures in 46 CFR 4.01–1 through 4.23–1.

(b) The Board may designate a person or persons to participate in every phase of an investigation, including on-scene investigation, that is conducted under the provisions of § 850.25.

(c) Consistent with Coast Guard responsibility to direct the course of the investigation, the person or persons designated by the Board under paragraph (b) of this section may:

(1) Make recommendations about the scope of the investigation.

(2) Call and examine witnesses.

(3) Submit or request additional evidence.

(d) The Commandant provides a record of the proceedings to the Board of an investigation of a major marine casualty under paragraph (a) of this section.

(e) The Board, under the Act, makes its determination of the facts, conditions, and circumstances, and the cause or probable cause of a major marine casualty, using the record of the proceedings provided by the Commandant under paragraph (d) of this section and any additional evidence the Board may acquire under its own authority.

(f) An investigation by the Coast Guard under this section is both an investigation under the Act and under R.S. 4450 (46 U.S.C. 239).

§ 850.35 Records of the Coast Guard and the Board.

(a) Records of the Coast Guard made under § 850.30 are available to the public under 49 CFR part 7.

(b) Records of the Board made under §§ 850.20 and 850.30 are available to the public under 49 CFR part 801.

PARTS 851–999 [RESERVED]

FINDING AIDS

A list of CFR titles, subtitles, chapters, subchapters and parts and an alphabetical list of agencies publishing in the CFR are included in the CFR Index and Finding Aids volume to the Code of Federal Regulations which is published separately and revised annually.

Table of CFR Titles and Chapters
Alphabetical List of Agencies Appearing in the CFR
List of CFR Sections Affected

Table of CFR Titles and Chapters

(Revised as of October 1, 2010)

Title 1—General Provisions

I Administrative Committee of the Federal Register (Parts 1—49)
II Office of the Federal Register (Parts 50—299)
IV Miscellaneous Agencies (Parts 400—500)

Title 2—Grants and Agreements

SUBTITLE A—OFFICE OF MANAGEMENT AND BUDGET GUIDANCE FOR GRANTS AND AGREEMENTS

I Office of Management and Budget Governmentwide Guidance for Grants and Agreements (Parts 100—199)
II Office of Management and Budget Circulars and Guidance (200—299)

SUBTITLE B—FEDERAL AGENCY REGULATIONS FOR GRANTS AND AGREEMENTS

III Department of Health and Human Services (Parts 300— 399)
IV Department of Agriculture (Parts 400—499)
VI Department of State (Parts 600—699)
VIII Department of Veterans Affairs (Parts 800—899)
IX Department of Energy (Parts 900—999)
XI Department of Defense (Parts 1100—1199)
XII Department of Transportation (Parts 1200—1299)
XIII Department of Commerce (Parts 1300—1399)
XIV Department of the Interior (Parts 1400—1499)
XV Environmental Protection Agency (Parts 1500—1599)
XVIII National Aeronautics and Space Administration (Parts 1880—1899)
XX United States Nuclear Regulatory Commission (Parts 2000—2099)
XXII Corporation for National and Community Service (Parts 2200—2299)
XXIII Social Security Administration (Parts 2300—2399)
XXIV Housing and Urban Development (Parts 2400—2499)
XXV National Science Foundation (Parts 2500—2599)
XXVI National Archives and Records Administration (Parts 2600—2699)
XXVII Small Business Administration (Parts 2700—2799)
XXVIII Department of Justice (Parts 2800—2899)
XXX Department of Homeland Security (Parts 3000—3099)
XXXI Institute of Museum and Library Services (Parts 3100—3199)

Title 2—Grants and Agreements—Continued

Chap.	
XXXII	National Endowment for the Arts (Parts 3200—3299)
XXXIII	National Endowment for the Humanities (Parts 3300—3399)
XXXV	Export-Import Bank of the United States (Parts 3500—3599)
XXXVII	Peace Corps (Parts 3700—3799)
LVIII	Election Assistance Commission (Parts 5800—5899)

Title 3—The President

I	Executive Office of the President (Parts 100—199)

Title 4—Accounts

I	Government Accountability Office (Parts 1—99)
II	Recovery Accountability and Transparency Board (Parts 200—299)

Title 5—Administrative Personnel

I	Office of Personnel Management (Parts 1—1199)
II	Merit Systems Protection Board (Parts 1200—1299)
III	Office of Management and Budget (Parts 1300—1399)
V	The International Organizations Employees Loyalty Board (Parts 1500—1599)
VI	Federal Retirement Thrift Investment Board (Parts 1600—1699)
VIII	Office of Special Counsel (Parts 1800—1899)
IX	Appalachian Regional Commission (Parts 1900—1999)
XI	Armed Forces Retirement Home (Parts 2100—2199)
XIV	Federal Labor Relations Authority, General Counsel of the Federal Labor Relations Authority and Federal Service Impasses Panel (Parts 2400—2499)
XV	Office of Administration, Executive Office of the President (Parts 2500—2599)
XVI	Office of Government Ethics (Parts 2600—2699)
XXI	Department of the Treasury (Parts 3100—3199)
XXII	Federal Deposit Insurance Corporation (Parts 3200—3299)
XXIII	Department of Energy (Parts 3300—3399)
XXIV	Federal Energy Regulatory Commission (Parts 3400—3499)
XXV	Department of the Interior (Parts 3500—3599)
XXVI	Department of Defense (Parts 3600— 3699)
XXVIII	Department of Justice (Parts 3800—3899)
XXIX	Federal Communications Commission (Parts 3900—3999)
XXX	Farm Credit System Insurance Corporation (Parts 4000—4099)
XXXI	Farm Credit Administration (Parts 4100—4199)
XXXIII	Overseas Private Investment Corporation (Parts 4300—4399)
XXXIV	Securities and Exchange Commission (Parts 4400—4499)
XXXV	Office of Personnel Management (Parts 4500—4599)

Title 5—Administrative Personnel—Continued

Chap.	
XL	Interstate Commerce Commission (Parts 5000—5099)
XLI	Commodity Futures Trading Commission (Parts 5100—5199)
XLII	Department of Labor (Parts 5200—5299)
XLIII	National Science Foundation (Parts 5300—5399)
XLV	Department of Health and Human Services (Parts 5500—5599)
XLVI	Postal Rate Commission (Parts 5600—5699)
XLVII	Federal Trade Commission (Parts 5700—5799)
XLVIII	Nuclear Regulatory Commission (Parts 5800—5899)
L	Department of Transportation (Parts 6000—6099)
LII	Export-Import Bank of the United States (Parts 6200—6299)
LIII	Department of Education (Parts 6300—6399)
LIV	Environmental Protection Agency (Parts 6400—6499)
LV	National Endowment for the Arts (Parts 6500—6599)
LVI	National Endowment for the Humanities (Parts 6600—6699)
LVII	General Services Administration (Parts 6700—6799)
LVIII	Board of Governors of the Federal Reserve System (Parts 6800—6899)
LIX	National Aeronautics and Space Administration (Parts 6900—6999)
LX	United States Postal Service (Parts 7000—7099)
LXI	National Labor Relations Board (Parts 7100—7199)
LXII	Equal Employment Opportunity Commission (Parts 7200—7299)
LXIII	Inter-American Foundation (Parts 7300—7399)
LXIV	Merit Systems Protection Board (Parts 7400—7499)
LXV	Department of Housing and Urban Development (Parts 7500—7599)
LXVI	National Archives and Records Administration (Parts 7600—7699)
LXVII	Institute of Museum and Library Services (Parts 7700—7799)
LXVIII	Commission on Civil Rights (Parts 7800—7899)
LXIX	Tennessee Valley Authority (Parts 7900—7999)
LXXI	Consumer Product Safety Commission (Parts 8100—8199)
LXXII	Special Inspector General for Iraq Reconstruction (Parts 8200—8299)
LXXIII	Department of Agriculture (Parts 8300—8399)
LXXIV	Federal Mine Safety and Health Review Commission (Parts 8400—8499)
LXXVI	Federal Retirement Thrift Investment Board (Parts 8600—8699)
LXXVII	Office of Management and Budget (Parts 8700—8799)
LXXX	Federal Housing Finance Agency (Parts 8700—8799)
LXXXII	Special Inspector General for Iraq Reconstruction (Parts 9200—9299)
XCVII	Department of Homeland Security Human Resources Management System (Department of Homeland Security—Office of Personnel Management) (Parts 9700—9799)
XCIX	Department of Defense Human Resources Management and Labor Relations Systems (Department of Defense—Office of Personnel Management) (Parts 9900—9999)

Title 6—Domestic Security

Chap.

I Department of Homeland Security, Office of the Secretary (Parts 0—99)

Title 7—Agriculture

SUBTITLE A—OFFICE OF THE SECRETARY OF AGRICULTURE (PARTS 0—26)

SUBTITLE B—REGULATIONS OF THE DEPARTMENT OF AGRICULTURE

I Agricultural Marketing Service (Standards, Inspections, Marketing Practices), Department of Agriculture (Parts 27—209)

II Food and Nutrition Service, Department of Agriculture (Parts 210—299)

III Animal and Plant Health Inspection Service, Department of Agriculture (Parts 300—399)

IV Federal Crop Insurance Corporation, Department of Agriculture (Parts 400—499)

V Agricultural Research Service, Department of Agriculture (Parts 500—599)

VI Natural Resources Conservation Service, Department of Agriculture (Parts 600—699)

VII Farm Service Agency, Department of Agriculture (Parts 700—799)

VIII Grain Inspection, Packers and Stockyards Administration (Federal Grain Inspection Service), Department of Agriculture (Parts 800—899)

IX Agricultural Marketing Service (Marketing Agreements and Orders; Fruits, Vegetables, Nuts), Department of Agriculture (Parts 900—999)

X Agricultural Marketing Service (Marketing Agreements and Orders; Milk), Department of Agriculture (Parts 1000—1199)

XI Agricultural Marketing Service (Marketing Agreements and Orders; Miscellaneous Commodities), Department of Agriculture (Parts 1200—1299)

XIV Commodity Credit Corporation, Department of Agriculture (Parts 1400—1499)

XV Foreign Agricultural Service, Department of Agriculture (Parts 1500—1599)

XVI Rural Telephone Bank, Department of Agriculture (Parts 1600—1699)

XVII Rural Utilities Service, Department of Agriculture (Parts 1700—1799)

XVIII Rural Housing Service, Rural Business-Cooperative Service, Rural Utilities Service, and Farm Service Agency, Department of Agriculture (Parts 1800—2099)

XX Local Television Loan Guarantee Board (Parts 2200—2299)

XXVI Office of Inspector General, Department of Agriculture (Parts 2600—2699)

XXVII Office of Information Resources Management, Department of Agriculture (Parts 2700—2799)

Title 7—Agriculture—Continued

Chap.	
XXVIII	Office of Operations, Department of Agriculture (Parts 2800—2899)
XXIX	Office of Energy Policy and New Uses, Department of Agriculture (Parts 2900—2999)
XXX	Office of the Chief Financial Officer, Department of Agriculture (Parts 3000—3099)
XXXI	Office of Environmental Quality, Department of Agriculture (Parts 3100—3199)
XXXII	Office of Procurement and Property Management, Department of Agriculture (Parts 3200—3299)
XXXIII	Office of Transportation, Department of Agriculture (Parts 3300—3399)
XXXIV	National Institute of Food and Agriculture (Parts 3400—3499)
XXXV	Rural Housing Service, Department of Agriculture (Parts 3500—3599)
XXXVI	National Agricultural Statistics Service, Department of Agriculture (Parts 3600—3699)
XXXVII	Economic Research Service, Department of Agriculture (Parts 3700—3799)
XXXVIII	World Agricultural Outlook Board, Department of Agriculture (Parts 3800—3899)
XLI	[Reserved]
XLII	Rural Business-Cooperative Service and Rural Utilities Service, Department of Agriculture (Parts 4200—4299)
L	Rural Business-Cooperative Service, Rurual Housing Service, and Rural Utilities Service, Department of Agriculture (Parts 5000—5099)

Title 8—Aliens and Nationality

I	Department of Homeland Security (Immigration and Naturalization) (Parts 1—499)
V	Executive Office for Immigration Review, Department of Justice (Parts 1000—1399)

Title 9—Animals and Animal Products

I	Animal and Plant Health Inspection Service, Department of Agriculture (Parts 1—199)
II	Grain Inspection, Packers and Stockyards Administration (Packers and Stockyards Programs), Department of Agriculture (Parts 200—299)
III	Food Safety and Inspection Service, Department of Agriculture (Parts 300—599)

Title 10—Energy

I	Nuclear Regulatory Commission (Parts 0—199)
II	Department of Energy (Parts 200—699)
III	Department of Energy (Parts 700—999)

Title 10—Energy—Continued

Chap.

X Department of Energy (General Provisions) (Parts 1000—1099)

XIII Nuclear Waste Technical Review Board (Parts 1303—1399)

XVII Defense Nuclear Facilities Safety Board (Parts 1700—1799)

XVIII Northeast Interstate Low-Level Radioactive Waste Commission (Parts 1800—1899)

Title 11—Federal Elections

I Federal Election Commission (Parts 1—9099)

II Election Assistance Commission (Parts 9400—9499)

Title 12—Banks and Banking

I Comptroller of the Currency, Department of the Treasury (Parts 1—199)

II Federal Reserve System (Parts 200—299)

III Federal Deposit Insurance Corporation (Parts 300—399)

IV Export-Import Bank of the United States (Parts 400—499)

V Office of Thrift Supervision, Department of the Treasury (Parts 500—599)

VI Farm Credit Administration (Parts 600—699)

VII National Credit Union Administration (Parts 700—799)

VIII Federal Financing Bank (Parts 800—899)

IX Federal Housing Finance Board (Parts 900—999)

XI Federal Financial Institutions Examination Council (Parts 1100—1199)

XII Federal Housing Finance Agency (Parts 1200—1299)

XIV Farm Credit System Insurance Corporation (Parts 1400—1499)

XV Department of the Treasury (Parts 1500—1599)

XVII Office of Federal Housing Enterprise Oversight, Department of Housing and Urban Development (Parts 1700—1799)

XVIII Community Development Financial Institutions Fund, Department of the Treasury (Parts 1800—1899)

Title 13—Business Credit and Assistance

I Small Business Administration (Parts 1—199)

III Economic Development Administration, Department of Commerce (Parts 300—399)

IV Emergency Steel Guarantee Loan Board (Parts 400—499)

V Emergency Oil and Gas Guaranteed Loan Board (Parts 500—599)

Title 14—Aeronautics and Space

I Federal Aviation Administration, Department of Transportation (Parts 1—199)

II Office of the Secretary, Department of Transportation (Aviation Proceedings) (Parts 200—399)

Title 14—Aeronautics and Space—Continued

Chap.

III Commercial Space Transportation, Federal Aviation Administration, Department of Transportation (Parts 400—499)

V National Aeronautics and Space Administration (Parts 1200—1299)

VI Air Transportation System Stabilization (Parts 1300—1399)

Title 15—Commerce and Foreign Trade

SUBTITLE A—OFFICE OF THE SECRETARY OF COMMERCE (PARTS 0—29)

SUBTITLE B—REGULATIONS RELATING TO COMMERCE AND FOREIGN TRADE

I Bureau of the Census, Department of Commerce (Parts 30—199)

II National Institute of Standards and Technology, Department of Commerce (Parts 200—299)

III International Trade Administration, Department of Commerce (Parts 300—399)

IV Foreign-Trade Zones Board, Department of Commerce (Parts 400—499)

VII Bureau of Industry and Security, Department of Commerce (Parts 700—799)

VIII Bureau of Economic Analysis, Department of Commerce (Parts 800—899)

IX National Oceanic and Atmospheric Administration, Department of Commerce (Parts 900—999)

XI Technology Administration, Department of Commerce (Parts 1100—1199)

XIII East-West Foreign Trade Board (Parts 1300—1399)

XIV Minority Business Development Agency (Parts 1400—1499)

SUBTITLE C—REGULATIONS RELATING TO FOREIGN TRADE AGREEMENTS

XX Office of the United States Trade Representative (Parts 2000—2099)

SUBTITLE D—REGULATIONS RELATING TO TELECOMMUNICATIONS AND INFORMATION

XXIII National Telecommunications and Information Administration, Department of Commerce (Parts 2300—2399)

Title 16—Commercial Practices

I Federal Trade Commission (Parts 0—999)

II Consumer Product Safety Commission (Parts 1000—1799)

Title 17—Commodity and Securities Exchanges

I Commodity Futures Trading Commission (Parts 1—199)

II Securities and Exchange Commission (Parts 200—399)

IV Department of the Treasury (Parts 400—499)

Title 18—Conservation of Power and Water Resources

Chap.

I Federal Energy Regulatory Commission, Department of Energy (Parts 1—399)

III Delaware River Basin Commission (Parts 400—499)

VI Water Resources Council (Parts 700—799)

VIII Susquehanna River Basin Commission (Parts 800—899)

XIII Tennessee Valley Authority (Parts 1300—1399)

Title 19—Customs Duties

I U.S. Customs and Border Protection, Department of Homeland Security; Department of the Treasury (Parts 0—199)

II United States International Trade Commission (Parts 200—299)

III International Trade Administration, Department of Commerce (Parts 300—399)

IV U.S. Immigration and Customs Enforcement, Department of Homeland Security (Parts 400—599)

Title 20—Employees' Benefits

I Office of Workers' Compensation Programs, Department of Labor (Parts 1—199)

II Railroad Retirement Board (Parts 200—399)

III Social Security Administration (Parts 400—499)

IV Employees Compensation Appeals Board, Department of Labor (Parts 500—599)

V Employment and Training Administration, Department of Labor (Parts 600—699)

VI Employment Standards Administration, Department of Labor (Parts 700—799)

VII Benefits Review Board, Department of Labor (Parts 800—899)

VIII Joint Board for the Enrollment of Actuaries (Parts 900—999)

IX Office of the Assistant Secretary for Veterans' Employment and Training Service, Department of Labor (Parts 1000—1099)

Title 21—Food and Drugs

I Food and Drug Administration, Department of Health and Human Services (Parts 1—1299)

II Drug Enforcement Administration, Department of Justice (Parts 1300—1399)

III Office of National Drug Control Policy (Parts 1400—1499)

Title 22—Foreign Relations

I Department of State (Parts 1—199)

II Agency for International Development (Parts 200—299)

III Peace Corps (Parts 300—399)

Title 22—Foreign Relations—Continued

Chap.

IV International Joint Commission, United States and Canada (Parts 400—499)

V Broadcasting Board of Governors (Parts 500—599)

VII Overseas Private Investment Corporation (Parts 700—799)

IX Foreign Service Grievance Board (Parts 900—999)

X Inter-American Foundation (Parts 1000—1099)

XI International Boundary and Water Commission, United States and Mexico, United States Section (Parts 1100—1199)

XII United States International Development Cooperation Agency (Parts 1200—1299)

XIII Millenium Challenge Corporation (Parts 1300—1399)

XIV Foreign Service Labor Relations Board; Federal Labor Relations Authority; General Counsel of the Federal Labor Relations Authority; and the Foreign Service Impasse Disputes Panel (Parts 1400—1499)

XV African Development Foundation (Parts 1500—1599)

XVI Japan-United States Friendship Commission (Parts 1600—1699)

XVII United States Institute of Peace (Parts 1700—1799)

Title 23—Highways

I Federal Highway Administration, Department of Transportation (Parts 1—999)

II National Highway Traffic Safety Administration and Federal Highway Administration, Department of Transportation (Parts 1200—1299)

III National Highway Traffic Safety Administration, Department of Transportation (Parts 1300—1399)

Title 24—Housing and Urban Development

SUBTITLE A—OFFICE OF THE SECRETARY, DEPARTMENT OF HOUSING AND URBAN DEVELOPMENT (PARTS 0—99)

SUBTITLE B—REGULATIONS RELATING TO HOUSING AND URBAN DEVELOPMENT

I Office of Assistant Secretary for Equal Opportunity, Department of Housing and Urban Development (Parts 100—199)

II Office of Assistant Secretary for Housing-Federal HousingCommissioner, Department of Housing and Urban Development (Parts 200—299)

III Government National Mortgage Association, Department of Housing and Urban Development (Parts 300—399)

IV Office of Housing and Office of Multifamily Housing Assistance Restructuring, Department of Housing and Urban Development (Parts 400—499)

V Office of Assistant Secretary for Community Planning and Development, Department of Housing and Urban Development (Parts 500—599)

Title 24—Housing and Urban Development—Continued

Chap.

VI Office of Assistant Secretary for Community Planning and Development, Department of Housing and Urban Development (Parts 600—699) [Reserved]

VII Office of the Secretary, Department of Housing and Urban Development (Housing Assistance Programs and Public and Indian Housing Programs) (Parts 700—799)

VIII Office of the Assistant Secretary for Housing—Federal Housing Commissioner, Department of Housing and Urban Development (Section 8 Housing Assistance Programs, Section 202 Direct Loan Program, Section 202 Supportive Housing for the Elderly Program and Section 811 Supportive Housing for Persons With Disabilities Program) (Parts 800—899)

IX Office of Assistant Secretary for Public and Indian Housing, Department of Housing and Urban Development (Parts 900—1699)

X Office of Assistant Secretary for Housing—Federal Housing Commissioner, Department of Housing and Urban Development (Interstate Land Sales Registration Program) (Parts 1700—1799)

XII Office of Inspector General, Department of Housing and Urban Development (Parts 2000—2099)

XX Office of Assistant Secretary for Housing—Federal Housing Commissioner, Department of Housing and Urban Development (Parts 3200—3899)

XXIV Board of Directors of the HOPE for Homeowners Program (Parts 4000—4099)

XXV Neighborhood Reinvestment Corporation (Parts 4100—4199)

Title 25—Indians

I Bureau of Indian Affairs, Department of the Interior (Parts 1—299)

II Indian Arts and Crafts Board, Department of the Interior (Parts 300—399)

III National Indian Gaming Commission, Department of the Interior (Parts 500—599)

IV Office of Navajo and Hopi Indian Relocation (Parts 700—799)

V Bureau of Indian Affairs, Department of the Interior, and Indian Health Service, Department of Health and Human Services (Part 900)

VI Office of the Assistant Secretary-Indian Affairs, Department of the Interior (Parts 1000—1199)

VII Office of the Special Trustee for American Indians, Department of the Interior (Parts 1200—1299)

Title 26—Internal Revenue

I Internal Revenue Service, Department of the Treasury (Parts 1—899)

Title 27—Alcohol, Tobacco Products and Firearms

Chap.

I Alcohol and Tobacco Tax and Trade Bureau, Department of the Treasury (Parts 1—399)

II Bureau of Alcohol, Tobacco, Firearms, and Explosives, Department of Justice (Parts 400—699)

Title 28—Judicial Administration

I Department of Justice (Parts 0—299)

III Federal Prison Industries, Inc., Department of Justice (Parts 300—399)

V Bureau of Prisons, Department of Justice (Parts 500—599)

VI Offices of Independent Counsel, Department of Justice (Parts 600—699)

VII Office of Independent Counsel (Parts 700—799)

VIII Court Services and Offender Supervision Agency for the District of Columbia (Parts 800—899)

IX National Crime Prevention and Privacy Compact Council (Parts 900—999)

XI Department of Justice and Department of State (Parts 1100—1199)

Title 29—Labor

SUBTITLE A—OFFICE OF THE SECRETARY OF LABOR (PARTS 0—99)

SUBTITLE B—REGULATIONS RELATING TO LABOR

I National Labor Relations Board (Parts 100—199)

II Office of Labor-Management Standards, Department of Labor (Parts 200—299)

III National Railroad Adjustment Board (Parts 300—399)

IV Office of Labor-Management Standards, Department of Labor (Parts 400—499)

V Wage and Hour Division, Department of Labor (Parts 500—899)

IX Construction Industry Collective Bargaining Commission (Parts 900—999)

X National Mediation Board (Parts 1200—1299)

XII Federal Mediation and Conciliation Service (Parts 1400—1499)

XIV Equal Employment Opportunity Commission (Parts 1600—1699)

XVII Occupational Safety and Health Administration, Department of Labor (Parts 1900—1999)

XX Occupational Safety and Health Review Commission (Parts 2200—2499)

XXV Employee Benefits Security Administration, Department of Labor (Parts 2500—2599)

XXVII Federal Mine Safety and Health Review Commission (Parts 2700—2799)

XL Pension Benefit Guaranty Corporation (Parts 4000—4999)

Title 30—Mineral Resources

Chap.

I Mine Safety and Health Administration, Department of Labor (Parts 1—199)

II Minerals Management Service, Department of the Interior (Parts 200—299)

III Board of Surface Mining and Reclamation Appeals, Department of the Interior (Parts 300—399)

IV Geological Survey, Department of the Interior (Parts 400—499)

VII Office of Surface Mining Reclamation and Enforcement, Department of the Interior (Parts 700—999)

Title 31—Money and Finance: Treasury

SUBTITLE A—OFFICE OF THE SECRETARY OF THE TREASURY (PARTS 0—50)

SUBTITLE B—REGULATIONS RELATING TO MONEY AND FINANCE

I Monetary Offices, Department of the Treasury (Parts 51—199)

II Fiscal Service, Department of the Treasury (Parts 200—399)

IV Secret Service, Department of the Treasury (Parts 400—499)

V Office of Foreign Assets Control, Department of the Treasury (Parts 500—599)

VI Bureau of Engraving and Printing, Department of the Treasury (Parts 600—699)

VII Federal Law Enforcement Training Center, Department of the Treasury (Parts 700—799)

VIII Office of International Investment, Department of the Treasury (Parts 800—899)

IX Federal Claims Collection Standards (Department of the Treasury—Department of Justice) (Parts 900—999)

Title 32—National Defense

SUBTITLE A—DEPARTMENT OF DEFENSE

I Office of the Secretary of Defense (Parts 1—399)

V Department of the Army (Parts 400—699)

VI Department of the Navy (Parts 700—799)

VII Department of the Air Force (Parts 800—1099)

SUBTITLE B—OTHER REGULATIONS RELATING TO NATIONAL DEFENSE

XII Defense Logistics Agency (Parts 1200—1299)

XVI Selective Service System (Parts 1600—1699)

XVII Office of the Director of National Intelligence (Parts 1700—1799)

XVIII National Counterintelligence Center (Parts 1800—1899)

XIX Central Intelligence Agency (Parts 1900—1999)

XX Information Security Oversight Office, National Archives and Records Administration (Parts 2000—2099)

XXI National Security Council (Parts 2100—2199)

XXIV Office of Science and Technology Policy (Parts 2400—2499)

XXVII Office for Micronesian Status Negotiations (Parts 2700—2799)

Title 32—National Defense—Continued

Chap.

XXVIII Office of the Vice President of the United States (Parts 2800—2899)

Title 33—Navigation and Navigable Waters

I Coast Guard, Department of Homeland Security (Parts 1—199)

II Corps of Engineers, Department of the Army (Parts 200—399)

IV Saint Lawrence Seaway Development Corporation, Department of Transportation (Parts 400—499)

Title 34—Education

SUBTITLE A—OFFICE OF THE SECRETARY, DEPARTMENT OF EDUCATION (PARTS 1—99)

SUBTITLE B—REGULATIONS OF THE OFFICES OF THE DEPARTMENT OF EDUCATION

I Office for Civil Rights, Department of Education (Parts 100—199)

II Office of Elementary and Secondary Education, Department of Education (Parts 200—299)

III Office of Special Education and Rehabilitative Services, Department of Education (Parts 300—399)

IV Office of Vocational and Adult Education, Department of Education (Parts 400—499)

V Office of Bilingual Education and Minority Languages Affairs, Department of Education (Parts 500—599)

VI Office of Postsecondary Education, Department of Education (Parts 600—699)

VII Office of Educational Research and Improvmeent, Department of Education [Reserved]

XI National Institute for Literacy (Parts 1100—1199)

SUBTITLE C—REGULATIONS RELATING TO EDUCATION

XII National Council on Disability (Parts 1200—1299)

Title 35 [Reserved]

Title 36—Parks, Forests, and Public Property

I National Park Service, Department of the Interior (Parts 1—199)

II Forest Service, Department of Agriculture (Parts 200—299)

III Corps of Engineers, Department of the Army (Parts 300—399)

IV American Battle Monuments Commission (Parts 400—499)

V Smithsonian Institution (Parts 500—599)

VI [Reserved]

VII Library of Congress (Parts 700—799)

VIII Advisory Council on Historic Preservation (Parts 800—899)

IX Pennsylvania Avenue Development Corporation (Parts 900—999)

X Presidio Trust (Parts 1000—1099)

Title 36—Parks, Forests, and Public Property—Continued

Chap.

XI Architectural and Transportation Barriers Compliance Board (Parts 1100—1199)

XII National Archives and Records Administration (Parts 1200—1299)

XV Oklahoma City National Memorial Trust (Parts 1500—1599)

XVI Morris K. Udall Scholarship and Excellence in National Environmental Policy Foundation (Parts 1600—1699)

Title 37—Patents, Trademarks, and Copyrights

I United States Patent and Trademark Office, Department of Commerce (Parts 1—199)

II Copyright Office, Library of Congress (Parts 200—299)

III Copyright Royalty Board, Library of Congress (Parts 301—399)

IV Assistant Secretary for Technology Policy, Department of Commerce (Parts 400—499)

V Under Secretary for Technology, Department of Commerce (Parts 500—599)

Title 38—Pensions, Bonuses, and Veterans' Relief

I Department of Veterans Affairs (Parts 0—99)

II Armed Forces Retirement Home

Title 39—Postal Service

I United States Postal Service (Parts 1—999)

III Postal Regulatory Commission (Parts 3000—3099)

Title 40—Protection of Environment

I Environmental Protection Agency (Parts 1—1099)

IV Environmental Protection Agency and Department of Justice (Parts 1400—1499)

V Council on Environmental Quality (Parts 1500—1599)

VI Chemical Safety and Hazard Investigation Board (Parts 1600—1699)

VII Environmental Protection Agency and Department of Defense; Uniform National Discharge Standards for Vessels of the Armed Forces (Parts 1700—1799)

Title 41—Public Contracts and Property Management

SUBTITLE B—OTHER PROVISIONS RELATING TO PUBLIC CONTRACTS

50 Public Contracts, Department of Labor (Parts 50–1—50–999)

51 Committee for Purchase From People Who Are Blind or Severely Disabled (Parts 51–1—51–99)

60 Office of Federal Contract Compliance Programs, Equal Employment Opportunity, Department of Labor (Parts 60–1—60–999)

Title 41—Public Contracts and Property Management—Continued

Chap.

61 Office of the Assistant Secretary for Veterans' Employment and Training Service, Department of Labor (Parts 61–1—61–999)

Chapters 62—100 [Reserved]

SUBTITLE C—FEDERAL PROPERTY MANAGEMENT REGULATIONS SYSTEM

101 Federal Property Management Regulations (Parts 101–1—101–99)

102 Federal Management Regulation (Parts 102–1—102–299)

Chapters 103—104 [Reserved]

105 General Services Administration (Parts 105–1—105–999)

109 Department of Energy Property Management Regulations (Parts 109–1—109–99)

114 Department of the Interior (Parts 114–1—114–99)

115 Environmental Protection Agency (Parts 115–1—115–99)

128 Department of Justice (Parts 128–1—128–99)

Chapters 129—200 [Reserved]

SUBTITLE D—OTHER PROVISIONS RELATING TO PROPERTY MANAGEMENT [RESERVED]

SUBTITLE E—FEDERAL INFORMATION RESOURCES MANAGEMENT REGULATIONS SYSTEM [RESERVED]

SUBTITLE F—FEDERAL TRAVEL REGULATION SYSTEM

300 General (Parts 300–1—300–99)

301 Temporary Duty (TDY) Travel Allowances (Parts 301–1—301–99)

302 Relocation Allowances (Parts 302–1—302–99)

303 Payment of Expenses Connected with the Death of Certain Employees (Part 303–1—303–99)

304 Payment of Travel Expenses from a Non-Federal Source (Parts 304–1—304–99)

Title 42—Public Health

I Public Health Service, Department of Health and Human Services (Parts 1—199)

IV Centers for Medicare & Medicaid Services, Department of Health and Human Services (Parts 400—499)

V Office of Inspector General-Health Care, Department of Health and Human Services (Parts 1000—1999)

Title 43—Public Lands: Interior

SUBTITLE A—OFFICE OF THE SECRETARY OF THE INTERIOR (PARTS 1—199)

SUBTITLE B—REGULATIONS RELATING TO PUBLIC LANDS

I Bureau of Reclamation, Department of the Interior (Parts 200—499)

II Bureau of Land Management, Department of the Interior (Parts 1000—9999)

Title 43—Public Lands: Interior—Continued

Chap.

III Utah Reclamation Mitigation and Conservation Commission (Parts 10000—10010)

Title 44—Emergency Management and Assistance

I Federal Emergency Management Agency, Department of Homeland Security (Parts 0—399)

IV Department of Commerce and Department of Transportation (Parts 400—499)

Title 45—Public Welfare

SUBTITLE A—DEPARTMENT OF HEALTH AND HUMAN SERVICES (PARTS 1—199)

SUBTITLE B—REGULATIONS RELATING TO PUBLIC WELFARE

II Office of Family Assistance (Assistance Programs), Administration for Children and Families, Department of Health and Human Services (Parts 200—299)

III Office of Child Support Enforcement (Child Support Enforcement Program), Administration for Children and Families, Department of Health and Human Services (Parts 300—399)

IV Office of Refugee Resettlement, Administration for Children and Families, Department of Health and Human Services (Parts 400—499)

V Foreign Claims Settlement Commission of the United States, Department of Justice (Parts 500—599)

VI National Science Foundation (Parts 600—699)

VII Commission on Civil Rights (Parts 700—799)

VIII Office of Personnel Management (Parts 800—899) [Reserved]

X Office of Community Services, Administration for Children and Families, Department of Health and Human Services (Parts 1000—1099)

XI National Foundation on the Arts and the Humanities (Parts 1100—1199)

XII Corporation for National and Community Service (Parts 1200—1299)

XIII Office of Human Development Services, Department of Health and Human Services (Parts 1300—1399)

XVI Legal Services Corporation (Parts 1600—1699)

XVII National Commission on Libraries and Information Science (Parts 1700—1799)

XVIII Harry S. Truman Scholarship Foundation (Parts 1800—1899)

XXI Commission on Fine Arts (Parts 2100—2199)

XXIII Arctic Research Commission (Part 2301)

XXIV James Madison Memorial Fellowship Foundation (Parts 2400—2499)

XXV Corporation for National and Community Service (Parts 2500—2599)

Title 46—Shipping

Chap.

I Coast Guard, Department of Homeland Security (Parts 1—199)

II Maritime Administration, Department of Transportation (Parts 200—399)

III Coast Guard (Great Lakes Pilotage), Department of Homeland Security (Parts 400—499)

IV Federal Maritime Commission (Parts 500—599)

Title 47—Telecommunication

I Federal Communications Commission (Parts 0—199)

II Office of Science and Technology Policy and National Security Council (Parts 200—299)

III National Telecommunications and Information Administration, Department of Commerce (Parts 300—399)

IV National Telecommunications and Information Administration, Department of Commerce, and National Highway Traffic Safety Administration, Department of Transportation (Parts 400—499)

Title 48—Federal Acquisition Regulations System

1 Federal Acquisition Regulation (Parts 1—99)

2 Defense Acquisition Regulations System, Department of Defense (Parts 200—299)

3 Health and Human Services (Parts 300—399)

4 Department of Agriculture (Parts 400—499)

5 General Services Administration (Parts 500—599)

6 Department of State (Parts 600—699)

7 Agency for International Development (Parts 700—799)

8 Department of Veterans Affairs (Parts 800—899)

9 Department of Energy (Parts 900—999)

10 Department of the Treasury (Parts 1000—1099)

12 Department of Transportation (Parts 1200—1299)

13 Department of Commerce (Parts 1300—1399)

14 Department of the Interior (Parts 1400—1499)

15 Environmental Protection Agency (Parts 1500—1599)

16 Office of Personnel Management, Federal Employees Health Benefits Acquisition Regulation (Parts 1600—1699)

17 Office of Personnel Management (Parts 1700—1799)

18 National Aeronautics and Space Administration (Parts 1800—1899)

19 Broadcasting Board of Governors (Parts 1900—1999)

20 Nuclear Regulatory Commission (Parts 2000—2099)

21 Office of Personnel Management, Federal Employees Group Life Insurance Federal Acquisition Regulation (Parts 2100—2199)

23 Social Security Administration (Parts 2300—2399)

24 Department of Housing and Urban Development (Parts 2400—2499)

Chap.

25 National Science Foundation (Parts 2500—2599)

28 Department of Justice (Parts 2800—2899)

29 Department of Labor (Parts 2900—2999)

30 Department of Homeland Security, Homeland Security Acquisition Regulation (HSAR) (Parts 3000—3099)

34 Department of Education Acquisition Regulation (Parts 3400—3499)

51 Department of the Army Acquisition Regulations (Parts 5100—5199)

52 Department of the Navy Acquisition Regulations (Parts 5200—5299)

53 Department of the Air Force Federal Acquisition Regulation Supplement [Reserved]

54 Defense Logistics Agency, Department of Defense (Parts 5400—5499)

57 African Development Foundation (Parts 5700—5799)

61 Civilian Board of Contract Appeals, General Services Administration (Parts 6100—6199)

63 Department of Transportation Board of Contract Appeals (Parts 6300—6399)

99 Cost Accounting Standards Board, Office of Federal Procurement Policy, Office of Management and Budget (Parts 9900—9999)

Title 49—Transportation

SUBTITLE A—OFFICE OF THE SECRETARY OF TRANSPORTATION (PARTS 1—99)

SUBTITLE B—OTHER REGULATIONS RELATING TO TRANSPORTATION

I Pipeline and Hazardous Materials Safety Administration, Department of Transportation (Parts 100—199)

II Federal Railroad Administration, Department of Transportation (Parts 200—299)

III Federal Motor Carrier Safety Administration, Department of Transportation (Parts 300—399)

IV Coast Guard, Department of Homeland Security (Parts 400—499)

V National Highway Traffic Safety Administration, Department of Transportation (Parts 500—599)

VI Federal Transit Administration, Department of Transportation (Parts 600—699)

VII National Railroad Passenger Corporation (AMTRAK) (Parts 700—799)

VIII National Transportation Safety Board (Parts 800—999)

X Surface Transportation Board, Department of Transportation (Parts 1000—1399)

XI Research and Innovative Technology Administration, Department of Transportation [Reserved]

XII Transportation Security Administration, Department of Homeland Security (Parts 1500—1699)

Title 50—Wildlife and Fisheries

Chap.

I United States Fish and Wildlife Service, Department of the Interior (Parts 1—199)

II National Marine Fisheries Service, National Oceanic and Atmospheric Administration, Department of Commerce (Parts 200—299)

III International Fishing and Related Activities (Parts 300—399)

IV Joint Regulations (United States Fish and Wildlife Service, Department of the Interior and National Marine Fisheries Service, National Oceanic and Atmospheric Administration, Department of Commerce); Endangered Species Committee Regulations (Parts 400—499)

V Marine Mammal Commission (Parts 500—599)

VI Fishery Conservation and Management, National Oceanic and Atmospheric Administration, Department of Commerce (Parts 600—699)

CFR Index and Finding Aids

Subject/Agency Index

List of Agency Prepared Indexes

Parallel Tables of Statutory Authorities and Rules

List of CFR Titles, Chapters, Subchapters, and Parts

Alphabetical List of Agencies Appearing in the CFR

Alphabetical List of Agencies Appearing in the CFR

(Revised as of October 1, 2010)

Agency	CFR Title, Subtitle or Chapter
Administrative Committee of the Federal Register	1, I
Advanced Research Projects Agency	32, I
Advisory Council on Historic Preservation	36, VIII
African Development Foundation	22, XV
Federal Acquisition Regulation	48, 57
Agency for International Development	22, II
Federal Acquisition Regulation	48, 7
Agricultural Marketing Service	7, I, IX, X, XI
Agricultural Research Service	7, V
Agriculture Department	2, IV; 5, LXXIII
Agricultural Marketing Service	7, I, IX, X, XI
Agricultural Research Service	7, V
Animal and Plant Health Inspection Service	7, III; 9, I
Chief Financial Officer, Office of	7, XXX
Commodity Credit Corporation	7, XIV
Economic Research Service	7, XXXVII
Energy Policy and New Uses, Office of	2, IX; 7, XXIX
Environmental Quality, Office of	7, XXXI
Farm Service Agency	7, VII, XVIII
Federal Acquisition Regulation	48, 4
Federal Crop Insurance Corporation	7, IV
Food and Nutrition Service	7, II
Food Safety and Inspection Service	9, III
Foreign Agricultural Service	7, XV
Forest Service	36, II
Grain Inspection, Packers and Stockyards Administration	7, VIII; 9, II
Information Resources Management, Office of	7, XXVII
Inspector General, Office of	7, XXVI
National Agricultural Library	7, XLI
National Agricultural Statistics Service	7, XXXVI
National Institute of Food and Agriculture.	7, XXXIV
Natural Resources Conservation Service	7, VI
Operations, Office of	7, XXVIII
Procurement and Property Management, Office of	7, XXXII
Rural Business-Cooperative Service	7, XVIII, XLII, L
Rural Development Administration	7, XLII
Rural Housing Service	7, XVIII, XXXV, L
Rural Telephone Bank	7, XVI
Rural Utilities Service	7, XVII, XVIII, XLII, L
Secretary of Agriculture, Office of	7, Subtitle A
Transportation, Office of	7, XXXIII
World Agricultural Outlook Board	7, XXXVIII
Air Force Department	32, VII
Federal Acquisition Regulation Supplement	48, 53
Air Transportation Stabilization Board	14, VI
Alcohol and Tobacco Tax and Trade Bureau	27, I
Alcohol, Tobacco, Firearms, and Explosives, Bureau of	27, II
AMTRAK	49, VII
American Battle Monuments Commission	36, IV
American Indians, Office of the Special Trustee	25, VII
Animal and Plant Health Inspection Service	7, III; 9, I
Appalachian Regional Commission	5, IX
Architectural and Transportation Barriers Compliance Board	36, XI

Agency	CFR Title, Subtitle or Chapter
Arctic Research Commission	45, XXIII
Armed Forces Retirement Home	5, XI
Army Department	32, V
Engineers, Corps of	33, II; 36, III
Federal Acquisition Regulation	48, 51
Benefits Review Board	20, VII
Bilingual Education and Minority Languages Affairs, Office of	34, V
Blind or Severely Disabled, Committee for Purchase From People Who Are	41, 51
Broadcasting Board of Governors	22, V
Federal Acquisition Regulation	48, 19
Census Bureau	15, I
Centers for Medicare & Medicaid Services	42, IV
Central Intelligence Agency	32, XIX
Chief Financial Officer, Office of	7, XXX
Child Support Enforcement, Office of	45, III
Children and Families, Administration for	45, II, III, IV, X
Civil Rights, Commission on	5, LXVIII; 45, VII
Civil Rights, Office for	34, I
Coast Guard	33, I; 46, I; 49, IV
Coast Guard (Great Lakes Pilotage)	46, III
Commerce Department	44, IV
Census Bureau	15, I
Economic Affairs, Under Secretary	37, V
Economic Analysis, Bureau of	15, VIII
Economic Development Administration	13, III
Emergency Management and Assistance	44, IV
Federal Acquisition Regulation	48, 13
Fishery Conservation and Management	50, VI
Foreign-Trade Zones Board	15, IV
Industry and Security, Bureau of	15, VII
International Trade Administration	15, III; 19, III
National Institute of Standards and Technology	15, II
National Marine Fisheries Service	50, II, IV, VI
National Oceanic and Atmospheric Administration	15, IX; 50, II, III, IV, VI
National Telecommunications and Information Administration	15, XXIII; 47, III, IV
National Weather Service	15, IX
Patent and Trademark Office, United States	37, I
Productivity, Technology and Innovation, Assistant Secretary for	37, IV
Secretary of Commerce, Office of	15, Subtitle A
Technology, Under Secretary for	37, V
Technology Administration	15, XI
Technology Policy, Assistant Secretary for	37, IV
Commercial Space Transportation	14, III
Commodity Credit Corporation	7, XIV
Commodity Futures Trading Commission	5, XLI; 17, I
Community Planning and Development, Office of Assistant Secretary for	24, V, VI
Community Services, Office of	45, X
Comptroller of the Currency	12, I
Construction Industry Collective Bargaining Commission	29, IX
Consumer Product Safety Commission	5, LXXI; 16, II
Copyright Office	37, II
Copyright Royalty Board	37, III
Corporation for National and Community Service	2, XXII; 45, XII, XXV
Cost Accounting Standards Board	48, 99
Council on Environmental Quality	40, V
Court Services and Offender Supervision Agency for the District of Columbia	28, VIII
Customs and Border Protection Bureau	19, I
Defense Contract Audit Agency	32, I
Defense Department	5, XXVI; 32, Subtitle A; 40, VII
Advanced Research Projects Agency	32, I
Air Force Department	32, VII

Agency	CFR Title, Subtitle or Chapter
Army Department	32, V; 33, II; 36, III, 48, 51
Defense Acquisition Regulations System	48, 2
Defense Intelligence Agency	32, I
Defense Logistics Agency	32, I, XII; 48, 54
Engineers, Corps of	33, II; 36, III
Human Resources Management and Labor Relations Systems	5, XCIX
National Imagery and Mapping Agency	32, I
Navy Department	32, VI; 48, 52
Secretary of Defense, Office of	2, XI; 32, I
Defense Contract Audit Agency	32, I
Defense Intelligence Agency	32, I
Defense Logistics Agency	32, XII; 48, 54
Defense Nuclear Facilities Safety Board	10, XVII
Delaware River Basin Commission	18, III
District of Columbia, Court Services and Offender Supervision Agency for the	28, VIII
Drug Enforcement Administration	21, II
East-West Foreign Trade Board	15, XIII
Economic Affairs, Under Secretary	37, V
Economic Analysis, Bureau of	15, VIII
Economic Development Administration	13, III
Economic Research Service	7, XXXVII
Education, Department of	5, LIII
Bilingual Education and Minority Languages Affairs, Office of	34, V
Civil Rights, Office for	34, I
Educational Research and Improvement, Office of	34, VII
Elementary and Secondary Education, Office of	34, II
Federal Acquisition Regulation	48, 34
Postsecondary Education, Office of	34, VI
Secretary of Education, Office of	34, Subtitle A
Special Education and Rehabilitative Services, Office of	34, III
Vocational and Adult Education, Office of	34, IV
Educational Research and Improvement, Office of	34, VII
Election Assistance Commission	2, LVIII; 11, II
Elementary and Secondary Education, Office of	34, II
Emergency Oil and Gas Guaranteed Loan Board	13, V
Emergency Steel Guarantee Loan Board	13, IV
Employee Benefits Security Administration	29, XXV
Employees' Compensation Appeals Board	20, IV
Employees Loyalty Board	5, V
Employment and Training Administration	20, V
Employment Standards Administration	20, VI
Endangered Species Committee	50, IV
Energy, Department of	5, XXIII; 10, II, III, X
Federal Acquisition Regulation	48, 9
Federal Energy Regulatory Commission	5, XXIV; 18, I
Property Management Regulations	41, 109
Energy, Office of	7, XXIX
Engineers, Corps of	33, II; 36, III
Engraving and Printing, Bureau of	31, VI
Environmental Protection Agency	2, XV; 5, LIV; 40, I, IV, VII
Federal Acquisition Regulation	48, 15
Property Management Regulations	41, 115
Environmental Quality, Office of	7, XXXI
Equal Employment Opportunity Commission	5, LXII; 29, XIV
Equal Opportunity, Office of Assistant Secretary for	24, I
Executive Office of the President	3, I
Administration, Office of	5, XV
Environmental Quality, Council on	40, V
Management and Budget, Office of	5, III, LXXVII; 14, VI; 48, 99
National Drug Control Policy, Office of	21, III
National Security Council	32, XXI; 47, 2

Agency	CFR Title, Subtitle or Chapter
Presidential Documents	3
Science and Technology Policy, Office of	32, XXIV; 47, II
Trade Representative, Office of the United States	15, XX
Export-Import Bank of the United States	2, XXXV; 5, LII; 12, IV
Family Assistance, Office of	45, II
Farm Credit Administration	5, XXXI; 12, VI
Farm Credit System Insurance Corporation	5, XXX; 12, XIV
Farm Service Agency	7, VII, XVIII
Federal Acquisition Regulation	48, 1
Federal Aviation Administration	14, I
Commercial Space Transportation	14, III
Federal Claims Collection Standards	31, IX
Federal Communications Commission	5, XXIX; 47, I
Federal Contract Compliance Programs, Office of	41, 60
Federal Crop Insurance Corporation	7, IV
Federal Deposit Insurance Corporation	5, XXII; 12, III
Federal Election Commission	11, I
Federal Emergency Management Agency	44, I
Federal Employees Group Life Insurance Federal Acquisition Regulation	48, 21
Federal Employees Health Benefits Acquisition Regulation	48, 16
Federal Energy Regulatory Commission	5, XXIV; 18, I
Federal Financial Institutions Examination Council	12, XI
Federal Financing Bank	12, VIII
Federal Highway Administration	23, I, II
Federal Home Loan Mortgage Corporation	1, IV
Federal Housing Enterprise Oversight Office	12, XVII
Federal Housing Finance Agency	5, LXXX; 12, XII
Federal Housing Finance Board	12, IX
Federal Labor Relations Authority, and General Counsel of the Federal Labor Relations Authority	5, XIV; 22, XIV
Federal Law Enforcement Training Center	31, VII
Federal Management Regulation	41, 102
Federal Maritime Commission	46, IV
Federal Mediation and Conciliation Service	29, XII
Federal Mine Safety and Health Review Commission	5, LXXIV; 29, XXVII
Federal Motor Carrier Safety Administration	49, III
Federal Prison Industries, Inc.	28, III
Federal Procurement Policy Office	48, 99
Federal Property Management Regulations	41, 101
Federal Railroad Administration	49, II
Federal Register, Administrative Committee of	1, I
Federal Register, Office of	1, II
Federal Reserve System	12, II
Board of Governors	5, LVIII
Federal Retirement Thrift Investment Board	5, VI, LXXVI
Federal Service Impasses Panel	5, XIV
Federal Trade Commission	5, XLVII; 16, I
Federal Transit Administration	49, VI
Federal Travel Regulation System	41, Subtitle F
Fine Arts, Commission on	45, XXI
Fiscal Service	31, II
Fish and Wildlife Service, United States	50, I, IV
Fishery Conservation and Management	50, VI
Food and Drug Administration	21, I
Food and Nutrition Service	7, II
Food Safety and Inspection Service	9, III
Foreign Agricultural Service	7, XV
Foreign Assets Control, Office of	31, V
Foreign Claims Settlement Commission of the United States	45, V
Foreign Service Grievance Board	22, IX
Foreign Service Impasse Disputes Panel	22, XIV
Foreign Service Labor Relations Board	22, XIV
Foreign-Trade Zones Board	15, IV
Forest Service	36, II
General Services Administration	5, LVII; 41, 105
Contract Appeals, Board of	48, 61

Agency	CFR Title, Subtitle or Chapter
Federal Acquisition Regulation	48, 5
Federal Management Regulation	41, 102
Federal Property Management Regulations	41, 101
Federal Travel Regulation System	41, Subtitle F
General	41, 300
Payment From a Non-Federal Source for Travel Expenses	41, 304
Payment of Expenses Connected With the Death of Certain Employees	41, 303
Relocation Allowances	41, 302
Temporary Duty (TDY) Travel Allowances	41, 301
Geological Survey	30, IV
Government Accountability Office	4, I
Government Ethics, Office of	5, XVI
Government National Mortgage Association	24, III
Grain Inspection, Packers and Stockyards Administration	7, VIII; 9, II
Harry S. Truman Scholarship Foundation	45, XVIII
Health and Human Services, Department of	2, III; 5, XLV; 45, Subtitle A,
Centers for Medicare & Medicaid Services	42, IV
Child Support Enforcement, Office of	45, III
Children and Families, Administration for	45, II, III, IV, X
Community Services, Office of	45, X
Family Assistance, Office of	45, II
Federal Acquisition Regulation	48, 3
Food and Drug Administration	21, I
Human Development Services, Office of	45, XIII
Indian Health Service	25, V
Inspector General (Health Care), Office of	42, V
Public Health Service	42, I
Refugee Resettlement, Office of	45, IV
Homeland Security, Department of	2, XXX; 6, I
Coast Guard	33, I; 46, I; 49, IV
Coast Guard (Great Lakes Pilotage)	46, III
Customs and Border Protection Bureau	19, I
Federal Emergency Management Agency	44, I
Human Resources Management and Labor Relations Systems	5, XCVII
Immigration and Customs Enforcement Bureau	19, IV
Immigration and Naturalization	8, I
Transportation Security Administration	49, XII
HOPE for Homeowners Program, Board of Directors of	24, XXIV
Housing and Urban Development, Department of	2, XXIV; 5, LXV; 24, Subtitle B
Community Planning and Development, Office of Assistant Secretary for	24, V, VI
Equal Opportunity, Office of Assistant Secretary for	24, I
Federal Acquisition Regulation	48, 24
Federal Housing Enterprise Oversight, Office of	12, XVII
Government National Mortgage Association	24, III
Housing—Federal Housing Commissioner, Office of Assistant Secretary for	24, II, VIII, X, XX
Housing, Office of, and Multifamily Housing Assistance Restructuring, Office of	24, IV
Inspector General, Office of	24, XII
Public and Indian Housing, Office of Assistant Secretary for	24, IX
Secretary, Office of	24, Subtitle A, VII
Housing—Federal Housing Commissioner, Office of Assistant Secretary for	24, II, VIII, X, XX
Housing, Office of, and Multifamily Housing Assistance Restructuring, Office of	24, IV
Human Development Services, Office of	45, XIII
Immigration and Customs Enforcement Bureau	19, IV
Immigration and Naturalization	8, I
Immigration Review, Executive Office for	8, V
Independent Counsel, Office of	28, VII
Indian Affairs, Bureau of	25, I, V
Indian Affairs, Office of the Assistant Secretary	25, VI

Agency	CFR Title, Subtitle or Chapter
Indian Arts and Crafts Board	25, II
Indian Health Service	25, V
Industry and Security, Bureau of	15, VII
Information Resources Management, Office of	7, XXVII
Information Security Oversight Office, National Archives and Records Administration	32, XX
Inspector General	
Agriculture Department	7, XXVI
Health and Human Services Department	42, V
Housing and Urban Development Department	24, XII
Institute of Peace, United States	22, XVII
Inter-American Foundation	5, LXIII; 22, X
Interior Department	
American Indians, Office of the Special Trustee	25, VII
Endangered Species Committee	50, IV
Federal Acquisition Regulation	48, 14
Federal Property Management Regulations System	41, 114
Fish and Wildlife Service, United States	50, I, IV
Geological Survey	30, IV
Indian Affairs, Bureau of	25, I, V
Indian Affairs, Office of the Assistant Secretary	25, VI
Indian Arts and Crafts Board	25, II
Land Management, Bureau of	43, II
Minerals Management Service	30, II
National Indian Gaming Commission	25, III
National Park Service	36, I
Reclamation, Bureau of	43, I
Secretary of the Interior, Office of	2, XIV; 43, Subtitle A
Surface Mining and Reclamation Appeals, Board of	30, III
Surface Mining Reclamation and Enforcement, Office of	30, VII
Internal Revenue Service	26, I
International Boundary and Water Commission, United States and Mexico, United States Section	22, XI
International Development, United States Agency for	22, II
Federal Acquisition Regulation	48, 7
International Development Cooperation Agency, United States	22, XII
International Fishing and Related Activities	50, III
International Joint Commission, United States and Canada	22, IV
International Organizations Employees Loyalty Board	5, V
International Trade Administration	15, III; 19, III
International Trade Commission, United States	19, II
Interstate Commerce Commission	5, XL
Investment Security, Office of	31, VIII
James Madison Memorial Fellowship Foundation	45, XXIV
Japan–United States Friendship Commission	22, XVI
Joint Board for the Enrollment of Actuaries	20, VIII
Justice Department	2, XXVII; 5, XXVIII; 28, I, XI; 40, IV
Alcohol, Tobacco, Firearms, and Explosives, Bureau of	27, II
Drug Enforcement Administration	21, II
Federal Acquisition Regulation	48, 28
Federal Claims Collection Standards	31, IX
Federal Prison Industries, Inc.	28, III
Foreign Claims Settlement Commission of the United States	45, V
Immigration Review, Executive Office for	8, V
Offices of Independent Counsel	28, VI
Prisons, Bureau of	28, V
Property Management Regulations	41, 128
Labor Department	5, XLII
Benefits Review Board	20, VII
Employee Benefits Security Administration	29, XXV
Employees' Compensation Appeals Board	20, IV
Employment and Training Administration	20, V
Employment Standards Administration	20, VI
Federal Acquisition Regulation	48, 29

Agency	CFR Title, Subtitle or Chapter
Federal Contract Compliance Programs, Office of	41, 60
Federal Procurement Regulations System	41, 50
Labor-Management Standards, Office of	29, II, IV
Mine Safety and Health Administration	30, I
Occupational Safety and Health Administration	29, XVII
Public Contracts	41, 50
Secretary of Labor, Office of	29, Subtitle A
Veterans' Employment and Training Service, Office of the Assistant Secretary for	41, 61; 20, IX
Wage and Hour Division	29, V
Workers' Compensation Programs, Office of	20, I
Labor-Management Standards, Office of	29, II, IV
Land Management, Bureau of	43, II
Legal Services Corporation	45, XVI
Library of Congress	36, VII
Copyright Office	37, II
Copyright Royalty Board	37, III
Local Television Loan Guarantee Board	7, XX
Management and Budget, Office of	5, III, LXXVII; 14, VI; 48, 99
Marine Mammal Commission	50, V
Maritime Administration	46, II
Merit Systems Protection Board	5, II, LXIV
Micronesian Status Negotiations, Office for	32, XXVII
Millenium Challenge Corporation	22, XIII
Mine Safety and Health Administration	30, I
Minerals Management Service	30, II
Minority Business Development Agency	15, XIV
Miscellaneous Agencies	1, IV
Monetary Offices	31, I
Morris K. Udall Scholarship and Excellence in National Environmental Policy Foundation	36, XVI
Museum and Library Services, Institute of	2, XXXI
National Aeronautics and Space Administration	2, XVIII; 5, LIX; 14, V
Federal Acquisition Regulation	48, 18
National Agricultural Library	7, XLI
National Agricultural Statistics Service	7, XXXVI
National and Community Service, Corporation for	45, XII, XXV
National Archives and Records Administration	2, XXVI; 5, LXVI; 36, XII
Information Security Oversight Office	32, XX
National Capital Planning Commission	1, IV
National Commission for Employment Policy	1, IV
National Commission on Libraries and Information Science	45, XVII
National Council on Disability	34, XII
National Counterintelligence Center	32, XVIII
National Credit Union Administration	12, VII
National Crime Prevention and Privacy Compact Council	28, IX
National Drug Control Policy, Office of	21, III
National Endowment for the Arts	2, XXXII
National Endowment for the Humanities	2, XXXIII
National Foundation on the Arts and the Humanities	45, XI
National Highway Traffic Safety Administration	23, II, III; 47, VI; 49, V
National Imagery and Mapping Agency	32, I
National Indian Gaming Commission	25, III
National Institute for Literacy	34, XI
National Institute of Food and Agriculture.	7, XXXIV
National Institute of Standards and Technology	15, II
National Intelligence, Office of Director of	32, XVII
National Labor Relations Board	5, LXI; 29, I
National Marine Fisheries Service	50, II, IV, VI
National Mediation Board	29, X
National Oceanic and Atmospheric Administration	15, IX; 50, II, III, IV, VI
National Park Service	36, I
National Railroad Adjustment Board	29, III
National Railroad Passenger Corporation (AMTRAK)	49, VII
National Science Foundation	2, XXV; 5, XLIII; 45, VI

Agency	CFR Title, Subtitle or Chapter
Federal Acquisition Regulation	48, 25
National Security Council	32, XXI
National Security Council and Office of Science and Technology Policy	47, II
National Telecommunications and Information Administration	15, XXIII; 47, III, IV
National Transportation Safety Board	49, VIII
Natural Resources Conservation Service	7, VI
Navajo and Hopi Indian Relocation, Office of	25, IV
Navy Department	32, VI
Federal Acquisition Regulation	48, 52
Neighborhood Reinvestment Corporation	24, XXV
Northeast Interstate Low-Level Radioactive Waste Commission	10, XVIII
Nuclear Regulatory Commission	2, XX; 5, XLVIII; 10, I
Federal Acquisition Regulation	48, 20
Occupational Safety and Health Administration	29, XVII
Occupational Safety and Health Review Commission	29, XX
Offices of Independent Counsel	28, VI
Oklahoma City National Memorial Trust	36, XV
Operations Office	7, XXVIII
Overseas Private Investment Corporation	5, XXXIII; 22, VII
Patent and Trademark Office, United States	37, I
Payment From a Non-Federal Source for Travel Expenses	41, 304
Payment of Expenses Connected With the Death of Certain Employees	41, 303
Peace Corps	22, III
Pennsylvania Avenue Development Corporation	36, IX
Pension Benefit Guaranty Corporation	29, XL
Personnel Management, Office of	5, I, XXXV; 45, VIII
Human Resources Management and Labor Relations Systems, Department of Defense	5, XCIX
Human Resources Management and Labor Relations Systems, Department of Homeland Security	5, XCVII
Federal Acquisition Regulation	48, 17
Federal Employees Group Life Insurance Federal Acquisition Regulation	48, 21
Federal Employees Health Benefits Acquisition Regulation	48, 16
Pipeline and Hazardous Materials Safety Administration	49, I
Postal Regulatory Commission	5, XLVI; 39, III
Postal Service, United States	5, LX; 39, I
Postsecondary Education, Office of	34, VI
President's Commission on White House Fellowships	1, IV
Presidential Documents	3
Presidio Trust	36, X
Prisons, Bureau of	28, V
Procurement and Property Management, Office of	7, XXXII
Productivity, Technology and Innovation, Assistant Secretary	37, IV
Public Contracts, Department of Labor	41, 50
Public and Indian Housing, Office of Assistant Secretary for	24, IX
Public Health Service	42, I
Railroad Retirement Board	20, II
Reclamation, Bureau of	43, I
Recovery Accountability and Transparency Board	4, II
Refugee Resettlement, Office of	45, IV
Relocation Allowances	41, 302
Research and Innovative Technology Administration	49, XI
Rural Business-Cooperative Service	7, XVIII, XLII, L
Rural Development Administration	7, XLII
Rural Housing Service	7, XVIII, XXXV, L
Rural Telephone Bank	7, XVI
Rural Utilities Service	7, XVII, XVIII, XLII, L
Saint Lawrence Seaway Development Corporation	33, IV
Science and Technology Policy, Office of	32, XXIV
Science and Technology Policy, Office of, and National Security Council	47, II

Agency	CFR Title, Subtitle or Chapter
Secret Service	31, IV
Securities and Exchange Commission	5, XXXIV; 17, II
Selective Service System	32, XVI
Small Business Administration	2, XXVII; 13, I
Smithsonian Institution	36, V
Social Security Administration	2, XXIII; 20, III; 48, 23
Soldiers' and Airmen's Home, United States	5, XI
Special Counsel, Office of	5, VIII
Special Education and Rehabilitative Services, Office of	34, III
Special Inspector General for Iraq Reconstruction	5, LXXXVII
State Department	2, VI; 22, I; 28, XI
Federal Acquisition Regulation	48, 6
Surface Mining and Reclamation Appeals, Board of	30, III
Surface Mining Reclamation and Enforcement, Office of	30, VII
Surface Transportation Board	49, X
Susquehanna River Basin Commission	18, VIII
Technology Administration	15, XI
Technology Policy, Assistant Secretary for	37, IV
Technology, Under Secretary for	37, V
Tennessee Valley Authority	5, LXIX; 18, XIII
Thrift Supervision Office, Department of the Treasury	12, V
Trade Representative, United States, Office of	15, XX
Transportation, Department of	2, XII; 5, L
Commercial Space Transportation	14, III
Contract Appeals, Board of	48, 63
Emergency Management and Assistance	44, IV
Federal Acquisition Regulation	48, 12
Federal Aviation Administration	14, I
Federal Highway Administration	23, I, II
Federal Motor Carrier Safety Administration	49, III
Federal Railroad Administration	49, II
Federal Transit Administration	49, VI
Maritime Administration	46, II
National Highway Traffic Safety Administration	23, II, III; 47, IV; 49, V
Pipeline and Hazardous Materials Safety Administration	49, I
Saint Lawrence Seaway Development Corporation	33, IV
Secretary of Transportation, Office of	14, II; 49, Subtitle A
Surface Transportation Board	49, X
Transportation Statistics Bureau	49, XI
Transportation, Office of	7, XXXIII
Transportation Security Administration	49, XII
Transportation Statistics Bureau	49, XI
Travel Allowances, Temporary Duty (TDY)	41, 301
Treasury Department	5, XXI; 12, XV; 17, IV; 31, IX
Alcohol and Tobacco Tax and Trade Bureau	27, I
Community Development Financial Institutions Fund	12, XVIII
Comptroller of the Currency	12, I
Customs and Border Protection Bureau	19, I
Engraving and Printing, Bureau of	31, VI
Federal Acquisition Regulation	48, 10
Federal Claims Collection Standards	31, IX
Federal Law Enforcement Training Center	31, VII
Fiscal Service	31, II
Foreign Assets Control, Office of	31, V
Internal Revenue Service	26, I
Investment Security, Office of	31, VIII
Monetary Offices	31, I
Secret Service	31, IV
Secretary of the Treasury, Office of	31, Subtitle A
Thrift Supervision, Office of	12, V
Truman, Harry S. Scholarship Foundation	45, XVIII
United States and Canada, International Joint Commission	22, IV
United States and Mexico, International Boundary and Water Commission, United States Section	22, XI
Utah Reclamation Mitigation and Conservation Commission	43, III
Veterans Affairs Department	2, VIII; 38, I

Agency	CFR Title, Subtitle or Chapter
Federal Acquisition Regulation	48, 8
Veterans' Employment and Training Service, Office of the Assistant Secretary for	41, 61; 20, IX
Vice President of the United States, Office of	32, XXVIII
Vocational and Adult Education, Office of	34, IV
Wage and Hour Division	29, V
Water Resources Council	18, VI
Workers' Compensation Programs, Office of	20, I
World Agricultural Outlook Board	7, XXXVIII

List of CFR Sections Affected

All changes in this volume of the Code of Federal Regulations that were made by documents published in the FEDERAL REGISTER since January 1, 2001, are enumerated in the following list. Entries indicate the nature of the changes effected. Page numbers refer to FEDERAL REGISTER pages. The user should consult the entries for chapters and parts as well as sections for revisions.

For the period before January 1, 2001, see the ''List of CFR Sections Affected, 1949–1963, 1964–1972, 1973–1985, and 1986–2000'' published in 11 separate volumes.

2001

49 CFR

66 FR Page

Chapter V

572.113 (b)(2), (3) and (4) revised 51882
572.140 (a)(1) introductory text, (2) and (b)(1) revised 64376
572.144 (b)(1) revised; (c)(7) added 64376
572.146 (a) and Figure P4 revised; (1)(2)(iv) added 64376
572.150 (a)(1) introductory text and (2) revised 45784
572.154 (c)(7) added 45784
572.155 (a) revised; (i)(2)(iv) added 45784
573.3 (a) revised; (g) added 38162
575 Notice of final decision 3388
578.6 (f)(1) and (g)(1) amended; (g)(2) revised 41151
578.7 (b) revised 38384
593 Appendix A revised 48363
595.1—595.4 (Subpart A) Heading added 12655
595.1 Revised 12655
595.2 Revised 12655
595.5 (Subpart B) Heading added 12655
595.6—595.7 (Subpart C) Added 12655
611 Regulation at 65 FR 76880 eff. date stayed in part to 4–6–01 9677
653 Policy statement 41955
Removed 42002
654 Policy statement 41955
Removed 42002
655 Policy statement 41955
Added 42002
660 Inseason adjustments 17639

49 CFR—Continued

66 FR Page

Chapter V—Continued

Temporary regulations 59173

2002

49 CFR

67 FR Page

Chapter V

572.120—572.127 (Subpart N) Heading revised 47327
572.120 (a)(1), (2) and (c)(1) revised 47327
572.124 (b) and (c) revised 47327
572.126 (b) revised; (c)(6) added 47328
572.127 (a), (b) and (k) through (p) revised 47328
572.120-572.127 (Subpart N) Figures N1, N2, N3 and N6 revised 47329
Figure N5 correctly revised 59023
572.130 (a)(1) introductory text, (2) and (c)(1) revised 46413
572.131 (a)(2) revised 46414
572.133 Table B revised 46414
572.134 (b)(1) amended; (c)(7) added 46415
572.136 (c)(6) added 46415
572.137 (a), (b), (m)(3)(ii), (iii) and (6) revised; (m)(2)(iv) added 46415
572.130—572.137 (Subpart O) Figures O1 through O5 revised 46415
573 Heading revised 19697
Technical correction 49263
Heading and authority revised 45872
573.1 Revised 45872
573.2 Revised 45872

49 CFR—Continued

67 FR Page

Chapter V—Continued

573.3 (a) revised; (h) and (i) added 19697
573.4 Amended 45872
573.5 Redesignated as 573.6; new 573.5 added 45872
573.6 Redesignated as 573.7; new 573.6 redesignated from 573.5 45872
(c)(7), (8)(i), and (10) revised 64063
573.7 Redesignated as 573.8; new 573.7 redesignated from 573.6 45872
573.8 Removed; new 573.8 redesignated from 573.7 45872
573.11 Added 19697
573.12 Added 19698
573.13 Added 64063
573.14 Added 72392
574 Authority revised 45872
Technical correction 49263
574.5 (d) and Figures 1 and 2 revised 69628
574.7 (d) revised 45872
574.10 Amended 45872
575 Heading and authority citation revised 67494
575.1—575.7 (Subpart A) Heading revised 67494
575.6 Amended; (a)(4) and (5) added 69631
575.101—575.105 (Subpart B) Heading revised 67494
575.201 (Subpart C) Added 67494
576 Authority revised 45872
Technical correction 49263
576.1 Revised 45872
576.3 Revised 45873
576.4 Revised 45874
576.5 Revised 45874
576.6 Revised 45874
577.11 Added 64065
577.12 Added 72393
579 Revised 45874
579.2 Revised 63310
579.3 (a) revised; (b) and (c) redesignated as (c) and (d); new (b) added 63310
579.4 (c) and (d) amended 63310
579.11—579.20 (Subpart B) Revised 63310
Technical correction 49263
590 Revised 38748
593 Appendix A revised 59099
594.6 (a) introductory text, (b), (h) and (i) revised; (d) amended 60599
(d) correctly added 62897

49 CFR—Continued

67 FR Page

Chapter V—Continued

594.7 (e) revised 60599
594.8 (c) amended 60599
594.9 (c) revised 60599
594.10 (d) revised 60599
595 Actions on petitions 38423
597 Added 69631

Chapter VI

624 Added 40104
659.5 Amended 15727
Regulation at 67 FR 15727 withdrawn 44091
659.39 Amended 15727
Regulation at 67 FR 15727 withdrawn 44091
659.41 (a) and (b) amended 15727
Regulation at 67 FR 15727 withdrawn 44091
659.45 (b) and (c) amended 15727
Regulation at 67 FR 15727 withdrawn 44091

2003

49 CFR

68 FR Page

Chapter V

572 Actions on petitions 13856
573.3 (b) through (f) amended 18142
574.5 Regulation at 67 FR 69628 eff. date delayed to 9–1–04 33655
575 Policy statement 59250
575.6 Regulation at 67 FR 69631 eff. date delayed to 9–1–04 33655
575.104 (e)(1)(iv) revised 35185
Heading correctly revised 43339
577.5 (a) amended 18142
577.10 (a) amended 18142
579.4 (c) amended 4113, 18142, 35142
579.5 (d) revised 18142
(d) amended 35147
579.6 Revised 4113
579.11 (d)(2) revised; (e) amended 4113
579.21 Introductory text amended 18142
(b) introductory text and (d) revised 35142
579.22 Introductory text amended 18142
(a) amended; (b) introductory text and (d) revised 35143
579.23 Introductory text amended 18142
(b) introductory text and (d) revised; (c) amended 35143

49 CFR—Continued

68 FR Page

Chapter V—Continued

579.24 Introductory text amended 18143
(a), (b) introductory text and (d) revised 35143
579.25 Introductory text amended 18143
Introductory text, (a), and (b)(2) amended; (b) introductory text and (d) revised 35144
579.26 Introductory text amended 18143
Introductory text revised; (a), (c) and (d) amended; (b) introductory text added 35144
579.27 (a) revised 18143
(b) amended; (c)(6) added 35144
579.28 (c) revised 18143
(c) corrected 20225
(b) amended; (h) through (l) redesignated as (i) through (m); new (h) added 35144
(a), (b), and (c)(1) revised; (n) added 35148
(c)(1) introductory text revised 64569
579.29 (b) amended 35145
585.4 (g) revised 55320
587.6 (b)(1) revised 44472
586 Revised 67086
590 Removed 65409
590.3 Revised 4111
593 Appendix A revised 55546
596.5 Introductory text revised 38231
Corrected 54861
596.6 (b)(2) revised 38231
596.7 Revised 38231
597 Regulation at 67 FR 69631 eff. date delayed to 9–1–04 33655

Chapter VI

655.4 Amended 75462
655.72 (d) through (g) revised 75462
655 Appendixes A through D removed 75462
661 Authority citation revised 9799
661.13 (b) revised 9799
665.3 Regulation at 58 FR 58733 confirmed 15674
665.5 Regulation at 58 FR 58735 confirmed 15674

Chapter VIII

821 Revised 22625

2004

49 CFR

69 FR Page

Chapter V

572.160—572.167 (Subpart S) Added; eff. 1-12-05 42602
573 Authority citation revised 34959
Actions on petitions 49819
573.1 Revised; eff. 10–21–04 34959
573.6 (c)(8)(ii) revised; eff. 10–21–04 34959
(c)(9), (10) and (11) redesignated as (c)(10), (11) and (12); new (c)(9) added; eff. 11-12-04 50084
573.7 (b)(7) added; eff. 11-12-04 50085
573.8 Heading and (a) revised; eff. 10–21–04 34959
574 Authority citation corrected 51400
574.5 Regulation at 67 FR 69628 and 68 FR 37981 eff. date delayed to 9-1-05 31317
(d) revised; eff. 9-1-05 31320
Introductory text correctly amended; (d) correctly revised 51400
(e) added 64501
575.6 Regulation at 67 FR 69631 and 68 FR 37981 eff. date delayed to 9-1-05 31317
(a)(4) introductory text and (5) revised; eff. 9-1-05 31320
577 Authority citation revised 34959
Actions on petitions 49819
577.1 Revised; eff. 10–21–04 34959
577.2 Amended; eff. 10–21–04 34959
577.7 (c) and (d) added; eff. 10–21–04 34959
577.13 Added; eff. 10–21–04 34960
578.6 (a)(1), (2), (c)(2) and (d) revised; eff. 10-28-04 57866
579.4 (c) amended 20557
579.5 (a) revised 49823
579.28 (b) and (n) revised; eff. 10-28-04 57869
581.3 Policy statement 61322
585 Revised 70916
586 Removed 70919
586.6 (a)(4) revised 51399
589 Removed 70919
590 Removed 70919
591 Authority citation revised 52092
591.4 Amended 52092
591.5 (f)(2)(ii) amended; (f)(3) and (g) added 52092
591.6 (c) revised 52092
591.7 (e) revised 52092
591.8 (d) introductory text, (1), (3) and (6) revised 52092

49 CFR—Continued

69 FR Page

Chapter V—Continued

591 Appendixes A and B amended 52093
592 Authority citation revised 52094
592.4 Amended 52094
592.5 (a)(3), (4), (5), (9), (11), (b), (d), (e) and (f) revised; (h) added 52094
592.6 Revised 52095
592.7 Revised 52098
592.8 (a) and (e) revised; (c) and (d) amended 52100
592.9 Revised 52100
593 Appendix A revised 58356
594.5 (e) and (g) removed; (h) and (i) redesignated as (e) and (g); (f) and new (g) revised 52100
594.6 (a) introductory text, (b), (d) and (i) revised; (h) amended 57873
594.7 (e) revised 57873
594.8 (b) revised; (c) amended 57874
594.9 (a) revised 52100
(c) revised 57874
594.10 (d) revised 57874
595.5 (b)(3)(ii)(B) revised 31034
595.7 (c)(9) revised 21069
596 Removed 70919
597 Regulation at 67 FR 69631 and 68 FR 37981 eff. date delayed to 9-1-05 31317
597 Removed 70919
597.6 (a) amended; eff. 9-1-05 31321
Title 49 Nomenclature change 18803

2005

49 CFR

70 FR Page

Chapter V

572.160 (a)(1)(iii) and (v) revised 77338
572.161 (a) Table A amended 77338
572.165 (a) and (b)(1) revised 77338
573 Actions on petitions 16742
573.6 (b) revised 38814
575.6 Amended; eff. 6–21–06 35557
575.103 (e)(2)(ii) revised 39970
575.104 Appendix A amended 20723
577.5 (g)(1)(vii) revised 35557
577.7 (c)(1) revised 38814
577.13 (c) removed; (d) redesignated as new (c) 38815
578.6 (f)(1) and (g)(1) amended; (g)(2) revised; eff. 10–11–05 53311
579.28 (b) revised 2023
582.5 Amended; eff. 6–21–06 35557
585.61—585.68 (Subpart G) Added 18190

49 CFR—Continued

70 FR Page

Chapter V—Continued

585.66 (b)(1) and (2) revised; eff. 10–7–05 53101
586.5 Revised 46435
586.6 Revised 46435
586.7 Revised 46435
588.5 Revised; eff. 11-08-05 53579
592.5 (a)(4)(i) and (ii) revised; (a)(4)(iii) and (f) amended 57801
592.6 (d)(1)(ii) and (e)(1) revised 57801
593 Appendix A revised 57195
595 Heading revised; eff. 10–31–05 51678
595.7 (c)(7)(iv), (v) and (16) added; (c)(14) revised; eff. 10–31–05 51678

Chapter VI

601 Revised 67318
622 Authority citation revised 24470
659 Revised 22578

2006

49 CFR

71 FR Page

Chapter V

572 Actions on petitions 45427
572.180—572.189 (Subpart U) Added 75331
572.190—572.200 (Subpart V) Added 75370
574.7 Figure 3(b) added 39233
575 Authority citation revised 53585
575.1—575.7 (Subpart A) Heading revised; eff. 11–13–06 53585
575.6 Regulation at 70 FR 35551 eff. date delayed 35559
575.301 (Subpart D) Added; eff. 11–13–06 53585
578.6 (a)(2) redesignated as (a)(3); new (a)(2) added; (a)(1) and new (3) revised 28281
582.5 Regulation at 70 FR 35551 eff. date delayed 35559
585.14 (c) redesignated as (d); new (c) added; eff. 11-29-06 51779
585.15 (b)(3) added; (d) revised; eff. 11-29-06 51779
585.16 Revised; eff. 11-29-06 51779
591 Actions on petitions 10846
592 Actions on petitions 10846
593 Appendix A revised 56029
594 Actions on petitions 10846
594.6 (a) introductory text, (b), (d) and (i) revised; (h) amended 43989
594.7 (e) revised 43990
594.8 (b) revised; (c) amended 43990

49 CFR—Continued

71 FR Page

Chapter V—Continued
594.9 (c) revised 43990
594.10 (d) revised 43990

Chapter VI
655.3 (a) introductory text revised; (c) added 69198
655.83 (d) added 69198
661 Authority citation revised 14117
661.3 Revised 14117
661.6 Revised 14117
661.7 Appendix A amended 14117
661.9 (b) and (d) revised 14117
661.12 Revised 14117
661.13 (b) introductory text, (1), (2) and (c) revised; (b)(1)(i) and (ii) added 14117
661.15 (a), (b), (d) and (g) revised 14118
661.17 Revised 14118
661.19 Revised 14118
661.20 Revised 14118
663 Authority citation revised 14118
663.37 (c) revised 14118

2007

49 CFR

72 FR Page

573 Authority citation revised 32016
573.6 (c)(10) revised; (c)(11) removed; (c)(12) redesignated as new (c)(11) and revised 32016
573.9 Revised 32016
573.10 (a) revised 32016
575.301 (b), (e)(4)(iii), (v), (5)(iii), (v), (10)(ii), (f)(2) and (3) revised; (e)(4)(iv), (vi), (5)(iv), (vi), (6)(iii), (f)(4) and (5) amended; eff. 10–12–07 45176
577.5 (a) and (g)(1)(vii) introductory text revised 32016
579 Authority citation amended 29443, 32017
579.4 (c) amended; eff. in part 1–1–08 29443
579.5 (a) revised 32017
579.6 (a) revised 32017
579.21 (d) amended 29443
579.22 (d) amended 29443
579.23 (d) amended 29443
579.24 (d) amended 29443
579.25 (d) amended 29444
579.28 (f)(2)(i) and (ii) revised 29444
579.29 (f) revised 32017
585 (Subpart H) Added 17316
585.71—585.77 (Subpart H) Added; eff. 11–13–07 51972

49 CFR—Continued

72 FR Page

585.81—585.88 (Subpart I) Added 17316
585.91—585.97 (Subpart J) Added 25523
593 Appendix A revised 54849

Chapter VI
601.40—601.47 (Subpart D) Added 912
613.100 (Subpart A) Revised 7285
613.200 (Subpart B) Revised 7285
624 Authority citation and heading revised 15052
624.1 Revised 15052
624.3 (a) and (c)(3) through (6) revised 15053
624.5 Revised 15053
624.9 Revised 15053
624.11 (a) introductory text and (c) revised 15053
624 Appendix A removed 15054
630 Revised 68761
661 Authority citation amended 53696
661 Heading revised; eff. 10–22–07 53696
661.1 Amended; eff. 10–22–07 53696
661.3 Revised; eff. 10–22–07 53696
661.6 Amended; eff. 10–22–07 53696
661.7 (a), (c), (e), (f) and Appendix A amended; (b) revised; (c)(3) added; eff. 10–22–07 53697
661.9 (a) amended; eff. 10–22-07 53697
661.11 (s) removed; (t)(14) through (22), (u)(18) through (30), (v)(28), (29), (30) and Appendix D added; Appendices B and C amended; eff. 10–22–07 53697
Appendix D corrected; eff. 10–22–07 55103
661.12 Amended; eff. 10–22–07 53698
661.18 Introductory text amended; eff. 10–22–07 53698

Chapter VIII
801 Revised 18915

2008

49 CFR

73 FR Page

Chapter V
572.180 (a)(1), (2) introductory text, (3), (b) and (c)(1) revised 33920
572.181 (a), (b) and (c) revised 33921
572.183 (a) Table 1 heading, (b)(1), (5) and (c)(1) revised 33921

49 CFR—Continued

73 FR Page

Chapter V—Continued

572.185 (b)(1)(i) and (c)(2) revised 33921
572.187 (b)(1) and (5) revised 33921
572.188 (b)(4) and (c) revised; (b)(6) added 33921
572.180—572.189 (Subpart U) Appendix A amended 33921
574.7 (a)(2) and (3) revised; (d) figures 3a, 3b and 4 removed; (e) and (f) added 72368
574.8 Revised 72368
578.6 (f)(1) and (h)(1) revised 9956
585.31—585.37 (Subpart D) Revised 66801
585.75 Revised 32485
585.76 (a), (b), (c) and (d)(2) revised 32485
585.77 Revised 32485
593 Appendix A revised 56743
594.6 (a) introductory text, (b), (d) and (i) revised; (h) amended 54986
594.7 Heading and (e) revised 54986
594.8 (b) revised; (c) amended 54986
594.9 Heading revised; (d) and (e) added 39896
(c) revised 54986
594.10 (d) revised 54986

Chapter VI

604 Revised 2345
Authority citation added 44931
604 Appendices B and C revised 44931
Appendix D revised 44935
Appendix D correctly amended 46554
605 Policy statement 53384
622.101 (Subpart A) Authority citation revised 13401
622.101 Revised 13401

2009

49 CFR

74 FR Page

Chapter V

572.137 (a) and (b) amended 29894
572.190 (a)(1), (2) introductory text, (3), (b) and (c)(1) revised 29894
572.191 (a), (b) and (c) revised 29895
572.193 (c)(1) revised 29895
572.194 (b)(7), (10) and (c) revised; (b)(11) added 29895

49 CFR—Continued

74 FR Page

Chapter V—Continued

572.195 (b)(7), (c)(1)(ii), (2) and (3) revised; (b)(11) and (12) added 29895
572.196 (b)(3), (c)(1)(i), (iii), (2) and (3) revised; (b)(10) added 29895
572.197 (b)(3), (9), (c)(1) and (2) revised; (b)(10) added 29896
572.198 (b)(7), (c)(2) and (3) revised; (b)(11) and (12) added 29896
572.199 (a), (b)(4) through (9), (c)(1), (2) and (3) revised; (b)(10) and (11) added 29896
572.200 (j) revised 29896
572.190—572.200 (Subpart V) Appendix A amended 29896
573.6 (c)(2)(iii) and (iv) revised; eff. 10-19-09 47757
579.4 (c) amended; eff. 10-19-09 47757
579.21 Heading revised; introductory text amended; eff. 10-19-09 47757
579.22 Heading, introductory text and (b) introductory text revised; eff. 10-19-09 47757
579.23 Heading revised; introductory text amended; eff. 10-19-09 47758
579.24 Heading revised; introductory text amended; eff. 10-19-09 47758
579.27 Heading revised; eff. 10-19-09 47758
579.29 (a)(3) added; eff. 10-19-09 47758
580 Determination 643
585.111—585.117 (Subpart L) Added 22387
593 Appendix A revised 41069
599 Added 37897
599.201 (a)(1) revised 38976
599.300 (a), (d) introductory text, (2) and (3) revised 38976
599.600—599.603 (Subpart F) Added 49340
599 Appendix A revised 38976
Appendix E revised 38981

Chapter VI

622 Authority citation revised 12530
661.3 Appendix A revised 30239
661.5 (c) revised 30239
661.7 Appendix A revised 30239
661.11 (v)(31) added 30239
661.12 Amended 30239
665 Revised 51089

2010

(Regulations published from January 1, 2010, through October 1, 2010)

49 CFR

75 FR Page

Chapter V

575 Authority citation revised 15944
575.1 Revised 15944
575.2 (a) and (c) revised 15944
575.3 Revised 15944
575.104 (e)(2)(ix)(C), (f)(1)(ii) through (v) and (vii) revised 15944
575.106 Added 15945
578 Authority citation revised..... 5248
578.6 (a)(2)(ii), (c)(2), (d), (f)(1), (g)(1) and (2) revised..... 5248
580 Determination..... 20925
593 Appendix A revised..... 57398
594.6 (a) introductory text, (b) and (i) revised; (d) and (h) amended..... 48612

49 CFR—Continued

75 FR Page

Chapter V—Continued

594.7 (e) amended 48613
594.8 (b) and (c) amended 48613
594.9 (c) and (e) revised 48613
594.10 (d) revised 48613
595.6 (a) introductory text correctly revised 47489
595.7 (c)(1), (3) and (14) correctly revised 47489
599.401 (a)(3) revised; (d) added 5251

Chapter VIII

830 Authority citation revised 927
830.2 Amended; eff. 10-25-10..... 51955
830.5 Introductory text, (a) introductory text, (3), (4), (5) and footnote 1 revised; (a)(8) through (12) added..... 927
830.15 (a)(12) and Footnote 1 correctly revised 35330