AUTHENTICATED
U.S. GOVERNMENT
INFORMATION
GPO



FIGURE 10 TO PART 1203—CENTER OF GRAVITY FOR DROP ASSEMBLY

## Overhead View of Ball-Arm as Installed on Impact Test Apparatus

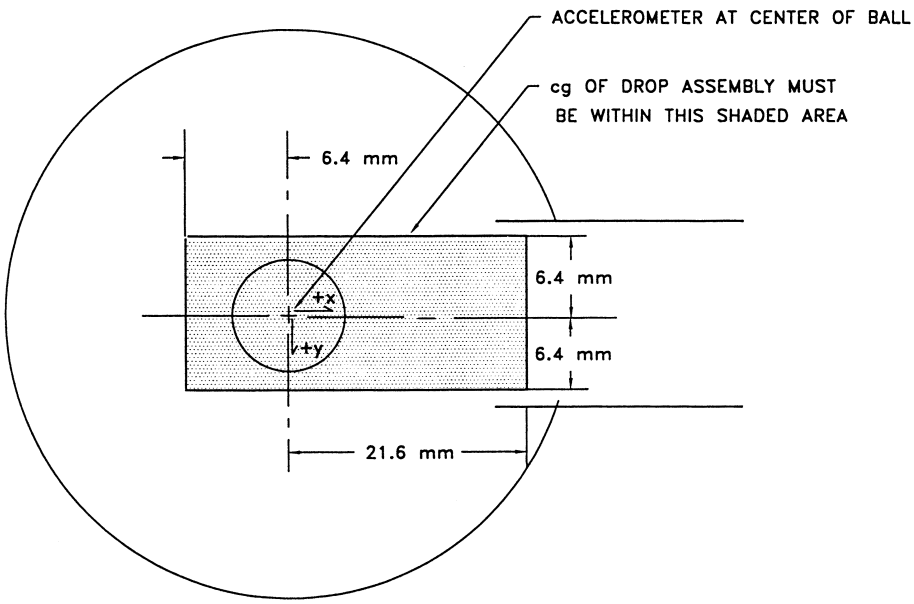


**Figure 10. Center of Gravity for Drop Assembly**