AUTHENTICATED
U.S. GOVERNMENT
INFORMATION
GPO

FIGURE 9 TO PART 1203—IMPACT TEST APPARATUS

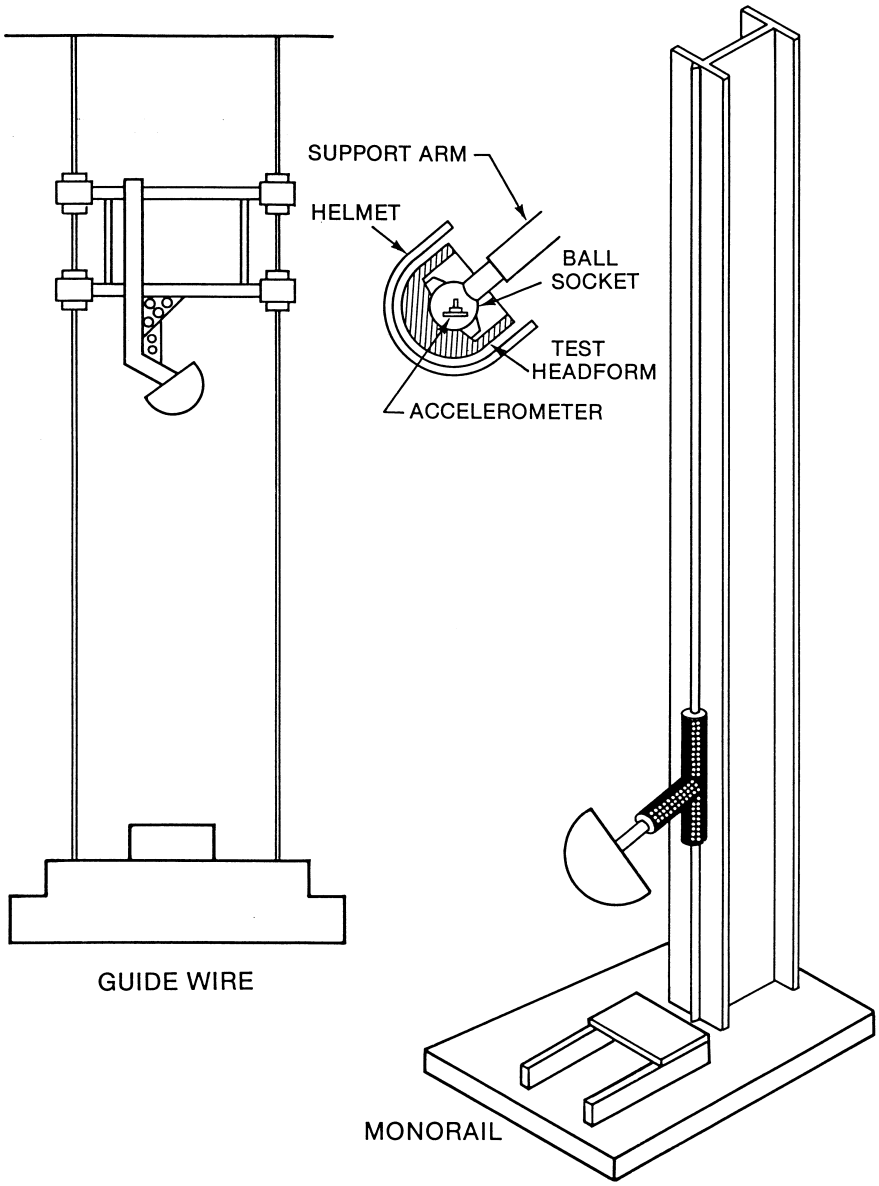

Figure 9. Impact Test Apparatus