AUTHENTICATED
U.S. GOVERNMENT
INFORMATION
GPO

FIGURE 2 TO PART 1508—HEADFORM PROBE

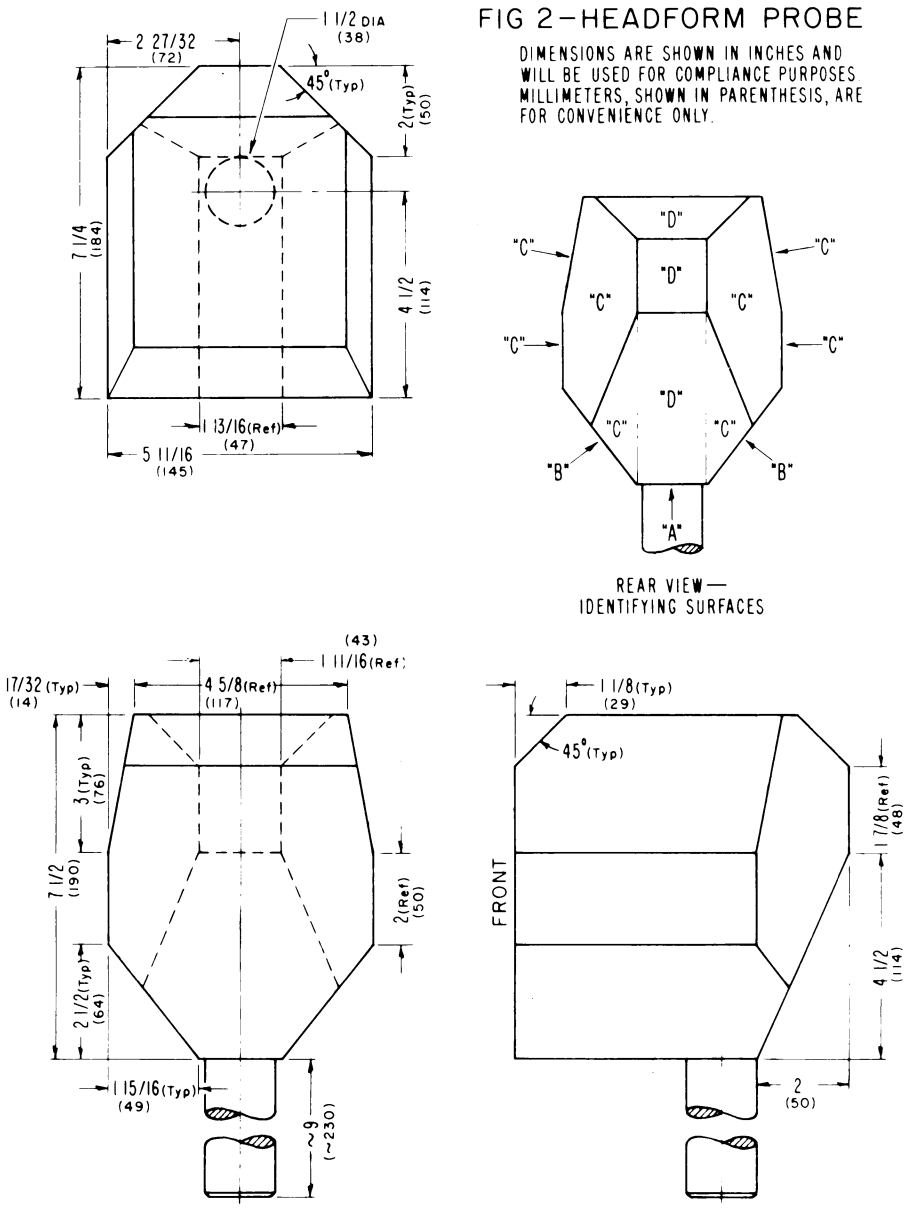

[47 FR 47544, Oct. 27, 1982]