AUTHENTICATED
U.S. GOVERNMENT
INFORMATION
GPO

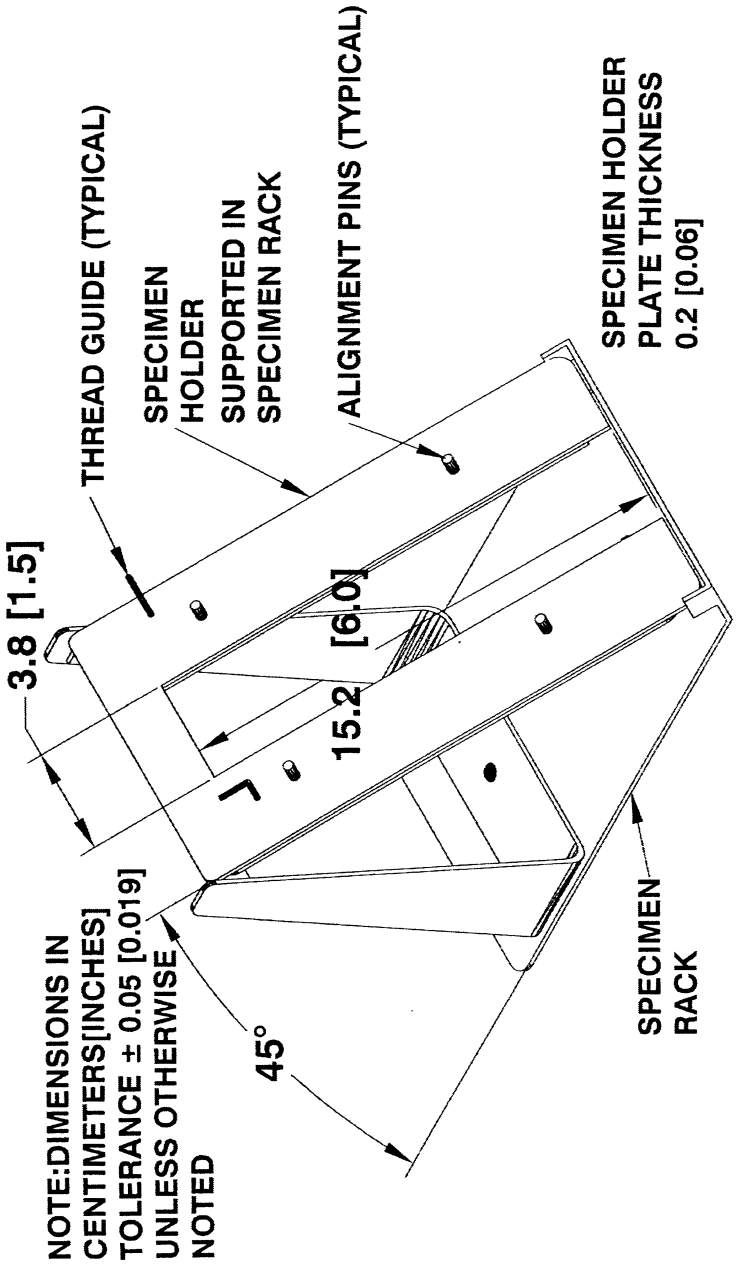

SPECIMEN HOLDER SUPPORTED IN SPECIMEN RACK
FIGURE 3

FIGURE 4 TO PART 1610—AN EXAMPLE OF A TYPICAL INDICATOR FINGER

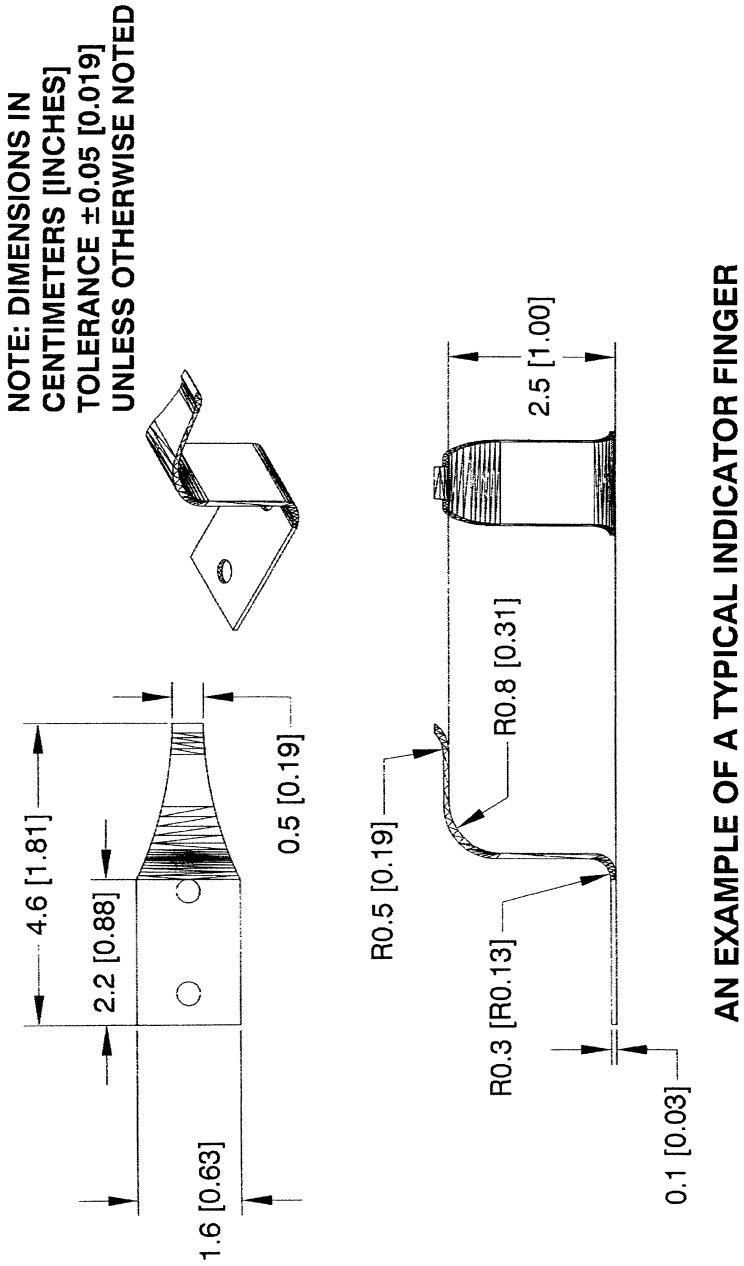

FIGURE 5 TO PART 1610—AN EXAMPLE OF A TYPICAL GAS SHIELD