AUTHENTICATED
U.S. GOVERNMENT
INFORMATION
GPO

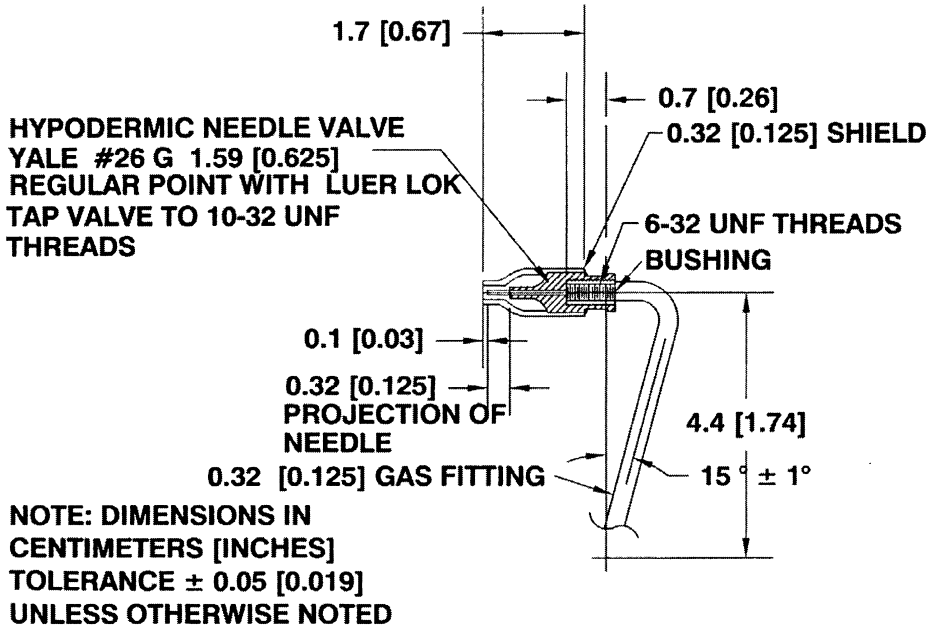

AN EXAMPLE OF A TYPICAL IGNITER
FIGURE 6

[73 FR 62187, Oct. 20, 2008]

FIGURE 7 TO PART 1610—BRUSHING DEVICE

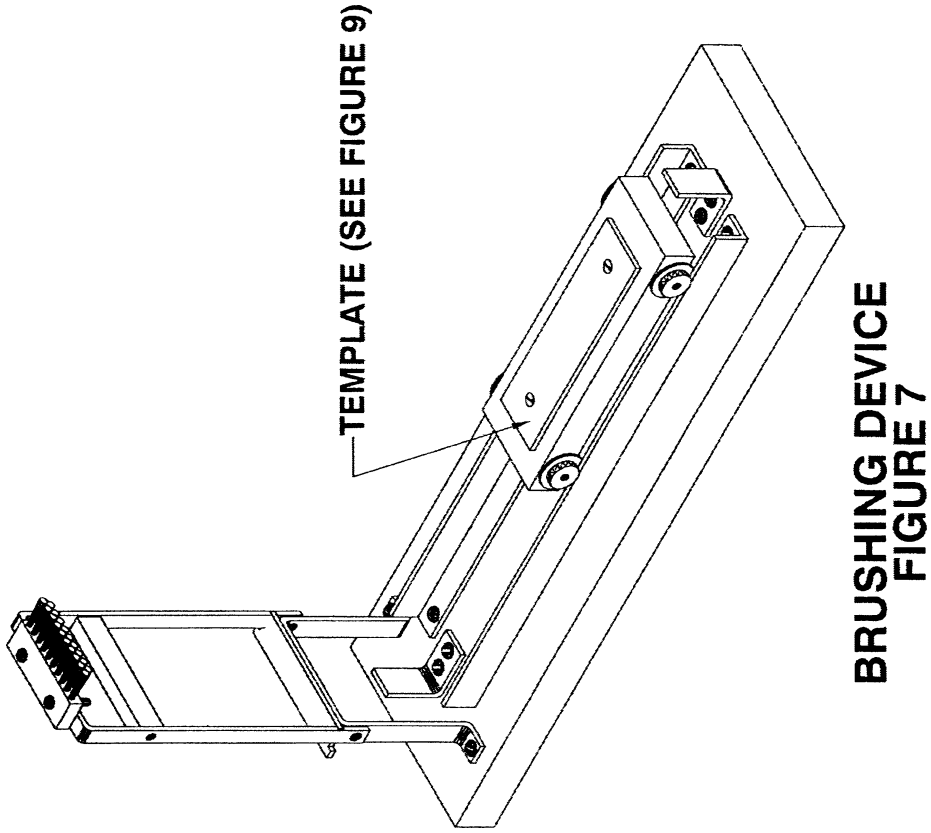

FIGURE 8 TO PART 1610—BRUSH