AUTHENTICATED
U.S. GOVERNMENT
INFORMATION
GPO

PART 36—NONDISCRIMINATION ON THE BASIS OF DISABILITY BY PUBLIC ACCOMMODATIONS AND IN COMMERCIAL FACILITIES

Subpart A—General

Sec.
36.101 Purpose.
36.102 Application.
36.103 Relationship to other laws.
36.104 Definitions.
36.105–36.199 [Reserved]

Subpart B—General Requirements

36.201 General.
36.202 Activities.
36.203 Integrated settings.
36.204 Administrative methods.
36.205 Association.
36.206 Retaliation or coercion.
36.207 Places of public accommodations located in private residences.
36.208 Direct threat.
36.209 Illegal use of drugs.
36.210 Smoking.
36.211 Maintenance of accessible features.
36.212 Insurance.
36.213 Relationship of subpart B to subparts C and D of this part.
36.214–36.299 [Reserved]

Subpart C—Specific Requirements

36.301 Eligibility criteria.
36.302 Modifications in policies, practices, or procedures.
36.303 Auxiliary aids and services.
36.304 Removal of barriers.
36.305 Alternatives to barrier removal.
36.306 Personal devices and services.
36.307 Accessible or special goods.
36.308 Seating in assembly areas.
36.309 Examinations and courses.
36.310 Transportation provided by public accommodations.
35.311 Mobility devices.
36.312–36.399 [Reserved]

Subpart D—New Construction and Alterations

36.401 New construction.
36.402 Alterations.
36.403 Alterations: Path of travel.
36.404 Alterations: Elevator exemption.
36.405 Alterations: Historic preservation.
36.406 Standards for new construction and alterations.
36.407–36.499 [Reserved]

Subpart E—Enforcement

36.501 Private suits.
36.502 Investigations and compliance reviews.
36.503 Suit by the Attorney General.
36.504 Relief.
36.505 Attorneys fees.
36.506 Alternative means of dispute resolution.
36.507 Effect of unavailability of technical assistance.
36.508 Effective date.
36.509–36.599 [Reserved]

Subpart F—Certification of State Laws or Local Building Codes

36.601 Definitions.
36.602 General rule.
36.603 Preliminary determination.
36.604 Procedure following preliminary determination of equivalency.
36.605 Procedure following preliminary denial of certification.
36.606 Effect of certification.
36.607 Guidance concerning model codes.

APPENDIX A TO PART 36—GUIDANCE ON REVISIONS TO ADA REGULATION ON NONDISCRIMINATION ON THE BASIS OF DISABILITY BY PUBLIC ACCOMMODATIONS AND COMMERCIAL FACILITIES

APPENDIX B TO PART 36—ANALYSIS AND COMMENTARY ON THE 2010 ADA STANDARDS FOR ACCESSIBLE DESIGN

APPENDIX C TO PART 36—GUIDANCE ON ADA REGULATION ON NONDISCRIMINATION ON THE BASIS OF DISABILITY BY PUBLIC ACCOMMODATIONS AND IN COMMERCIAL FACILITIES ORIGINALLY PUBLISHED ON JULY 26, 1991

APPENDIX D TO PART 36—1991 STANDARDS FOR ACCESSIBLE DESIGN AS ORIGINALLY PUBLISHED ON JULY 26, 1991

AUTHORITY: 5 U.S.C. 301; 28 U.S.C. 509, 510; 42 U.S.C. 12186(b).

SOURCE: Order No. 1513–91, 56 FR 35592, July 26, 1991, unless otherwise noted.

Subpart A—General

§ 36.101 Purpose.

The purpose of this part is to implement title III of the Americans with Disabilities Act of 1990 (42 U.S.C. 12181), which prohibits discrimination on the basis of disability by public accommodations and requires places of public accommodation and commercial facilities to be designed, constructed, and altered in compliance with the accessibility standards established by this part.

§ 36.102 Application.

(a) *General.* This part applies to any—

(1) Public accommodation;

(2) Commercial facility; or

(3) Private entity that offers examinations or courses related to applications, licensing, certification, or credentialing for secondary or postsecondary education, professional, or trade purposes.

(b) *Public accommodations.* (1) The requirements of this part applicable to public accommodations are set forth in subparts B, C, and D of this part.

(2) The requirements of subparts B and C of this part obligate a public accommodation only with respect to the operations of a place of public accommodation.

(3) The requirements of subpart D of this part obligate a public accommodation only with respect to—

(i) A facility used as, or designed or constructed for use as, a place of public accommodation; or

(ii) A facility used as, or designed and constructed for use as, a commercial facility.

(c) *Commercial facilities.* The requirements of this part applicable to commercial facilities are set forth in subpart D of this part.

(d) *Examinations and courses.* The requirements of this part applicable to private entities that offer examinations or courses as specified in paragraph (a) of this section are set forth in § 36.309.

(e) *Exemptions and exclusions.* This part does not apply to any private club (except to the extent that the facilities of the private club are made available to customers or patrons of a place of public accommodation), or to any religious entity or public entity.

§ 36.103 Relationship to other laws.

(a) *Rule of interpretation.* Except as otherwise provided in this part, this part shall not be construed to apply a lesser standard than the standards applied under title V of the Rehabilitation Act of 1973 (29 U.S.C. 791) or the regulations issued by Federal agencies pursuant to that title.

(b) *Section 504.* This part does not affect the obligations of a recipient of Federal financial assistance to comply with the requirements of section 504 of the Rehabilitation Act of 1973 (29 U.S.C. 794) and regulations issued by Federal agencies implementing section 504.

(c) *Other laws.* This part does not invalidate or limit the remedies, rights, and procedures of any other Federal laws, or State or local laws (including State common law) that provide greater or equal protection for the rights of individuals with disabilities or individuals associated with them.

§ 36.104 Definitions.

For purposes of this part, the term—

1991 Standards means requirements set forth in the ADA Standards for Accessible Design, originally published on July 26, 1991, and republished as appendix D to this part.

2004 ADAAG means the requirements set forth in appendices B and D to 36 CFR part 1191 (2009).

2010 Standards means the 2010 ADA Standards for Accessible Design, which consist of the 2004 ADAAG and the requirements contained in subpart D of this part.

Act means the Americans with Disabilities Act of 1990 (Pub. L. 101–336, 104 Stat. 327, 42 U.S.C. 12101–12213 and 47 U.S.C. 225 and 611).

Commerce means travel, trade, traffic, commerce, transportation, or communication—

(1) Among the several States;

(2) Between any foreign country or any territory or possession and any State; or

(3) Between points in the same State but through another State or foreign country.

Commercial facilities means facilities—

(1) Whose operations will affect commerce;

(2) That are intended for nonresidential use by a private entity; and

(3) That are not—

(i) Facilities that are covered or expressly exempted from coverage under the Fair Housing Act of 1968, as amended (42 U.S.C. 3601–3631);

(ii) Aircraft; or

(iii) Railroad locomotives, railroad freight cars, railroad cabooses, commuter or intercity passenger rail cars (including coaches, dining cars, sleeping cars, lounge cars, and food service cars), any other railroad cars described in section 242 of the Act or covered under title II of the Act, or railroad

rights-of-way. For purposes of this definition, ''rail'' and ''railroad'' have the meaning given the term ''railroad'' in section 202(e) of the Federal Railroad Safety Act of 1970 (45 U.S.C. 431(e)).

Current illegal use of drugs means illegal use of drugs that occurred recently enough to justify a reasonable belief that a person's drug use is current or that continuing use is a real and ongoing problem.

Direct threat means a significant risk to the health or safety of others that cannot be eliminated by a modification of policies, practices, or procedures, or by the provision of auxiliary aids or services, as provided in § 36.208.

Disability means, with respect to an individual, a physical or mental impairment that substantially limits one or more of the major life activities of such individual; a record of such an impairment; or being regarded as having such an impairment.

(1) The phrase *physical or mental impairment* means—

(i) Any physiological disorder or condition, cosmetic disfigurement, or anatomical loss affecting one or more of the following body systems: neurological; musculoskeletal; special sense organs; respiratory, including speech organs; cardiovascular; reproductive; digestive; genitourinary; hemic and lymphatic; skin; and endocrine;

(ii) Any mental or psychological disorder such as mental retardation, organic brain syndrome, emotional or mental illness, and specific learning disabilities;

(iii) The phrase physical or mental impairment includes, but is not limited to, such contagious and noncontagious diseases and conditions as orthopedic, visual, speech, and hearing impairments, cerebral palsy, epilepsy, muscular dystrophy, multiple sclerosis, cancer, heart disease, diabetes, mental retardation, emotional illness, specific learning disabilities, HIV disease (whether symptomatic or asymptomatic), tuberculosis, drug addiction, and alcoholism;

(iv) The phrase *physical or mental impairment* does not include homosexuality or bisexuality.

(2) The phrase *major life activities* means functions such as caring for one's self, performing manual tasks, walking, seeing, hearing, speaking, breathing, learning, and working.

(3) The phrase *has a record of such an impairment* means has a history of, or has been misclassified as having, a mental or physical impairment that substantially limits one or more major life activities.

(4) The phrase *is regarded as having an impairment* means—

(i) Has a physical or mental impairment that does not substantially limit major life activities but that is treated by a private entity as constituting such a limitation;

(ii) Has a physical or mental impairment that substantially limits major life activities only as a result of the attitudes of others toward such impairment; or

(iii) Has none of the impairments defined in paragraph (1) of this definition but is treated by a private entity as having such an impairment.

(5) The term *disability* does not include—

(i) Transvestism, transsexualism, pedophilia, exhibitionism, voyeurism, gender identity disorders not resulting from physical impairments, or other sexual behavior disorders;

(ii) Compulsive gambling, kleptomania, or pyromania; or

(iii) Psychoactive substance use disorders resulting from current illegal use of drugs.

Drug means a controlled substance, as defined in schedules I through V of section 202 of the Controlled Substances Act (21 U.S.C. 812).

Existing facility means a facility in existence on any given date, without regard to whether the facility may also be considered newly constructed or altered under this part.

Facility means all or any portion of buildings, structures, sites, complexes, equipment, rolling stock or other conveyances, roads, walks, passageways, parking lots, or other real or personal property, including the site where the building, property, structure, or equipment is located.

Housing at a place of education means housing operated by or on behalf of an elementary, secondary, undergraduate, or postgraduate school, or other place of education, including dormitories,

suites, apartments, or other places of residence.

Illegal use of drugs means the use of one or more drugs, the possession or distribution of which is unlawful under the Controlled Substances Act (21 U.S.C. 812). The term ''illegal use of drugs'' does not include the use of a drug taken under supervision by a licensed health care professional, or other uses authorized by the Controlled Substances Act or other provisions of Federal law.

Individual with a disability means a person who has a disability. The term ''individual with a disability'' does not include an individual who is currently engaging in the illegal use of drugs, when the private entity acts on the basis of such use.

Other power-driven mobility device means any mobility device powered by batteries, fuel, or other engines—whether or not designed primarily for use by individuals with mobility disabilities—that is used by individuals with mobility disabilities for the purpose of locomotion, including golf cars, electronic personal assistance mobility devices (EPAMDs), such as the Segway® PT, or any mobility device designed to operate in areas without defined pedestrian routes, but that is not a wheelchair within the meaning of this section. This definition does not apply to Federal wilderness areas; wheelchairs in such areas are defined in section 508(c)(2) of the ADA, 42 U.S.C. 12207(c)(2).

Place of public accommodation means a facility operated by a private entity whose operations affect commerce and fall within at least one of the following categories—

(1) Place of lodging, except for an establishment located within a facility that contains not more than five rooms for rent or hire and that actually is occupied by the proprietor of the establishment as the residence of the proprietor. For purposes of this part, a facility is a ''place of lodging'' if it is—

(i) An inn, hotel, or motel; or

(ii) A facility that—

(A) Provides guest rooms for sleeping for stays that primarily are short-term in nature (generally 30 days or less) where the occupant does not have the right to return to a specific room or unit after the conclusion of his or her stay; and

(B) Provides guest rooms under conditions and with amenities similar to a hotel, motel, or inn, including the following—

(*1*) On- or off-site management and reservations service;

(*2*) Rooms available on a walk-up or call-in basis;

(*3*) Availability of housekeeping or linen service; and

(*4*) Acceptance of reservations for a guest room type without guaranteeing a particular unit or room until check-in, and without a prior lease or security deposit.

(2) A restaurant, bar, or other establishment serving food or drink;

(3) A motion picture house, theater, concert hall, stadium, or other place of exhibition or entertainment;

(4) An auditorium, convention center, lecture hall, or other place of public gathering;

(5) A bakery, grocery store, clothing store, hardware store, shopping center, or other sales or rental establishment;

(6) A laundromat, dry-cleaner, bank, barber shop, beauty shop, travel service, shoe repair service, funeral parlor, gas station, office of an accountant or lawyer, pharmacy, insurance office, professional office of a health care provider, hospital, or other service establishment;

(7) A terminal, depot, or other station used for specified public transportation;

(8) A museum, library, gallery, or other place of public display or collection;

(9) A park, zoo, amusement park, or other place of recreation;

(10) A nursery, elementary, secondary, undergraduate, or postgraduate private school, or other place of education;

(11) A day care center, senior citizen center, homeless shelter, food bank, adoption agency, or other social service center establishment; and

(12) A gymnasium, health spa, bowling alley, golf course, or other place of exercise or recreation.

Private club means a private club or establishment exempted from coverage under title II of the Civil Rights Act of 1964 (42 U.S.C. 2000a(e)).

Private entity means a person or entity other than a public entity.

Public accommodation means a private entity that owns, leases (or leases to), or operates a place of public accommodation.

Public entity means—

(1) Any State or local government;

(2) Any department, agency, special purpose district, or other instrumentality of a State or States or local government; and

(3) The National Railroad Passenger Corporation, and any commuter authority (as defined in section 103(8) of the Rail Passenger Service Act). (45 U.S.C. 541)

Qualified interpreter means an interpreter who, via a video remote interpreting (VRI) service or an on-site appearance, is able to interpret effectively, accurately, and impartially, both receptively and expressively, using any necessary specialized vocabulary. Qualified interpreters include, for example, sign language interpreters, oral transliterators, and cued-language transliterators.

Qualified reader means a person who is able to read effectively, accurately, and impartially using any necessary specialized vocabulary.

Readily achievable means easily accomplishable and able to be carried out without much difficulty or expense. In determining whether an action is readily achievable factors to be considered include—

(1) The nature and cost of the action needed under this part;

(2) The overall financial resources of the site or sites involved in the action; the number of persons employed at the site; the effect on expenses and resources; legitimate safety requirements that are necessary for safe operation, including crime prevention measures; or the impact otherwise of the action upon the operation of the site;

(3) The geographic separateness, and the administrative or fiscal relationship of the site or sites in question to any parent corporation or entity;

(4) If applicable, the overall financial resources of any parent corporation or entity; the overall size of the parent corporation or entity with respect to the number of its employees; the number, type, and location of its facilities; and

(5) If applicable, the type of operation or operations of any parent corporation or entity, including the composition, structure, and functions of the workforce of the parent corporation or entity.

Religious entity means a religious organization, including a place of worship.

Service animal means any dog that is individually trained to do work or perform tasks for the benefit of an individual with a disability, including a physical, sensory, psychiatric, intellectual, or other mental disability. Other species of animals, whether wild or domestic, trained or untrained, are not service animals for the purposes of this definition. The work or tasks performed by a service animal must be directly related to the individual's disability. Examples of work or tasks include, but are not limited to, assisting individuals who are blind or have low vision with navigation and other tasks, alerting individuals who are deaf or hard of hearing to the presence of people or sounds, providing non-violent protection or rescue work, pulling a wheelchair, assisting an individual during a seizure, alerting individuals to the presence of allergens, retrieving items such as medicine or the telephone, providing physical support and assistance with balance and stability to individuals with mobility disabilities, and helping persons with psychiatric and neurological disabilities by preventing or interrupting impulsive or destructive behaviors. The crime deterrent effects of an animal's presence and the provision of emotional support, well-being, comfort, or companionship do not constitute work or tasks for the purposes of this definition.

Specified public transportation means transportation by bus, rail, or any other conveyance (other than by aircraft) that provides the general public with general or special service (including charter service) on a regular and continuing basis.

State means each of the several States, the District of Columbia, the Commonwealth of Puerto Rico, Guam, American Samoa, the Virgin Islands,

the Trust Territory of the Pacific Islands, and the Commonwealth of the Northern Mariana Islands.

Undue burden means significant difficulty or expense. In determining whether an action would result in an undue burden, factors to be considered include—

(1) The nature and cost of the action needed under this part;

(2) The overall financial resources of the site or sites involved in the action; the number of persons employed at the site; the effect on expenses and resources; legitimate safety requirements that are necessary for safe operation, including crime prevention measures; or the impact otherwise of the action upon the operation of the site;

(3) The geographic separateness, and the administrative or fiscal relationship of the site or sites in question to any parent corporation or entity;

(4) If applicable, the overall financial resources of any parent corporation or entity; the overall size of the parent corporation or entity with respect to the number of its employees; the number, type, and location of its facilities; and

(5) If applicable, the type of operation or operations of any parent corporation or entity, including the composition, structure, and functions of the workforce of the parent corporation or entity.

Video remote interpreting (VRI) service means an interpreting service that uses video conference technology over dedicated lines or wireless technology offering high-speed, wide-bandwidth video connection that delivers high-quality video images as provided in § 36.303(f).

Wheelchair means a manually-operated or power-driven device designed primarily for use by an individual with a mobility disability for the main purpose of indoor or of both indoor and outdoor locomotion. This definition does not apply to Federal wilderness areas; wheelchairs in such areas are defined in section 508(c)(2) of the ADA, 42 U.S.C. 12207(c)(2).

[Order No. 1513–91, 56 FR 35592, July 26, 1991, as amended by AG Order No. 3181–2010, 75 FR 56250, Sept. 15, 2010; 76 FR 13287, Mar. 11, 2011]

§§ 36.105–36.199 [Reserved]

Subpart B—General Requirements

§ 36.201 General.

(a) *Prohibition of discrimination.* No individual shall be discriminated against on the basis of disability in the full and equal enjoyment of the goods, services, facilities, privileges, advantages, or accommodations of any place of public accommodation by any private entity who owns, leases (or leases to), or operates a place of public accommodation.

(b) *Landlord and tenant responsibilities.* Both the landlord who owns the building that houses a place of public accommodation and the tenant who owns or operates the place of public accommodation are public accommodations subject to the requirements of this part. As between the parties, allocation of responsibility for complying with the obligations of this part may be determined by lease or other contract.

§ 36.202 Activities.

(a) *Denial of participation.* A public accommodation shall not subject an individual or class of individuals on the basis of a disability or disabilities of such individual or class, directly, or through contractual, licensing, or other arrangements, to a denial of the opportunity of the individual or class to participate in or benefit from the goods, services, facilities, privileges, advantages, or accommodations of a place of public accommodation.

(b) *Participation in unequal benefit.* A public accommodation shall not afford an individual or class of individuals, on the basis of a disability or disabilities of such individual or class, directly, or through contractual, licensing, or other arrangements, with the opportunity to participate in or benefit from a good, service, facility, privilege, advantage, or accommodation that is not equal to that afforded to other individuals.

(c) *Separate benefit.* A public accommodation shall not provide an individual or class of individuals, on the basis of a disability or disabilities of such individual or class, directly, or through contractual, licensing, or

other arrangements with a good, service, facility, privilege, advantage, or accommodation that is different or separate from that provided to other individuals, unless such action is necessary to provide the individual or class of individuals with a good, service, facility, privilege, advantage, or accommodation, or other opportunity that is as effective as that provided to others.

(d) *Individual or class of individuals.* For purposes of paragraphs (a) through (c) of this section, the term ''individual or class of individuals'' refers to the clients or customers of the public accommodation that enters into the contractual, licensing, or other arrangement.

§ 36.203 Integrated settings.

(a) *General.* A public accommodation shall afford goods, services, facilities, privileges, advantages, and accommodations to an individual with a disability in the most integrated setting appropriate to the needs of the individual.

(b) *Opportunity to participate.* Notwithstanding the existence of separate or different programs or activities provided in accordance with this subpart, a public accommodation shall not deny an individual with a disability an opportunity to participate in such programs or activities that are not separate or different.

(c) *Accommodations and services.* (1) Nothing in this part shall be construed to require an individual with a disability to accept an accommodation, aid, service, opportunity, or benefit available under this part that such individual chooses not to accept.

(2) Nothing in the Act or this part authorizes the representative or guardian of an individual with a disability to decline food, water, medical treatment, or medical services for that individual.

§ 36.204 Administrative methods.

A public accommodation shall not, directly or through contractual or other arrangements, utilize standards or criteria or methods of administration that have the effect of discriminating on the basis of disability, or that perpetuate the discrimination of others who are subject to common administrative control.

§ 36.205 Association.

A public accommodation shall not exclude or otherwise deny equal goods, services, facilities, privileges, advantages, accommodations, or other opportunities to an individual or entity because of the known disability of an individual with whom the individual or entity is known to have a relationship or association.

§ 36.206 Retaliation or coercion.

(a) No private or public entity shall discriminate against any individual because that individual has opposed any act or practice made unlawful by this part, or because that individual made a charge, testified, assisted, or participated in any manner in an investigation, proceeding, or hearing under the Act or this part.

(b) No private or public entity shall coerce, intimidate, threaten, or interfere with any individual in the exercise or enjoyment of, or on account of his or her having exercised or enjoyed, or on account of his or her having aided or encouraged any other individual in the exercise or enjoyment of, any right granted or protected by the Act or this part.

(c) Illustrations of conduct prohibited by this section include, but are not limited to:

(1) Coercing an individual to deny or limit the benefits, services, or advantages to which he or she is entitled under the Act or this part;

(2) Threatening, intimidating, or interfering with an individual with a disability who is seeking to obtain or use the goods, services, facilities, privileges, advantages, or accommodations of a public accommodation;

(3) Intimidating or threatening any person because that person is assisting or encouraging an individual or group entitled to claim the rights granted or protected by the Act or this part to exercise those rights; or

(4) Retaliating against any person because that person has participated in any investigation or action to enforce the Act or this part.

§ 36.207 Places of public accommodation located in private residences.

(a) When a place of public accommodation is located in a private residence, the portion of the residence used exclusively as a residence is not covered by this part, but that portion used exclusively in the operation of the place of public accommodation or that portion used both for the place of public accommodation and for residential purposes is covered by this part.

(b) The portion of the residence covered under paragraph (a) of this section extends to those elements used to enter the place of public accommodation, including the homeowner's front sidewalk, if any, the door or entryway, and hallways; and those portions of the residence, interior or exterior, available to or used by customers or clients, including restrooms.

§ 36.208 Direct threat.

(a) This part does not require a public accommodation to permit an individual to participate in or benefit from the goods, services, facilities, privileges, advantages and accommodations of that public accommodation when that individual poses a direct threat to the health or safety of others.

(b) In determining whether an individual poses a direct threat to the health or safety of others, a public accommodation must make an individualized assessment, based on reasonable judgment that relies on current medical knowledge or on the best available objective evidence, to ascertain: The nature, duration, and severity of the risk; the probability that the potential injury will actually occur; and whether reasonable modifications of policies, practices, or procedures or the provision of auxiliary aids or services will mitigate the risk.

[Order No. 1513–91, 56 FR 35592, July 26, 1991, as amended by AG Order No. 3181–2010, 75 FR 56251, Sept. 15, 2010]

§ 36.209 Illegal use of drugs.

(a) *General.* (1) Except as provided in paragraph (b) of this section, this part does not prohibit discrimination against an individual based on that individual's current illegal use of drugs.

(2) A public accommodation shall not discriminate on the basis of illegal use of drugs against an individual who is not engaging in current illegal use of drugs and who—

(i) Has successfully completed a supervised drug rehabilitation program or has otherwise been rehabilitated successfully;

(ii) Is participating in a supervised rehabilitation program; or

(iii) Is erroneously regarded as engaging in such use.

(b) *Health and drug rehabilitation services.* (1) A public accommodation shall not deny health services, or services provided in connection with drug rehabilitation, to an individual on the basis of that individual's current illegal use of drugs, if the individual is otherwise entitled to such services.

(2) A drug rehabilitation or treatment program may deny participation to individuals who engage in illegal use of drugs while they are in the program.

(c) *Drug testing.* (1) This part does not prohibit a public accommodation from adopting or administering reasonable policies or procedures, including but not limited to drug testing, designed to ensure that an individual who formerly engaged in the illegal use of drugs is not now engaging in current illegal use of drugs.

(2) Nothing in this paragraph (c) shall be construed to encourage, prohibit, restrict, or authorize the conducting of testing for the illegal use of drugs.

§ 36.210 Smoking.

This part does not preclude the prohibition of, or the imposition of restrictions on, smoking in places of public accommodation.

§ 36.211 Maintenance of accessible features.

(a) A public accommodation shall maintain in operable working condition those features of facilities and equipment that are required to be readily accessible to and usable by persons with disabilities by the Act or this part.

(b) This section does not prohibit isolated or temporary interruptions in service or access due to maintenance or repairs.

(c) If the 2010 Standards reduce the technical requirements or the number of required accessible elements below the number required by the 1991 Standards, the technical requirements or the number of accessible elements in a facility subject to this part may be reduced in accordance with the requirements of the 2010 Standards.

[Order No. 1513–91, 56 FR 35592, July 26, 1991, as amended by AG Order No. 3181–2010, 75 FR 56251, Sept. 15, 2010]

§ 36.212 Insurance.

(a) This part shall not be construed to prohibit or restrict—

(1) An insurer, hospital or medical service company, health maintenance organization, or any agent, or entity that administers benefit plans, or similar organizations from underwriting risks, classifying risks, or administering such risks that are based on or not inconsistent with State law; or

(2) A person or organization covered by this part from establishing, sponsoring, observing or administering the terms of a bona fide benefit plan that are based on underwriting risks, classifying risks, or administering such risks that are based on or not inconsistent with State law; or

(3) A person or organization covered by this part from establishing, sponsoring, observing or administering the terms of a bona fide benefit plan that is not subject to State laws that regulate insurance.

(b) Paragraphs (a) (1), (2), and (3) of this section shall not be used as a subterfuge to evade the purposes of the Act or this part.

(c) A public accommodation shall not refuse to serve an individual with a disability because its insurance company conditions coverage or rates on the absence of individuals with disabilities.

§ 36.213 Relationship of subpart B to subparts C and D of this part.

Subpart B of this part sets forth the general principles of nondiscrimination applicable to all entities subject to this part. Subparts C and D of this part provide guidance on the application of the statute to specific situations. The specific provisions, including the limitations on those provisions, control over the general provisions in circumstances where both specific and general provisions apply.

§§ 36.214–36.299 [Reserved]

Subpart C—Specific Requirements

§ 36.301 Eligibility criteria.

(a) *General.* A public accommodation shall not impose or apply eligibility criteria that screen out or tend to screen out an individual with a disability or any class of individuals with disabilities from fully and equally enjoying any goods, services, facilities, privileges, advantages, or accommodations, unless such criteria can be shown to be necessary for the provision of the goods, services, facilities, privileges, advantages, or accommodations being offered.

(b) *Safety.* A public accommodation may impose legitimate safety requirements that are necessary for safe operation. Safety requirements must be based on actual risks and not on mere speculation, stereotypes, or generalizations about individuals with disabilities.

(c) *Charges.* A public accommodation may not impose a surcharge on a particular individual with a disability or any group of individuals with disabilities to cover the costs of measures, such as the provision of auxiliary aids, barrier removal, alternatives to barrier removal, and reasonable modifications in policies, practices, or procedures, that are required to provide that individual or group with the nondiscriminatory treatment required by the Act or this part.

§ 36.302 Modifications in policies, practices, or procedures.

(a) *General.* A public accommodation shall make reasonable modifications in policies, practices, or procedures, when the modifications are necessary to afford goods, services, facilities, privileges, advantages, or accommodations to individuals with disabilities, unless the public accommodation can demonstrate that making the modifications would fundamentally alter the nature of the goods, services, facilities, privileges, advantages, or accommodations.

(b) *Specialties*—(1) *General*. A public accommodation may refer an individual with a disability to another public accommodation, if that individual is seeking, or requires, treatment or services outside of the referring public accommodation's area of specialization, and if, in the normal course of its operations, the referring public accommodation would make a similar referral for an individual without a disability who seeks or requires the same treatment or services.

(2) *Illustration—medical specialties*. A health care provider may refer an individual with a disability to another provider, if that individual is seeking, or requires, treatment or services outside of the referring provider's area of specialization, and if the referring provider would make a similar referral for an individual without a disability who seeks or requires the same treatment or services. A physician who specializes in treating only a particular condition cannot refuse to treat an individual with a disability for that condition, but is not required to treat the individual for a different condition.

(c) *Service animals*—(1) *General*. Generally, a public accommodation shall modify policies, practices, or procedures to permit the use of a service animal by an individual with a disability.

(2) *Exceptions*. A public accommodation may ask an individual with a disability to remove a service animal from the premises if:

(i) The animal is out of control and the animal's handler does not take effective action to control it; or

(ii) The animal is not housebroken.

(3) *If an animal is properly excluded*. If a public accommodation properly excludes a service animal under § 36.302(c)(2), it shall give the individual with a disability the opportunity to obtain goods, services, and accommodations without having the service animal on the premises.

(4) *Animal under handler's control*. A service animal shall be under the control of its handler. A service animal shall have a harness, leash, or other tether, unless either the handler is unable because of a disability to use a harness, leash, or other tether, or the use of a harness, leash, or other tether would interfere with the service animal's safe, effective performance of work or tasks, in which case the service animal must be otherwise under the handler's control (*e.g.*, voice control, signals, or other effective means).

(5) *Care or supervision*. A public accommodation is not responsible for the care or supervision of a service animal.

(6) *Inquiries*. A public accommodation shall not ask about the nature or extent of a person's disability, but may make two inquiries to determine whether an animal qualifies as a service animal. A public accommodation may ask if the animal is required because of a disability and what work or task the animal has been trained to perform. A public accommodation shall not require documentation, such as proof that the animal has been certified, trained, or licensed as a service animal. Generally, a public accommodation may not make these inquiries about a service animal when it is readily apparent that an animal is trained to do work or perform tasks for an individual with a disability (*e.g.*, the dog is observed guiding an individual who is blind or has low vision, pulling a person's wheelchair, or providing assistance with stability or balance to an individual with an observable mobility disability).

(7) *Access to areas of a public accommodation*. Individuals with disabilities shall be permitted to be accompanied by their service animals in all areas of a place of public accommodation where members of the public, program participants, clients, customers, patrons, or invitees, as relevant, are allowed to go.

(8) *Surcharges*. A public accommodation shall not ask or require an individual with a disability to pay a surcharge, even if people accompanied by pets are required to pay fees, or to comply with other requirements generally not applicable to people without pets. If a public accommodation normally charges individuals for the damage they cause, an individual with a disability may be charged for damage caused by his or her service animal.

(9) *Miniature horses*. (i) A public accommodation shall make reasonable modifications in policies, practices, or

procedures to permit the use of a miniature horse by an individual with a disability if the miniature horse has been individually trained to do work or perform tasks for the benefit of the individual with a disability.

(ii) *Assessment factors.* In determining whether reasonable modifications in policies, practices, or procedures can be made to allow a miniature horse into a specific facility, a public accommodation shall consider—

(A) The type, size, and weight of the miniature horse and whether the facility can accommodate these features;

(B) Whether the handler has sufficient control of the miniature horse;

(C) Whether the miniature horse is housebroken; and

(D) Whether the miniature horse's presence in a specific facility compromises legitimate safety requirements that are necessary for safe operation.

(iii) *Other requirements.* Sections 36.302(c)(3) through (c)(8), which apply to service animals, shall also apply to miniature horses.

(d) *Check-out aisles.* A store with check-out aisles shall ensure that an adequate number of accessible check-out aisles are kept open during store hours, or shall otherwise modify its policies and practices, in order to ensure that an equivalent level of convenient service is provided to individuals with disabilities as is provided to others. If only one check-out aisle is accessible, and it is generally used for express service, one way of providing equivalent service is to allow persons with mobility impairments to make all their purchases at that aisle.

(e)(1) *Reservations made by places of lodging.* A public accommodation that owns, leases (or leases to), or operates a place of lodging shall, with respect to reservations made by any means, including by telephone, in-person, or through a third party—

(i) Modify its policies, practices, or procedures to ensure that individuals with disabilities can make reservations for accessible guest rooms during the same hours and in the same manner as individuals who do not need accessible rooms;

(ii) Identify and describe accessible features in the hotels and guest rooms offered through its reservations service in enough detail to reasonably permit individuals with disabilities to assess independently whether a given hotel or guest room meets his or her accessibility needs;

(iii) Ensure that accessible guest rooms are held for use by individuals with disabilities until all other guest rooms of that type have been rented and the accessible room requested is the only remaining room of that type;

(iv) Reserve, upon request, accessible guest rooms or specific types of guest rooms and ensure that the guest rooms requested are blocked and removed from all reservations systems; and

(v) Guarantee that the specific accessible guest room reserved through its reservations service is held for the reserving customer, regardless of whether a specific room is held in response to reservations made by others.

(2) *Exception.* The requirements in paragraphs (iii), (iv), and (v) of this section do not apply to reservations for individual guest rooms or other units not owned or substantially controlled by the entity that owns, leases, or operates the overall facility.

(3) *Compliance date.* The requirements in this section will apply to reservations made on or after March 15, 2012.

(f) *Ticketing.* (1)(i) For the purposes of this section, ''accessible seating'' is defined as wheelchair spaces and companion seats that comply with sections 221 and 802 of the 2010 Standards along with any other seats required to be offered for sale to the individual with a disability pursuant to paragraph (4) of this section.

(ii) *Ticket sales.* A public accommodation that sells tickets for a single event or series of events shall modify its policies, practices, or procedures to ensure that individuals with disabilities have an equal opportunity to purchase tickets for accessible seating—

(A) During the same hours;

(B) During the same stages of ticket sales, including, but not limited to, pre-sales, promotions, lotteries, waitlists, and general sales;

(C) Through the same methods of distribution;

(D) In the same types and numbers of ticketing sales outlets, including telephone service, in-person ticket sales at

the facility, or third-party ticketing services, as other patrons; and

(E) Under the same terms and conditions as other tickets sold for the same event or series of events.

(2) *Identification of available accessible seating.* A public accommodation that sells or distributes tickets for a single event or series of events shall, upon inquiry—

(i) Inform individuals with disabilities, their companions, and third parties purchasing tickets for accessible seating on behalf of individuals with disabilities of the locations of all unsold or otherwise available accessible seating for any ticketed event or events at the facility;

(ii) Identify and describe the features of available accessible seating in enough detail to reasonably permit an individual with a disability to assess independently whether a given accessible seating location meets his or her accessibility needs; and

(iii) Provide materials, such as seating maps, plans, brochures, pricing charts, or other information, that identify accessible seating and information relevant thereto with the same text or visual representations as other seats, if such materials are provided to the general public.

(3) *Ticket prices.* The price of tickets for accessible seating for a single event or series of events shall not be set higher than the price for other tickets in the same seating section for the same event or series of events. Tickets for accessible seating must be made available at all price levels for every event or series of events. If tickets for accessible seating at a particular price level cannot be provided because barrier removal in an existing facility is not readily achievable, then the percentage of tickets for accessible seating that should have been available at that price level but for the barriers (determined by the ratio of the total number of tickets at that price level to the total number of tickets in the assembly area) shall be offered for purchase, at that price level, in a nearby or similar accessible location.

(4) *Purchasing multiple tickets.* (i) *General.* For each ticket for a wheelchair space purchased by an individual with a disability or a third-party purchasing such a ticket at his or her request, a public accommodation shall make available for purchase three additional tickets for seats in the same row that are contiguous with the wheelchair space, provided that at the time of purchase there are three such seats available. A public accommodation is not required to provide more than three contiguous seats for each wheelchair space. Such seats may include wheelchair spaces.

(ii) *Insufficient additional contiguous seats available.* If patrons are allowed to purchase at least four tickets, and there are fewer than three such additional contiguous seat tickets available for purchase, a public accommodation shall offer the next highest number of such seat tickets available for purchase and shall make up the difference by offering tickets for sale for seats that are as close as possible to the accessible seats.

(iii) *Sales limited to fewer than four tickets.* If a public accommodation limits sales of tickets to fewer than four seats per patron, then the public accommodation is only obligated to offer as many seats to patrons with disabilities, including the ticket for the wheelchair space, as it would offer to patrons without disabilities.

(iv) *Maximum number of tickets patrons may purchase exceeds four.* If patrons are allowed to purchase more than four tickets, a public accommodation shall allow patrons with disabilities to purchase up to the same number of tickets, including the ticket for the wheelchair space.

(v) *Group sales.* If a group includes one or more individuals who need to use accessible seating because of a mobility disability or because their disability requires the use of the accessible features that are provided in accessible seating, the group shall be placed in a seating area with accessible seating so that, if possible, the group can sit together. If it is necessary to divide the group, it should be divided so that the individuals in the group who use wheelchairs are not isolated from their group.

(5) *Hold and release of tickets for accessible seating.* (i) *Tickets for accessible seating may be released for sale in certain*

limited circumstances. A public accommodation may release unsold tickets for accessible seating for sale to individuals without disabilities for their own use for a single event or series of events only under the following circumstances—

(A) When all non-accessible tickets (excluding luxury boxes, club boxes, or suites) have been sold;

(B) When all non-accessible tickets in a designated seating area have been sold and the tickets for accessible seating are being released in the same designated area; or

(C) When all non-accessible tickets in a designated price category have been sold and the tickets for accessible seating are being released within the same designated price category.

(ii) *No requirement to release accessible tickets*. Nothing in this paragraph requires a facility to release tickets for accessible seating to individuals without disabilities for their own use.

(iii) *Release of series-of-events tickets on a series-of-events basis*. (A) *Series-of-events tickets sell-out when no ownership rights are attached*. When series-of-events tickets are sold out and a public accommodation releases and sells accessible seating to individuals without disabilities for a series of events, the public accommodation shall establish a process that prevents the automatic reassignment of the accessible seating to such ticket holders for future seasons, future years, or future series, so that individuals with disabilities who require the features of accessible seating and who become newly eligible to purchase tickets when these series-of-events tickets are available for purchase have an opportunity to do so.

(B) *Series-of-events tickets when ownership rights are attached*. When series-of-events tickets with an ownership right in accessible seating areas are forfeited or otherwise returned to a public accommodation, the public accommodation shall make reasonable modifications in its policies, practices, or procedures to afford individuals with mobility disabilities or individuals with disabilities that require the features of accessible seating an opportunity to purchase such tickets in accessible seating areas.

(6) *Ticket transfer*. Individuals with disabilities who hold tickets for accessible seating shall be permitted to transfer tickets to third parties under the same terms and conditions and to the same extent as other spectators holding the same type of tickets, whether they are for a single event or series of events.

(7) *Secondary ticket market*. (i) A public accommodation shall modify its policies, practices, or procedures to ensure that an individual with a disability may use a ticket acquired in the secondary ticket market under the same terms and conditions as other individuals who hold a ticket acquired in the secondary ticket market for the same event or series of events.

(ii) If an individual with a disability acquires a ticket or series of tickets to an inaccessible seat through the secondary market, a public accommodation shall make reasonable modifications to its policies, practices, or procedures to allow the individual to exchange his ticket for one to an accessible seat in a comparable location if accessible seating is vacant at the time the individual presents the ticket to the public accommodation.

(8) *Prevention of fraud in purchase of tickets for accessible seating*. A public accommodation may not require proof of disability, including, for example, a doctor's note, before selling tickets for accessible seating.

(i) *Single-event tickets*. For the sale of single-event tickets, it is permissible to inquire whether the individual purchasing the tickets for accessible seating has a mobility disability or a disability that requires the use of the accessible features that are provided in accessible seating, or is purchasing the tickets for an individual who has a mobility disability or a disability that requires the use of the accessible features that are provided in the accessible seating.

(ii) *Series-of-events tickets*. For series-of-events tickets, it is permissible to ask the individual purchasing the tickets for accessible seating to attest in writing that the accessible seating is for a person who has a mobility disability or a disability that requires the use of the accessible features that are provided in the accessible seating.

(iii) *Investigation of fraud.* A public accommodation may investigate the potential misuse of accessible seating where there is good cause to believe that such seating has been purchased fraudulently.

[Order No. 1513–91, 56 FR 35592, July 26, 1991, as amended by AG Order No. 3181–2010, 75 FR 56251, Sept. 15, 2010; 76 FR 13287, Mar. 11, 2011]

§ 36.303 Auxiliary aids and services.

(a) *General.* A public accommodation shall take those steps that may be necessary to ensure that no individual with a disability is excluded, denied services, segregated or otherwise treated differently than other individuals because of the absence of auxiliary aids and services, unless the public accommodation can demonstrate that taking those steps would fundamentally alter the nature of the goods, services, facilities, privileges, advantages, or accommodations being offered or would result in an undue burden, i.e., significant difficulty or expense.

(b) *Examples.* The term ''auxiliary aids and services'' includes—

(1) Qualified interpreters on-site or through video remote interpreting (VRI) services; notetakers; real-time computer-aided transcription services; written materials; exchange of written notes; telephone handset amplifiers; assistive listening devices; assistive listening systems; telephones compatible with hearing aids; closed caption decoders; open and closed captioning, including real-time captioning; voice, text, and video-based telecommunications products and systems, including text telephones (TTYs), videophones, and captioned telephones, or equally effective telecommunications devices; videotext displays; accessible electronic and information technology; or other effective methods of making aurally delivered information available to individuals who are deaf or hard of hearing;

(2) Qualified readers; taped texts; audio recordings; Brailled materials and displays; screen reader software; magnification software; optical readers; secondary auditory programs (SAP); large print materials; accessible electronic and information technology; or other effective methods of making visually delivered materials available to individuals who are blind or have low vision;

(3) Acquisition or modification of equipment or devices; and

(4) Other similar services and actions.

(c) *Effective communication.*

(1) A public accommodation shall furnish appropriate auxiliary aids and services where necessary to ensure effective communication with individuals with disabilities. This includes an obligation to provide effective communication to companions who are individuals with disabilities.

(i) For purposes of this section, ''companion'' means a family member, friend, or associate of an individual seeking access to, or participating in, the goods, services, facilities, privileges, advantages, or accommodations of a public accommodation, who, along with such individual, is an appropriate person with whom the public accommodation should communicate.

(ii) The type of auxiliary aid or service necessary to ensure effective communication will vary in accordance with the method of communication used by the individual; the nature, length, and complexity of the communication involved; and the context in which the communication is taking place. A public accommodation should consult with individuals with disabilities whenever possible to determine what type of auxiliary aid is needed to ensure effective communication, but the ultimate decision as to what measures to take rests with the public accommodation, provided that the method chosen results in effective communication. In order to be effective, auxiliary aids and services must be provided in accessible formats, in a timely manner, and in such a way as to protect the privacy and independence of the individual with a disability.

(2) A public accommodation shall not require an individual with a disability to bring another individual to interpret for him or her.

(3) A public accommodation shall not rely on an adult accompanying an individual with a disability to interpret or facilitate communication, except—

(i) In an emergency involving an imminent threat to the safety or welfare

of an individual or the public where there is no interpreter available; or

(ii) Where the individual with a disability specifically requests that the accompanying adult interpret or facilitate communication, the accompanying adult agrees to provide such assistance, and reliance on that adult for such assistance is appropriate under the circumstances.

(4) A public accommodation shall not rely on a minor child to interpret or facilitate communication, except in an emergency involving an imminent threat to the safety or welfare of an individual or the public where there is no interpreter available.

(d) *Telecommunications.* (1) When a public accommodation uses an automated-attendant system, including, but not limited to, voicemail and messaging, or an interactive voice response system, for receiving and directing incoming telephone calls, that system must provide effective real-time communication with individuals using auxiliary aids and services, including text telephones (TTYs) and all forms of FCC-approved telecommunications relay systems, including Internet-based relay systems.

(2) A public accommodation that offers a customer, client, patient, or participant the opportunity to make outgoing telephone calls using the public accommodation's equipment on more than an incidental convenience basis shall make available accessible public telephones, TTYs, or other telecommunications products and systems for use by an individual who is deaf or hard of hearing, or has a speech impairment.

(3) A public accommodation may use relay services in place of direct telephone communication for receiving or making telephone calls incident to its operations.

(4) A public accommodation shall respond to telephone calls from a telecommunications relay service established under title IV of the ADA in the same manner that it responds to other telephone calls.

(5) This part does not require a public accommodation to use a TTY for receiving or making telephone calls incident to its operations.

(e) *Closed caption decoders.* Places of lodging that provide televisions in five or more guest rooms and hospitals that provide televisions for patient use shall provide, upon request, a means for decoding captions for use by an individual with impaired hearing.

(f) *Video remote interpreting (VRI) services.* A public accommodation that chooses to provide qualified interpreters via VRI service shall ensure that it provides—

(1) Real-time, full-motion video and audio over a dedicated high-speed, wide-bandwidth video connection or wireless connection that delivers high-quality video images that do not produce lags, choppy, blurry, or grainy images, or irregular pauses in communication;

(2) A sharply delineated image that is large enough to display the interpreter's face, arms, hands, and fingers, and the participating individual's face, arms, hands, and fingers, regardless of his or her body position;

(3) A clear, audible transmission of voices; and

(4) Adequate training to users of the technology and other involved individuals so that they may quickly and efficiently set up and operate the VRI.

(g) *Alternatives.* If provision of a particular auxiliary aid or service by a public accommodation would result in a fundamental alteration in the nature of the goods, services, facilities, privileges, advantages, or accommodations being offered or in an undue burden, i.e., significant difficulty or expense, the public accommodation shall provide an alternative auxiliary aid or service, if one exists, that would not result in an alteration or such burden but would nevertheless ensure that, to the maximum extent possible, individuals with disabilities receive the goods, services, facilities, privileges, advantages, or accommodations offered by the public accommodation.

[Order No. 1513–91, 56 FR 35592, July 26, 1991, as amended by AG Order No. 3181–2010, 75 FR 56253, Sept. 15, 2010]

§ 36.304 Removal of barriers.

(a) *General.* A public accommodation shall remove architectural barriers in existing facilities, including communication barriers that are structural in

nature, where such removal is readily achievable, i.e., easily accomplishable and able to be carried out without much difficulty or expense.

(b) *Examples.* Examples of steps to remove barriers include, but are not limited to, the following actions—

(1) Installing ramps;

(2) Making curb cuts in sidewalks and entrances;

(3) Repositioning shelves;

(4) Rearranging tables, chairs, vending machines, display racks, and other furniture;

(5) Repositioning telephones;

(6) Adding raised markings on elevator control buttons;

(7) Installing flashing alarm lights;

(8) Widening doors;

(9) Installing offset hinges to widen doorways;

(10) Eliminating a turnstile or providing an alternative accessible path;

(11) Installing accessible door hardware;

(12) Installing grab bars in toilet stalls;

(13) Rearranging toilet partitions to increase maneuvering space;

(14) Insulating lavatory pipes under sinks to prevent burns;

(15) Installing a raised toilet seat;

(16) Installing a full-length bathroom mirror;

(17) Repositioning the paper towel dispenser in a bathroom;

(18) Creating designated accessible parking spaces;

(19) Installing an accessible paper cup dispenser at an existing inaccessible water fountain;

(20) Removing high pile, low density carpeting; or

(21) Installing vehicle hand controls.

(c) *Priorities.* A public accommodation is urged to take measures to comply with the barrier removal requirements of this section in accordance with the following order of priorities.

(1) First, a public accommodation should take measures to provide access to a place of public accommodation from public sidewalks, parking, or public transportation. These measures include, for example, installing an entrance ramp, widening entrances, and providing accessible parking spaces.

(2) Second, a public accommodation should take measures to provide access to those areas of a place of public accommodation where goods and services are made available to the public. These measures include, for example, adjusting the layout of display racks, rearranging tables, providing Brailled and raised character signage, widening doors, providing visual alarms, and installing ramps.

(3) Third, a public accommodation should take measures to provide access to restroom facilities. These measures include, for example, removal of obstructing furniture or vending machines, widening of doors, installation of ramps, providing accessible signage, widening of toilet stalls, and installation of grab bars.

(4) Fourth, a public accommodation should take any other measures necessary to provide access to the goods, services, facilities, privileges, advantages, or accommodations of a place of public accommodation.

(d) *Relationship to alterations requirements of subpart D of this part.* (1) Except as provided in paragraph (d)(3) of this section, measures taken to comply with the barrier removal requirements of this section shall comply with the applicable requirements for alterations in § 36.402 and §§ 36.404 through 36.406 of this part for the element being altered. The path of travel requirements of § 36.403 shall not apply to measures taken solely to comply with the barrier removal requirements of this section.

(d)(2)(i) *Safe harbor.* Elements that have not been altered in existing facilities on or after March 15, 2012 and that comply with the corresponding technical and scoping specifications for those elements in the 1991 Standards are not required to be modified in order to comply with the requirements set forth in the 2010 Standards.

(ii)(A) Before March 15, 2012, elements in existing facilities that do not comply with the corresponding technical and scoping specifications for those elements in the 1991 Standards must be modified to the extent readily achievable to comply with either the 1991 Standards or the 2010 Standards. Noncomplying newly constructed and altered elements may also be subject to the requirements of § 36.406(a)(5).

(B) On or after March 15, 2012, elements in existing facilities that do not

comply with the corresponding technical and scoping specifications for those elements in the 1991 Standards must be modified to the extent readily achievable to comply with the requirements set forth in the 2010 Standards. Noncomplying newly constructed and altered elements may also be subject to the requirements of § 36.406(a)(5).

(iii) The safe harbor provided in § 36.304(d)(2)(i) does not apply to those elements in existing facilities that are subject to supplemental requirements (*i.e.*, elements for which there are neither technical nor scoping specifications in the 1991 Standards), and therefore those elements must be modified to the extent readily achievable to comply with the 2010 Standards. Noncomplying newly constructed and altered elements may also be subject to the requirements of § 36.406(a)(5). Elements in the 2010 Standards not eligible for the element-by-element safe harbor are identified as follows—

(A) *Residential facilities and dwelling units*, sections 233 and 809.

(B) *Amusement rides*, sections 234 and 1002; 206.2.9; 216.12.

(C) *Recreational boating facilities*, sections 235 and 1003; 206.2.10.

(D) *Exercise machines and equipment*, sections 236 and 1004; 206.2.13.

(E) *Fishing piers and platforms*, sections 237 and 1005; 206.2.14.

(F) *Golf facilities*, sections 238 and 1006; 206.2.15.

(G) *Miniature golf facilities*, sections 239 and 1007; 206.2.16.

(H) *Play areas*, sections 240 and 1008; 206.2.17.

(I) *Saunas and steam rooms*, sections 241 and 612.

(J) *Swimming pools, wading pools, and spas*, sections 242 and 1009.

(K) *Shooting facilities with firing positions*, sections 243 and 1010.

(L) *Miscellaneous*.

(*1*) Team or player seating, section 221.2.1.4.

(*2*) Accessible route to bowling lanes, section 206.2.11.

(*3*) Accessible route in court sports facilities, section 206.2.12.

(3) If, as a result of compliance with the alterations requirements specified in paragraph (d)(1) and (d)(2) of this section, the measures required to remove a barrier would not be readily achievable, a public accommodation may take other readily achievable measures to remove the barrier that do not fully comply with the specified requirements. Such measures include, for example, providing a ramp with a steeper slope or widening a doorway to a narrower width than that mandated by the alterations requirements. No measure shall be taken, however, that poses a significant risk to the health or safety of individuals with disabilities or others.

APPENDIX TO § 36.304(d)

COMPLIANCE DATES AND APPLICABLE STANDARDS FOR BARRIER REMOVAL AND SAFE HARBOR

Date	Requirement	Applicable standards
Before March 15, 2012 ...	Elements that do not comply with the requirements for those elements in the 1991 Standards must be modified to the extent readily achievable. Note: Noncomplying newly constructed and altered elements may also be subject to the requirements of § 36.406(a)(5).	1991 Standards or 2010 Standards.
On or after March 15, 2012.	Elements that do not comply with the requirements for those elements in the 1991 Standards or that do not comply with the supplemental requirements (*i.e.,* elements for which there are neither technical nor scoping specifications in the 1991 Standards) must be modified to the extent readily achievable. Note: Noncomplying newly constructed and altered elements may also be subject to the requirements of § 36.406(a)(5).	2010 Standards.
Elements not altered after March 15, 2012.	Elements that comply with the requirements for those elements in the 1991 Standards do not need to be modified.	Safe Harbor.

(e) *Portable ramps*. Portable ramps should be used to comply with this section only when installation of a permanent ramp is not readily achievable. In order to avoid any significant risk to the health or safety of individuals with

disabilities or others in using portable ramps, due consideration shall be given to safety features such as nonslip surfaces, railings, anchoring, and strength of materials.

(f) *Selling or serving space*. The rearrangement of temporary or movable structures, such as furniture, equipment, and display racks is not readily achievable to the extent that it results in a significant loss of selling or serving space.

(g) *Limitation on barrier removal obligations*. (1) The requirements for barrier removal under § 36.304 shall not be interpreted to exceed the standards for alterations in subpart D of this part.

(2) To the extent that relevant standards for alterations are not provided in subpart D of this part, then the requirements of § 36.304 shall not be interpreted to exceed the standards for new construction in subpart D of this part.

(3) This section does not apply to rolling stock and other conveyances to the extent that § 36.310 applies to rolling stock and other conveyances.

(4) This requirement does not apply to guest rooms in existing facilities that are places of lodging where the guest rooms are not owned by the entity that owns, leases, or operates the overall facility and the physical features of the guest room interiors are controlled by their individual owners.

[Order No. 1513–91, 56 FR 35592, July 26, 1991, as amended by AG Order No. 3181–2010, 75 FR 56254, Sept. 15, 2010]

§ 36.305 Alternatives to barrier removal.

(a) *General*. Where a public accommodation can demonstrate that barrier removal is not readily achievable, the public accommodation shall not fail to make its goods, services, facilities, privileges, advantages, or accommodations available through alternative methods, if those methods are readily achievable.

(b) *Examples*. Examples of alternatives to barrier removal include, but are not limited to, the following actions—

(1) Providing curb service or home delivery;

(2) Retrieving merchandise from inaccessible shelves or racks;

(3) Relocating activities to accessible locations;

(c) *Multiscreen cinemas*. If it is not readily achievable to remove barriers to provide access by persons with mobility impairments to all of the theaters of a multiscreen cinema, the cinema shall establish a film rotation schedule that provides reasonable access for individuals who use wheelchairs to all films. Reasonable notice shall be provided to the public as to the location and time of accessible showings.

§ 36.306 Personal devices and services.

This part does not require a public accommodation to provide its customers, clients, or participants with personal devices, such as wheelchairs; individually prescribed devices, such as prescription eyeglasses or hearing aids; or services of a personal nature including assistance in eating, toileting, or dressing.

§ 36.307 Accessible or special goods.

(a) This part does not require a public accommodation to alter its inventory to include accessible or special goods that are designed for, or facilitate use by, individuals with disabilities.

(b) A public accommodation shall order accessible or special goods at the request of an individual with disabilities, if, in the normal course of its operation, it makes special orders on request for unstocked goods, and if the accessible or special goods can be obtained from a supplier with whom the public accommodation customarily does business.

(c) Examples of accessible or special goods include items such as Brailled versions of books, books on audio cassettes, closed-captioned video tapes, special sizes or lines of clothing, and special foods to meet particular dietary needs.

§ 36.308 Seating in assembly areas.

A public accommodation shall ensure that wheelchair spaces and companion seats are provided in each specialty seating area that provides spectators with distinct services or amenities that generally are not available to other

spectators. If it is not readily achievable for a public accommodation to place wheelchair spaces and companion seats in each such specialty seating area, it shall provide those services or amenities to individuals with disabilities and their companions at other designated accessible locations at no additional cost. The number of wheelchair spaces and companion seats provided in specialty seating areas shall be included in, rather than in addition to, wheelchair space requirements set forth in table 221.2.1.1 in the 2010 Standards.

[AG Order No. 3181–2010, 75 FR 56255, Sept. 15, 2010]

§ 36.309 Examinations and courses.

(a) *General.* Any private entity that offers examinations or courses related to applications, licensing, certification, or credentialing for secondary or postsecondary education, professional, or trade purposes shall offer such examinations or courses in a place and manner accessible to persons with disabilities or offer alternative accessible arrangements for such individuals.

(b) *Examinations.* (1) Any private entity offering an examination covered by this section must assure that—

(i) The examination is selected and administered so as to best ensure that, when the examination is administered to an individual with a disability that impairs sensory, manual, or speaking skills, the examination results accurately reflect the individual's aptitude or achievement level or whatever other factor the examination purports to measure, rather than reflecting the individual's impaired sensory, manual, or speaking skills (except where those skills are the factors that the examination purports to measure);

(ii) An examination that is designed for individuals with impaired sensory, manual, or speaking skills is offered at equally convenient locations, as often, and in as timely a manner as are other examinations; and

(iii) The examination is administered in facilities that are accessible to individuals with disabilities or alternative accessible arrangements are made.

(iv) Any request for documentation, if such documentation is required, is reasonable and limited to the need for the modification, accommodation, or auxiliary aid or service requested.

(v) When considering requests for modifications, accommodations, or auxiliary aids or services, the entity gives considerable weight to documentation of past modifications, accommodations, or auxiliary aids or services received in similar testing situations, as well as such modifications, accommodations, or related aids and services provided in response to an Individualized Education Program (IEP) provided under the Individuals with Disabilities Education Act or a plan describing services provided pursuant to section 504 of the Rehabilitation Act of 1973, as amended (often referred to as a Section 504 Plan).

(vi) The entity responds in a timely manner to requests for modifications, accommodations, or aids to ensure equal opportunity for individuals with disabilities.

(2) Required modifications to an examination may include changes in the length of time permitted for completion of the examination and adaptation of the manner in which the examination is given.

(3) A private entity offering an examination covered by this section shall provide appropriate auxiliary aids for persons with impaired sensory, manual, or speaking skills, unless that private entity can demonstrate that offering a particular auxiliary aid would fundamentally alter the measurement of the skills or knowledge the examination is intended to test or would result in an undue burden. Auxiliary aids and services required by this section may include taped examinations, interpreters or other effective methods of making orally delivered materials available to individuals with hearing impairments, Brailled or large print examinations and answer sheets or qualified readers for individuals with visual impairments or learning disabilities, transcribers for individuals with manual impairments, and other similar services and actions.

(4) Alternative accessible arrangements may include, for example, provision of an examination at an individual's home with a proctor if accessible facilities or equipment are unavailable.

Alternative arrangements must provide comparable conditions to those provided for nondisabled individuals.

(c) *Courses.* (1) Any private entity that offers a course covered by this section must make such modifications to that course as are necessary to ensure that the place and manner in which the course is given are accessible to individuals with disabilities.

(2) Required modifications may include changes in the length of time permitted for the completion of the course, substitution of specific requirements, or adaptation of the manner in which the course is conducted or course materials are distributed.

(3) A private entity that offers a course covered by this section shall provide appropriate auxiliary aids and services for persons with impaired sensory, manual, or speaking skills, unless the private entity can demonstrate that offering a particular auxiliary aid or service would fundamentally alter the course or would result in an undue burden. Auxiliary aids and services required by this section may include taped texts, interpreters or other effective methods of making orally delivered materials available to individuals with hearing impairments, Brailled or large print texts or qualified readers for individuals with visual impairments and learning disabilities, classroom equipment adapted for use by individuals with manual impairments, and other similar services and actions.

(4) Courses must be administered in facilities that are accessible to individuals with disabilities or alternative accessible arrangements must be made.

(5) Alternative accessible arrangements may include, for example, provision of the course through videotape, cassettes, or prepared notes. Alternative arrangements must provide comparable conditions to those provided for nondisabled individuals.

[Order No. 1513–91, 56 FR 35592, July 26, 1991, as amended by AG Order No. 3181–2010, 75 FR 56255, Sept. 15, 2010]

§ 36.310 Transportation provided by public accommodations.

(a) *General.* (1) A public accommodation that provides transportation services, but that is not primarily engaged in the business of transporting people, is subject to the general and specific provisions in subparts B, C, and D of this part for its transportation operations, except as provided in this section.

(2) *Examples.* Transportation services subject to this section include, but are not limited to, shuttle services operated between transportation terminals and places of public accommodation, customer shuttle bus services operated by private companies and shopping centers, student transportation systems, and transportation provided within recreational facilities such as stadiums, zoos, amusement parks, and ski resorts.

(b) *Barrier removal.* A public accommodation subject to this section shall remove transportation barriers in existing vehicles and rail passenger cars used for transporting individuals (not including barriers that can only be removed through the retrofitting of vehicles or rail passenger cars by the installation of a hydraulic or other lift) where such removal is readily achievable.

(c) *Requirements for vehicles and systems.* A public accommodation subject to this section shall comply with the requirements pertaining to vehicles and transportation systems in the regulations issued by the Secretary of Transportation pursuant to section 306 of the Act.

§ 36.311 Mobility devices.

(a) *Use of wheelchairs and manually-powered mobility aids.* A public accommodation shall permit individuals with mobility disabilities to use wheelchairs and manually-powered mobility aids, such as walkers, crutches, canes, braces, or other similar devices designed for use by individuals with mobility disabilities in any areas open to pedestrian use.

(b)(1) *Use of other power-driven mobility devices.* A public accommodation shall make reasonable modifications in its policies, practices, or procedures to permit the use of other power-driven mobility devices by individuals with mobility disabilities, unless the public accommodation can demonstrate that

the class of other power-driven mobility devices cannot be operated in accordance with legitimate safety requirements that the public accommodation has adopted pursuant to § 36.301(b).

(2) *Assessment factors*. In determining whether a particular other power-driven mobility device can be allowed in a specific facility as a reasonable modification under paragraph (b)(1) of this section, a public accommodation shall consider—

(i) The type, size, weight, dimensions, and speed of the device;

(ii) The facility's volume of pedestrian traffic (which may vary at different times of the day, week, month, or year);

(iii) The facility's design and operational characteristics (*e.g.*, whether its business is conducted indoors, its square footage, the density and placement of stationary devices, and the availability of storage for the device, if requested by the user);

(iv) Whether legitimate safety requirements can be established to permit the safe operation of the other power-driven mobility device in the specific facility; and

(v) Whether the use of the other power-driven mobility device creates a substantial risk of serious harm to the immediate environment or natural or cultural resources, or poses a conflict with Federal land management laws and regulations.

(c)(1) *Inquiry about disability*. A public accommodation shall not ask an individual using a wheelchair or other power-driven mobility device questions about the nature and extent of the individual's disability.

(2) *Inquiry into use of other power-driven mobility device*. A public accommodation may ask a person using an other power-driven mobility device to provide a credible assurance that the mobility device is required because of the person's disability. A public accommodation that permits the use of an other power-driven mobility device by an individual with a mobility disability shall accept the presentation of a valid, State-issued disability parking placard or card, or State-issued proof of disability, as a credible assurance that the use of the other power-driven mobility device is for the individual's mobility disability. In lieu of a valid, State-issued disability parking placard or card, or State-issued proof of disability, a public accommodation shall accept as a credible assurance a verbal representation, not contradicted by observable fact, that the other power-driven mobility device is being used for a mobility disability. A ''valid'' disability placard or card is one that is presented by the individual to whom it was issued and is otherwise in compliance with the State of issuance's requirements for disability placards or cards.

[AG Order No. 3181–2010, 75 FR 56255, Sept. 15, 2010]

§§ 36.312–36.399 [Reserved]

Subpart D—New Construction and Alterations

§ 36.401 New construction.

(a) *General*. (1) Except as provided in paragraphs (b) and (c) of this section, discrimination for purposes of this part includes a failure to design and construct facilities for first occupancy after January 26, 1993, that are readily accessible to and usable by individuals with disabilities.

(2) For purposes of this section, a facility is designed and constructed for first occupancy after January 26, 1993, only—

(i) If the last application for a building permit or permit extension for the facility is certified to be complete, by a State, County, or local government after January 26, 1992 (or, in those jurisdictions where the government does not certify completion of applications, if the last application for a building permit or permit extension for the facility is received by the State, County, or local government after January 26, 1992); and

(ii) If the first certificate of occupancy for the facility is issued after January 26, 1993.

(b) *Commercial facilities located in private residences*. (1) When a commercial facility is located in a private residence, the portion of the residence used exclusively as a residence is not covered by this subpart, but that portion used exclusively in the operation of the

commercial facility or that portion used both for the commercial facility and for residential purposes is covered by the new construction and alterations requirements of this subpart.

(2) The portion of the residence covered under paragraph (b)(1) of this section extends to those elements used to enter the commercial facility, including the homeowner's front sidewalk, if any, the door or entryway, and hallways; and those portions of the residence, interior or exterior, available to or used by employees or visitors of the commercial facility, including restrooms.

(c) *Exception for structural impracticability.* (1) Full compliance with the requirements of this section is not required where an entity can demonstrate that it is structurally impracticable to meet the requirements. Full compliance will be considered structurally impracticable only in those rare circumstances when the unique characteristics of terrain prevent the incorporation of accessibility features.

(2) If full compliance with this section would be structurally impracticable, compliance with this section is required to the extent that it is not structurally impracticable. In that case, any portion of the facility that can be made accessible shall be made accessible to the extent that it is not structurally impracticable.

(3) If providing accessibility in conformance with this section to individuals with certain disabilities (e.g., those who use wheelchairs) would be structurally impracticable, accessibility shall nonetheless be ensured to persons with other types of disabilities (e.g., those who use crutches or who have sight, hearing, or mental impairments) in accordance with this section.

(d) *Elevator exemption.* (1) For purposes of this paragraph (d)—

(i) *Professional office of a health care provider* means a location where a person or entity regulated by a State to provide professional services related to the physical or mental health of an individual makes such services available to the public. The facility housing the ''professional office of a health care provider'' only includes floor levels housing at least one health care provider, or any floor level designed or intended for use by at least one health care provider.

(ii) *Shopping center or shopping mall means*—

(A) A building housing five or more sales or rental establishments; or

(B) A series of buildings on a common site, either under common ownership or common control or developed either as one project or as a series of related projects, housing five or more sales or rental establishments. For purposes of this section, places of public accommodation of the types listed in paragraph (5) of the definition of ''place of public accommodation'' in section § 36.104 are considered sales or rental establishments. The facility housing a ''shopping center or shopping mall'' only includes floor levels housing at least one sales or rental establishment, or any floor level designed or intended for use by at least one sales or rental establishment.

(2) This section does not require the installation of an elevator in a facility that is less than three stories or has less than 3000 square feet per story, except with respect to any facility that houses one or more of the following:

(i) A shopping center or shopping mall, or a professional office of a health care provider.

(ii) A terminal, depot, or other station used for specified public transportation, or an airport passenger terminal. In such a facility, any area housing passenger services, including boarding and debarking, loading and unloading, baggage claim, dining facilities, and other common areas open to the public, must be on an accessible route from an accessible entrance.

(3) The elevator exemption set forth in this paragraph (d) does not obviate or limit, in any way the obligation to comply with the other accessibility requirements established in paragraph (a) of this section. For example, in a facility that houses a shopping center or shopping mall, or a professional office of a health care provider, the floors that are above or below an accessible ground floor and that do not house sales or rental establishments or a professional office of a health care provider, must meet the requirements of this section but for the elevator.

§ 36.402 Alterations.

(a) *General.* (1) Any alteration to a place of public accommodation or a commercial facility, after January 26, 1992, shall be made so as to ensure that, to the maximum extent feasible, the altered portions of the facility are readily accessible to and usable by individuals with disabilities, including individuals who use wheelchairs.

(2) An alteration is deemed to be undertaken after January 26, 1992, if the physical alteration of the property begins after that date.

(b) *Alteration.* For the purposes of this part, an alteration is a change to a place of public accommodation or a commercial facility that affects or could affect the usability of the building or facility or any part thereof.

(1) Alterations include, but are not limited to, remodeling, renovation, rehabilitation, reconstruction, historic restoration, changes or rearrangement in structural parts or elements, and changes or rearrangement in the plan configuration of walls and full-height partitions. Normal maintenance, reroofing, painting or wallpapering, asbestos removal, or changes to mechanical and electrical systems are not alterations unless they affect the usability of the building or facility.

(2) If existing elements, spaces, or common areas are altered, then each such altered element, space, or area shall comply with the applicable provisions of appendix A to this part.

(c) *To the maximum extent feasible.* The phrase ''to the maximum extent feasible,'' as used in this section, applies to the occasional case where the nature of an existing facility makes it virtually impossible to comply fully with applicable accessibility standards through a planned alteration. In these circumstances, the alteration shall provide the maximum physical accessibility feasible. Any altered features of the facility that can be made accessible shall be made accessible. If providing accessibility in conformance with this section to individuals with certain disabilities (e.g., those who use wheelchairs) would not be feasible, the facility shall be made accessible to persons with other types of disabilities (e.g., those who use crutches, those who have impaired vision or hearing, or those who have other impairments).

§ 36.403 Alterations: Path of travel.

(a) *General.* (1) An alteration that affects or could affect the usability of or access to an area of a facility that contains a primary function shall be made so as to ensure that, to the maximum extent feasible, the path of travel to the altered area and the restrooms, telephones, and drinking fountains serving the altered area, are readily accessible to and usable by individuals with disabilities, including individuals who use wheelchairs, unless the cost and scope of such alterations is disproportionate to the cost of the overall alteration.

(2) If a private entity has constructed or altered required elements of a path of travel at a place of public accommodation or commercial facility in accordance with the specifications in the 1991 Standards, the private entity is not required to retrofit such elements to reflect the incremental changes in the 2010 Standards solely because of an alteration to a primary function area served by that path of travel.

(b) *Primary function.* A ''primary function'' is a major activity for which the facility is intended. Areas that contain a primary function include, but are not limited to, the customer services lobby of a bank, the dining area of a cafeteria, the meeting rooms in a conference center, as well as offices and other work areas in which the activities of the public accommodation or other private entity using the facility are carried out. Mechanical rooms, boiler rooms, supply storage rooms, employee lounges or locker rooms, janitorial closets, entrances, corridors, and restrooms are not areas containing a primary function.

(c) *Alterations to an area containing a primary function.* (1) Alterations that affect the usability of or access to an area containing a primary function include, but are not limited to—

(i) Remodeling merchandise display areas or employee work areas in a department store;

(ii) Replacing an inaccessible floor surface in the customer service or employee work areas of a bank;

(iii) Redesigning the assembly line area of a factory; or

(iv) Installing a computer center in an accounting firm.

(2) For the purposes of this section, alterations to windows, hardware, controls, electrical outlets, and signage shall not be deemed to be alterations that affect the usability of or access to an area containing a primary function.

(d) *Landlord/tenant:* If a tenant is making alterations as defined in § 36.402 that would trigger the requirements of this section, those alterations by the tenant in areas that only the tenant occupies do not trigger a path of travel obligation upon the landlord with respect to areas of the facility under the landlord's authority, if those areas are not otherwise being altered.

(e) *Path of travel.* (1) A ''path of travel'' includes a continuous, unobstructed way of pedestrian passage by means of which the altered area may be approached, entered, and exited, and which connects the altered area with an exterior approach (including sidewalks, streets, and parking areas), an entrance to the facility, and other parts of the facility.

(2) An accessible path of travel may consist of walks and sidewalks, curb ramps and other interior or exterior pedestrian ramps; clear floor paths through lobbies, corridors, rooms, and other improved areas; parking access aisles; elevators and lifts; or a combination of these elements.

(3) For the purposes of this part, the term ''path of travel'' also includes the restrooms, telephones, and drinking fountains serving the altered area.

(f) *Disproportionality.* (1) Alterations made to provide an accessible path of travel to the altered area will be deemed disproportionate to the overall alteration when the cost exceeds 20% of the cost of the alteration to the primary function area.

(2) Costs that may be counted as expenditures required to provide an accessible path of travel may include:

(i) Costs associated with providing an accessible entrance and an accessible route to the altered area, for example, the cost of widening doorways or installing ramps;

(ii) Costs associated with making restrooms accessible, such as installing grab bars, enlarging toilet stalls, insulating pipes, or installing accessible faucet controls;

(iii) Costs associated with providing accessible telephones, such a relocating the telephone to an accessible height, installing amplification devices, or installing a text telephone (TTY);

(iv) Costs associated with relocating an inaccessible drinking fountain.

(g) *Duty to provide accessible features in the event of disproportionality.* (1) When the cost of alterations necessary to make the path of travel to the altered area fully accessible is disproportionate to the cost of the overall alteration, the path of travel shall be made accessible to the extent that it can be made accessible without incurring disproportionate costs.

(2) In choosing which accessible elements to provide, priority should be given to those elements that will provide the greatest access, in the following order:

(i) An accessible entrance;

(ii) An accessible route to the altered area;

(iii) At least one accessible restroom for each sex or a single unisex restroom;

(iv) Accessible telephones;

(v) Accessible drinking fountains; and

(vi) When possible, additional accessible elements such as parking, storage, and alarms.

(h) *Series of smaller alterations.* (1) The obligation to provide an accessible path of travel may not be evaded by performing a series of small alterations to the area served by a single path of travel if those alterations could have been performed as a single undertaking.

(2)(i) If an area containing a primary function has been altered without providing an accessible path of travel to that area, and subsequent alterations of that area, or a different area on the same path of travel, are undertaken within three years of the original alteration, the total cost of alterations to the primary function areas on that path of travel during the preceding three year period shall be considered in

determining whether the cost of making that path of travel accessible is disproportionate.

(ii) Only alterations undertaken after January 26, 1992, shall be considered in determining if the cost of providing an accessible path of travel is disproportionate to the overall cost of the alterations.

[Order No. 1513–91, 56 FR 35592, July 26, 1991, as amended by AG Order No. 3181–2010, 75 FR 56256, Sept. 15, 2010]

§ 36.404 Alterations: Elevator exemption.

(a) This section does not require the installation of an elevator in an altered facility that is less than three stories or has less than 3,000 square feet per story, except with respect to any facility that houses a shopping center, a shopping mall, the professional office of a health care provider, a terminal, depot, or other station used for specified public transportation, or an airport passenger terminal.

(1) For the purposes of this section, *professional office of a health care provider* means a location where a person or entity regulated by a State to provide professional services related to the physical or mental health of an individual makes such services available to the public. The facility that houses a *professional office of a health care provider* only includes floor levels housing by at least one health care provider, or any floor level designed or intended for use by at least one health care provider.

(2) For the purposes of this section, *shopping center or shopping mall* means—

(i) A building housing five or more sales or rental establishments; or

(ii) A series of buildings on a common site, connected by a common pedestrian access route above or below the ground floor, that is either under common ownership or common control or developed either as one project or as a series of related projects, housing five or more sales or rental establishments. For purposes of this section, places of public accommodation of the types listed in paragraph (5) of the definition of *place of public accommodation* in § 36.104 are considered sales or rental establishments. The facility housing a *shopping center or shopping mall* only includes floor levels housing at least one sales or rental establishment, or any floor level designed or intended for use by at least one sales or rental establishment.

(b) The exemption provided in paragraph (a) of this section does not obviate or limit in any way the obligation to comply with the other accessibility requirements established in this subpart. For example, alterations to floors above or below the accessible ground floor must be accessible regardless of whether the altered facility has an elevator.

§ 36.405 Alterations: Historic preservation.

(a) Alterations to buildings or facilities that are eligible for listing in the National Register of Historic Places under the National Historic Preservation Act, 16 U.S.C. 470 *et seq.*, or are designated as historic under State or local law, shall comply to the maximum extent feasible with this part.

(b) If it is determined that it is not feasible to provide physical access to an historic property that is a place of public accommodation in a manner that will not threaten or destroy the historic significance of the building or the facility, alternative methods of access shall be provided pursuant to the requirements of subpart C of this part.

[AG Order No. 3181–2010, 75 FR 56256, Sept. 15, 2010]

§ 36.406 Standards for new construction and alterations.

(a) *Accessibility standards and compliance date.* (1) New construction and alterations subject to §§ 36.401 or 36.402 shall comply with the 1991 Standards if the date when the last application for a building permit or permit extension is certified to be complete by a State, county, or local government (or, in those jurisdictions where the government does not certify completion of applications, if the date when the last application for a building permit or permit extension is received by the State, county, or local government) is before September 15, 2010, or if no permit is required, if the start of physical construction or alterations occurs before September 15, 2010.

(2) New construction and alterations subject to §§ 36.401 or 36.402 shall comply either with the 1991 Standards or with the 2010 Standards if the date when the last application for a building permit or permit extension is certified to be complete by a State, county, or local government (or, in those jurisdictions where the government does not certify completion of applications, if the date when the last application for a building permit or permit extension is received by the State, county, or local government) is on or after September 15, 2010 and before March 15, 2012, or if no permit is required, if the start of physical construction or alterations occurs on or after September 15, 2010 and before March 15, 2012.

(3) New construction and alterations subject to §§ 36.401 or 36.402 shall comply with the 2010 Standards if the date when the last application for a building permit or permit extension is certified to be complete by a State, county, or local government (or, in those jurisdictions where the government does not certify completion of applications, if the date when the last application for a building permit or permit extension is received by the State, county, or local government) is on or after March 15, 2012, or if no permit is required, if the start of physical construction or alterations occurs on or after March 15, 2012.

(4) For the purposes of this section, ''start of physical construction or alterations'' does not mean ceremonial groundbreaking or razing of structures prior to site preparation.

(5) *Noncomplying new construction and alterations*. (i) Newly constructed or altered facilities or elements covered by §§ 36.401 or 36.402 that were constructed or altered before March 15, 2012 and that do not comply with the 1991 Standards shall, before March 15, 2012, be made accessible in accordance with either the 1991 Standards or the 2010 Standards.

(ii) Newly constructed or altered facilities or elements covered by §§ 36.401 or 36.402 that were constructed or altered before March 15, 2012 and that do not comply with the 1991 Standards shall, on or after March 15, 2012, be made accessible in accordance with the 2010 Standards.

APPENDIX TO § 36.406(a)

Compliance dates for new construction and alterations	Applicable standards
On or after January 26, 1993 and before September 15, 2010.	1991 Standards.
On or after September 15, 2010 and before March 15, 2012.	1991 Standards or 2010 Standards.
On or after March 15, 2012	2010 Standards.

(b) *Scope of coverage*. The 1991 Standards and the 2010 Standards apply to fixed or built-in elements of buildings, structures, site improvements, and pedestrian routes or vehicular ways located on a site. Unless specifically stated otherwise, the advisory notes, appendix notes, and figures contained in the 1991 Standards and 2010 Standards explain or illustrate the requirements of the rule; they do not establish enforceable requirements.

(c) *Places of lodging*. Places of lodging subject to this part shall comply with the provisions of the 2010 Standards applicable to transient lodging, including, but not limited to, the requirements for transient lodging guest rooms in sections 224 and 806 of the 2010 Standards.

(1) *Guest rooms*. Guest rooms with mobility features in places of lodging subject to the transient lodging requirements of 2010 Standards shall be provided as follows—

(i) Facilities that are subject to the same permit application on a common site that each have 50 or fewer guest rooms may be combined for the purposes of determining the required number of accessible rooms and type of accessible bathing facility in accordance with table 224.2 to section 224.2 of the 2010 Standards.

(ii) Facilities with more than 50 guest rooms shall be treated separately for the purposes of determining the required number of accessible rooms and type of accessible bathing facility in accordance with table 224.2 to section 224.2 of the 2010 Standards.

(2) *Exception*. Alterations to guest rooms in places of lodging where the guest rooms are not owned or substantially controlled by the entity that owns, leases, or operates the overall facility and the physical features of the guest room interiors are controlled by

their individual owners are not required to comply with § 36.402 or the alterations requirements in section 224.1.1 of the 2010 Standards.

(3) *Facilities with residential dwelling units and transient lodging units.* Residential dwelling units that are designed and constructed for residential use exclusively are not subject to the transient lodging standards.

(d) *Social service center establishments.* Group homes, halfway houses, shelters, or similar social service center establishments that provide either temporary sleeping accommodations or residential dwelling units that are subject to this part shall comply with the provisions of the 2010 Standards applicable to residential facilities, including, but not limited to, the provisions in sections 233 and 809.

(1) In sleeping rooms with more than 25 beds covered by this part, a minimum of 5% of the beds shall have clear floor space complying with section 806.2.3 of the 2010 Standards.

(2) Facilities with more than 50 beds covered by this part that provide common use bathing facilities shall provide at least one roll-in shower with a seat that complies with the relevant provisions of section 608 of the 2010 Standards. Transfer-type showers are not permitted in lieu of a roll-in shower with a seat, and the exceptions in sections 608.3 and 608.4 for residential dwelling units are not permitted. When separate shower facilities are provided for men and for women, at least one roll-in shower shall be provided for each group.

(e) *Housing at a place of education.* Housing at a place of education that is subject to this part shall comply with the provisions of the 2010 Standards applicable to transient lodging, including, but not limited to, the requirements for transient lodging guest rooms in sections 224 and 806, subject to the following exceptions. For the purposes of the application of this section, the term ''sleeping room'' is intended to be used interchangeably with the term ''guest room'' as it is used in the transient lodging standards.

(1) Kitchens within housing units containing accessible sleeping rooms with mobility features (including suites and clustered sleeping rooms) or on floors containing accessible sleeping rooms with mobility features shall provide turning spaces that comply with section 809.2.2 of the 2010 Standards and kitchen work surfaces that comply with section 804.3 of the 2010 Standards.

(2) Multi-bedroom housing units containing accessible sleeping rooms with mobility features shall have an accessible route throughout the unit in accordance with section 809.2 of the 2010 Standards.

(3) Apartments or townhouse facilities that are provided by or on behalf of a place of education, which are leased on a year-round basis exclusively to graduate students or faculty and do not contain any public use or common use areas available for educational programming, are not subject to the transient lodging standards and shall comply with the requirements for residential facilities in sections 233 and 809 of the 2010 Standards.

(f) *Assembly areas.* Assembly areas that are subject to this part shall comply with the provisions of the 2010 Standards applicable to assembly areas, including, but not limited to, sections 221 and 802. In addition, assembly areas shall ensure that—

(1) In stadiums, arenas, and grandstands, wheelchair spaces and companion seats are dispersed to all levels that include seating served by an accessible route;

(2) In assembly areas that are required to horizontally disperse wheelchair spaces and companion seats by section 221.2.3.1 of the 2010 Standards and that have seating encircling, in whole or in part, a field of play or performance, wheelchair spaces and companion seats are dispersed around that field of play or performance area;

(3) Wheelchair spaces and companion seats are not located on (or obstructed by) temporary platforms or other movable structures, except that when an entire seating section is placed on temporary platforms or other movable structures in an area where fixed seating is not provided, in order to increase seating for an event, wheelchair spaces and companion seats may be placed in that section. When wheelchair spaces and companion seats are not required to accommodate persons eligible for

those spaces and seats, individual, removable seats may be placed in those spaces and seats;

(4) In stadium-style movie theaters, wheelchair spaces and companion seats are located on a riser or cross-aisle in the stadium section that satisfies at least one of the following criteria—

(i) It is located within the rear 60% of the seats provided in an auditorium; or

(ii) It is located within the area of an auditorium in which the vertical viewing angles (as measured to the top of the screen) are from the 40th to the 100th percentile of vertical viewing angles for all seats as ranked from the seats in the first row (1st percentile) to seats in the back row (100th percentile).

(g) *Medical care facilities.* Medical care facilities that are subject to this part shall comply with the provisions of the 2010 Standards applicable to medical care facilities, including, but not limited to, sections 223 and 805. In addition, medical care facilities that do not specialize in the treatment of conditions that affect mobility shall disperse the accessible patient bedrooms required by section 223.2.1 of the 2010 Standards in a manner that is proportionate by type of medical specialty.

[AG Order No. 3181–2010, 75 FR 56256, Sept. 15, 2010]

§§ 36.407–36.499 [Reserved]

Subpart E—Enforcement

§ 36.501 Private suits.

(a) *General.* Any person who is being subjected to discrimination on the basis of disability in violation of the Act or this part or who has reasonable grounds for believing that such person is about to be subjected to discrimination in violation of section 303 of the Act or subpart D of this part may institute a civil action for preventive relief, including an application for a permanent or temporary injunction, restraining order, or other order. Upon timely application, the court may, in its discretion, permit the Attorney General to intervene in the civil action if the Attorney General or his or her designee certifies that the case is of general public importance. Upon application by the complainant and in such circumstances as the court may deem just, the court may appoint an attorney for such complainant and may authorize the commencement of the civil action without the payment of fees, costs, or security. Nothing in this section shall require a person with a disability to engage in a futile gesture if the person has actual notice that a person or organization covered by title III of the Act or this part does not intend to comply with its provisions.

(b) *Injunctive relief.* In the case of violations of § 36.304, §§ 36.308, 36.310(b), 36.401, 36.402, 36.403, and 36.405 of this part, injunctive relief shall include an order to alter facilities to make such facilities readily accessible to and usable by individuals with disabilities to the extent required by the Act or this part. Where appropriate, injunctive relief shall also include requiring the provision of an auxiliary aid or service, modification of a policy, or provision of alternative methods, to the extent required by the Act or this part.

§ 36.502 Investigations and compliance reviews.

(a) The Attorney General shall investigate alleged violations of the Act or this part.

(b) Any individual who believes that he or she or a specific class of persons has been subjected to discrimination prohibited by the Act or this part may request the Department to institute an investigation.

(c) Where the Attorney General has reason to believe that there may be a violation of this part, he or she may initiate a compliance review.

§ 36.503 Suit by the Attorney General.

Following a compliance review or investigation under § 36.502, or at any other time in his or her discretion, the Attorney General may commence a civil action in any appropriate United States district court if the Attorney General has reasonable cause to believe that—

(a) Any person or group of persons is engaged in a pattern or practice of discrimination in violation of the Act or this part; or

(b) Any person or group of persons has been discriminated against in violation of the Act or this part and the

discrimination raises an issue of general public importance.

§ 36.504 Relief.

(a) *Authority of court.* In a civil action under § 36.503, the court—

(1) May grant any equitable relief that such court considers to be appropriate, including, to the extent required by the Act or this part—

(i) Granting temporary, preliminary, or permanent relief;

(ii) Providing an auxiliary aid or service, modification of policy, practice, or procedure, or alternative method; and

(iii) Making facilities readily accessible to and usable by individuals with disabilities;

(2) May award other relief as the court considers to be appropriate, including monetary damages to persons aggrieved when requested by the Attorney General; and

(3) May, to vindicate the public interest, assess a civil penalty against the entity in an amount

(i) Not exceeding $50,000 for a first violation occurring before September 29, 1999, and not exceeding $55,000 for a first violation occurring on or after September 29, 1999; and

(ii) Not exceeding $100,000 for any subsequent violation occurring before September 29, 1999, and not exceeding $110,000 for any subsequent violation occurring on or after September 29, 1999.

(b) *Single violation.* For purposes of paragraph (a) (3) of this section, in determining whether a first or subsequent violation has occurred, a determination in a single action, by judgment or settlement, that the covered entity has engaged in more than one discriminatory act shall be counted as a single violation.

(c) *Punitive damages.* For purposes of paragraph (a)(2) of this section, the terms ''monetary damages'' and ''such other relief'' do not include punitive damages.

(d) *Judicial consideration.* In a civil action under § 36.503, the court, when considering what amount of civil penalty, if any, is appropriate, shall give consideration to any good faith effort or attempt to comply with this part by the entity. In evaluating good faith, the court shall consider, among other factors it deems relevant, whether the entity could have reasonably anticipated the need for an appropriate type of auxiliary aid needed to accommodate the unique needs of a particular individual with a disability.

[Order No. 1513–91, 56 FR 35592, July 26, 1991, as amended by Order No. 2249–99, 64 FR 47103, Aug. 30, 1999]

§ 36.505 Attorneys fees.

In any action or administrative proceeding commenced pursuant to the Act or this part, the court or agency, in its discretion, may allow the prevailing party, other than the United States, a reasonable attorney's fee, including litigation expenses, and costs, and the United States shall be liable for the foregoing the same as a private individual.

§ 36.506 Alternative means of dispute resolution.

Where appropriate and to the extent authorized by law, the use of alternative means of dispute resolution, including settlement negotiations, conciliation, facilitation, mediation, factfinding, minitrials, and arbitration, is encouraged to resolve disputes arising under the Act and this part.

§ 36.507 Effect of unavailability of technical assistance.

A public accommodation or other private entity shall not be excused from compliance with the requirements of this part because of any failure to receive technical assistance, including any failure in the development or dissemination of any technical assistance manual authorized by the Act.

§ 36.508 Effective date.

(a) *General.* Except as otherwise provided in this section and in this part, this part shall become effective on January 26, 1992.

(b) *Civil actions.* Except for any civil action brought for a violation of section 303 of the Act, no civil action shall be brought for any act or omission described in section 302 of the Act that occurs—

(1) Before July 26, 1992, against businesses with 25 or fewer employees and gross receipts of $1,000,000 or less.

(2) Before January 26, 1993, against businesses with 10 or fewer employees and gross receipts of $500,000 or less.

(c) *Transportation services provided by public accommodations*. Newly purchased or leased vehicles required to be accessible by § 36.310 must be readily accessible to and usable by individuals with disabilities, including individuals who use wheelchairs, if the solicitation for the vehicle is made after August 25, 1990.

§§ 36.509–36.599 [Reserved]

Subpart F—Certification of State Laws or Local Building Codes

§ 36.601 Definitions.

Assistant Attorney General means the Assistant Attorney General for Civil Rights or his or her designee.

Certification of equivalency means a final certification that a code meets or exceeds the minimum requirements of title III of the Act for accessibility and usability of facilities covered by that title.

Code means a State law or local building code or similar ordinance, or part thereof, that establishes accessibility requirements.

Model code means a nationally recognized document developed by a private entity for use by State or local jurisdictions in developing codes as defined in this section. A model code is intended for incorporation by reference or adoption in whole or in part, with or without amendment, by State or local jurisdictions.

Preliminary determination of equivalency means a preliminary determination that a code appears to meet or exceed the minimum requirements of title III of the Act for accessibility and usability of facilities covered by that title.

Submitting official means the State or local official who—

(1) Has principal responsibility for administration of a code, or is authorized to submit a code on behalf of a jurisdiction; and

(2) Files a request for certification under this subpart.

§ 36.602 General rule.

On the application of a State or local government, the Assistant Attorney General may certify that a code meets or exceeds the minimum requirements of the Act for the accessibility and usability of places of public accommodation and commercial facilities under this part by issuing a certification of equivalency. At any enforcement proceeding under title III of the Act, such certification shall be rebuttable evidence that such State law or local ordinance does meet or exceed the minimum requirements of title III.

§ 36.603 Preliminary determination.

Upon receipt and review of all information relevant to a request filed by a submitting official for certification of a code, and after consultation with the Architectural and Transportation Barriers Compliance Board, the Assistant Attorney General shall make a preliminary determination of equivalency or a preliminary determination to deny certification.

[AG Order No. 3181–2010, 75 FR 56257, Sept. 15, 2010]

§ 36.604 Procedure following preliminary determination of equivalency.

(a) If the Assistant Attorney General makes a preliminary determination of equivalency under § 36.603, he or she shall inform the submitting official, in writing, of that preliminary determination. The Assistant Attorney General also shall—

(1) Publish a notice in the FEDERAL REGISTER that advises the public of the preliminary determination of equivalency with respect to the particular code, and invite interested persons and organizations, including individuals with disabilities, during a period of at least 60 days following publication of the notice, to file written comments relevant to whether a final certification of equivalency should be issued;

(2) After considering the information received in response to the notice described in paragraph (a) of this section, and after publishing a separate notice in the FEDERAL REGISTER, hold an informal hearing, in the State or local jurisdiction charged with administration and enforcement of the code, at

which interested individuals, including individuals with disabilities, are provided an opportunity to express their views with respect to the preliminary determination of equivalency; and

(b) The Assistant Attorney General, after consultation with the Architectural and Transportation Barriers Compliance Board and consideration of the materials and information submitted pursuant to this section, as well as information provided previously by the submitting official, shall issue either a certification of equivalency or a final determination to deny the request for certification. The Assistant Attorney General shall publish notice of the certification of equivalency or denial of certification in the FEDERAL REGISTER.

[Order No. 1513–91, 56 FR 35592, July 26, 1991, redesignated and amended by AG Order No. 3181–2010, 75 FR 56257, Sept. 15, 2010]

§ 36.605 Procedure following preliminary denial of certification.

(a) If the Assistant Attorney General makes a preliminary determination to deny certification of a code under § 36.603, he or she shall notify the submitting official of the determination. The notification may include specification of the manner in which the code could be amended in order to qualify for certification.

(b) The Assistant Attorney General shall allow the submitting official not less than 15 days to submit data, views, and arguments in opposition to the preliminary determination to deny certification. If the submitting official does not submit materials, the Assistant Attorney General shall not be required to take any further action. If the submitting official submits materials, the Assistant Attorney General shall evaluate those materials and any other relevant information. After evaluation of any newly submitted materials, the Assistant Attorney General shall make either a final denial of certification or a preliminary determination of equivalency.

[Order No. 1513–91, 56 FR 35592, July 26, 1991, redesignated and amended by AG Order No. 3181–2010, 75 FR 56258, Sept. 15, 2010]

§ 36.606 Effect of certification.

(a)(1) A certification shall be considered a certification of equivalency only with respect to those features or elements that are both covered by the certified code and addressed by the standards against which equivalency is measured.

(2) For example, if certain equipment is not covered by the code, the determination of equivalency cannot be used as evidence with respect to the question of whether equipment in a building built according to the code satisfies the Act's requirements with respect to such equipment. By the same token, certification would not be relevant to construction of a facility for children, if the regulations against which equivalency is measured do not address children's facilities.

(b) A certification of equivalency is effective only with respect to the particular edition of the code for which certification is granted. Any amendments or other changes to the code after the date of the certified edition are not considered part of the certification.

(c) A submitting official may reapply for certification of amendments or other changes to a code that has already received certification.

(d) When the standards of the Act against which a code is deemed equivalent are revised or amended substantially, a certification of equivalency issued under the preexisting standards is no longer effective, as of the date the revised standards take effect. However, construction in compliance with a certified code during the period when a certification of equivalency was effective shall be considered rebuttable evidence of compliance with the Standards then in effect as to those elements of buildings and facilities that comply with the certified code. A submitting official may reapply for certification pursuant to the Act's revised standards, and, to the extent possible, priority will be afforded the request in the review process.

[Order No. 1513–91, 56 FR 35592, July 26, 1991, redesignated and amended by AG Order No. 3181–2010, 75 FR 56258, Sept. 15, 2010]

§ 36.607 Guidance concerning model codes.

Upon application by an authorized representative of a private entity responsible for developing a model code, the Assistant Attorney General may review the relevant model code and issue guidance concerning whether and in what respects the model code is consistent with the minimum requirements of the Act for the accessibility and usability of places of public accommodation and commercial facilities under this part.

[Order No. 1513–91, 56 FR 35592, July 26, 1991, redesignated by AG Order No. 3181–2010, 75 FR 56258, Sept. 15, 2010]

APPENDIX A TO PART 36—GUIDANCE ON REVISIONS TO ADA REGULATION ON NONDISCRIMINATION ON THE BASIS OF DISABILITY BY PUBLIC ACCOMMODATIONS AND COMMERCIAL FACILITIES

NOTE: This appendix contains guidance providing a section-by-section analysis of the revisions to 28 CFR part 36 published on September 15, 2010.

SECTION-BY-SECTION ANALYSIS AND RESPONSE TO PUBLIC COMMENTS

This section provides a detailed description of the Department's changes to the title III regulation, the reasoning behind those changes, and responses to public comments received on these topics. The Section-by-Section Analysis follows the order of the title III regulation itself, except that if the Department has not changed a regulatory section, the unchanged section has not been mentioned.

SUBPART A—GENERAL

SECTION 36.104 DEFINITIONS

''1991 Standards'' and ''2004 ADAAG''

The Department has included in the final rule new definitions of both the ''1991 Standards'' and the ''2004 ADAAG.'' The term ''1991 Standards'' refers to the ADA Standards for Accessible Design, originally published on July 26, 1991, and republished as Appendix D to 28 CFR part 36. The term ''2004 ADAAG'' refers to ADA Chapter 1, ADA Chapter 2, and Chapters 3 through 10 of the Americans with Disabilities Act and the Architectural Barriers Act Accessibility Guidelines, which were issued by the Access Board on July 23, 2004, codified at 36 CFR 1191, app. B and D (2009), and which the Department has adopted in this final rule. These terms are included in the definitions section for ease of reference.

''2010 Standards''

The Department has added to the final rule a definition of the term ''2010 Standards.'' The term ''2010 Standards'' refers to the 2010 ADA Standards for Accessible Design, which consist of the 2004 ADAAG and the requirements contained in subpart D of 28 CFR part 36.

''Direct Threat''

The final rule moves the definition of direct threat from § 36.208(b) to the definitions section at § 36.104. This is an editorial change. Consequently, § 36.208(c) becomes § 36.208(b) in the final rule.

''Existing Facility''

The 1991 title III regulation provided definitions for ''new construction'' at § 36.401(a) and ''alterations'' at § 36.402(b). In contrast, the term ''existing facility'' was not explicitly defined, although it is used in the statute and regulations for titles II and III. *See, e.g.*, 42 U.S.C. 12182(b)(2)(A)(iv); 28 CFR 35.150. It has been the Department's view that newly constructed or altered facilities are also existing facilities subject to title III's continuing barrier removal obligation, and that view is made explicit in this rule.

The classification of facilities under the ADA is neither static nor mutually exclusive. Newly constructed or altered facilities are also existing facilities. A newly constructed facility remains subject to the accessibility standards in effect at the time of design and construction, with respect to those elements for which, at that time, there were applicable ADA Standards. That same facility, however, after construction, is *also* an existing facility, and subject to the public accommodation's continuing obligation to remove barriers where it is readily achievable to do so. The fact that the facility is also an existing facility does not relieve the public accommodation of its obligations under the new construction requirements of this part. Rather, it means that in addition to the new construction requirements, the public accommodation has a continuing obligation to remove barriers that arise, or are deemed barriers, only after construction. Such barriers include but are not limited to the elements that are first covered in the 2010 Standards, as that term is defined in § 36.104.

At some point, the same facility may undergo alterations, which are subject to the alterations requirements in effect at that time. This facility remains subject to its original new construction standards for elements and spaces not affected by the alterations; the facility is subject to the alterations requirements and standards in effect at the time of the alteration for the elements and spaces affected by the alteration;

and, throughout, the facility remains subject to the continuing barrier removal obligation.

The Department's enforcement of the ADA is premised on a broad understanding of ''existing facility.'' The ADA contemplates that as the Department's knowledge and understanding of accessibility advances and evolves, this knowledge will be incorporated into and result in increased accessibility in the built environment. Title III's barrier removal provisions strike the appropriate balance between ensuring that accessibility advances are reflected in the built environment and mitigating the costs of those advances to public accommodations. With adoption of the final rule, public accommodations engaged in barrier removal measures will now be guided by the 2010 Standards, defined in §36.104, and the safe harbor in §36.304(d)(2).

The NPRM included the following proposed definition of ''existing facility'': ''[A] facility that has been constructed and remains in existence on any given date.'' 73 FR 34508, 34552 (June 17, 2008). While the Department intended the proposed definition to provide clarity with respect to public accommodations' continuing obligation to remove barriers where it is readily achievable to do so, some commenters pointed out arguable ambiguity in the language and the potential for misapplication of the rule in practice.

The Department received a number of comments on this issue. The commenters urged the Department to clarify that all buildings remain subject to the standards in effect at the time of their construction, that is, that a facility designed and constructed for first occupancy between January 26, 1993, and the effective date of the final rule is still considered ''new construction'' and that alterations occurring between January 26, 1993, and the effective date of the final rule are still considered ''alterations.''

The final rule includes clarifying language to ensure that the Department's interpretation is accurately reflected. As established by this rule, existing facility means a facility in existence on any given date, without regard to whether the facility may also be considered newly constructed or altered under this part. Thus, this definition reflects the Department's longstanding interpretation that public accommodations have obligations in existing facilities that are independent of but may coexist with requirements imposed by new construction or alteration requirements in those same facilities.

''Housing at a Place of Education''

The Department has added a new definition to §36.104, ''housing at a place of education,'' to clarify the types of educational housing programs that are covered by this title. This section defines ''housing at a place of education'' as ''housing operated by or on behalf of an elementary, secondary, undergraduate, or postgraduate school, or other place of education, including dormitories, suites, apartments, or other places of residence.'' This definition does not apply to social service programs that combine residential housing with social services, such as a residential job training program.

''Other Power-Driven Mobility Device'' and ''Wheelchair''

Because relatively few individuals with disabilities were using nontraditional mobility devices in 1991, there was no pressing need for the 1991 title III regulation to define the terms ''wheelchair'' or ''other power-driven mobility device,'' to expound on what would constitute a reasonable modification in policies, practices, or procedures under §36.302, or to set forth within that section specific requirements for the accommodation of mobility devices. Since the issuance of the 1991 title III regulation, however, the choices of mobility devices available to individuals with disabilities have increased dramatically. The Department has received complaints about and has become aware of situations where individuals with mobility disabilities have utilized devices that are not designed primarily for use by an individual with a mobility disability, including the Segway® Personal Transporter (Segway® PT), golf cars, all-terrain vehicles (ATVs), and other locomotion devices.

The Department also has received questions from public accommodations and individuals with mobility disabilities concerning which mobility devices must be accommodated and under what circumstances. Indeed, there has been litigation concerning the legal obligations of covered entities to accommodate individuals with mobility disabilities who wish to use an electronic personal assistance mobility device (EPAMD), such as the Segway® PT, as a mobility device. The Department has participated in such litigation as amicus curiae. *See Ault* v. *Walt Disney World Co.*, No. 6:07–cv–1785–Orl–31KRS, 2009 WL 3242028 (M.D. Fla. Oct. 6, 2009). Much of the litigation has involved shopping malls where businesses have refused to allow persons with disabilities to use EPAMDs. *See, e.g., McElroy* v. *Simon Property Group*, No. 08–404 RDR, 2008 WL 4277716 (D. Kan. Sept. 15, 2008) (enjoining mall from prohibiting the use of a Segway® PT as a mobility device where an individual agrees to all of a mall's policies for use of the device, except indemnification); Shasta Clark, *Local Man Fighting Mall Over Right to Use Segway*, WATE 6 News, July 26, 2005, available at *http://www.wate.com/Global/story.asp?s=3643674* (last visited June 24, 2010).

In response to questions and complaints from individuals with disabilities and covered entities concerning which mobility devices must be accommodated and under what

circumstances, the Department began developing a framework to address the use of unique mobility devices, concerns about their safety, and the parameters for the circumstances under which these devices must be accommodated. As a result, the Department's NPRM proposed two new approaches to mobility devices. First, the Department proposed a two-tiered mobility device definition that defined the term ''wheelchair'' separately from ''other power-driven mobility device.'' Second, the Department proposed requirements to allow the use of devices in each definitional category. In §36.311(a), the NPRM proposed that wheelchairs and manually-powered mobility aids used by individuals with mobility disabilities shall be permitted in any areas open to pedestrian use. Section 36.311(b) of the NPRM proposed that a public accommodation ''shall make reasonable modifications in its policies, practices, and procedures to permit the use of other power-driven mobility devices by individuals with disabilities, unless the public accommodation can demonstrate that the use of the device is not reasonable or that its use will result in a fundamental alteration in the nature of the public accommodation's goods, services, facilities, privileges, advantages, or accommodations.'' 73 FR 34508, 34556 (June 17, 2008).

The Department sought public comment with regard to whether these steps would, in fact, achieve clarity on these issues. Toward this end, the Department's NPRM asked several questions relating to the definitions of ''wheelchair,'' ''other power-driven mobility device,'' and ''manually-powered mobility aids''; the best way to categorize different classes of mobility devices, the types of devices that should be included in each category; and the circumstances under which certain types of mobility devices must be accommodated or may be excluded pursuant to the policy adopted by the public accommodation.

Because the questions in the NPRM that concerned mobility devices and their accommodation were interrelated, many of the commenters' responses did not identify the specific question to which they were responding. Instead, commenters grouped the questions together and provided comments accordingly. Most commenters spoke to the issues addressed in the Department's questions in broad terms and using general concepts. As a result, the responses to the questions posed are discussed below in broadly grouped issue categories rather than on a question-by-question basis.

Two-tiered definitional approach. Commenters supported the Department's proposal to use a two-tiered definition of mobility device. Commenters nearly universally said that wheelchairs always should be accommodated and that they should never be subject to an assessment with regard to their admission to a particular public accommodation. In contrast, the vast majority of commenters indicated they were in favor of allowing public accommodations to conduct an assessment as to whether, and under which circumstances, other power-driven mobility devices will be allowed on-site.

Many commenters also indicated their support for the two-tiered approach in responding to questions concerning the definition of ''wheelchair'' and ''other power-driven mobility device.'' Nearly every disability advocacy group said that the Department's two-tiered approach strikes the proper balance between ensuring access for individuals with disabilities and addressing fundamental alteration and safety concerns held by public accommodations; however, a minority of disability advocacy groups wanted other power-driven mobility devices to be included in the definition of ''wheelchair.'' Most advocacy, nonprofit, and individual commenters supported the concept of a separate definition for ''other power-driven mobility device'' because a separate definition would maintain existing legal protections for wheelchairs while recognizing that some devices that are not designed primarily for individuals with mobility disabilities have beneficial uses for individuals with mobility disabilities. They also favored this concept because it recognizes technological developments and that innovative uses of varying devices may provide increased access to individuals with mobility disabilities.

While two business associations indicated that they opposed the concept of ''other power-driven mobility device'' in its entirety, other business commenters expressed general and industry-specific concerns about permitting their use. They indicated that such devices create a host of safety, cost, and fraud issues that do not exist with wheelchairs. On balance, however, business commenters indicated that they support the establishment of a two-tiered regulatory approach because defining ''other power-driven mobility device'' separately from ''wheelchair'' means that businesses will be able to maintain some measure of control over the admission of the former. Virtually all of these commenters indicated that their support for the dual approach and the concept of other power-driven mobility devices was, in large measure, due to the other power-driven mobility device assessment factors in §36.311(c) of the NPRM.

By maintaining the two-tiered approach to mobility devices and defining ''wheelchair'' separately from ''other power-driven mobility device,'' the Department is able to preserve the protection users of traditional wheelchairs and other manually-powered mobility aids have had since the ADA was enacted, while also recognizing that human ingenuity, personal choice, and new technologies have led to the use of devices that

may be more beneficial for individuals with certain mobility disabilities.

Moreover, the Department believes the two-tiered approach gives public accommodations guidance to follow in assessing whether reasonable modifications can be made to permit the use of other power-driven mobility devices on-site and to aid in the development of policies describing the circumstances under which persons with disabilities may use such devices. The two-tiered approach neither mandates that all other power-driven mobility devices be accommodated in every circumstance, nor excludes these devices from all protection. This approach, in conjunction with the factor assessment provisions in §36.311(b)(2), will serve as a mechanism by which public accommodations can evaluate their ability to accommodate other power-driven mobility devices. As will be discussed in more detail below, the assessment factors in §36.311(b)(2) are specifically designed to provide guidance to public accommodations regarding whether it is permissible to bar the use of a specific other power-driven mobility device in a specific facility. In making such a determination, a public accommodation must consider the device's type, size, weight dimensions, and speed; the facility's volume of pedestrian traffic; the facility's design and operational characteristics; whether the device conflicts with legitimate safety requirements; and whether the device poses a substantial risk of serious harm to the immediate environment or natural or cultural resources, or conflicts with Federal land management laws or regulations. In addition, under §36.311(b)(i) if the public accommodation claims that it cannot make reasonable modifications to its policies, practices, or procedures to permit the use of other power-driven mobility devices by individuals with disabilities, the burden of proof to demonstrate that such devices cannot be operated in accordance with legitimate safety requirements rests upon the public accommodation.

Categorization of wheelchair versus other power-driven mobility devices. Implicit in the creation of the two-tiered mobility device concept is the question of how to categorize which devices are wheelchairs and which are other power-driven mobility devices. Finding weight and size to be too restrictive, the vast majority of advocacy, nonprofit, and individual commenters opposed using the Department of Transportation's definition of ''common wheelchair'' to designate the mobility device's appropriate category. Business commenters who generally supported using weight and size as the method of categorization did so because of their concerns about having to make physical changes to their facilities to accommodate oversized devices. The vast majority of business commenters also favored using the device's intended use to categorize which devices constitute wheelchairs and which are other power-driven mobility devices. Furthermore, the intended-use determinant received a fair amount of support from advocacy, nonprofit, and individual commenters, either because they sought to preserve the broad accommodation of wheelchairs or because they sympathized with concerns about individuals without mobility disabilities fraudulently bringing other power-driven mobility devices into places of public accommodation.

Commenters seeking to have the Segway® PT included in the definition of ''wheelchair'' objected to classifying mobility devices on the basis of their intended use because they felt that such a classification would be unfair and prejudicial to Segway® PT users and would stifle personal choice, creativity, and innovation. Other advocacy and nonprofit commenters objected to employing an intended-use approach because of concerns that the focus would shift to an assessment of the device, rather than the needs or benefits to the individual with the mobility disability. They were of the view that the mobility-device classification should be based on its function—whether it is used to address a mobility disability. A few commenters raised the concern that an intended-use approach might embolden public accommodations to assess whether an individual with a mobility disability really needs to use the other power-driven mobility device at issue or to question why a wheelchair would not provide sufficient mobility. Those citing objections to the intended-use determinant indicated it would be more appropriate to make the categorization determination based on whether the device is being used for a mobility disability in the context of the impact of its use in a specific environment. Some of these commenters preferred this approach because it would allow the Segway® PT to be included in the definition of ''wheelchair.''

Some commenters were inclined to categorize mobility devices by the way in which they are powered, such as battery-powered engines versus fuel or combustion engines. One commenter suggested using exhaust level as the determinant. Although there were only a few commenters who would make the determination based on indoor or outdoor use, there was nearly universal support for banning from indoor use devices that are powered by fuel or combustion engines.

A few commenters thought it would be appropriate to categorize the devices based on their maximum speed. Others objected to this approach, stating that circumstances should dictate the appropriate speed at which mobility devices should be operated—for example, a faster speed may be safer when crossing streets than it would be for sidewalk use—and merely because a device

can go a certain speed does not mean it will be operated at that speed.

The Department has decided to maintain the device's intended use as the appropriate determinant for which devices are categorized as ''wheelchairs.'' However, because wheelchairs may be intended for use by individuals who have temporary conditions affecting mobility, the Department has decided that it is more appropriate to use the phrase ''primarily designed'' rather than ''solely designed'' in making such categorizations. The Department will not foreclose any future technological developments by identifying or banning specific devices or setting restrictions on size, weight, or dimensions. Moreover, devices designed primarily for use by individuals with mobility disabilities often are considered to be medical devices and are generally eligible for insurance reimbursement on this basis. Finally, devices designed primarily for use by individuals with mobility disabilities are less subject to fraud concerns because they were not designed to have a recreational component. Consequently, rarely, if ever, is any inquiry or assessment as to their appropriateness for use in a public accommodation necessary.

Definition of ''wheelchair.'' In seeking public feedback on the NPRM's definition of ''wheelchair,'' the Department explained its concern that the definition of ''wheelchair'' in section 508(c)(2) of the ADA (formerly section 507(c)(2), July 26, 1990, 104 Stat. 372, 42 U.S.C. 12207, renumbered section 508(c)(2), Public Law 110–325 section 6(a)(2), Sept. 25, 2008, 122 Stat. 3558), which pertains to Federal wilderness areas, is not specific enough to provide clear guidance in the array of settings covered by title III and that the stringent size and weight requirements for the Department of Transportation's definition of ''common wheelchair'' are not a good fit in the context of most public accommodations. The Department noted in the NPRM that it sought a definition of ''wheelchair'' that would include manually-operated and power-driven wheelchairs and mobility scooters (*i.e.,* those that typically are single-user, have three to four wheels, and are appropriate for both indoor and outdoor pedestrian areas), as well as a variety of types of wheelchairs and mobility scooters with individualized or unique features or models with different numbers of wheels. The NPRM defined a wheelchair as ''a device designed solely for use by an individual with a mobility impairment for the primary purpose of locomotion in typical indoor and outdoor pedestrian areas. A wheelchair may be manually-operated or power-driven.'' 73 FR 34508, 34553 (June 17, 2008). Although the NPRM's definition of ''wheelchair'' excluded mobility devices that are not designed solely for use by individuals with mobility disabilities, the Department, noting that the use of the Segway® PT by individuals with mobility disabilities is on the upswing, inquired as to whether this device should be included in the definition of ''wheelchair.''

Most business commenters wished the definition of ''wheelchair'' had included size, weight, and dimension maximums. Ultimately, however, they supported the definition because it excludes other power-driven mobility devices and enables them to engage in an assessment to determine whether a particular device can be allowed as a reasonable modification. These commenters felt this approach gave them some measure of control over whether, and under what circumstances, other power-driven mobility devices may be used in their facilities by individuals with mobility disabilities. Two commenters noted that because many mobility scooters are oversized, they are misplaced in the definition of ''wheelchair'' and belong with other power-driven mobility devices. Another commenter suggested using maximum size and weight requirements to allocate which mobility scooters should be categorized as wheelchairs, and which should be categorized as other power-driven mobility devices.

Many advocacy, nonprofit, and individual commenters indicated that as long as the Department intends the scope of the term ''mobility impairments'' to include other disabilities that cause mobility impairments (*e.g.,* respiratory, circulatory, stamina, etc.), they were in support of the language. Several commenters indicated a preference for the definition of ''wheelchair'' in section 508(c)(2) of the ADA. One commenter indicated a preference for the term ''assistive device,'' as it is defined in the Rehabilitation Act of 1973, over the term ''wheelchair.'' A few commenters indicated that strollers should be added to the preamble's list of examples of wheelchairs because parents of children with disabilities frequently use strollers as mobility devices until their children get older.

In the final rule, the Department has rearranged some wording and has made some changes in the terminology used in the definition of ''wheelchair,'' but essentially has retained the definition, and therefore the rationale, that was set forth in the NPRM. Again, the text of the ADA makes the definition of ''wheelchair'' contained in section 508(c)(2) applicable only to the specific context of uses in designated wilderness areas, and therefore does not compel the use of that definition for any other purpose. Moreover, the Department maintains that limiting the definition to devices suitable for use in an ''indoor pedestrian area'' as provided for in section 508(c)(2) of the ADA would ignore the technological advances in wheelchair design that have occurred since the ADA went into effect and that the inclusion of the phrase ''indoor pedestrian area'' in the definition of

''wheelchair'' would set back progress made by individuals with mobility disabilities who, for many years now, have been using devices designed for locomotion in indoor *and* outdoor settings. The Department has concluded that same rationale applies to placing limits on the size, weight, and dimensions of wheelchairs.

With regard to the term ''mobility impairments,'' the Department intended a broad reading so that a wide range of disabilities, including circulatory and respiratory disabilities, that make walking difficult or impossible, would be included. In response to comments on this issue, the Department has revisited the issue and has concluded that the most apt term to achieve this intent is ''mobility disability.''

In addition, the Department has decided that it is more appropriate to use the phrase, ''primarily'' designed for use by individuals with disabilities in the final rule, rather than, ''solely'' designed for use by individuals with disabilities—the phrase, proposed in the NPRM. The Department believes that this phrase more accurately covers the range of devices the Department intends to fall within the definition of ''wheelchair.''

After receiving comments that the word ''typical'' is vague and the phrase ''pedestrian areas'' is confusing to apply, particularly in the context of similar, but not identical, terms used in the proposed Standards, the Department decided to delete the term ''typical indoor and outdoor pedestrian areas'' from the final rule. Instead, the final rule references ''indoor or * * * both indoor and outdoor locomotion,'' to make clear that the devices that fall within the definition of ''wheelchair'' are those that are used for locomotion on indoor and outdoor pedestrian paths or routes and not those that are intended exclusively for traversing undefined, unprepared, or unimproved paths or routes. Thus, the final rule defines the term ''wheelchair'' to mean ''a manually-operated or power-driven device designed primarily for use by an individual with a mobility disability for the main purpose of indoor or of both indoor and outdoor locomotion.''

Whether the definition of ''wheelchair'' includes the Segway® PT. As discussed above, because individuals with mobility disabilities are using the Segway® PT as a mobility device, the Department asked whether it should be included in the definition of ''wheelchair.'' The basic Segway® PT model is a two-wheeled, gyroscopically-stabilized, battery-powered personal transportation device. The user stands on a platform suspended three inches off the ground by wheels on each side, grasps a T-shaped handle, and steers the device similarly to a bicycle. Most Segway® PTs can travel up to 12½ miles per hour, compared to the average pedestrian walking speed of 3 to 4 miles per hour and the approximate maximum speed for power-operated wheelchairs of 6 miles per hour. In a study of trail and other non-motorized transportation users including EPAMDs, the Federal Highway Administration (FHWA) found that the eye height of individuals using EPAMDs ranged from approximately 69 to 80 inches. *See* Federal Highway Administration, *Characteristics of Emerging Road and Trail Users and Their Safety* (Oct. 14, 2004), available at *http://www.tfhrc.gov/safety/pubs/04103* (last visited June 24, 2010). Thus, the Segway® PT can operate at much greater speeds than wheelchairs, and the average user stands much taller than most wheelchair users.

The Segway® PT has been the subject of debate among users, pedestrians, disability advocates, State and local governments, businesses, and bicyclists. The fact that the Segway® PT is not designed primarily for use by individuals with disabilities, nor used primarily by persons with disabilities, complicates the question of to what extent individuals with disabilities should be allowed to operate them in areas and facilities where other power-driven mobility devices are not allowed. Those who question the use of the Segway® PT in pedestrian areas argue that the speed, size, and operating features of the devices make them too dangerous to operate alongside pedestrians and wheelchair users.

Comments regarding whether to include the Segway® PT in the definition of ''wheelchair'' were, by far, the most numerous received in the category of comments regarding wheelchairs and other power-driven mobility devices. Significant numbers of veterans with disabilities, individuals with multiple sclerosis, and those advocating on their behalf made concise statements of general support for the inclusion of the Segway® PT in the definition of ''wheelchair.'' Two veterans offered extensive comments on the topic, along with a few advocacy and nonprofit groups and individuals with disabilities for whom sitting is uncomfortable or impossible.

While there may be legitimate safety issues for EPAMD users and bystanders in some circumstances, EPAMDs and other non-traditional mobility devices can deliver real benefits to individuals with disabilities. Among the reasons given by commenters to include the Segway® PT in the definition of ''wheelchair'' were that the Segway® PT is well-suited for individuals with particular conditions that affect mobility including multiple sclerosis, Parkinson's disease, chronic obstructive pulmonary disease, amputations, spinal cord injuries, and other neurological disabilities, as well as functional limitations, such as gait limitation, inability to sit or discomfort in sitting, and diminished stamina issues. Such individuals

often find that EPAMDs are more comfortable and easier to use than more traditional mobility devices and assist with balance, circulation, and digestion in ways that wheelchairs do not. *See* Rachel Metz, *Disabled Embrace Segway*, New York Times, Oct. 14, 2004. Commenters specifically cited pressure relief, reduced spasticity, increased stamina, and improved respiratory, neurologic, and muscular health as secondary medical benefits from being able to stand.

Other arguments for including the Segway® PT in the definition of ''wheelchair'' were based on commenters' views that the Segway® PT offers benefits not provided by wheelchairs and mobility scooters, including its intuitive response to body movement, ability to operate with less coordination and dexterity than is required for many wheelchairs and mobility scooters, and smaller footprint and turning radius as compared to most wheelchairs and mobility scooters. Several commenters mentioned improved visibility, either due to the Segway® PT's raised platform or simply by virtue of being in a standing position. And finally, some commenters advocated for the inclusion of the Segway® PT simply based on civil rights arguments and the empowerment and self-esteem obtained from having the power to select the mobility device of choice.

Many commenters, regardless of their position on whether to include the Segway® PT in the definition of ''wheelchair,'' noted that the Segway® PT's safety record is as good as, if not better, than the record for wheelchairs and mobility scooters.

Most business commenters were opposed to the inclusion of the Segway® PT in the definition of ''wheelchair'' but were supportive of its inclusion as an ''other power-driven mobility device.'' They raised industry- or venue-specific concerns about including the Segway® PT in the definition of ''wheelchair.'' For example, civic centers, arenas, and theaters were concerned about the impact on sight-line requirements if Segway® PT users remain on their devices in a designated wheelchair seating area; amusement parks expressed concern that rides have been designed, purchased, and installed to enable wheelchair users to transfer easily or to accommodate wheelchairs on the ride itself; and retail stores mentioned size constraints in some stores. Nearly all business commenters expressed concern—and perceived liability issues—related to having to store or stow the Segway® PT, particularly if it could not be stored in an upright position. These commenters cited concerns about possible damage to the device, injury to customers who may trip over it, and theft of the device as a result of not being able to stow the Segway® PT securely.

Virtually every business commenter mentioned concerns about rider safety, as well as concerns for pedestrians unexpectedly encountering these devices or being hit or run over by these devices in crowded venues where maneuvering space is limited. Their main safety objection to the inclusion of the Segway® PT in the definition of ''wheelchair'' was that the maximum speed at which the Segway® PT can operate is far faster than that of motorized wheelchairs. There was a universal unease among these commenters with regard to relying on the judgment of the Segway® PT user to exercise caution because its top speed is far in excess of a wheelchair's top speed. Many other safety concerns were industry-specific. For example, amusement parks were concerned that the Segway® PT is much taller than children; that it is too quiet to warn pedestrians, particularly those with low vision or who are blind, of their presence; that it may keep moving after a rider has fallen off or power system fails; and that it has a full-power override which automatically engages when an obstacle is encountered. Hotels and retail stores mentioned that maneuvering the Segway® PT through their tight quarters would create safety hazards.

Business commenters also expressed concern that if the Segway® PT were included in the definition of ''wheelchair'' they would have to make physical changes to their facilities to accommodate Segway® PT riders who stand much taller in these devices than do users of wheelchairs. They also were concerned that if the Segway®7 PT was included in the definition of ''wheelchair,'' they would have no ability to assess whether it is appropriate to allow the entry of the Segway® PT into their facilities the way they would have if the device is categorized as an ''other power-driven mobility device.''

Many disability advocacy and nonprofit commenters did not support the inclusion of the Segway® PT in the definition of ''wheelchair.'' Paramount to these commenters was the maintenance of existing protections for wheelchair users. Because there was unanimous agreement that wheelchair use rarely, if ever, may be restricted, these commenters strongly favored categorizing wheelchairs separately from the Segway® PT and other power-driven mobility devices and applying the intended-use determinant to assign the devices to either category. They indicated that while they support the greatest degree of access in public accommodations for all persons with disabilities who require the use of mobility devices, they recognize that under certain circumstances allowing the use of other power-driven mobility devices would result in a fundamental alteration or run counter to legitimate safety requirements necessary for the safe operation of a public accommodation. While these groups supported categorizing the Segway® PT as an ''other power-driven mobility device,'' they universally noted that because the Segway® PT does not present environmental

concerns and is as safe to use as, if not safer than, a wheelchair, it should be accommodated in most circumstances.

The Department has considered all the comments and has concluded that it should not include the Segway® PT in the definition of ''wheelchair.'' The final rule provides that the test for categorizing a device as a wheelchair or an other power-driven mobility device is whether the device is designed primarily for use by individuals with mobility disabilities. Mobility scooters are included in the definition of ''wheelchair'' because they are designed primarily for users with mobility disabilities. However, because the current generation of EPAMDs, including the Segway® PT, was designed for recreational users and not primarily for use by individuals with mobility disabilities, the Department has decided to continue its approach of excluding EPAMDs from the definition of ''wheelchair'' and including them in the definition of ''other power-driven mobility device.'' Although EPAMDs, such as the Segway® PT, are not included in the definition of a ''wheelchair,'' public accommodations must assess whether they can make reasonable modifications to permit individuals with mobility disabilities to use such devices on their premises. The Department recognizes that the Segway® PT provides many benefits to those who use them as mobility devices, including a measure of privacy with regard to the nature of one's particular disability, and believes that in the vast majority of circumstances, the application of the factors described in §36.311 for providing access to other-powered mobility devices will result in the admission of the Segway® PT.

Treatment of ''manually-powered mobility aids.'' The Department's NPRM did not define the term ''manually-powered mobility aids.'' Instead, the NPRM included a non-exhaustive list of examples in §36.311(a). The NPRM queried whether the Department should maintain this approach to manually-powered mobility aids or whether it should adopt a more formal definition.

Only a few commenters addressed ''manually-powered mobility aids.'' Virtually all commenters were in favor of maintaining a non-exhaustive list of examples of ''manually-powered mobility aids'' rather than adopting a definition of the term. Of those who commented, a couple sought clarification of the term ''manually-powered.'' One commenter suggested that the term be changed to ''human-powered.'' Other commenters requested that the Department include ordinary strollers in the non-exhaustive list of manually-powered mobility aids. Since strollers are not devices designed primarily for individuals with mobility disabilities, the Department does not consider them to be manually-powered mobility aids; however, strollers used in the context of transporting individuals with disabilities are subject to the same assessment required by the ADA's reasonable modification standards at §36.302. The Department believes that because the existing approach is clear and understood easily by the public, no formal definition of the term ''manually-powered mobility aids'' is required.

Definition of ''other power-driven mobility device.'' The Department's NPRM defined the term ''other power-driven mobility device'' in §36.104 as ''any of a large range of devices powered by batteries, fuel, or other engines—whether or not designed solely for use by individuals with mobility impairments—that are used by individuals with mobility impairments for the purpose of locomotion, including golf cars, bicycles, electronic personal assistance mobility devices (EPAMDs), or any mobility aid designed to operate in areas without defined pedestrian routes.'' 73 FR 34508, 34552 (June 17, 2008).

Business commenters mostly were supportive of the definition of ''other power-driven mobility device'' because it gave them the ability to develop policies pertaining to the admission of these devices, but they expressed concern that individuals will feign mobility disabilities so that they can use devices that are otherwise banned in public accommodations. Advocacy, nonprofit, and several individual commenters supported the definition of ''other power-driven mobility device'' because it allows new technologies to be added in the future, maintains the existing legal protections for wheelchairs, and recognizes that some devices, particularly the Segway® PT, which are not designed primarily for individuals with mobility disabilities, have beneficial uses for individuals with mobility disabilities.

Despite support for the definition of ''other power-driven mobility device,'' however, most advocacy and nonprofit commenters expressed at least some hesitation about the inclusion of fuel-powered mobility devices in the definition. While virtually all of these commenters noted that a blanket exclusion of any device that falls under the definition of ''other power-driven mobility device'' would violate basic civil rights concepts, they also specifically stated that certain devices, particularly off-highway vehicles, cannot be permitted in certain circumstances. They also made a distinction between the Segway® PT and other power-driven mobility devices, noting that the Segway® PT should be accommodated in most circumstances because it satisfies the safety and environmental elements of the policy analysis. These commenters indicated that they agree that other power-driven mobility devices must be assessed, particularly as to their environmental impact, before they are accommodated.

Business commenters were even less supportive of the inclusion of fuel-powered devices in the other power-driven mobility devices category. They sought a complete ban on fuel-powered devices because they believe they are inherently dangerous and pose environmental and safety concerns.

Although many commenters had reservations about the inclusion of fuel-powered devices in the definition of other power-driven mobility devices, the Department does not want the definition to be so narrow that it would foreclose the inclusion of new technological developments, whether powered by fuel or by some other means. It is for this reason that the Department has maintained the phrase ''any mobility device designed to operate in areas without defined pedestrian routes'' in the final rule's definition of other power-driven mobility devices. The Department believes that the limitations provided by ''fundamental alteration'' and the ability to impose legitimate safety requirements will likely prevent the use of fuel and combustion engine-driven devices indoors, as well as in outdoor areas with heavy pedestrian traffic. The Department notes, however, that in the future technological developments may result in the production of safe fuel-powered mobility devices that do not pose environmental and safety concerns. The final rule allows consideration to be given as to whether the use of a fuel-powered device would create a substantial risk of serious harm to the environment or natural or cultural resources, and to whether the use of such a device conflicts with Federal land management laws or regulations; this aspect of the final rule will further limit the inclusion of fuel-powered devices where they are not appropriate. Consequently, the Department has maintained fuel-powered devices in the definition of ''other power-driven mobility devices.'' The Department has also added language to the definition of ''other power-driven mobility device'' to reiterate that the definition does not apply to Federal wilderness areas, which are not covered by title II of the ADA; the use of wheelchairs in such areas is governed by section 508(c)(2) of the ADA, 42 U.S.C. 12207(c)(2).

''Place of Public Accommodation''

Definition of ''place of lodging.'' The NPRM stated that a covered ''place of lodging'' is a facility that provides guest rooms for sleeping for stays that are primarily short-term in nature (generally two weeks or less), to which the occupant does not have the right or intent to return to a specific room or unit after the conclusion of his or her stay, and which operates under conditions and with amenities similar to a hotel, motel, or inn, particularly including factors such as: (1) An on-site proprietor and reservations desk; (2) rooms available on a walk-up basis; (3) linen service; and (4) a policy of accepting reservations for a room type without guaranteeing a particular unit or room until check-in, without a prior lease or security deposit. The NPRM stated that timeshares and condominiums or corporate hotels that did not meet this definition would not be covered by §36.406(c) of the proposed regulation, but may be covered by the requirements of the Fair Housing Act (FHAct).

In the NPRM, the Department sought comment on its definition of ''place of lodging,'' specifically seeking public input on whether the most appropriate time period for identifying facilities used for stays that primarily are short-term in nature should be set at 2 weeks or 30 days.

The vast majority of the comments received by the Department supported the use of a 30-day limitation on places of lodging as more consistent with building codes, local laws, and common real estate practices that treat stays of 30 days or less as transient rather than residential use. One commenter recommended using the phrase ''fourteen days or less.'' Another commenter objected to any bright line standard, stating that the difference between two weeks and 30 days for purposes of title III is arbitrary, viewed in light of conflicting regulations by the States. This commenter argued the Department should continue its existing practice under title III of looking to State law as one factor in determining whether a facility is used for stays that primarily are short-term in nature.

The Department is persuaded by the majority of commenters to adopt a 30-day guideline for the purposes of identifying facilities that primarily are short-term in nature and has modified the section accordingly. The 30-day guideline is intended only to determine when the final rule's transient lodging provisions apply to a facility. It does not alter an entity's obligations under any other applicable statute. For example, the Department recognizes that the FHAct does not employ a bright line standard for determining which facilities qualify as residential facilities under that Act and that there are circumstances where units in facilities that meet the definition of places of lodging will be covered under both the ADA and the FHAct and will have to comply with the requirements of both laws.

The Department also received comments about the factors used in the NPRM's definition of ''place of lodging.'' One commenter proposed modifications to the definition as follows: changing the words ''guest rooms'' to ''accommodations for sleeping''; and adding a fifth factor that states that ''the in-room decor, furnishings and equipment being specified by the owner or operator of the lodging operation rather than generally being determined by the owner of the individual unit or room.'' The Department does

not believe that ''guest room'' should be changed to ''accommodations for sleeping.'' Such a change would create confusion because the transient lodging provisions in the 2004 ADAAG use the term ''guest rooms'' and not ''accommodations for sleeping.'' In addition, the Department believes that it would be confusing to add a factor relating to who dictates the in-room decor and furnishings in a unit or room, because there may be circumstances where particular rental programs require individual owners to use certain decor and furnishings as a condition of participating in that program.

One commenter stated that the factors the Department has included for determining whether a rental unit is a place of lodging for the purposes of title III, and therefore a ''place of public accommodation'' under the ADA, address only the way an establishment appears to the public. This commenter recommended that the Department also consider the economic relationships among the unit owners, rental managers, and homeowners' associations, noting that where revenues are not pooled (as they are in a hotel), the economic relationships do not make it possible to spread the cost of providing accessibility features over the entire business enterprise. Another commenter argued that private ownership of sleeping accommodations sets certain facilities apart from traditional hotels, motels, and inns, and that the Department should revise the definition of places of lodging to exempt existing places of lodging that have sleeping accommodations separately owned by individual owners (*e.g.*, condominiums) from the accessible transient lodging guest room requirements in sections 224 and 806 of the 2004 ADAAG, although the commenter agreed that newly constructed places of lodging should meet those standards.

One commenter argued that the Department's proposed definition of place of lodging does not reflect fully the nature of a timeshare facility and one single definition does not fit timeshares, condo hotels, and other types of rental accommodations. This commenter proposed that the Department adopt a separate definition for timeshare resorts as a subcategory of place of lodging. The commenter proposed defining timeshare resorts as facilities that provide the recurring right to occupancy for overnight accommodations for the owners of the accommodations, and other occupancy rights for owners exchanging their interests or members of the public for stays that primarily are short-term in nature (generally 30 consecutive days or less), where neither the owner nor any other occupant has the right or intent to use the unit or room on other than a temporary basis for vacation or leisure purposes. This proposed definition also would describe factors for determining when a timeshare resort is operating in a manner similar to a hotel, motel, or inn, including some or all of the following: rooms being available on a walk-in or call-in basis; housekeeping or linen services being available; on-site management; and reservations being accepted for a room type without guaranteeing any guest or owner use of a particular unit or room until check-in, without a prior lease or security deposit. Timeshares that do not meet this definition would not be subject to the transient lodging standards.

The Department has considered these comments and has revised the definition of ''place of accommodation'' in §36.104 to include a revised subcategory (B), which more clearly defines the factors that must be present for a facility that is not an inn, motel, or hotel to qualify as a place of lodging. These factors include conditions and amenities similar to an inn, motel, or hotel, including on- or off-site management and reservations service, rooms available on a walk-up or call-in basis, availability of housekeeping or linen service, and accepting reservations for a room type without guaranteeing a particular unit or room until check-in without a prior lease or security deposit.

Although the Department understands some of the concerns about the application of the ADA requirements to places of lodging that have ownership structures that involve individually owned units, the Department does not believe that the definitional section of the regulation is the place to address these concerns and has addressed them in §36.406(c)(2) and the accompanying discussion in appendix A.

''Qualified Interpreter''

In the NPRM, the Department proposed adding language to the definition of ''qualified interpreter'' to clarify that the term includes, but is not limited to, sign language interpreters, oral interpreters, and cued-speech interpreters. As the Department explained, not all interpreters are qualified for all situations. For example, a qualified interpreter who uses American Sign Language (ASL) is not necessarily qualified to interpret orally. In addition, someone with only a rudimentary familiarity with sign language or finger spelling is not qualified, nor is someone who is fluent in sign language but unable to translate spoken communication into ASL or to translate signed communication into spoken words.

As further explained, different situations will require different types of interpreters. For example, an oral interpreter who has special skill and training to mouth a speaker's words silently for individuals who are deaf or hard of hearing may be necessary for an individual who was raised orally and taught to read lips or was diagnosed with hearing loss later in life and does not know sign language. An individual who is deaf or hard of hearing may need an oral interpreter

if the speaker's voice is unclear, if there is a quick-paced exchange of communication (*e.g.*, in a meeting), or when the speaker does not directly face the individual who is deaf or hard of hearing. A cued-speech interpreter functions in the same manner as an oral interpreter except that he or she also uses a hand code or cue to represent each speech sound.

The Department received many comments regarding the proposed modifications to the definition of ''qualified interpreter.'' Many commenters requested that the Department include within the definition a requirement that interpreters be certified, particularly if they reside in a State that licenses or certifies interpreters. Other commenters opposed a certification requirement as unduly limiting, noting that an interpreter may well be qualified even if that same interpreter is not certified. These commenters noted the absence of nationwide standards or universally accepted criteria for certification.

On review of this issue, the Department has decided against imposing a certification requirement under the ADA. It is sufficient under the ADA that the interpreter be qualified. With respect to the proposed additions to the rule, most commenters supported the expansion of the list of qualified interpreters, and some advocated for the inclusion of other types of interpreters on the list as well, such as deaf-blind interpreters, certified deaf interpreters, and speech-to-speech interpreters. As these commenters explained, deaf-blind interpreters are interpreters who have specialized skills and training to interpret for individuals who are deaf and blind. Certified deaf interpreters are deaf or hard of hearing interpreters who work with hearing sign language interpreters to meet the specific communication needs of deaf individuals. Speech-to-speech interpreters have special skill and training to interpret for individuals who have speech disabilities.

The list of interpreters in the definition of ''qualified interpreter'' is illustrative, and the Department does not believe it is necessary or appropriate to attempt to provide an exhaustive list of qualified interpreters. Accordingly, the Department has decided not to expand the proposed list. However, if a deaf and blind individual needs interpreting services, an interpreter who is qualified to handle the interpreting needs of that individual may be required. The guiding criterion is that the public accommodation must provide appropriate auxiliary aids and services to ensure effective communication with the individual.

Commenters also suggested various definitions for the term ''cued-speech interpreters,'' and different descriptions of the tasks they performed. After reviewing the various comments, the Department has determined that it is more accurate and appropriate to refer to such individuals as ''cued-language transliterators.'' Likewise, the Department has changed the term ''oral interpreters'' to ''oral transliterators.'' These two changes have been made to distinguish between sign language interpreters, who translate one language into another language (*e.g.*, ASL to English and English to ASL), from transliterators, who interpret within the same language between deaf and hearing individuals. A cued-language transliterator is an interpreter who has special skill and training in the use of the Cued Speech system of handshapes and placements, along with non-manual information, such as facial expression and body language, to show auditory information visually, including speech and environmental sounds. An oral transliterator is an interpreter who has special skill and training to mouth a speaker's words silently for individuals who are deaf or hard of hearing. While the Department included definitions for ''cued-speech interpreter'' and ''oral interpreter'' in the regulatory text proposed in the NPRM, the Department has decided that it is unnecessary to include such definitions in the text of the final rule.

Many commenters questioned the proposed deletion of the requirement that a qualified interpreter be able to interpret both receptively and expressively, noting the importance of both these skills. Commenters noted that this phrase was carefully crafted in the original regulation to make certain that interpreters both (1) are capable of understanding what a person with a disability is saying and (2) have the skills needed to convey information back to that individual. These are two very different skill sets and both are equally important to achieve effective communication. For example, in a medical setting, a sign language interpreter must have the necessary skills to understand the grammar and syntax used by an ASL user (receptive skills) and the ability to interpret complicated medical information—presented by medical staff in English—back to that individual in ASL (expressive skills). The Department agrees and has put the phrase ''both receptively and expressively'' back in the definition.

Several advocacy groups suggested that the Department make clear in the definition of qualified interpreter that the interpreter may appear either on-site or remotely using a video remote interpreting (VRI) service. Given that the Department has included in this rule both a definition of VRI services and standards that such services must satisfy, such an addition to the definition of qualified interpreter is appropriate.

After consideration of all relevant information submitted during the public comment period, the Department has modified the definition from that initially proposed in

the NPRM. The final definition now states that ''[q]ualified interpreter means an interpreter who, via a video remote interpreting (VRI) service or an on-site appearance, is able to interpret effectively, accurately, and impartially, both receptively and expressively, using any necessary specialized vocabulary. Qualified interpreters include, for example, sign language interpreters, oral transliterators, and cued-language transliterators.''

''Qualified Reader''

The 1991 title III regulation identified a qualified reader as an auxiliary aid, but did not define the term. Based upon the Department's investigation of complaints alleging that some entities have provided ineffective readers, the Department proposed in the NPRM to define ''qualified reader'' similarly to ''qualified interpreter'' to ensure that public accommodations select qualified individuals to read an examination or other written information in an effective, accurate, and impartial manner. This proposal was suggested in order to make clear to public accommodations that a failure to provide a qualified reader to a person with a disability may constitute a violation of the requirement to provide appropriate auxiliary aids and services.

The Department received comments supporting the inclusion in the regulation of a definition of a ''qualified reader.'' Some commenters suggested the Department add to the definition a requirement prohibiting the use of a reader whose accent, diction, or pronunciation makes full comprehension of material being read difficult. Another commenter requested that the Department include a requirement that the reader ''will follow the directions of the person for whom he or she is reading.'' Commenters also requested that the Department define ''accurately'' and ''effectively'' as used in this definition.

While the Department believes that the regulatory definition proposed in the NPRM adequately addresses these concerns, the Department emphasizes that a reader, in order to be ''qualified,'' must be skilled in reading the language and subject matter and must be able to be easily understood by the individual with the disability. For example, if a reader is reading aloud the questions for a bar examination, that reader, in order to be qualified, must know the proper pronunciation of all legal terminology used and must be sufficiently articulate to be easily understood by the individual with a disability for whom he or she is reading. In addition, the terms ''effectively'' and ''accurately'' have been successfully used and understood in the Department's existing definition of ''qualified interpreter'' since 1991 without specific regulatory definitions. Instead, the Department has relied upon the common use and understanding of those terms from standard English dictionaries. Thus, the definition of ''qualified reader'' has not been changed from that contained in the NPRM. The final rule defines a ''qualified reader'' to mean ''a person who is able to read effectively, accurately, and impartially using any necessary specialized vocabulary.''

''Service Animal''

Section 36.104 of the 1991 title III regulation defines a ''service animal'' as ''any guide dog, signal dog, or other animal individually trained to do work or perform tasks for the benefit of an individual with a disability, including, but not limited to, guiding individuals with impaired vision, alerting individuals with impaired hearing to intruders or sounds, providing minimal protection or rescue work, pulling a wheelchair, or fetching dropped items.'' Section 36.302(c)(1) of the 1991 title III regulation requires that ''[g]enerally, a public accommodation shall modify policies, practices, or procedures to permit the use of a service animal by an individual with a disability.'' Section 36.302(c)(2) of the 1991 title III regulation states that ''a public accommodation [is not required] to supervise or care for a service animal.''

The Department has issued guidance and provided technical assistance and publications concerning service animals since the 1991 regulations became effective. In the NPRM, the Department proposed to modify the definition of service animal and asked for public input on several issues related to the service animal provisions of the 1991 title III regulation: whether the Department should clarify the phrase ''providing minimal protection'' in the definition or remove it; whether there are any circumstances where a service animal ''providing minimal protection'' would be appropriate or expected; whether certain species should be eliminated from the definition of ''service animal,'' and, if so, which types of animals should be excluded; whether ''common domestic animal'' should be part of the definition; and whether a size or weight limitation should be imposed for common domestic animals, even if the animal satisfies the ''common domestic animal'' part of the NPRM definition.

The Department received extensive comments on these issues, as well as requests to clarify the obligations of public accommodations to accommodate individuals with disabilities who use service animals, and has modified the final rule in response. In the interests of avoiding unnecessary repetition, the Department has elected to discuss the issues raised in the NPRM questions about service animals and the corresponding public

comments in the following discussion of the definition of ''service animal.''

The Department's final rule defines ''service animal'' as ''any dog that is individually trained to do work or perform tasks for the benefit of an individual with a disability, including a physical, sensory, psychiatric, intellectual, or other mental disability. Other species of animals, whether wild or domestic, trained or untrained, are not service animals for the purposes of this definition. The work or tasks performed by a service animal must be directly related to the individual's disability. Examples of work or tasks include, but are not limited to, assisting individuals who are blind or have low vision with navigation and other tasks, alerting individuals who are deaf or hard of hearing to the presence of people or sounds, providing non-violent protection or rescue work, pulling a wheelchair, assisting an individual during a seizure, alerting individuals to the presence of allergens, retrieving items such as medicine or the telephone, providing physical support and assistance with balance and stability to individuals with mobility disabilities, and helping persons with psychiatric and neurological disabilities by preventing or interrupting impulsive or destructive behaviors. The crime deterrent effects of an animal's presence and the provision of emotional support, well-being, comfort, or companionship do not constitute work or tasks for the purposes of this definition.''

This definition has been designed to clarify a key provision of the ADA. Many covered entities indicated that they are confused regarding their obligations under the ADA with regard to individuals with disabilities who use service animals. Individuals with disabilities who use trained guide or service dogs are concerned that if untrained or unusual animals are termed ''service animals,'' their own right to use guide or service dogs may become unnecessarily restricted or questioned. Some individuals who are not individuals with disabilities have claimed, whether fraudulently or sincerely (albeit mistakenly), that their animals are service animals covered by the ADA, in order to gain access to hotels, restaurants, and other places of public accommodation. The increasing use of wild, exotic, or unusual species, many of which are untrained, as service animals has also added to the confusion.

Finally, individuals with disabilities who have the legal right under the Fair Housing Act (FHAct) to use certain animals in their homes as a reasonable accommodation to their disabilities have assumed that their animals also qualify under the ADA. This is not necessarily the case, as discussed below.

The Department recognizes the diverse needs and preferences of individuals with disabilities protected under the ADA, and does not wish to unnecessarily impede individual choice. Service animals play an integral role in the lives of many individuals with disabilities, and with the clarification provided by the final rule, individuals with disabilities will continue to be able to use their service animals as they go about their daily activities. The clarification will also help to ensure that the fraudulent or mistaken use of other animals not qualified as service animals under the ADA will be deterred. A more detailed analysis of the elements of the definition and the comments responsive to the service animal provisions of the NPRM follows.

Providing minimal protection. The 1991 title III regulation included language stating that ''minimal protection'' was a task that could be performed by an individually trained service animal for the benefit of an individual with a disability. In the Department's ''ADA Business Brief on Service Animals'' (2002), the Department interpreted the ''minimal protection'' language within the context of a seizure (*i.e.*, alerting and protecting a person who is having a seizure). The Department received many comments in response to the question of whether the ''minimal protection'' language should be clarified. Many commenters urged the removal of the ''minimal protection'' language from the service animal definition for two reasons: (1) The phrase can be interpreted to allow any dog that is trained to be aggressive to qualify as a service animal simply by pairing the animal with a person with a disability; and (2) The phrase can be interpreted to allow any untrained pet dog to qualify as a service animal, since many consider the mere presence of a dog to be a crime deterrent, and thus sufficient to meet the minimal protection standard. These commenters argued, and the Department agrees, that these interpretations were not contemplated under the original title III regulation.

While many commenters stated that they believe that the ''minimal protection'' language should be eliminated, other commenters recommended that the language be clarified, but retained. Commenters favoring clarification of the term suggested that the Department explicitly exclude the function of attack or exclude those animals that are trained solely to be aggressive or protective. Other commenters identified non-violent behavioral tasks that could be construed as minimally protective, such as interrupting self-mutilation, providing safety checks and room searches, reminding the individual to take medications, and protecting the individual from injury resulting from seizures or unconsciousness.

Several commenters noted that the existing direct threat defense, which allows the exclusion of a service animal if the animal exhibits unwarranted or unprovoked violent behavior or poses a direct threat, prevents the use of ''attack dogs'' as service animals.

One commenter noted that the use of a service animal trained to provide ''minimal protection'' may impede access to care in an emergency, for example, where the first responder is unable or reluctant to approach a person with a disability because the individual's service animal is in a protective posture suggestive of aggression.

Many organizations and individuals stated that in the general dog training community, ''protection'' is code for attack or aggression training and should be removed from the definition. Commenters stated that there appears to be a broadly held misconception that aggression-trained animals are appropriate service animals for persons with post traumatic stress disorder (PTSD). While many individuals with PTSD may benefit by using a service animal, the work or tasks performed appropriately by such an animal would not involve unprovoked aggression, but could include actively cuing the individual by nudging or pawing the individual to alert to the onset of an episode and removing the individual from the anxiety-provoking environment.

The Department recognizes that despite its best efforts to provide clarification, the ''minimal protection'' language appears to have been misinterpreted. While the Department maintains that protection from danger is one of the key functions that service animals perform for the benefit of persons with disabilities, the Department recognizes that an animal individually trained to provide aggressive protection, such as an attack dog, is not appropriately considered a service animal. Therefore, the Department has decided to modify the ''minimal protection'' language to read ''non-violent protection,'' thereby excluding so-called ''attack dogs'' or dogs with traditional ''protection training'' as service animals. The Department believes that this modification to the service animal definition will eliminate confusion, without restricting unnecessarily the type of work or tasks that service animals may perform. The Department's modification also clarifies that the crime-deterrent effect of a dog's presence, by itself, does not qualify as work or tasks for purposes of the service animal definition.

Alerting to intruders. The phrase ''alerting to intruders'' is related to the issues of minimal protection and the work or tasks an animal may perform to meet the definition of a service animal. In the original 1991 regulatory text, this phrase was intended to identify service animals that alert individuals who are deaf or hard of hearing to the presence of others. This language has been misinterpreted by some to apply to dogs that are trained specifically to provide aggressive protection, resulting in the assertion that such training qualifies a dog as a service animal under the ADA. The Department reiterates that public accommodations are not required to admit any animal whose use poses a direct threat. In addition, the Department has decided to remove the word ''intruders'' from the service animal definition and replace it with the phrase ''the presence of people or sounds.'' The Department believes this clarifies that so-called ''attack training'' or other aggressive response types of training that cause a dog to provide an aggressive response do not qualify a dog as a service animal under the ADA.

Conversely, if an individual uses a breed of dog that is perceived to be aggressive because of breed reputation, stereotype, or the history or experience the observer may have with other dogs, but the dog is under the control of the individual with a disability and does not exhibit aggressive behavior, the public accommodation cannot exclude the individual or the animal from the place of public accommodation. The animal can only be removed if it engages in the behaviors mentioned in §36.302(c) (as revised in the final rule) or if the presence of the animal constitutes a fundamental alteration to the nature of the goods, services, facilities, and activities of the place of public accommodation.

''Doing work'' or ''performing tasks.'' The NPRM proposed that the Department maintain the requirement first articulated in the 1991 title III regulation that in order to qualify as a service animal, the animal must ''perform tasks'' or ''do work'' for the individual with a disability. The phrases ''perform tasks'' and ''do work'' describe what an animal must do for the benefit of an individual with a disability in order to qualify as a service animal.

The Department received a number of comments in response to the NPRM proposal urging the removal of the term ''do work'' from the definition of a service animal. These commenters argued that the Department should emphasize the performance of tasks instead. The Department disagrees. Although the common definition of work includes the performance of tasks, the definition of work is somewhat broader, encompassing activities that do not appear to involve physical action.

One service dog user stated that, in some cases, ''critical forms of assistance can't be construed as physical tasks,'' noting that the manifestations of ''brain-based disabilities,'' such as psychiatric disorders and autism, are as varied as their physical counterparts. The Department agrees with this statement but cautions that unless the animal is individually trained to do something that qualifies as work or a task, the animal is a pet or support animal and does not qualify for coverage as a service animal. A pet or support animal may be able to discern that the individual is in distress, but it is what the animal is trained to do in response to this awareness that distinguishes a service

animal from an observant pet or support animal.

The NPRM contained an example of ''doing work'' that stated ''a psychiatric service dog can help some individuals with dissociative identity disorder to remain grounded in time or place.'' 73 FR 34508, 34521 (June 17, 2008). Several commenters objected to the use of this example, arguing that grounding was not a ''task'' and therefore the example inherently contradicted the basic premise that a service animal must perform a task in order to mitigate a disability. Other commenters stated that ''grounding'' should not be included as an example of ''work'' because it could lead to some individuals claiming that they should be able to use emotional support animals in public because the dog makes them feel calm or safe. By contrast, one commenter with experience in training service animals explained that grounding is a trained task based upon very specific behavioral indicators that can be observed and measured. These tasks are based upon input from mental health practitioners, dog trainers, and individuals with a history of working with psychiatric service dogs.

It is the Department's view that an animal that is trained to ''ground'' a person with a psychiatric disorder does work or performs a task that would qualify it as a service animal as compared to an untrained emotional support animal whose presence affects a person's disability. It is the fact that the animal is trained to respond to the individual's needs that distinguishes an animal as a service animal. The process must have two steps: Recognition and response. For example, if a service animal senses that a person is about to have a psychiatric episode and it is trained to respond, for example, by nudging, barking, or removing the individual to a safe location until the episode subsides, then the animal has indeed performed a task or done work on behalf of the individual with the disability, as opposed to merely sensing an event.

One commenter suggested defining the term ''task,'' presumably to improve the understanding of the types of services performed by an animal that would be sufficient to qualify the animal for coverage. The Department believes that the common definition of the word ''task'' is sufficiently clear and that it is not necessary to add to the definitions section. However, the Department has added examples of other kinds of work or tasks to help illustrate and provide clarity to the definition. After careful evaluation of this issue, the Department has concluded that the phrases ''do work'' and ''perform tasks'' have been effective during the past two decades to illustrate the varied services provided by service animals for the benefit of individuals with all types of disabilities. Thus, the Department declines to depart from its longstanding approach at this time.

Species limitations. When the Department originally issued its title III regulation in the early 1990s, the Department did not define the parameters of acceptable animal species. At that time, few anticipated the variety of animals that would be promoted as service animals in the years to come, which ranged from pigs and miniature horses to snakes, iguanas, and parrots. The Department has followed this particular issue closely, keeping current with the many unusual species of animals represented to be service animals. Thus, the Department has decided to refine further this aspect of the service animal definition in the final rule.

The Department received many comments from individuals and organizations recommending species limitations. Several of these commenters asserted that limiting the number of allowable species would help stop erosion of the public's trust, which has resulted in reduced access for many individuals with disabilities who use trained service animals that adhere to high behavioral standards. Several commenters suggested that other species would be acceptable if those animals could meet nationally recognized behavioral standards for trained service dogs. Other commenters asserted that certain species of animals (*e.g.*, reptiles) cannot be trained to do work or perform tasks, so these animals would not be covered.

In the NPRM, the Department used the term ''common domestic animal'' in the service animal definition and excluded reptiles, rabbits, farm animals (including horses, miniature horses, ponies, pigs, and goats), ferrets, amphibians, and rodents from the service animal definition. 73 FR 34508, 34553 (June 17, 2008). However, the term ''common domestic animal'' is difficult to define with precision due to the increase in the number of domesticated species. Also, several State and local laws define a ''domestic'' animal as an animal that is not wild.

The Department is compelled to take into account the practical considerations of certain animals and to contemplate their suitability in a variety of public contexts, such as restaurants, grocery stores, hospitals, and performing arts venues, as well as suitability for urban environments. The Department agrees with commenters' views that limiting the number and types of species recognized as service animals will provide greater predictability for public accommodations as well as added assurance of access for individuals with disabilities who use dogs as service animals. As a consequence, the Department has decided to limit this rule's coverage of service animals to dogs, which are the most common service animals used by individuals with disabilities.

Wild animals, monkeys, and other nonhuman primates. Numerous business entities endorsed a narrow definition of acceptable service animal species, and asserted that there are certain animals (*e.g.*, reptiles) that cannot be trained to do work or perform tasks. Other commenters suggested that the Department should identify excluded animals, such as birds and llamas, in the final rule. Although one commenter noted that wild animals bred in captivity should be permitted to be service animals, the Department has decided to make clear that all wild animals, whether born or bred in captivity or in the wild, are eliminated from coverage as service animals. The Department believes that this approach reduces risks to health or safety attendant with wild animals. Some animals, such as certain nonhuman primates, including certain monkeys, pose a direct threat; their behavior can be unpredictably aggressive and violent without notice or provocation. The American Veterinary Medical Association (AVMA) issued a position statement advising against the use of monkeys as service animals, stating that ''[t]he AVMA does not support the use of nonhuman primates as assistance animals because of animal welfare concerns, and the potential for serious injury and zoonotic [animal to human disease transmission] risks.'' AVMA Position Statement, *Nonhuman Primates as Assistance Animals* (2005), available at *http://www.avma.org/issues/policy/nonhuman_primates.asp* (last visited June 24, 2010).

An organization that trains capuchin monkeys to provide in-home services to individuals with paraplegia and quadriplegia was in substantial agreement with the AVMA's views but requested a limited recognition in the service animal definition for the capuchin monkeys it trains to provide assistance for persons with disabilities. The organization commented that its trained capuchin monkeys undergo scrupulous veterinary examinations to ensure that the animals pose no health risks, and are used by individuals with disabilities exclusively in their homes. The organization acknowledged that the capuchin monkeys it trains are not necessarily suitable for use in a place of public accommodation but noted that the monkeys may need to be used in circumstances that implicate title III coverage, *e.g.*, in the event the handler had to leave home due to an emergency, to visit a veterinarian, or for the initial delivery of the monkey to the individual with a disability. The organization noted that several State and local government entities have local zoning, licensing, health, and safety laws that prohibit non-human primates, and that these prohibitions would prevent individuals with disabilities from using these animals even in their homes.

The organization argued that including capuchin monkeys under the service animal umbrella would make it easier for individuals with disabilities to obtain reasonable modifications of State and local licensing, health, and safety laws that would permit the use of these monkeys. The organization argued that this limited modification to the service animal definition was warranted in view of the services these monkeys perform, which enable many individuals with paraplegia and quadriplegia to live and function with increased independence.

The Department has carefully considered the potential risks associated with the use of nonhuman primates as service animals in places of public accommodation, as well as the information provided to the Department about the significant benefits that trained capuchin monkeys provide to certain individuals with disabilities in residential settings. The Department has determined, however, that nonhuman primates, including capuchin monkeys, will not be recognized as service animals for purposes of this rule because of their potential for disease transmission and unpredictable aggressive behavior. The Department believes that these characteristics make nonhuman primates unsuitable for use as service animals in the context of the wide variety of public settings subject to this rule. As the organization advocating the inclusion of capuchin monkeys acknowledges, capuchin monkeys are not suitable for use in public facilities.

The Department emphasizes that it has decided only that capuchin monkeys will not be included in the definition of service animals for purposes of its regulation implementing the ADA. This decision does not have any effect on the extent to which public accommodations are required to allow the use of such monkeys under other Federal statutes, like the FHAct or the Air Carrier Access Act (ACAA). For example, a public accommodation that also is considered to be a ''dwelling'' may be covered under both the ADA and the FHAct. While the ADA does not require such a public accommodation to admit people with service monkeys, the FHAct may. Under the FHAct an individual with a disability may have the right to have an animal other than a dog in his or her home if the animal qualifies as a ''reasonable accommodation'' that is necessary to afford the individual equal opportunity to use and enjoy a dwelling, assuming that the use of the animal does not pose a direct threat. In some cases, the right of an individual to have an animal under the FHAct may conflict with State or local laws that prohibit all individuals, with or without disabilities, from owning a particular species. However, in this circumstance, an individual who wishes to request a reasonable modification of the State or local law must do so under the FHAct, not the ADA.

Having considered all of the comments about which species should qualify as service

animals under the ADA, the Department has determined the most reasonable approach is to limit acceptable species to dogs.

Size or weight limitations. The vast majority of commenters did not support a size or weight limitation. Commenters were typically opposed to a size or weight limit because many tasks performed by service animals require large, strong dogs. For instance, service animals may perform tasks such as providing balance and support or pulling a wheelchair. Small animals may not be suitable for large adults. The weight of the service animal user is often correlated with the size and weight of the service animal. Others were concerned that adding a size and weight limit would further complicate the difficult process of finding an appropriate service animal. One commenter noted that there is no need for a limit because ''if, as a practical matter, the size or weight of an individual's service animal creates a direct threat or fundamental alteration to a particular public entity or accommodation, there are provisions that allow for the animal's exclusion or removal.'' Some common concerns among commenters in support of a size and weight limit were that a larger animal may be less able to fit in various areas with its handler, such as toilet rooms and public seating areas, and that larger animals are more difficult to control.

Balancing concerns expressed in favor of and against size and weight limitations, the Department has determined that such limitations would not be appropriate. Many individuals of larger stature require larger dogs. The Department believes it would be inappropriate to deprive these individuals of the option of using a service dog of the size required to provide the physical support and stability these individuals may need to function independently. Since large dogs have always served as service animals, continuing their use should not constitute fundamental alterations or impose undue burdens on public accommodations.

Breed limitations. A few commenters suggested that certain breeds of dogs should not be allowed to be used as service animals. Some suggested that the Department should defer to local laws restricting the breeds of dogs that individuals who reside in a community may own. Other commenters opposed breed restrictions, stating that the breed of a dog does not determine its propensity for aggression and that aggressive and non-aggressive dogs exist in all breeds.

The Department does not believe that it is either appropriate or consistent with the ADA to defer to local laws that prohibit certain breeds of dogs based on local concerns that these breeds may have a history of unprovoked aggression or attacks. Such deference would have the effect of limiting the rights of persons with disabilities under the ADA who use certain service animals based on where they live rather than on whether the use of a particular animal poses a direct threat to the health and safety of others. Breed restrictions differ significantly from jurisdiction to jurisdiction. Some jurisdictions have no breed restrictions. Others have restrictions that, while well-meaning, have the unintended effect of screening out the very breeds of dogs that have successfully served as service animals for decades without a history of the type of unprovoked aggression or attacks that would pose a direct threat, *e.g.*, German Shepherds. Other jurisdictions prohibit animals over a certain weight, thereby restricting breeds without invoking an express breed ban. In addition, deference to breed restrictions contained in local laws would have the unacceptable consequence of restricting travel by an individual with a disability who uses a breed that is acceptable and poses no safety hazards in the individual's home jurisdiction but is nonetheless banned by other jurisdictions. Public accommodations have the ability to determine, on a case-by-case basis, whether a particular service animal can be excluded based on that particular animal's actual behavior or history—not based on fears or generalizations about how an animal or breed might behave. This ability to exclude an animal whose behavior or history evidences a direct threat is sufficient to protect health and safety.

Recognition of psychiatric service animals, but not ''emotional support animals.'' The definition of ''service animal'' in the NPRM stated the Department's longstanding position that emotional support animals are not included in the definition of ''service animal.'' The proposed text provided that ''[a]nimals whose sole function is to provide emotional support, comfort, therapy, companionship, therapeutic benefits, or to promote emotional well-being are not service animals.'' 73 FR 34508, 34553 (June 17, 2008).

Many advocacy organizations expressed concern and disagreed with the exclusion of comfort and emotional support animals. Others have been more specific, stating that individuals with disabilities may need their emotional support animals in order to have equal access. Some commenters noted that individuals with disabilities use animals that have not been trained to perform tasks directly related to their disability. These animals do not qualify as service animals under the ADA. These are emotional support or comfort animals.

Commenters asserted that excluding categories such as ''comfort'' and ''emotional support'' animals recognized by laws such as the FHAct or the ACAA is confusing and burdensome. Other commenters noted that emotional support and comfort animals perform an important function, asserting that animal

companionship helps individuals who experience depression resulting from multiple sclerosis.

Some commenters explained the benefits emotional support animals provide, including emotional support, comfort, therapy, companionship, therapeutic benefits, and the promotion of emotional well-being. They contended that without the presence of an emotional support animal in their lives they would be disadvantaged and unable to participate in society. These commenters were concerned that excluding this category of animals will lead to discrimination against and excessive questioning of individuals with non-visible or non-apparent disabilities. Other commenters expressing opposition to the exclusion of individually trained ''comfort'' or ''emotional support'' animals asserted that the ability to soothe or de-escalate and control emotion is ''work'' that benefits the individual with the disability.

Many commenters requested that the Department carve out an exception that permits current or former members of the military to use emotional support animals. They asserted that a significant number of service members returning from active combat duty have adjustment difficulties due to combat, sexual assault, or other traumatic experiences while on active duty. Commenters noted that some current or former members of the military service have been prescribed animals for conditions such as PTSD. One commenter stated that service women who were sexually assaulted while in the military use emotional support animals to help them feel safe enough to step outside their homes. The Department recognizes that many current and former members of the military have disabilities as a result of service-related injuries that may require emotional support and that such individuals can benefit from the use of an emotional support animal and could use such animal in their home under the FHAct. However, having carefully weighed the issues, the Department believes that its final rule appropriately addresses the balance of issues and concerns of both the individual with a disability and the public accommodation. The Department also notes that nothing in this part prohibits a public entity from allowing current or former military members or anyone else with disabilities to utilize emotional support animals if it wants to do so.

Commenters asserted the view that if an animal's ''mere presence'' legitimately provides such benefits to an individual with a disability and if those benefits are necessary to provide equal opportunity given the facts of the particular disability, then such an animal should qualify as a ''service animal.'' Commenters noted that the focus should be on the nature of a person's disability, the difficulties the disability may impose and whether the requested accommodation would legitimately address those difficulties, not on evaluating the animal involved. The Department understands this approach has benefitted many individuals under the FHAct and analogous State law provisions, where the presence of animals poses fewer health and safety issues and where emotional support animals provide assistance that is unique to residential settings. The Department believes, however, that the presence of such animals is not required in the context of public accommodations, such as restaurants, hospitals, hotels, retail establishments, and assembly areas.

Under the Department's previous regulatory framework, some individuals and entities assumed that the requirement that service animals must be individually trained to do work or perform tasks excluded all individuals with mental disabilities from having service animals. Others assumed that any person with a psychiatric condition whose pet provided comfort to them was covered by the 1991 title III regulation. The Department reiterates that psychiatric service animals that are trained to do work or perform a task for individuals whose disability is covered by the ADA are protected by the Department's present regulatory approach. Psychiatric service animals can be trained to perform a variety of tasks that assist individuals with disabilities to detect the onset of psychiatric episodes and ameliorate their effects. Tasks performed by psychiatric service animals may include reminding individuals to take medicine, providing safety checks or room searches for individuals with PTSD, interrupting self-mutilation, and removing disoriented individuals from dangerous situations.

The difference between an emotional support animal and a psychiatric service animal is the work or tasks that the animal performs. Traditionally, service dogs worked as guides for individuals who were blind or had low vision. Since the original regulation was promulgated, service animals have been trained to assist individuals with many different types of disabilities.

In the final rule, the Department has retained its position on the exclusion of emotional support animals from the definition of ''service animal.'' The definition states that ''[t]he provision of emotional support, well-being, comfort, or companionship * * * do[es] not constitute work or tasks for the purposes of this definition.'' The Department notes, however, that the exclusion of emotional support animals from coverage in the final rule does not mean that individuals with psychiatric or mental disabilities cannot use service animals that meet the regulatory definition. The final rule defines service animal as follows: ''Service animal means any dog that is individually trained to do work

or perform tasks for the benefit of an individual with a disability, including a physical, sensory, psychiatric, intellectual, or other mental disability.'' This language simply clarifies the Department's longstanding position.

The Department's position is based on the fact that the title II and title III regulations govern a wider range of public settings than the housing and transportation settings for which the Department of Housing and Urban Development (HUD) and the DOT regulations allow emotional support animals or comfort animals. The Department recognizes that there are situations not governed by the title II and title III regulations, particularly in the context of residential settings and transportation, where there may be a legal obligation to permit the use of animals that do not qualify as service animals under the ADA, but whose presence nonetheless provides necessary emotional support to persons with disabilities. Accordingly, other Federal agency regulations, case law, and possibly State or local laws governing those situations may provide appropriately for increased access for animals other than service animals as defined under the ADA. Public officials, housing providers, and others who make decisions relating to animals in residential and transportation settings should consult the Federal, State, and local laws that apply in those areas (*e.g.*, the FHAct regulations of HUD and the ACAA) and not rely on the ADA as a basis for reducing those obligations.

Retain term ''service animal.'' Some commenters asserted that the term ''assistance animal'' is a term of art and should replace the term ''service animal''; however, the majority of commenters preferred the term ''service animal'' because it is more specific. The Department has decided to retain the term ''service animal'' in the final rule. While some agencies, like HUD, use the terms ''assistance animal,'' ''assistive animal,'' or ''support animal,'' these terms are used to denote a broader category of animals than is covered by the ADA. The Department has decided that changing the term used in the final rule would create confusion, particularly in view of the broader parameters for coverage under the FHAct, *cf.* Preamble to HUD's Final Rule for Pet Ownership for the Elderly and Persons with Disabilities, 73 FR 63834–38 (Oct. 27, 2008); HUD Handbook No. 4350.3 Rev–1, Chapter 2, *Occupancy Requirements of Subsidized Multifamily Housing Programs* (June 2007), available at *http://www.hud.gov/offices/adm/hudclips/handbooks/hsgh/4350.3* (last visited June 24, 2010). Moreover, as discussed above, the Department's definition of ''service animal'' in the final rule does not affect the rights of individuals with disabilities who use assistance animals in their homes under the FHAct or who use ''emotional support animals'' that are covered under the ACAA and its implementing regulations. *See* 14 CFR 382.7 *et seq.; see also* Department of Transportation, *Guidance Concerning Service Animals in Air Transportation,* 68 FR 24874, 24877 (May 9, 2003) (discussing accommodation of service animals and emotional support animals on aircraft).

''Video Remote Interpreting (VRI) Services''

In the NPRM, the Department proposed adding ''Video Interpreting Services (VIS)'' to the list of auxiliary aids available to provide effective communication. In the preamble to the NPRM, VIS was defined as ''a technology composed of a video phone, video monitors, cameras, a high-speed Internet connection, and an interpreter. The video phone provides video transmission to a video monitor that permits the individual who is deaf or hard of hearing to view and sign to a video interpreter (*i.e.*, a live interpreter in another location), who can see and sign to the individual through a camera located on or near the monitor, while others can communicate by speaking. The video monitor can display a split screen of two live images, with the interpreter in one image and the individual who is deaf or hard of hearing in the other image.'' 73 FR 34508, 34522 (June 17, 2008). Comments from advocacy organizations and individuals unanimously requested that the Department use the term ''video remote interpreting (VRI),'' instead of VIS, for consistency with Federal Communications Commission (FCC) regulations, FCC Public Notice, DA–0502417 (Sept. 7, 2005), and with common usage by consumers. The Department has made that change throughout the regulation to avoid confusion and to make the regulation more consistent with existing regulations.

Many commenters also requested that the Department distinguish between VRI and ''video relay service (VRS).'' Both VRI and VRS use a remote interpreter who is able to see and communicate with a deaf person and a hearing person, and all three individuals may be connected by a video link. VRI is a fee-based interpreting service conveyed via videoconferencing where at least one person, typically the interpreter, is at a separate location. VRI can be provided as an on-demand service or by appointment. VRI normally involves a contract in advance for the interpreter who is usually paid by the covered entity.

VRS is a telephone service that enables persons with disabilities to use the telephone to communicate using video connections and is a more advanced form of relay service than the traditional voice to text telephones (TTY) relay systems that were recognized in the 1991 title III regulation. More specifically, VRS is a video relay service using interpreters connected to callers by video hook-up and is designed to provide telephone

services to persons who are deaf and use American Sign Language that are functionally equivalent to those services provided to users who are hearing. VRS is funded through the Interstate Telecommunications Relay Services Fund and overseen by the FCC. *See* 47 CFR 64.601(a)(26). There are no fees for callers to use the VRS interpreters and the video connection, although there may be relatively inexpensive initial costs to the title III entities to purchase the videophone or camera for on-line video connection, or other equipment to connect to the VRS service. The FCC has made clear that VRS functions as a telephone service and is not intended to be used for interpreting services where both parties are in the same room; the latter is reserved for VRI. The Department agrees that VRS cannot be used as a substitute for in-person interpreters or for VRI in situations that would not, absent one party's disability, entail use of the telephone.

Many commenters strongly recommended limiting the use of VRI to circumstances where it will provide effective communication. Commenters from advocacy groups and persons with disabilities expressed concern that VRI may not always be appropriate to provide effective communication, especially in hospitals and emergency rooms. Examples were provided of patients who are unable to see the video monitor because they are semi-conscious or unable to focus on the video screen; other examples were given of cases where the video monitor is out of the sightline of the patient or the image is out of focus; still other examples were given of patients who could not see the image because the signal was interrupted, causing unnatural pauses in the communication, or the image was grainy or otherwise unclear. Many commenters requested more explicit guidelines on the use of VRI and some recommended requirements for equipment maintenance, high-speed, wide-bandwidth video links using dedicated lines or wireless systems, and training of staff using VRI, especially in hospital and health care situations. Several major organizations requested a requirement to include the interpreter's face, head, arms, hands, and eyes in all transmissions.

After consideration of the comments and the Department's own research and experience, the Department has determined that VRI can be an effective method of providing interpreting services in certain circumstances, but not in others. For example, VRI should be effective in many situations involving routine medical care, as well as in the emergency room where urgent care is important, but no in-person interpreter is available; however, VRI may not be effective in situations involving surgery or other medical procedures where the patient is limited in his or her ability to see the video screen. Similarly, VRI may not be effective in situations where there are multiple people in a room and the information exchanged is highly complex and fast paced. The Department recognizes that in these and other situations, such as where communication is needed for persons who are deaf-blind, it may be necessary to summon an in-person interpreter to assist certain individuals. To ensure that VRI is effective in situations where it is appropriate, the Department has established performance standards in §36.303(f).

SUBPART B—GENERAL REQUIREMENTS

Section 36.208(b) Direct Threat

The Department has revised the language of §36.208(b) (formerly §36.208(c) in the 1991 title III regulation) to include consideration of whether the provision of auxiliary aids or services will mitigate the risk that an individual will pose a direct threat to the health or safety of others. Originally, the reference to auxiliary aids or services as a mitigating factor was part of §36.208. However, that reference was removed from the section when, for editorial purposes, the Department removed the definition of ''direct threat'' from §36.208 and placed it in §36.104. The Department has put the reference to auxiliary aids or services as a mitigating factor back into §36.208(b) in order to maintain consistency with the current regulation.

Section 36.211 Maintenance of Accessible Features

Section 36.211 of the 1991 title III regulation provides that a public accommodation must maintain in operable working condition those features of facilities and equipment that are required to be readily accessible to and usable by individuals with disabilities. 28 CFR 36.211. In the NPRM, the Department clarified the application of this provision and proposed one change to the section to address the discrete situation in which the scoping requirements provided in the 2010 Standards reduce the number of required elements below the requirements of the 1991 Standards. In that discrete event, a public accommodation may reduce such accessible features in accordance with the requirements in the 2010 Standards.

The Department received only four comments on this proposed amendment. None of the commenters opposed the change. In the final rule, the Department has revised the section to make it clear that if the 2010 Standards reduce either the technical requirements or the number of required accessible elements below that required by the 1991 Standards, then the public accommodation may reduce the technical requirements or the number of accessible elements in a

covered facility in accordance with the requirements of the 2010 Standards. One commenter, an association of convenience stores, urged the Department to expand the language of the section to include restocking of shelves as a permissible activity for isolated or temporary interruptions in service or access. It is the Department's position that a temporary interruption that blocks an accessible route, such as restocking of shelves, is already permitted by existing §36.211(b), which clarifies that ''isolated or temporary interruptions in service or access due to maintenance or repairs'' are permitted. Therefore, the Department will not make any additional changes in the language of §36.211 other than those discussed in the preceding paragraph.

SUBPART C—SPECIFIC REQUIREMENTS

Section 36.302 Modifications in Policies, Practices, or Procedures

Section 36.302(c) Service Animals

Section 36.302(c)(1) of the 1991 title III regulation states that ''[g]enerally, a public accommodation shall modify [its] policies, practices, or procedures to permit the use of service animals by an individual with a disability.'' Section 36.302(c)(2) of the 1991 title III regulation states that ''[n]othing in this part requires a public accommodation to supervise or care for a service animal.'' The Department has decided to retain the scope of the 1991 title III regulation while clarifying the Department's longstanding policies and interpretations. Toward that end, the final rule has been revised to include the Department's policy interpretations as outlined in published technical assistance, *Commonly Asked Questions about Service Animals in Places of Business* (1996), available at *http://www.ada.gov/qasrvc.htm*, and *ADA Guide for Small Businesses* (1999), available at *http://www.ada.gov/smbustxt.htm*, and to add that a public accommodation may exclude a service animal in certain circumstances where the service animal fails to meet certain behavioral standards. The Department received extensive comments in response to proposed §36.302(c) from individuals, disability advocacy groups, organizations involved in training service animals, and public accommodations. Those comments and the Department's response are discussed below.

Exclusion of service animals. The 1991 regulatory provision in §36.302(c) addresses reasonable modification and remains unchanged in the final rule. However, based on comments received and the Department's analysis, the Department has decided to clarify those circumstances where otherwise eligible service animals may be excluded by public accommodations.

In the NPRM, in §36.302(c)(2)(i), the Department proposed that a public accommodation may ask an individual with a disability to remove a service animal from the place of public accommodation if ''[t]he animal is out of control and the animal's handler does not take effective action to control it.'' 73 FR 34508, 34553 (June 17, 2008). The Department has long held that a service animal must be under the control of the handler at all times. Commenters overwhelmingly were in favor of this language, but noted that there are occasions when service animals are provoked to disruptive or aggressive behavior by agitators or troublemakers, as in the case of a blind individual whose service dog is taunted or pinched. While all service animals are trained to ignore and overcome these types of incidents, misbehavior in response to provocation is not always unreasonable. In circumstances where a service animal misbehaves or responds reasonably to a provocation or injury, the public accommodation must give the handler a reasonable opportunity to gain control of the animal. Further, if the individual with a disability asserts that the animal was provoked or injured, or if the public accommodation otherwise has reason to suspect that provocation or injury has occurred, the public accommodation should seek to determine the facts and, if provocation or injury occurred, the public accommodation should take effective steps to prevent further provocation or injury, which may include asking the provocateur to leave the place of public accommodation. This language is unchanged in the final rule.

The NPRM also proposed language at §36.302(c)(2)(ii) to permit a public accommodation to exclude a service animal if the animal is not housebroken (*i.e.*, trained so that, absent illness or accident, the animal controls its waste elimination) or the animal's presence or behavior fundamentally alters the nature of the service the public accommodation provides (*e.g.*, repeated barking during a live performance). Several commenters were supportive of this NPRM language, but cautioned against overreaction by the public accommodation in these instances. One commenter noted that animals get sick, too, and that accidents occasionally happen. In these circumstances, simple clean up typically addresses the incident. Commenters noted that the public accommodation must be careful when it excludes a service animal on the basis of ''fundamental alteration,'' asserting for example, that a public accommodation should not exclude a service animal for barking in an environment where other types of noise, such as loud cheering or a child crying, is tolerated. The Department maintains that the appropriateness of an exclusion can be assessed by reviewing how a public accommodation addresses comparable situations that do not involve a service animal. The Department has retained in §36.302(c)(2) of the final rule the

exception requiring animals to be housebroken. The Department has not retained the specific NPRM language stating that animals can be excluded if their presence or behavior fundamentally alters the nature of the service provided by the public accommodation, because the Department believes that this exception is covered by the general reasonable modification requirement contained in §36.302(c)(1).

The NPRM also proposed in §36.302(c)(2)(iii) that a service animal can be excluded where ''[t]he animal poses a direct threat to the health or safety of others that cannot be eliminated by reasonable modifications.'' 73 FR 34508, 34553 (June 17, 2008). Commenters were universally supportive of this provision as it makes express the discretion of a public accommodation to exclude a service animal that poses a direct threat. Several commenters cautioned against the overuse of this provision and suggested that the Department provide an example of the rule's application. The Department has decided not to include regulatory language specifically stating that a service animal can be excluded if it poses a direct threat. The Department believes that the direct threat provision in §36.208 already provides this exception to public accommodations.

Access to a public accommodation following the proper exclusion of a service animal. The NPRM proposed that in the event a public accommodation properly excludes a service animal, the public accommodation must give the individual with a disability the opportunity to obtain the goods and services of the public accommodation without having the service animal on the premises. Most commenters welcomed this provision as a common sense approach. These commenters noted that they do not wish to preclude individuals with disabilities from the full and equal enjoyment of the goods and services simply because of an isolated problem with a service animal. The Department has elected to retain this provision in §36.302(c)(2).

Other requirements. The NPRM also proposed that the regulation include the following requirements: that the work or tasks performed by the service animal must be directly related to the handler's disability; that a service animal must be individually trained to do work or perform a task, be housebroken, and be under the control of the handler; and that a service animal must have a harness, leash, or other tether. Most commenters addressed at least one of these issues in their responses. Most agreed that these provisions are important to clarify further the 1991 service animal regulation. The Department has moved the requirement that the work or tasks performed by the service animal must be related directly to the individual's disability to the definition of 'service animal' in §36.104. In addition, the Department has modified the proposed language relating to the handler's control of the animal with a harness, leash, or other tether to state that ''[a] service animal shall have a harness, leash, or other tether, unless either the handler is unable because of a disability to use a harness, leash, or other tether, or the use of a harness, leash, or other tether would interfere with the service animal's safe, effective performance of work or tasks, in which case the service animal must be otherwise under the handler's control (*e.g.*, voice control, signals, or other effective means).'' The Department has retained the requirement that the service animal must be individually trained, as well as the requirement that the service animal be housebroken.

Responsibility for supervision and care of a service animal. The 1991 title III regulation, in §36.302(c)(2), states that ''[n]othing in this part requires a public accommodation to supervise or care for a service animal.'' The NPRM modified this language to state that ''[a] public accommodation is not responsible for caring for or supervising a service animal.'' 73 FR 34508, 34553 (June 17, 2008). Most commenters did not address this particular provision. The Department notes that there are occasions when a person with a disability is confined to bed in a hospital for a period of time. In such an instance, the individual may not be able to walk or feed the service animal. In such cases, if the individual has a family member, friend, or other person willing to take on these responsibilities in the place of the individual with a disability, the individual's obligation to be responsible for the care and supervision of the service animal would be satisfied. The language of this section is retained, with minor modifications, in §36.302(c)(5) of the final rule.

Inquiries about service animals. The NPRM proposed language at §36.302(c)(6) setting forth parameters about how a public accommodation may determine whether an animal qualifies as a service animal. The proposed section stated that a public accommodation may ask if the animal is required because of a disability and what task or work the animal has been trained to do but may not require proof of service animal certification or licensing. Such inquiries are limited to eliciting the information necessary to make a decision without requiring disclosure of confidential disability-related information that a public accommodation does not need.

This language is consistent with the policy guidance outlined in two Department publications, *Commonly Asked Questions about Service Animals in Places of Business* (1996), available at *http://www.ada.gov/qasrvc.htm*, and *ADA Guide for Small Businesses* (1999), available at *http://www.ada.gov/smbustxt.htm*.

Although some commenters contended that the NPRM service animal provisions leave unaddressed the issue of how a public accommodation can distinguish between a

psychiatric service animal, which is covered under the final rule, and a comfort animal, which is not, other commenters noted that the Department's published guidance has helped public accommodations to distinguish between service animals and pets on the basis of an individual's response to these questions. Accordingly, the Department has retained the NPRM language incorporating its guidance concerning the permissible questions into the final rule.

Some commenters suggested that a title III entity be allowed to require current documentation, no more than one year old, on letterhead from a mental health professional stating the following: (1) That the individual seeking to use the animal has a mental health-related disability; (2) that having the animal accompany the individual is necessary to the individual's mental health or treatment or to assist the person otherwise; and (3) that the person providing the assessment of the individual is a licensed mental health professional and the individual seeking to use the animal is under that individual's professional care. These commenters asserted that this will prevent abuse and ensure that individuals with legitimate needs for psychiatric service animals may use them. The Department believes that this proposal would treat persons with psychiatric, intellectual, and other mental disabilities less favorably than persons with physical or sensory disabilities. The proposal would also require persons with disabilities to obtain medical documentation and carry it with them any time they seek to engage in ordinary activities of daily life in their communities—something individuals without disabilities have not been required to do. Accordingly, the Department has concluded that a documentation requirement of this kind would be unnecessary, burdensome, and contrary to the spirit, intent, and mandates of the ADA.

Service animal access to areas of a public accommodation. The NPRM proposed at §36.302(c)(7) that an individual with a disability who uses a service animal has the same right of access to areas of a public accommodation as members of the public, program participants, and invitees. Commenters indicated that allowing individuals with disabilities to go with their service animals into the same areas as members of the public, program participants, clients, customers, patrons, or invitees is accepted practice by most places of public accommodation. The Department has included a slightly modified version of this provision in §36.302(c)(7) of the final rule.

The Department notes that under the final rule, a healthcare facility must also permit a person with a disability to be accompanied by a service animal in all areas of the facility in which that person would otherwise be allowed. There are some exceptions, however. The Department follows the guidance of the Centers for Disease Control and Prevention (CDC) on the use of service animals in a hospital setting. Zoonotic diseases can be transmitted to humans through bites, scratches, direct contact, arthropod vectors, or aerosols.

Consistent with CDC guidance, it is generally appropriate to exclude a service animal from limited-access areas that employ general infection-control measures, such as operating rooms and burn units. *See* Centers for Disease Control and Prevention, *Guidelines for Environmental Infection Control in Health-Care Facilities: Recommendations of CDC and the Healthcare Infection Control Practices Advisory Committee* (June 2003), available at *http://www.cdc.gov/hicpac/pdf/guidelines/eic_in_HCF_03.pdf* (last visited June 24, 2010). A service animal may accompany its handler to such areas as admissions and discharge offices, the emergency room, inpatient and outpatient rooms, examining and diagnostic rooms, clinics, rehabilitation therapy areas, the cafeteria and vending areas, the pharmacy, restrooms, and all other areas of the facility where healthcare personnel, patients, and visitors are permitted without taking added precautions.

Prohibition against surcharges for use of a service animal. In the NPRM, the Department proposed to incorporate the previously mentioned policy guidance, which prohibits the assessment of a surcharge for the use of a service animal, into proposed §36.302(c)(8). Several commenters agreed that this provision makes clear the obligation of a place of public accommodation to admit an individual with a service animal without surcharges, and that any additional costs imposed should be factored into the overall cost of doing business and passed on as a charge to all participants, rather than an individualized surcharge to the service animal user. Commenters also noted that service animal users cannot be required to comply with other requirements that are not generally applicable to other persons. If a public accommodation normally charges individuals for the damage they cause, an individual with a disability may be charged for damage caused by his or her service animals. The Department has retained this language, with minor modifications, in the final rule at §36.302(c)(8).

Training requirement. Certain commenters recommended the adoption of formal training requirements for service animals. The Department has rejected this approach and will not impose any type of formal training requirements or certification process, but will continue to require that service animals be individually trained to do work or perform tasks for the benefit of an individual with a disability. While some groups have urged the Department to modify this position, the Department has determined that

such a modification would not serve the full array of individuals with disabilities who use service animals, since individuals with disabilities may be capable of training, and some have trained, their service animal to perform tasks or do work to accommodate their disability. A training and certification requirement would increase the expense of acquiring a service animal and might limit access to service animals for individuals with limited financial resources.

Some commenters proposed specific behavior or training standards for service animals, arguing that without such standards, the public has no way to differentiate between untrained pets and service animals. Many of the suggested behavior or training standards were lengthy and detailed. The Department believes that this rule addresses service animal behavior sufficiently by including provisions that address the obligations of the service animal user and the circumstances under which a service animal may be excluded, such as the requirements that an animal be housebroken and under the control of its handler.

Miniature horses. The Department has been persuaded by commenters and the available research to include a provision that would require public accommodations to make reasonable modifications to policies, practices, or procedures to permit the use of a miniature horse by a person with a disability if the miniature horse has been individually trained to do work or perform tasks for the benefit of the individual with a disability. The traditional service animal is a dog, which has a long history of guiding individuals who are blind or have low vision, and over time dogs have been trained to perform an even wider variety of services for individuals with all types of disabilities. However, an organization that developed a program to train miniature horses, modeled on the program used for guide dogs, began training miniature horses in 1991.

Although commenters generally supported the species limitations proposed in the NPRM, some were opposed to the exclusion of miniature horses from the definition of a service animal. These commenters noted that these animals have been providing assistance to persons with disabilities for many years. Miniature horses were suggested by some commenters as viable alternatives to dogs for individuals with allergies, or for those whose religious beliefs preclude the use of dogs. Another consideration mentioned in favor of the use of miniature horses is the longer life span and strength of miniature horses in comparison to dogs. Specifically, miniature horses can provide service for more than 25 years while dogs can provide service for approximately seven years, and, because of their strength, miniature horses can provide services that dogs cannot provide. Accordingly, use of miniature horses reduces the cost involved to retire, replace, and train replacement service animals.

The miniature horse is not one specific breed, but may be one of several breeds, with distinct characteristics that produce animals suited to service animal work. These animals generally range in height from 24 inches to 34 inches measured to the withers, or shoulders, and generally weigh between 70 and 100 pounds. These characteristics are similar to those of large breed dogs, such as Labrador Retrievers, Great Danes, and Mastiffs. Similar to dogs, miniature horses can be trained through behavioral reinforcement to be ''housebroken.'' Most miniature service horse handlers and organizations recommend that when the animals are not doing work or performing tasks, the miniature horses should be kept outside in a designated area instead of indoors in a house.

According to information provided by an organization that trains service horses, these miniature horses are trained to provide a wide array of services to their handlers, primarily guiding individuals who are blind or have low vision, pulling wheelchairs, providing stability and balance for individuals with disabilities that impair the ability to walk, and supplying leverage that enables a person with a mobility disability to get up after a fall. According to the commenter, miniature horses are particularly effective for large stature individuals. The animal can be trained to stand (and in some cases, lie down) at the handler's feet in venues where space is at a premium, such as assembly areas or inside some vehicles that provide public transportation. Some individuals with disabilities have traveled by train and have flown commercially with their miniature horses.

The miniature horse is not included in the definition of service animal, which is limited to dogs. However, the Department has added a specific provision at §36.302(c)(9) of the final rule covering miniature horses. Under this provision, public accommodations must make reasonable modifications in policies, practices, or procedures to permit the use of a miniature horse by an individual with a disability if the miniature horse has been individually trained to do work or perform tasks for the benefit of the individual with a disability. The public accommodation may take into account a series of assessment factors in determining whether to allow a miniature horse into a specific facility. These include the type, size, and weight of the miniature horse, whether the handler has sufficient control of the miniature horse, whether the miniature horse is housebroken, and whether the miniature horse's presence in a specific facility compromises legitimate safety requirements that are necessary for safe operation. In addition, paragraphs

(c)(3)B–(8) of this section, which are applicable to dogs, also apply to miniature horses.

Ponies and full-size horses are not covered by §36.302(c)(9). Also, because miniature horses can vary in size and can be larger and less flexible than dogs, covered entities may exclude this type of service animal if the presence of the miniature horse, because of its larger size and lower level of flexibility, results in a fundamental alteration to the nature of the services provided.

Section 36.302(e) Hotel Reservations

Section 36.302 of the 1991 title III regulation requires public accommodations to make reasonable modifications in policies, practices, or procedures when such modifications are necessary to afford access to any goods, services, facilities, privileges, advantages, or accommodations, unless the entity can demonstrate that making such modifications would fundamentally alter the nature of such goods, services, facilities, privileges, advantages, or accommodations. Hotels, timeshare resorts, and other places of lodging are subject to this requirement and must make reasonable modifications to reservations policies, practices, or procedures when necessary to ensure that individuals with disabilities are able to reserve accessible hotel rooms with the same efficiency, immediacy, and convenience as those who do not need accessible guest rooms.

Each year the Department receives many complaints concerning failed reservations. Most of these complaints involve individuals who have reserved an accessible hotel room only to discover upon arrival that the room they reserved is either not available or not accessible. Although problems with reservations services were not addressed in the ANPRM, commenters independently noted an ongoing problem with hotel reservations and urged the Department to provide regulatory guidance. In response, the Department proposed specific language in the NPRM to address hotel reservations. In addition, the Department posed several questions regarding the current practices of hotels and other reservations services including questions about room guarantees and the holding and release of accessible rooms. The Department also questioned whether public accommodations that provide reservations services for a place or places of lodging but do not own, lease (or lease to), or operate a place of lodging—referred to in this discussion as ''third-party reservations services''—should also be subject to the NPRM's proposals concerning hotel reservations.

Although reservations issues were discussed primarily in the context of traditional hotels, the new rule modifies the definition of ''places of lodging'' to clarify the scope of the rule's coverage of rental accommodations in timeshare properties, condominium hotels, and mixed-use and corporate hotel facilities that operate as places of public accommodation (as that term is now defined in §36.104), and the Department received detailed comments, discussed below, regarding the application of reservations requirements to this category of rental accommodations.

General rule on reservations. Section 36.302(e)(1) of the NPRM required a public accommodation that owns, leases (or leases to), or operates a place of lodging to:

Modify its policies, practices, or procedures to ensure that individuals with disabilities can make reservations, including reservations made by telephone, in-person, or through a third party, for accessible guest rooms during the same hours and in the same manner as individuals who do not need accessible rooms.

73 FR 34508, 34553 (June 17, 2008).

Most individual commenters and organizations that represent individuals with disabilities strongly supported the requirement that individuals with disabilities should be able to make reservations for accessible guest rooms during the same hours and in the same manner as individuals who do not need accessible rooms. In many cases individuals with disabilities expressed frustration because, while they are aware of improvements in architectural access brought about as a result of the ADA, they are unable to take advantage of these improvements because of shortcomings in current hotel reservations systems. A number of these commenters pointed out that it can be difficult or impossible to obtain information about accessible rooms and hotel features and that even when information is provided it often is found to be incorrect upon arrival. They also noted difficulty reserving accessible rooms and the inability to guarantee or otherwise ensure that the appropriate accessible room is available when the guest arrives. The ability to obtain information about accessible guest rooms, to make reservations for accessible guest rooms in the same manner as other guests, and to be assured of an accessible room upon arrival was of critical importance to these commenters.

Other commenters, primarily hotels, resort developers, travel agencies, and organizations commenting on their behalf, did not oppose the general rule on reservations, but recommended that the language requiring that reservations be made ''in the same manner'' be changed to require that reservations be made ''in a substantially similar manner.'' These commenters argued that hotel reservations are made in many different ways and through a variety of systems. In general, they argued that current reservations database systems may not contain sufficient information to permit guests, travel agents, or other third-party reservations services to select the most appropriate room

without consulting directly with the hotel, and that updating these systems might be expensive and time consuming. They also noted that in some cases, hotels do not always automatically book accessible rooms when requested to do so. Instead, guests may select from a menu of accessibility and other room options when making reservations. This information is transmitted to the hotel's reservations staff, who then contact the individual to verify the guest's accessibility needs. Only when such verification occurs will the accessible room be booked.

The Department is not persuaded that individuals who need to reserve accessible rooms cannot be served in the same manner as those who do not, and it appears that there are hotels of all types and sizes that already meet this requirement. Further, the Department has been able to accomplish this goal in settlement agreements resolving complaints about this issue. As stated in the preamble to the NPRM, basic nondiscrimination principles mandate that individuals with disabilities should be able to reserve hotel rooms with the same efficiency, immediacy, and convenience as those who do not need accessible guest rooms. The regulation does not require reservations services to create new methods for reserving hotel rooms or available timeshare units; instead, covered entities must make the modifications needed to ensure that individuals who need accessible rooms are able to reserve them in the same manner as other guests. If, for example, hotel reservations are not final until all hotel guests have been contacted by the hotel to discuss the guest's needs, a hotel may follow the same process when reserving accessible rooms. Therefore, the Department declines to change this language, which has been moved to §36.302(e)(1)(i). However, in response to the commenters who recommended a transition period that would allow reservations services time to modify existing reservations systems to meet the requirements of this rule, §36.302(e)(3) now provides a 18-month transition period before the requirements of §36.302(e)(1) will be enforced.

Hotels and organizations commenting on their behalf also requested that the language be changed to eliminate any liability for reservations made through third parties, arguing that they are unable to control the actions of unrelated parties. The rule, both as proposed and as adopted, requires covered public accommodations to ensure that reservations made on their behalf by third parties are made in a manner that results in parity between those who need accessible rooms and those who do not.

Hotels and other places of lodging that use third-party reservations services must make reasonable efforts to make accessible rooms available through at least some of these services and must provide these third-party services with information concerning the accessible features of the hotel and the accessible rooms. To the extent a hotel or other place of lodging makes available such rooms and information to a third-party reservation provider, but the third party fails to provide the information or rooms to people with disabilities in accordance with this section, the hotel or other place of lodging will not be responsible.

Identification of accessible features in hotels and guest rooms. NPRM §36.302(e)(2) required public accommodations that provide hotel reservations services to identify and describe the accessible features in the hotels and guest rooms offered through that service. This requirement is essential to ensure that individuals with disabilities receive the information they need to benefit from the services offered by the place of lodging. As a practical matter, a public accommodation's designation of a guest room as ''accessible'' will not ensure necessarily that the room complies with all of the 1991 Standards. In older facilities subject to barrier removal requirements, strict compliance with the 1991 Standards is not required. Instead, public accommodations must remove barriers to the extent that it is readily achievable to do so.

Further, hotel rooms that are in full compliance with current standards may differ, and individuals with disabilities must be able to ascertain which features—in new and existing facilities—are included in the hotel's accessible guest rooms. For example, under certain circumstances, an accessible hotel bathroom may meet accessibility requirements with either a bathtub or a roll-in shower. The presence or absence of particular accessible features such as these may be the difference between a room that is usable by a particular person with a disability and one that is not.

Individuals with disabilities strongly supported this requirement. In addition to the importance of information about specific access features, several commenters pointed out the importance of knowing the size and number of beds in a room. Many individuals with disabilities travel with family members, personal care assistants, or other companions and require rooms with at least two beds. Although most hotels provide this information when generally categorizing the type or class of room (*e.g.*, deluxe suite with king bed), as described below, all hotels should consider the size and number of beds to be part of the basic information they are required to provide.

Comments made on behalf of reservations services expressed concern that unless the word ''hotels'' is stricken from the text, §36.302(e)(2) of the NPRM essentially would require reservations systems to include a full accessibility report on each hotel or resort property in its system. Along these lines, commenters also suggested that the Department identify the specific accessible features

of hotel rooms that must be described in the reservations system. For example, commenters suggested limiting features that must be included to bathroom type (tub or roll-in shower) and communications features.

The Department recognizes that a reservations system is not intended to be an accessibility survey. However, specific information concerning accessibility features is essential to travelers with disabilities. Because of the wide variations in the level of accessibility that travelers will encounter, the Department cannot specify what information must be included in every instance. For hotels that were built in compliance with the 1991 Standards, it may be sufficient to specify that the hotel is accessible and, for each accessible room, to describe the general type of room (*e.g.*, deluxe executive suite), the size and number of beds (*e.g.*, two queen beds), the type of accessible bathing facility (*e.g.*, roll-in shower), and communications features available in the room (*e.g.*, alarms and visual notification devices). Based on that information, many individuals with disabilities will be comfortable making reservations.

For older hotels with limited accessibility features, information about the hotel should include, at a minimum, information about accessible entrances to the hotel, the path of travel to guest check-in and other essential services, and the accessible route to the accessible room or rooms. In addition to the room information described above, these hotels should provide information about important features that do not comply with the 1991 Standards. For example, if the door to the ''accessible'' room or bathroom is narrower than required, this information should be included (*e.g.*, door to guest room measures 30 inches clear). This width may not meet current standards but may be adequate for some wheelchair users who use narrower chairs. In many cases, older hotels provide services through alternatives to barrier removal, for example, by providing check-in or concierge services at a different, accessible location. Reservations services for these entities should include this information and provide a way for guests to contact the appropriate hotel employee for additional information. To recognize that the information and level of detail needed will vary based on the nature and age of the facility, §36.302(e)(2) has been moved to §36.302(e)(1)(ii) in the final rule and modified to require reservations services to:

Identify and describe accessible features in the hotels and guest rooms offered through its reservations service *in enough detail to reasonably permit individuals with disabilities to assess independently whether a given hotel or guest room meets his or her accessibility needs.* [Emphasis added]

As commenters representing hotels have described, once reservations are made, some hotels may wish to contact the guest to offer additional information and services. Or, many individuals with disabilities may wish to contact the hotel or reservations service for more detailed information. At that point, trained staff (including staff located on-site at the hotel and staff located off-site at a reservations center) should be available to provide additional information such as the specific layout of the room and bathroom, shower design, grab-bar locations, and other amenities available (*e.g.*, bathtub bench).

In the NPRM, the Department sought guidance concerning whether this requirement should be applied to third-party reservations services. Comments made by or on behalf of hotels, resort managers, and other members of the lodging and resort industry pointed out that, in most cases, these third parties do not have direct access to this information and must obtain it from the hotel or other place of lodging. Because third-party reservations services must rely on the place of lodging to provide the requisite information and to ensure that it is accurate and timely, the Department has declined to extend this requirement directly to third-party reservations services.

Hold and release of accessible guest rooms. The Department has addressed the hold and release of accessible guest rooms in settlement agreements and recognizes that current practices vary widely. The Department is concerned about current practices by which accessible guest rooms are released to the general public even though the hotel is not sold out. In such instances, individuals with disabilities may be denied an equal opportunity to benefit from the services offered by the public accommodation, *i.e.*, a hotel guest room. In the NPRM, the Department requested information concerning the current practices of hotels and third-party reservations services with respect to (1) holding accessible rooms for individuals with disabilities and (2) releasing accessible rooms to individuals without disabilities.

Individuals with disabilities and organizations commenting on their behalf strongly supported requiring accessible rooms to be held back for rental by individuals with disabilities. In some cases commenters supported holding back all accessible rooms until all non-accessible rooms were rented. Others supported holding back accessible rooms in each category of rooms until all other rooms of that type were reserved. This latter position was also supported in comments received on behalf of the lodging industry; commenters also noted that this is the current practice of many hotels. In general, holding accessible rooms until requested by an individual who needs a room with accessible features or until it is the only available room of its type was viewed

widely as a sensible approach to allocating scarce accessible rooms without imposing unnecessary costs on hotels.

The Department agrees with this latter approach and has added §36.302(e)(1)(iii), which requires covered entities to hold accessible rooms for use by individuals with disabilities until all other guest rooms of that type have been rented and the accessible room requested is the only remaining room of that type. For example, if there are 25 rooms of a given type and two of these rooms are accessible, the reservations service is required to rent all 23 non-accessible rooms before it is permitted to rent these two accessible rooms to individuals without disabilities. If a one-of-a-kind room is accessible, that room is available to the first party to request it. The Department believes that this is the fairest approach available since it reserves accessible rooms for individuals who require them until all non-accessible rooms of that type have been reserved, and then provides equal access to any remaining rooms. It is also fair to hotels because it does not require them to forego renting a room that actually has been requested in favor of the possibility that an individual with a disability may want to reserve it at a later date.

Requirement to block accessible guest room reservations. NPRM §36.302(e)(3) required a public accommodation that owns, leases (or leases to), or operates a place of lodging to guarantee accessible guest rooms that are reserved through a reservations service to the same extent that it guarantees rooms that are not accessible. In the NPRM, the Department sought comment on the current practices of hotels and third party reservations services with respect to ''guaranteed'' hotel reservations and on the impact of requiring a public accommodation to guarantee accessible rooms to the extent it guarantees other rooms.

Comments received by the Department by and on behalf of both individuals with disabilities and public accommodations that provide reservations services made clear that, in many cases, when speaking of room guarantees, parties who are not familiar with hotel terminology actually mean to refer to policies for blocking and holding specific hotel rooms. Several commenters explained that, in most cases, when an individual makes ''reservations,'' hotels do not reserve specific rooms; rather the individual is reserving a room with certain features at a given price. When the hotel guest arrives, he or she is provided with a room that has those features.

In most cases, this does not pose a problem because there are many available rooms of a given type. However, in comparison, accessible rooms are much more limited in availability and there may be only one room in a given hotel that meets a guest's needs. As described in the discussion on the identification of accessible features in hotels and guest rooms, the presence or absence of particular accessible features may be the difference between a room that is usable by a particular person with a disability and one that is not.

For that reason, the Department has added §36.302(e)(1)(iv) to the final rule. Section 36.302(e)(1)(iv) requires covered entities to reserve, upon request, accessible guest rooms or specific types of guest rooms and ensure that the guest rooms requested are blocked and removed from all reservations systems (to eliminate double-booking, which is a common problem that arises when rooms are made available to be reserved through more than one reservations service). Of course, if a public accommodation typically requires a payment or deposit from its patrons in order to reserve a room, it may require the same payment or deposit from individuals with disabilities before it reserves an accessible room and removes it from all its reservations systems. These requirements should alleviate the widely-reported problem of arriving at a hotel only to discover that, although an accessible room was reserved, the room available is not accessible or does not have the specific accessible features needed. Many hotels already have a similar process in place for other guest rooms that are unique or one-of-a-kind, such as ''Presidential'' suites. The Department has declined to extend this requirement directly to third-party reservations services. Comments the Department received in response to the NPRM indicate that most of the actions required to implement these requirements primarily are within the control of the entities that own the place of lodging or that manage it on behalf of its owners.

Guarantees of reservations for accessible guest rooms. The Department recognizes that not all reservations are guaranteed, and the rule does not impose an affirmative duty to guarantee reservations. When a public accommodation does guarantee hotel or other room reservations, it must provide the same guarantee for accessible guest rooms as it makes for other rooms, except that it must apply that guarantee to the specific room reserved and blocked, even if in other situations, its guarantee policy only guarantees that a room of a specific type will be available at the guaranteed price. Without this reasonable modification to its guarantee policy, any guarantee for accessible rooms would be meaningless. If, for example, a hotel makes reservations for an accessible ''Executive Suite'' but, upon arrival, offers its guest an inaccessible Executive Suite that the guest is unable to enter, it would be meaningless to consider the hotel's guarantee fulfilled. As with the requirements for identifying, holding, and blocking accessible rooms, the Department has declined to extend this requirement directly to third-party reservations

services because the fulfillment of guarantees largely is beyond their power to control.

Application to rental units in timeshare, vacation communities, and condo-hotels. Because the Department has revised the definition of ''Places of Lodging'' in the final rule, the reservations requirements now apply to guest rooms and other rental units in timeshares, vacation communities, and condo-hotels where some or all of the units are owned and controlled by individual owners and rented out some portion of time to the public, as compared to traditional hotels and motels that are owned, controlled, and rented to the public by one entity. If a reservations service owns and controls one or more of the guest rooms or other units in the rental property (*e.g.*, a developer who retains and rents out unsold inventory), it is subject to the requirements set forth in §36.302(e).

Several commenters expressed concern about any rule that would require accessible units that are owned individually to be removed from the rental pool and rented last. Commenters pointed out that this would be a disadvantage to the owners of accessible units because they would be rented last, if at all. Further, certain vacation property managers consider holding specific units back to be a violation of their ethical responsibility to present all properties they manage at an equal advantage. To address these concerns, the Department has added §36.302(e)(2), which exempts reservations for individual guest rooms and other units that are not owned or substantially controlled by the entity that owns, leases, or operates the overall facility from the requirement that accessible guest rooms be held back from rental until all other guest rooms of that type have been rented. Section 36.302(e)(2) also exempts such rooms from requirements for blocking and guaranteeing reserved rooms. In resort developments with mixed ownership structures, such as a resort where some units are operated as hotel rooms and others are owned and controlled individually, a reservations service operated by the owner of the hotel portion may apply the exemption only to the rooms that are not owned or substantially controlled by the entity that owns, manages, or otherwise controls the overall facility.

Other reservations-related comments made on behalf of these entities reflected concerns similar to the general concerns expressed with respect to traditional hotel properties. For example, commenters noted that because of the unique nature of the timeshare industry, additional flexibility is needed when making reservations for accessible units. One commenter explained that reservations are sometimes made through unusual entities such as exchange companies, which are not public accommodations and which operate to trade ownership interests of millions of individual owners. The commenter expressed concern that developers or resort owners would be held responsible for the actions of these exchange entities. If, as described, the choice to list a unit with an exchange company is made by the individual owner of the property and the exchange company does not operate on behalf of the reservations service, the reservations service is not liable for the exchange company's actions.

As with hotels, the Department believes that within the 18-month transition period these reservations services should be able to modify their systems to ensure that potential guests with disabilities who need accessible rooms can make reservations during the same hours and in the same manner as those who do not need accessible rooms.

Section 36.302(f) Ticketing

The 1991 title III regulation did not contain specific regulatory language on ticketing. The ticketing policies and practices of public accommodations, however, are subject to title III's nondiscrimination provisions. Through the investigation of complaints, enforcement actions, and public comments related to ticketing, the Department became aware that some venue operators, ticket sellers, and distributors were violating title III's nondiscrimination mandate by not providing individuals with disabilities the same opportunities to purchase tickets for accessible seating as provided to spectators purchasing conventional seats. In the NPRM, the Department proposed §36.302(f) to provide explicit direction and guidance on discriminatory practices for entities involved in the sale or distribution of tickets.

The Department received comments from advocacy groups, assembly area trade associations, public accommodations, and individuals. Many commenters supported the addition of regulatory language pertaining to ticketing and urged the Department to retain it in the final rule. Several commenters, however, questioned why there were inconsistencies between the title II and title III provisions and suggested that the same language be used for both titles. The Department has decided to retain ticketing regulatory language and to ensure consistency between the ticketing provisions in title II and title III.

Because many in the ticketing industry view season tickets and other multi-event packages differently from individual tickets, the Department bifurcated some season ticket provisions from those concerning single-event tickets in the NPRM. This structure, however, resulted in some provisions being repeated for both types of tickets but not for others even though they were intended to apply to both types of tickets. The result was that it was not entirely clear that some of the provisions that were not repeated also were intended to apply to season tickets.

The Department is addressing the issues raised by these commenters using a different approach. For the purposes of this section, a *single event* refers to an individual performance for which tickets may be purchased. In contrast, a *series of events* includes, but is not limited to, subscription events, event packages, season tickets, or any other tickets that may be purchased for multiple events of the same type over the course of a specified period of time whose ownership right reverts to the public accommodation at the end of each season or time period. Series-of-events tickets that give their holders an enhanced ability to purchase such tickets from the public accommodation in seasons or periods of time that follow, such as a right of first refusal or higher ranking on waiting lists for more desirable seats, are subject to the provisions in this section. In addition, the final rule merges together some NPRM paragraphs that dealt with related topics and has reordered and renamed some of the paragraphs that were in the NPRM.

Ticket sales. In the NPRM, the Department proposed, in §36.302(f)(1), a general rule that a public accommodation shall modify its policies, practices, or procedures to ensure that individuals with disabilities can purchase tickets for accessible seating for an event or series of events in the same way as others (*i.e.*, during the same hours and through the same distribution methods as other seating is sold). ''Accessible seating'' is defined in §36.302(f)(1)(i) of the final rule to mean ''wheelchair spaces and companion seats that comply with sections 221 and 802 of the 2010 Standards along with any other seats required to be offered for sale to the individual with a disability pursuant to paragraph (4) of this section.'' The defined term does not include designated aisle seats. A ''wheelchair space'' refers to a space for a single wheelchair and its occupant.

The NPRM proposed requiring that accessible seats be sold through the ''same methods of distribution'' as non-accessible seats. 73 FR 34508, 34554 (June 17, 2008). Comments from venue managers and others in the business community, in general, noted that multiple parties are involved in ticketing, and because accessible seats may not be allotted to all parties involved at each stage, such parties should be protected from liability. For example, one commenter noted that a third-party ticket vendor, like Ticketmaster, can only sell the tickets it receives from its client. Because §36.302(f)(1) of the final rule requires venue operators to make available accessible seating through the same methods of distribution they use for their regular tickets, venue operators that provide tickets to third-party ticket vendors are required to provide accessible seating to the third-party ticket vendor. This provision will enhance third-party ticket vendors' ability to acquire and sell accessible seating for sale in the future. The Department notes that once third-party ticket vendors acquire accessible tickets, they are obligated to sell them in accordance with these rules.

The Department also has received frequent complaints that individuals with disabilities have not been able to purchase accessible seating over the Internet, and instead have had to engage in a laborious process of calling a customer service line, or sending an email to a customer service representative and waiting for a response. Not only is such a process burdensome, but it puts individuals with disabilities at a disadvantage in purchasing tickets for events that are popular and may sell out in minutes. Because §36.302(f)(5) of the final rule authorizes venues to release accessible seating in case of a sell-out, individuals with disabilities effectively could be cut off from buying tickets unless they also have the ability to purchase tickets in real time over the Internet. The Department's new regulatory language is designed to address this problem.

Several commenters representing assembly areas raised concerns about offering accessible seating for sale over the Internet. They contended that this approach would increase the incidence of fraud since anyone easily could purchase accessible seating over the Internet. They also asserted that it would be difficult technologically to provide accessible seating for sale in real time over the Internet, or that to do so would require simplifying the rules concerning the purchase of multiple additional accompanying seats. Moreover, these commenters argued that requiring an individual purchasing accessible seating to speak with a customer service representative would allow the venue to meet the patron's needs most appropriately and ensure that wheelchair spaces are reserved for individuals with disabilities who require wheelchair spaces. Finally, these commenters argued that individuals who can transfer effectively and conveniently from a wheelchair to a seat with a movable armrest seat could instead purchase designated aisle seats.

The Department considered these concerns carefully and has decided to continue with the general approach proposed in the NPRM. Although fraud is an important concern, the Department believes that it is best combated by other means that would not have the effect of limiting the ability of individuals with disabilities to purchase tickets, particularly since restricting the purchase of accessible seating over the Internet will, of itself, not curb fraud. In addition, the Department has identified permissible means for covered entities to reduce the incidence of fraudulent accessible seating ticket purchases in §36.302(f)(8) of the final rule.

Several commenters questioned whether ticket Web sites themselves must be accessible to individuals who are blind or have low vision, and if so, what that requires. The Department has consistently interpreted the ADA to cover Web sites that are operated by public accommodations and stated that such sites must provide their services in an accessible manner or provide an accessible alternative to the Web site that is available 24 hours a day, seven days a week. The final rule, therefore, does not impose any new obligation in this area. The accessibility of Web sites is discussed in more detail in the section entitled ''Other Issues.''

In §36.302(f)(2) of the NPRM, the Department also proposed requiring public accommodations to make accessible seating available during all stages of tickets sales including, but not limited to, presales, promotions, lotteries, waitlists, and general sales. For example, if tickets will be presold for an event that is open only to members of a fan club, or to holders of a particular credit card, then tickets for accessible seating must be made available for purchase through those means. This requirement does not mean that any individual with a disability would be able to purchase those seats. Rather, it means that an individual with a disability who meets the requirement for such a sale (*e.g.*, who is a member of the fan club or holds that credit card) will be able to participate in the special promotion and purchase accessible seating. The Department has maintained the substantive provisions of the NPRM's §§36.302(f)(1) and (f)(2) but has combined them in a single paragraph at §36.302(f)(1)(ii) of the final rule so that all of the provisions having to do with the manner in which tickets are sold are located in a single paragraph.

Identification of available accessible seating. In the NPRM, the Department proposed §36.302(f)(3), which, as modified and renumbered §36.302(f)(2)(iii) in the final rule, requires a facility to identify available accessible seating through seating maps, brochures, or other methods if that information is made available about other seats sold to the general public. This rule requires public accommodations to provide information about accessible seating to the same degree of specificity that it provides information about general seating. For example, if a seating map displays color-coded blocks pegged to prices for general seating, then accessible seating must be similarly color-coded. Likewise, if covered entities provide detailed maps that show exact seating and pricing for general seating, they must provide the same for accessible seating.

The NPRM did not specify a requirement to identify prices for accessible seating. The final rule requires that if such information is provided for general seating, it must be provided for accessible seating as well.

In the NPRM, the Department proposed in §36.302(f)(4) that a public accommodation, upon being asked, must inform persons with disabilities and their companions of the locations of all unsold or otherwise available seating. This provision is intended to prevent the practice of ''steering'' individuals with disabilities to certain accessible seating so that the facility can maximize potential ticket sales by releasing unsold accessible seating, especially in preferred or desirable locations, for sale to the general public. The Department received no significant comment on this proposal. The Department has retained this provision in the final rule but has added it, with minor modifications, to §36.302(f)(2) as paragraph (i).

Ticket prices. In the NPRM, the Department proposed §36.302(f)(7) requiring that ticket prices for accessible seating be set no higher than the prices for other seats in that seating section for that event. The NPRM's provision also required that accessible seating be made available at every price range, and if an existing facility has barriers to accessible seating within a particular price range, a proportionate amount of seating (determined by the ratio of the total number of seats at that price level to the total number of seats in the assembly area) must be offered in an accessible location at that same price. Under this rule, for example, if it is not readily achievable for a 20,000-seat facility built in 1980 to place accessible seating in the $20-price category, which is on the upper deck, it must place a proportionate number of seats in an accessible location for $20. If the upper deck has 2,000 seats, then the facility must place 10 percent of its accessible seating in an accessible location for $20 provided that it is part of a seating section where ticket prices are equal to or more than $20—a facility may not place the $20-accessible seating in a $10-seating section. The Department received no significant comment on this rule, and it has been retained, as amended, in the final rule in §36.302(f)(3).

Purchase of multiple tickets. In the NPRM, the Department proposed §36.302(f)(9) to address one of the most common ticketing complaints raised with the Department: that individuals with disabilities are not able to purchase more than two tickets. The Department proposed this provision to facilitate the ability of individuals with disabilities to attend events with friends, companions, or associates who may or may not have a disability by enabling individuals with disabilities to purchase the maximum number of tickets allowed per transaction to other spectators; by requiring venues to place accompanying individuals in general seating as close as possible to accessible seating (in the event that a group must be divided because of the large size of the group); and by allowing an individual with a disability to purchase up to three additional contiguous seats

per wheelchair space if they are available at the time of sale. Section 36.302(f)(9)(ii) of the NPRM required that a group containing one or more wheelchair users must be placed together, if possible, and that in the event that the group could not be placed together, the individuals with disabilities may not be isolated from the rest of the group.

The Department asked in the NPRM whether this rule was sufficient to effectuate the integration of individuals with disabilities. Many advocates and individuals praised it as a welcome and much-needed change, stating that the trade-off of being able to sit with their family or friends was worth reducing the number of seats available for individuals with disabilities. Some commenters went one step further and suggested that the number of additional accompanying seats should not be restricted to three.

Although most of the substance of the proposed provision on the purchase of multiple tickets has been maintained in the final rule, it has been renumbered as §36.302(f)(4), reorganized, and supplemented. To preserve the availability of accessible seating for other individuals with disabilities, the Department has not expanded the rule beyond three additional contiguous seats. Section 36.302(f)(4)(i) of the final rule requires public accommodations to make available for purchase three additional tickets for seats in the same row that are contiguous with the wheelchair space, provided that at the time of purchase there are three such seats available. The requirement that the additional seats be ''contiguous with the wheelchair space'' does not mean that each of the additional seats must be in actual contact or have a border in common with the wheelchair space; however, at least one of the additional seats should be immediately adjacent to the wheelchair space. The Department recognizes that it will often be necessary to use vacant wheelchair spaces to provide for contiguous seating.

The Department has added paragraphs (4)(ii) and (4)(iii) to clarify that in situations where there are insufficient unsold seats to provide three additional contiguous seats per wheelchair space or a ticket office restricts sales of tickets to a particular event to less than four tickets per customer, the obligation to make available three additional contiguous seats per wheelchair space would be affected. For example, if at the time of purchase, there are only two additional contiguous seats available for purchase because the third has been sold already, then the ticket purchaser would be entitled to two such seats. In this situation, the public entity would be required to make up the difference by offering one additional ticket for sale that is as close as possible to the accessible seats. Likewise, if ticket purchases for an event are limited to two per customer, a person who uses a wheelchair who seeks to purchase tickets would be entitled to purchase only one additional contiguous seat for the event.

The Department has also added paragraph (4)(iv) to clarify that the requirement for three additional contiguous seats is not intended to serve as a cap if the maximum number of tickets that may be purchased by members of the general public exceeds the four tickets an individual with a disability ordinarily would be allowed to purchase (*i.e.*, a wheelchair space and three additional contiguous seats). If the maximum number of tickets that may be purchased by members of the general public exceeds four, an individual with a disability is to be allowed to purchase the maximum number of tickets; however, additional tickets purchased by an individual with a disability beyond the wheelchair space and the three additional contiguous seats provided in §36.302(f)(4)(i) do not have to be contiguous with the wheelchair space.

The NPRM proposed at §36.302(f)(9)(ii) that for group sales, if a group includes one or more individuals who use a wheelchair, then the group shall be placed in a seating area with accessible seating so that, if possible, the group can sit together. If it is necessary to divide the group, it should be divided so that the individuals in the group who use wheelchairs are not isolated from the rest of the members of their group. The final rule retains the NPRM language in paragraph (4)(v).

Hold and release of unsold accessible seating. The Department recognizes that not all accessible seating will be sold in all assembly areas for every event to individuals with disabilities who need such seating and that public accommodations may have opportunities to sell such seating to the general public. The Department proposed in the NPRM a provision aimed at striking a balance between affording individuals with disabilities adequate time to purchase accessible seating and the entity's desire to maximize ticket sales. In the NPRM, the Department proposed §36.302(f)(6), which allowed for the release of accessible seating under the following circumstances: (i) When all seating in the facility has been sold, excluding luxury boxes, club boxes, or suites; (ii) when all seating in a designated area has been sold and the accessible seating being released is in the same area; or (iii) when all seating in a designated price range has been sold and the accessible seating being released is within the same price range.

The Department's NPRM asked ''whether additional regulatory guidance is required or appropriate in terms of a more detailed or set schedule for the release of tickets in conjunction with the three approaches described above. For example, does the proposed regulation address the variable needs of assembly

areas covered by the ADA? Is additional regulatory guidance required to eliminate discriminatory policies, practices and procedures related to the sale, hold, and release of accessible seating? What considerations should appropriately inform the determination of when unsold accessible seating can be released to the general public?'' 73 FR 34508, 34527 (June 17, 2008).

The Department received comments both supporting and opposing the inclusion of a hold-and-release provision. One side proposed loosening the restrictions on the release of unsold accessible seating. One commenter from a trade association suggested that tickets should be released regardless of whether there is a sell-out, and that these tickets should be released according to a set schedule. Conversely, numerous individuals, advocacy groups, and at least one public entity urged the Department to tighten the conditions under which unsold tickets for accessible seating may be released. These commenters suggested that venues should not be permitted to release tickets during the first two weeks of sale, or alternatively, that they should not be permitted to be released earlier than 48 hours before a sold-out event. Many of these commenters criticized the release of accessible seating under the second and third prongs of §36.302(f)(6) in the NPRM (when there is a sell-out in general seating in a designated seating area or in a price range), arguing that it would create situations where general seating would be available for purchase while accessible seating would not be.

Numerous commenters—both from the industry and from advocacy groups—asked for clarification of the term ''sell-out.'' Business groups commented that industry practice is to declare a sell-out when there are only ''scattered singles'' available—isolated seats that cannot be purchased as a set of adjacent pairs. Many of those same commenters also requested that ''sell-out'' be qualified with the phrase ''of all seating available for sale'' since it is industry practice to hold back from release tickets to be used for groups connected with that event (*e.g.*, the promoter, home team, or sports league). They argued that those tickets are not available for sale and any return of these tickets to the general inventory happens close to the event date. Noting the practice of holding back tickets, one advocacy group suggested that covered entities be required to hold back accessible seating in proportion to the number of tickets that are held back for later release.

The Department has concluded that it would be inappropriate to interfere with industry practice by defining what constitutes a ''sell-out'' and that a public accommodation should continue to use its own approach to defining a ''sell-out.'' If, however, a public accommodation declares a sell-out by reference to those seats that are available for sale, but it holds back tickets that it reasonably anticipates will be released later, it must hold back a proportional percentage of accessible seating to be released as well.

Adopting any of the alternatives proposed in the comments summarized above would have upset the balance between protecting the rights of individuals with disabilities and meeting venues' concerns about lost revenue from unsold accessible seating. As a result, the Department has retained §36.302(f)(6) renumbered as §36.302(f)(5) in the final rule. The Department has, however, modified the regulation text to specify that accessible seating may be released only when ''all non-accessible tickets in a designated seating area have been sold and the tickets for accessible seating are being released in the same designated area.'' As stated in the NPRM, the Department intended for this provision to allow, for example, the release of accessible seating at the orchestra level when all other seating at the orchestra level is sold. The Department has added this language to the final rule at §36.302(f)(5)(B) to clarify that venues cannot designate or redesignate seating areas for the purpose of maximizing the release of unsold accessible seating. So, for example, a venue may not determine on an ad hoc basis that a group of seats at the orchestra level is a designated seating area in order to release unsold accessible seating in that area.

The Department also has maintained the hold-and-release provisions that appeared in the NPRM, but has added a provision to address the release of accessible seating for series-of-events tickets on a series-of-events basis. Many commenters asked the Department whether unsold accessible seating may be converted to general seating and released to the general public on a season-ticket basis or longer when tickets typically are sold as a season-ticket package or other long-term basis. Several disability rights organizations and individual commenters argued that such a practice should not be permitted, and, if it were, that conditions should be imposed to ensure that individuals with disabilities have future access to those seats.

The Department interprets the fundamental principle of the ADA as a requirement to give individuals with disabilities equal, not better, access to those opportunities available to the general public. Thus, for example, a public accommodation that sells out its facility on a season-ticket only basis is not required to leave unsold its accessible seating if no persons with disabilities purchase those season-ticket seats. Of course, public accommodations may choose to go beyond what is required by reserving accessible seating for individuals with disabilities (or releasing such seats for sale to the general public) on an individual-game basis.

If a covered entity chooses to release unsold accessible seating for sale on a season-ticket or other long-term basis, it must meet at least two conditions. Under §36.302(f)(5)(iii) of the final rule, public accommodations must leave flexibility for game-day change-outs to accommodate ticket transfers on the secondary market. And public accommodations must modify their ticketing policies so that, in future years, individuals with disabilities will have the ability to purchase accessible seating on the same basis as other patrons (*e.g.*, as season tickets). Put differently, releasing accessible seating to the general public on a season-ticket or other long-term basis cannot result in that seating being lost to individuals with disabilities in perpetuity. If, in future years, season tickets become available and persons with disabilities have reached the top of the waiting list or have met any other eligibility criteria for season ticket purchases, public accommodations must ensure that accessible seating will be made available to the eligible individuals. In order to accomplish this, the Department has added §36.302(f)(5)(iii)(A) to require public accommodations that release accessible season tickets to individuals who do not have disabilities that require the features of accessible seating to establish a process to prevent the automatic reassignment of such ticket holders to accessible seating. For example, a public accommodation could have in place a system whereby accessible seating that was released because it was not purchased by individuals with disabilities is not in the pool of tickets available for purchase for the following season unless and until the conditions for ticket release have been satisfied in the following season. Alternatively, a public accommodation might release tickets for accessible seating only when a purchaser who does not need its features agrees that he or she has no guarantee of or right to the same seats in the following season, or that if season tickets are guaranteed for the following season, the purchaser agrees that the offer to purchase tickets is limited to non-accessible seats with, to the extent practicable, comparable price, view, and amenities to the accessible seats such individuals held in the prior year. The Department is aware that this rule may require some administrative changes but believes that this process will not create undue financial and administrative burdens. The Department believes that this approach is balanced and beneficial. It will allow public accommodations to sell all of their seats and will leave open the possibility, in future seasons or series of events, that persons who need accessible seating may have access to it.

The Department also has added §36.302(f)(5)(iii)(B) to address how season tickets or series-of-events tickets that have attached ownership rights should be handled if the ownership right returns to the public accommodation (*e.g.*, when holders forfeit their ownership right by failing to purchase season tickets or sell their ownership right back to a public accommodation). If the ownership right is for accessible seating, the public accommodation is required to adopt a process that allows an eligible individual with a disability who requires the features of such seating to purchase the rights and tickets for such seating.

Nothing in the regulatory text prevents a public accommodation from establishing a process whereby such ticket holders agree to be voluntarily reassigned from accessible seating to another seating area so that individuals with mobility disabilities or disabilities that require the features of accessible seating and who become newly eligible to purchase season tickets have an opportunity to do so. For example, a public accommodation might seek volunteers to relocate to another location that is at least as good in terms of its location, price, and amenities or a public accommodation might use a seat with forfeited ownership rights as an inducement to get a ticket holder to give up accessible seating he or she does not need.

Ticket transfer. The Department received many comments asking whether accessible seating has the same transfer rights as general seats. The proposed regulation at §36.302(f)(5) required that individuals with disabilities must be allowed to purchase season tickets for accessible seating on the same terms and conditions as individuals purchasing season tickets for general seating, including the right—if it exists for other ticket-holders—to transfer individual tickets to friends or associates. Some commenters pointed out that the NPRM proposed explicitly allowing individuals with disabilities holding season tickets to transfer tickets but did not address the transfer of tickets purchased for individual events. Several commenters representing assembly areas argued that persons with disabilities holding tickets for an individual event should not be allowed to sell or transfer them to third parties because such ticket transfers would increase the risk of fraud or would make unclear the obligation of the entity to accommodate secondary ticket transfers. They argued that individuals holding accessible seating should either be required to transfer their tickets to another individual with a disability or return them to the facility for a refund.

Although the Department is sympathetic to concerns about administrative burden, curtailing transfer rights for accessible seating when other ticket holders are permitted to transfer tickets would be inconsistent with the ADA's guiding principle that individuals with disabilities must have rights equal to others. Thus, the Department has added language in the final rule in

§ 36.302(f)(6) that requires that individuals with disabilities holding accessible seating for any event have the same transfer rights accorded other ticket holders for that event. Section 36.302(f)(6) also preserves the rights of individuals with disabilities who hold tickets to accessible seats for a series of events to transfer individual tickets to others, regardless of whether the transferee needs accessible seating. This approach recognizes the common practice of individuals splitting season tickets or other multi-event ticket packages with friends, colleagues, or other spectators to make the purchase of season tickets affordable; individuals with disabilities should not be placed in the burdensome position of having to find another individual with a disability with whom to share the package.

This provision, however, does not require public accommodations to seat an individual who holds a ticket to an accessible seat in such seating if the individual does not need the accessible features of the seat. A public accommodation may reserve the right to switch these individuals to different seats if they are available, but a public accommodation is not required to remove a person without a disability who is using accessible seating from that seating, even if a person who uses a wheelchair shows up with a ticket from the secondary market for a non-accessible seat and wants accessible seating.

Secondary ticket market. Section 36.302(f)(7) is a new provision in the final rule that requires a public accommodation to modify its policies, practices, or procedures to ensure that an individual with a disability, who acquires a ticket in the secondary ticket market, may use that ticket under the same terms and conditions as other ticket holders who acquire a ticket in the secondary market for an event or series of events. This principle was discussed in the NPRM in connection with § 36.302(f)(5), pertaining to season-ticket sales. There, the Department asked for public comment regarding a public accommodation's proposed obligation to accommodate the transfer of accessible seating tickets on the secondary ticket market to those who do not need accessible seating and vice versa.

The secondary ticket market, for the purposes of this rule, broadly means any transfer of tickets after the public accommodation's initial sale of tickets to individuals or entities. It thus encompasses a wide variety of transactions, from ticket transfers between friends to transfers using commercial exchange systems. Many commenters noted that the distinction between the primary and secondary ticket market has become blurred as a result of agreements between teams, leagues, and secondary market sellers. These commenters noted that the secondary market may operate independently of the public accommodation, and parts of the secondary market, such as ticket transfers between friends, undoubtedly are outside the direct jurisdiction of the public accommodation. To the extent that venues seat persons who have purchased tickets on the secondary market, they must similarly seat persons with disabilities who have purchased tickets on the secondary market. In addition, some public accommodations may acquire ADA obligations directly by formally entering the secondary ticket market.

The Department's enforcement experience with assembly areas also has revealed that venues regularly provide for and make last-minute seat transfers. As long as there are vacant wheelchair spaces, requiring venues to provide wheelchair spaces for patrons who acquired inaccessible seats and need wheelchair spaces is an example of a reasonable modification of a policy under title III of the ADA. Similarly, a person who has a ticket for a wheelchair space but who does not require its accessible features could be offered non-accessible seating if such seating is available.

The Department's longstanding position that title III of the ADA requires venues to make reasonable modifications in their policies to allow individuals with disabilities who acquired non-accessible tickets on the secondary ticket market to be seated in accessible seating, where such seating is vacant, is supported by the only Federal court to address this issue. *See Independent Living Resources* v. *Oregon Arena Corp.*, 1 F. Supp. 2d 1159, 1171 (D. Or. 1998). The Department has incorporated this position into the final rule at § 36.302(f)(7)(ii).

The NPRM contained two questions aimed at gauging concern with the Department's consideration of secondary ticket market sales. The first question asked whether a secondary purchaser who does not have a disability and who buys an accessible seat should be required to move if the space is needed for someone with a disability.

Many disability rights advocates answered that the individual should move provided that there is a seat of comparable or better quality available for him and his companion. Some venues, however, expressed concerns about this provision, and asked how they are to identify who should be moved and what obligations apply if there are no seats available that are equivalent or better in quality.

The Department's second question asked whether there are particular concerns about the obligation to provide accessible seating, including a wheelchair space, to an individual with a disability who purchases an inaccessible seat through the secondary market.

Industry commenters contended that this requirement would create a ''logistical nightmare,'' with venues scrambling to reseat patrons in the short time between the

opening of the venues' doors and the commencement of the event. Furthermore, they argued that they might not be able to reseat all individuals and that even if they were able to do so, patrons might be moved to inferior seats (whether in accessible or non-accessible seating). These commenters also were concerned that they would be sued by patrons moved under such circumstances.

These commenters seem to have misconstrued the rule. Covered entities are not required to seat every person who acquires a ticket for inaccessible seating but needs accessible seating, and are not required to move any individual who acquires a ticket for accessible seating but does not need it. Covered entities that allow patrons to buy and sell tickets on the secondary market must make reasonable modifications to their policies to allow persons with disabilities to participate in secondary ticket transfers. The Department believes that there is no one-size-fits-all rule that will suit all assembly areas. In those circumstances where a venue has accessible seating vacant at the time an individual with a disability who needs accessible seating presents his ticket for inaccessible seating at the box office, the venue must allow the individual to exchange his ticket for an accessible seat in a comparable location if such an accessible seat is vacant. Where, however, a venue has sold all of its accessible seating, the venue has no obligation to provide accessible seating to the person with a disability who purchased an inaccessible seat on the secondary market. Venues may encourage individuals with disabilities who hold tickets for inaccessible seating to contact the box office before the event to notify them of their need for accessible seating, even though they may not require ticketholders to provide such notice.

The Department notes that public accommodations are permitted, though not required, to adopt policies regarding moving patrons who do not need the features of an accessible seat. If a public accommodation chooses to do so, it might mitigate administrative concerns by marking tickets for accessible seating as such, and printing on the ticket that individuals who purchase such seats but who do not need accessible seating are subject to being moved to other seats in the facility if the accessible seating is required for an individual with a disability. Such a venue might also develop and publish a ticketing policy to provide transparency to the general public and to put holders of tickets for accessible seating who do not require it on notice that they may be moved.

Prevention of fraud in purchase of accessible seating. Assembly area managers and advocacy groups have informed the Department that the fraudulent purchase of accessible seating is a pressing concern. Curbing fraud is a goal that public accommodations and individuals with disabilities share. Steps taken to prevent fraud, however, must be balanced carefully against the privacy rights of individuals with disabilities. Such measures also must not impose burdensome requirements upon, nor restrict the rights of, individuals with disabilities.

In the NPRM, the Department struck a balance between these competing concerns by proposing §36.302(f)(8), which prohibited public accommodations from asking for proof of disability before the purchase of accessible seating but provided guidance in two paragraphs on appropriate measures for curbing fraud. Paragraph (i) proposed allowing a public accommodation to ask individuals purchasing single-event tickets for accessible seating whether they are wheelchair users. Paragraph (ii) proposed allowing a public accommodation to require individuals purchasing accessible seating for season tickets or other multi-event ticket packages to attest in writing that the accessible seating is for a wheelchair user. Additionally, the NPRM proposed to permit venues, when they have good cause to believe that an individual has fraudulently purchased accessible seating, to investigate that individual.

Several commenters objected to this rule on the ground that it would require a wheelchair user to be the purchaser of tickets. The Department has reworded this paragraph to reflect that the individual with a disability does not have to be the ticket purchaser. The final rule allows third parties to purchase accessible tickets at the request of an individual with a disability.

Commenters also argued that other individuals with disabilities who do not use wheelchairs should be permitted to purchase accessible seating. Some individuals with disabilities who do not use wheelchairs urged the Department to change the rule, asserting that they, too, need accessible seating. The Department agrees that such seating, although designed for use by a wheelchair user, may be used by non-wheelchair users, if those persons are persons with a disability who need to use accessible seating because of a mobility disability or because their disability requires the use of the features that accessible seating provides (*e.g.*, individuals who cannot bend their legs because of braces, or individuals who, because of their disability, cannot sit in a straight-back chair).

Some commenters raised concerns that allowing venues to ask questions to determine whether individuals purchasing accessible seating are doing so legitimately would burden individuals with disabilities in the purchase of accessible seating. The Department has retained the substance of this provision in §36.302(f)(8) of the final rule, but emphasizes that such questions should be asked at the initial time of purchase. For example, if the method of purchase is via the Internet, then the question(s) should be answered by

clicking a yes or no box during the transaction. The public accommodation may warn purchasers that accessible seating is for individuals with disabilities and that individuals purchasing such tickets fraudulently are subject to relocation.

One commenter argued that face-to-face contact between the venue and the ticket holder should be required in order to prevent fraud and suggested that individuals who purchase accessible seating should be required to pick up their tickets at the box office and then enter the venue immediately. The Department has declined to adopt that suggestion. It would be discriminatory to require individuals with disabilities to pick up tickets at the box office when other spectators are not required to do so. If the assembly area wishes to make face-to-face contact with accessible seating ticket holders to curb fraud, it may do so through its ushers and other customer service personnel located within the seating area.

Some commenters asked whether it is permissible for assembly areas to have voluntary clubs where individuals with disabilities self-identify to the public accommodation in order to become a member of a club that entitles them to purchase accessible seating reserved for club members or otherwise receive priority in purchasing accessible seating. The Department agrees that such clubs are permissible, provided that a reasonable amount of accessible seating remains available at all prices and dispersed at all locations for individuals with disabilities who are non-members.

Section 36.303 Auxiliary Aids and Services

Section 36.303(a) of the 1991 title III regulation requires a public accommodation to take such steps as may be necessary to ensure that no individual with a disability is excluded, denied services, segregated, or otherwise treated differently than other individuals because of the absence of auxiliary aids and services, unless the public accommodation can demonstrate that taking such steps would fundamentally alter the nature of the goods, services, facilities, advantages, or accommodations being offered or would result in an undue burden. Implicit in this duty to provide auxiliary aids and services is the underlying obligation of a public accommodation to communicate effectively with customers, clients, patients, companions, or participants who have disabilities affecting hearing, vision, or speech. The Department notes that §36.303(a) does not require public accommodations to provide assistance to individuals with disabilities that is unrelated to effective communication, although requests for such assistance may be otherwise subject to the reasonable modifications or barrier removal requirements.

The Department has investigated hundreds of complaints alleging that public accommodations have failed to provide effective communication, and many of these investigations have resulted in settlement agreements and consent decrees. During the course of these investigations, the Department has determined that public accommodations sometimes misunderstand the scope of their obligations under the statute and the regulation. Section 36.303 in the final rule codifies the Department's longstanding policies in this area, and includes provisions based on technological advances and breakthroughs in the area of auxiliary aids and services that have occurred since the 1991 title III regulation was published.

Video remote interpreting (VRI). Section 36.303(b)(1) sets out examples of auxiliary aids and services. In the NPRM, the Department proposed adding video remote services (hereafter referred to as ''video remote interpreting'' or ''VRI'') and the exchange of written notes among the examples. The Department also proposed amending the provision to reflect technological advances, such as the wide availability of real-time capability in transcription services and captioning.

VRI is defined in the final rule at §36.104 as ''an interpreting service that uses video conference technology over dedicated lines or wireless technology offering high-speed, wide-bandwidth video connection or wireless connection that delivers high-quality video images as provided in §36.303(f).'' The Department notes that VRI generally consists of a videophone, monitors, cameras, a high-speed video connection, and an interpreter provided by the public accommodation pursuant to a contract for services. The term's inclusion within the definition of ''qualified interpreter'' makes clear that a public accommodation's use of VRI satisfies its title III obligations only where VRI affords effective communication. Comments from advocates and persons with disabilities expressed concern that VRI may not always provide effective communication, especially in hospitals and emergency rooms. Examples were provided of patients who are unable to see the video monitor because they are semi-conscious or unable to focus on the video screen; other examples were given of cases where the video monitor is out of the sightline of the patient or the image is out of focus; still other examples were given of patients who cannot see the screen because the signal is interrupted, causing unnatural pauses in communication, or the image is grainy or otherwise unclear. Many commenters requested more explicit guidelines on the use of VRI, and some recommended requirements for equipment maintenance, dedicated high-speed, wide-bandwidth video connections, and training of staff using VRI, especially in hospital and health care situations. Several major organizations requested a requirement to include the interpreter's

face, head, arms, hands, and eyes in all transmissions.

The Department has determined that VRI can be an effective method of providing interpreting service in certain situations, particularly when a live interpreter cannot be immediately on the scene. To ensure that VRI is effective, the Department has established performance standards for VRI in §36.303(f). The Department recognizes that reliance on VRI may not be effective in certain situations, such as those involving the exchange of complex information or involving multiple parties, and for some individuals, such as for persons who are deaf-blind, and using VRI in those circumstances would not satisfy a public accommodation's obligation to provide effective communication.

Comments from several disability advocacy organizations and individuals discouraged the Department from adding the exchange of written notes to the list of available auxiliary aids in §36.303(b). The Department consistently has recognized that the exchange of written notes may provide effective communication in certain contexts. The NPRM proposed adding an explicit reference to written notes because some title III entities do not understand that exchange of written notes using paper and pencil may be an available option in some circumstances. Advocates and persons with disabilities requested explicit limits on the use of written notes as a form of auxiliary aid because, they argued, most exchanges are not simple, and handwritten notes do not afford effective communication. One major advocacy organization, for example, noted that the speed at which individuals communicate orally or use sign language averages about 200 words per minute or more, and thus, the exchange of notes may provide only truncated or incomplete communication. For persons whose primary language is American Sign Language (ASL), some commenters pointed out, using written English in exchange of notes often is ineffective because ASL syntax and vocabulary is dissimilar from English. By contrast, some commenters from professional medical associations sought more specific guidance on when notes are allowed, especially in the context of medical offices and health care situations.

Exchange of notes likely will be effective in situations that do not involve substantial conversation, for example, when blood is drawn for routine lab tests or regular allergy shots are administered. However, interpreters should be used when the matter involves more complexity, such as in communication of medical history or diagnoses, in conversations about medical procedures and treatment decisions, or in communication of instructions for care at home or elsewhere. The Department discussed in the NPRM the kinds of situations in which use of interpreters or captioning is necessary. Additional guidance on this issue can be found in a number of agreements entered into with health care providers and hospitals that are available on the Department's Web site at *http://www.ada.gov*.

In addition, commenters requested that the Department include ''real-time'' before any mention of ''computer-aided'' or ''captioning'' technology to highlight the value of simultaneous translation of any communication. The Department has added to the final rule appropriate references to ''real-time'' to recognize this aspect of effective communication. Lastly, in this provision and elsewhere in the title III regulation, the Department has replaced the term ''telecommunications devices for deaf persons (TDD)'' with ''text telephones (TTYs).'' As noted in the NPRM, TTY has become the commonly accepted term and is consistent with the terminology used by the Access Board in the 2004 ADAAG. Comments from advocates and persons with disabilities expressed approval of the substitution of TTY for TDD in the proposed regulation, but expressed the view that the Department should expand the definition to ''voice, text, and video-based telecommunications products and systems, including TTY's, videophones, and captioned telephones, or equally effective telecommunications systems.'' The Department has expanded its definition of ''auxiliary aids and services'' in §36.303 to include those examples in the final rule. Other additions proposed in the NPRM, and retained in the final rule, include Brailled materials and displays, screen reader software, magnification software, optical readers, secondary auditory programs (SAP), and accessible electronic and information technology.

As the Department noted in the preamble to the NPRM, the list of auxiliary aids in §36.303(b) is merely illustrative. The Department does not intend that every public accommodation covered by title III must have access to every device or all new technology at all times, as long as the communication provided is effective.

Companions who are individuals with disabilities. The Department has added several new provisions to §36.303(c), but these provisions do not impose new obligations on places of public accommodation. Rather, these provisions simply codify the Department's longstanding positions. Section 36.303(c)(1) now states that ''[a] public accommodation shall furnish appropriate auxiliary aids and services where necessary to ensure effective communication with individuals with disabilities. This includes an obligation to provide effective communication to companions who are individuals with disabilities.'' Section 36.303(c)(1)(i) defines ''companion'' as ''a family member, friend, or associate of an individual seeking access to, or participating in,

the goods, services, facilities, privileges, advantages, or accommodations of a public accommodation, who, along with such individual, is an appropriate person with whom the public accommodation should communicate.''

This provision makes clear that if the companion is someone with whom the public accommodation normally would or should communicate, then the public accommodation must provide appropriate auxiliary aids and services to that companion to ensure effective communication with the companion. This commonsense rule provides the necessary guidance to public accommodations to implement properly the nondiscrimination requirements of the ADA. Commenters also questioned why, in the NPRM, the Department defined companion as ''a family member, friend, or associate of a program participant * * *,'' noting that the scope of a public accommodation's obligation is not limited to ''program participants'' but rather includes all individuals seeking access to, or participating in, the goods, services, facilities, privileges, advantages, or accommodations of the public accommodation. 73 FR 34508, 34554 (June 17, 2008). The Department agrees and has amended the regulatory language accordingly. Many commenters supported inclusion of companions in the rule and requested that the Department clarify that a companion with a disability may be entitled to effective communication from the public accommodation, even though the individual seeking access to, or participating in, the goods, services, facilities, privileges, advantages, or accommodations of the public accommodation is not an individual with a disability. Some commenters asked the Department to make clear that if the individual seeking access to or participating in the public accommodation's program or services is an individual with a disability and the companion is not, the public accommodation may not limit its communication to the companion, instead of communicating directly with the individual with a disability, when it would otherwise be appropriate to communicate with the individual with the disability.

Most entities and individuals from the medical field objected to the Department's proposal, suggesting that medical and health care providers, and they alone, should determine to whom medical information should be communicated and when auxiliary aids and services should be provided to companions. Others asked that the Department limit the public accommodation's obligation to communicate effectively with a companion to situations where such communication is necessary to serve the interests of the person who is receiving the public accommodation's services. It also was suggested that companions should receive auxiliary aids and services only when necessary to ensure effective communication with the person receiving the public accommodation's services, with an emphasis on the particular needs of the patient requiring assistance, not the patient's family or guardian.

Some in the medical community objected to the inclusion of any regulatory language regarding companions, asserting that such language is overbroad, seeks services for individuals whose presence is neither required by the public accommodation nor necessary for the delivery of the services or good, places additional burdens on the medical community, and represents an uncompensated mandate. One medical association commenter stated that such a mandate was particularly burdensome in situations where a patient is fully and legally capable of participating in the decision-making process and needs little or no assistance in obtaining care and following through on physician's instructions.

The final rule codifies the Department's longstanding interpretation of the ADA, and clarifies that public accommodations have effective communication obligations with respect to companions who are individuals with disabilities even where the individual seeking to participate in or benefit from what a public accommodation offers does not have a disability. There are many instances in which such an individual may not be an individual with a disability but his or her companion is an individual with a disability. The effective communication requirement applies equally to that companion.

Effective communication with companions is particularly critical in health care settings where miscommunication may lead to misdiagnosis and improper or delayed medical treatment. The Department has encountered confusion and reluctance by medical care providers regarding the scope of their obligation with respect to such companions. Effective communication with a companion is necessary in a variety of circumstances. For example, a companion may be legally authorized to make health care decisions on behalf of the patient or may need to help the patient with information or instructions given by hospital personnel. In addition, a companion may be the patient's next of kin or health care surrogate with whom hospital personnel need to communicate concerning the patient's medical condition. Moreover, a companion could be designated by the patient to communicate with hospital personnel about the patient's symptoms, needs, condition, or medical history. Furthermore, the companion could be a family member with whom hospital personnel normally would communicate. It has been the Department's longstanding position that public accommodations are required to provide effective communication to companions when they accompany patients to medical care providers for treatment.

The individual with a disability does not need to be present physically to trigger the public accommodation's obligation to provide effective communication to a companion. The controlling principle regarding whether appropriate auxiliary aids and services should be provided is whether the companion is an appropriate person with whom the public accommodation should communicate. Examples of such situations include back-to-school night or parent-teacher conferences at a private school. If the faculty writes on the board or otherwise displays information in a visual context during back-to-school night, this information must be communicated effectively to parents or guardians who are blind or have low vision. At a parent-teacher conference, deaf parents or guardians are to be provided with appropriate auxiliary aids and service to communicate effectively with the teacher and administrators. Likewise, when a deaf spouse attempts to communicate with private social service agencies about the services necessary for the hearing spouse, appropriate auxiliary aids and services must be provided to the deaf spouse by the public accommodation to ensure effective communication.

One medical association sought approval to impose a charge against an individual with a disability, either the patient or the companion, where that person had stated he or she needed an interpreter for a scheduled appointment, the medical provider had arranged for an interpreter to appear, and then the individual requiring the interpreter did not show up for the scheduled appointment. Section 36.301(c) of the 1991 title III regulation prohibits the imposition of surcharges to cover the costs of necessary auxiliary aids and services. As such, medical providers cannot pass along to their patients with disabilities the cost of obtaining an interpreter, even in situations where the individual cancels his or her appointment at the last minute or is a ''no-show'' for the scheduled appointment. The medical provider, however, may charge for the missed appointment if all other patients are subject to such a charge in the same circumstances.

Determining appropriate auxiliary aids. The type of auxiliary aid the public accommodation provides is dependent on which auxiliary aid is appropriate under the particular circumstances. Section 36.303(c)(1)(ii) codifies the Department's longstanding interpretation that the type of auxiliary aid or service necessary to ensure effective communication will vary in accordance with the method of communication used by the individual; the nature, length, and complexity of the communication involved; and the context in which the communication is taking place. As the Department explained in the NPRM, this provision lists factors the public accommodation should consider in determining which type of auxiliary aids and services are necessary. For example, an individual with a disability who is deaf or hard of hearing may need a qualified interpreter to discuss with hospital personnel a diagnosis, procedures, tests, treatment options, surgery, or prescribed medication (*e.g.*, dosage, side effects, drug interactions, etc.). In comparison, an individual who is deaf or hard of hearing who purchases an item in the hospital gift shop may need only an exchange of written notes to achieve effective communication.

The language in the first sentence of §36.303(c)(1)(ii) is derived from the Department's Technical Assistance Manual. *See* Department of Justice, Americans with Disabilities Act, *ADA Title III Technical Assistance Manual Covering Public Accommodations and Commercial Facilities*, III–4.3200, available at *http://www.ada.gov/taman3.html*. There were few comments regarding inclusion of this policy in the regulation itself, and those received were positive.

Many advocacy groups, particularly those representing blind individuals and those with low vision, urged the Department to add language in the final rule requiring the provision of accessible material in a manner that is timely, accurate, and private. This, they argued, would be especially important with regard to billing information, other time-sensitive material, or confidential information. The Department has added a provision in §36.303(c)(1)(ii) stating that in ''order to be effective, auxiliary aids and services must be provided in accessible formats, in a timely manner, and in such a way so as to protect the privacy and independence of the individual with a disability.''

The second sentence of §36.303(c)(1)(ii) states that ''[a] public accommodation should consult with individuals with disabilities whenever possible to determine what type of auxiliary aid is needed to ensure effective communication, but the ultimate decision as to what measures to take rests with the public accommodation, provided that the method chosen results in effective communication.'' Many commenters urged the Department to amend this provision to require public accommodations to give primary consideration to the expressed choice of an individual with a disability. However, as the Department explained when it initially promulgated the 1991 title III regulation, the Department believes that Congress did not intend under title III to impose upon a public accommodation the requirement that it give primary consideration to the request of the individual with a disability. *See* 28 CFR part 36, app. B at 726 (2009). The legislative history does, however, demonstrate congressional intent to strongly encourage consulting with persons with disabilities. *Id.* As the Department explained in the 1991 preamble, ''the House Education and Labor Committee stated that it 'expects' that 'public accommodation(s) will consult with the

individual with a disability before providing a particular auxiliary aid or service.' (Education and Labor report at 107).'' *Id.*

The commenters who urged that primary consideration be given to the individual with a disability noted, for example, that a public accommodation would not provide effective communication by using written notes where the individual requiring an auxiliary aid is in severe pain, or by providing a qualified ASL interpreter when an individual needs an oral interpreter instead. Both examples illustrate the importance of consulting with the individual with a disability in order to ensure that the communication provided is effective. When a public accommodation ignores the communication needs of the individual requiring an auxiliary aid or service, it does so at its peril, for if the communication provided is not effective, the public accommodation will have violated title III of the ADA.

Consequently, the regulation strongly encourages the public accommodation to engage in a dialogue with the individual with a disability to determine what auxiliary aids and services are appropriate under the circumstances. This dialogue should include a communication assessment of the individual with a disability initially, regularly, and as needed, because the auxiliary aids and services necessary to provide effective communication to the individual may fluctuate. For example, a deaf individual may go to a private community health center with what is at first believed to be a minor medical emergency, such as a sore knee, and the individual with a disability and the community health center both may believe that exchanging written notes will be effective; however, during that individual's visit, it may be determined that the individual is, in fact, suffering from an anterior cruciate ligament tear and must have surgery to repair the torn ligament. As the situation develops and the diagnosis and recommended course of action evolve into surgery, an interpreter likely will be necessary. The community health center has a continuing obligation to assess the auxiliary aids and services it is providing, and should consult with individuals with disabilities on a continuing basis to assess what measures are required to ensure effective communication.

Similarly, the Department strongly encourages public accommodations to keep individuals with disabilities apprised of the status of the expected arrival of an interpreter or the delivery of other requested or anticipated auxiliary aids and services. Also, when the public accommodation decides not to provide the auxiliary aids and services requested by an individual with a disability, the public accommodation should provide that individual with the reason for its decision.

Family members and friends as interpreters. Section 36.303(c)(2), which was proposed in the NPRM, has been included in the final rule to make clear that a public accommodation shall not require an individual with a disability to bring another individual to interpret for him or her. The Department has added this regulatory requirement to emphasize that when a public accommodation is interacting with a person with a disability, it is the public accommodation's responsibility to provide an interpreter to ensure effective communication. It is not appropriate to require the person with a disability to bring another individual to provide such services.

Many commenters supported inclusion of this language in the new rule. A representative from a cruise line association opined, however, that if a guest chose to cruise without an interpreter or companion, the ship would not be compelled to provide an interpreter for the medical facility. On the contrary, when an individual with a disability goes on a cruise, the cruise ship has an obligation to provide effective communication, including, if necessary, a qualified interpreter as defined in the rule.

Some representatives of pediatricians objected to this provision, stating that parents of children with disabilities often know best how to interpret their children's needs and health status and relay that information to the child's physician, and to remove that parent, or add a stranger into the examining room, may frighten children. These commenters requested clarification in the regulation that public accommodations should permit parents, guardians, or caregivers of children with disabilities to accompany them in medical settings to ensure effective communication. The regulation does not prohibit parents, guardians, or caregivers from being present or providing effective communication for children. Rather, it prohibits medical professionals (and other public accommodations) from requiring or forcing individuals with disabilities to bring other individuals with them to facilitate communication so that the public accommodation will not have to provide appropriate auxiliary aids and services. The public accommodation cannot avoid its obligation to provide an interpreter except under the circumstances described in §36.303(c)(3)–(4).

A State medical association also objected to this provision, opining that medical providers should have the authority to ask patients to bring someone with them to provide interpreting services if the medical provider determines that such a practice would result in effective communication and that patient privacy and confidentiality would be maintained. While the public accommodation has the obligation to determine what type of auxiliary aids and services are necessary to ensure effective communication, it

cannot unilaterally determine whether the patient's privacy and confidentiality would be maintained.

Section 36.303(c)(3) of the final rule codifies the Department's position that there are certain limited instances when a public accommodation may rely on an accompanying adult to interpret or facilitate communication: (1) In an emergency involving an imminent threat to the safety or welfare of an individual or the public; or (2) if the individual with a disability specifically requests it, the accompanying adult agrees to provide the assistance, and reliance on that adult for this assistance is appropriate under the circumstances. In such instances, the public accommodation should first offer to provide appropriate auxiliary aids and services free of charge.

Commenters requested that the Department make clear that the public accommodation cannot request, rely on, or coerce an accompanying adult to provide effective communication for an individual with a disability, and that only a voluntary offer of assistance is acceptable. The Department states unequivocally that consent of, and for, the accompanying adult to facilitate communication must be provided freely and voluntarily both by the individual with a disability and the accompanying adult—absent an emergency involving an imminent threat to the safety or welfare of an individual or the public. The public accommodation cannot coerce or attempt to persuade another adult to provide effective communication for the individual with a disability.

Several commenters asked that the Department make clear that children are not to be used to provide effective communication for family members and friends and that it is the responsibility of the public accommodation to provide effective communication, stating that interpreters often are needed in settings where it would not be appropriate for children to be interpreting, such as those involving medical issues, domestic violence, or other situations involving the exchange of confidential or adult-related material. Children often are hesitant to decline requests to provide communication services, which puts them in a very difficult position vis-a-vis family members and friends. The Department agrees. It is the Department's position that a public accommodation shall not rely on a minor child to facilitate communication with a family member, friend, or other individual except in an emergency involving an imminent threat to the safety or welfare of an individual or the public where no interpreter is available. Accordingly, the Department has revised the rule to state that ''[a] public accommodation shall not rely on a minor child to interpret or facilitate communication, except in an emergency involving an imminent threat to the safety or welfare of an individual or the public where there is no interpreter available.'' §36.303(c)(4). Sections 36.303(c)(3) and (c)(4) have no application in circumstances where an interpreter would not otherwise be required in order to provide effective communication (*e.g.*, in simple transactions such as purchasing movie tickets at a theater).

The Department stresses that privacy and confidentiality must be maintained but notes that covered entities, such as hospitals, that are subject to the Privacy Rules, 45 CFR parts 160 and 164, of the Health Insurance Portability and Accountability Act of 1996 (HIPAA), Public Law 104–191, are permitted to disclose to a patient's relative, close friend, or any other person identified by the patient (such as an interpreter) relevant patient information if the patient agrees to such disclosures. *See* 45 CFR parts 160 and 164. The agreement need not be in writing. Covered entities should consult the HIPAA Privacy Rules regarding other ways disclosures may be made to such persons.

With regard to emergency situations, proposed §36.303(c)(3) permitted reliance on an individual accompanying an individual with a disability to interpret or facilitate communication in an emergency involving a threat to the safety or welfare of an individual or the public. Commenters requested that the Department make clear that often a public accommodation can obtain appropriate auxiliary aids and services in advance of an emergency, particularly in anticipated emergencies, such as predicted dangerous weather, or in certain medical situations, such as pending childbirth, by making necessary prearrangements. These commenters did not want public accommodations to be relieved of their responsibilities to provide effective communication in emergency situations, noting that the need for effective communication in emergencies is heightened. For the same reason, several commenters requested a separate rule that requires public accommodations to provide timely and effective communication in the event of an emergency.

One group of commenters asked that the Department narrow the regulation permitting reliance on a companion to interpret or facilitate communication in emergency situations so that it is not available to entities with responsibilities for emergency preparedness and response. Some commenters noted that certain exigent circumstances, such as those that exist during and, perhaps, immediately after a major hurricane, temporarily may excuse public accommodations of their responsibilities to provide effective communication. However, they asked that the Department clarify that these obligations are ongoing, and that as soon as such situations begin to abate or become stabilized, the public accommodation must provide effective communication.

The Department recognizes the need for effective communication is critical in emergency situations. After due consideration of all of these concerns raised by commenters, the Department has revised §36.303(c) to narrow the exception permitting reliance on individuals accompanying the individual with a disability during an emergency to make it clear that it applies only to emergencies involving an ''imminent threat to the safety or welfare of an individual or the public * * *.'' §36.303(c)(3)–(4). The Department wishes to emphasize, however, that application of this exception is narrowly tailored to emergencies involving an imminent threat to the safety or welfare of individuals or the public. Arguably, all visits to an emergency room are by definition emergencies. Likewise, an argument can be made that most situations to which emergency workers respond involve, in one way or another, a threat to the safety or welfare of an individual or the public. The imminent threat exception in §36.303(c)(3)–(4) is not intended to apply to typical and foreseeable emergency situations that are part of the normal operations of these institutions. As such, a public accommodation may rely on an accompanying individual to interpret or facilitate communication under the §36.303(c)(3)–(4) imminent threat exception only where there is a true emergency, *i.e.*, where any delay in providing immediate services to the individual could have life-altering or life-ending consequences.

Telecommunications. In addition to the changes discussed in §36.303(b) regarding telecommunications, telephones, and text telephones, the Department has adopted provisions in §36.303(d) of the final rule (which also were included in the NPRM) requiring that public accommodations must not disconnect or refuse to take calls from FCC-approved telecommunications relay systems, including Internet-based relay systems. Commenters from some State agencies, many advocacy organizations, and individuals strongly urged the Department to mandate such action because of the high proportion of TTY calls and relay service calls to title III entities that are not completed because of phone systems or employees not taking the calls. This refusal presents a significant obstacle for persons using TTYs who do business with public accommodations and denies persons with disabilities telephone access for business that typically is handled over the telephone.

Section 36.303(d)(1)(ii) of the NPRM added public telephones equipped with volume control mechanisms and hearing aid-compatible telephones to the examples of types of telephone equipment to be provided. Commenters from the disability community and from telecommunications relay service providers argued that requirements for these particular features on telephones are obsolete not only because the deaf and hard of hearing community uses video technology more frequently than other types of telecommunication, but also because all public coin phones have been hearing aid compatible since 1983, pursuant to the Telecommunications for the Disabled Act of 1982, 47 U.S.C. 610. The Hearing Aid Compatibility Act of 1988, 47 U.S.C. 610, extended this requirement to all wireline telephones imported into or manufactured in the United States since 1989. In 1997, the FCC further required that all such phones also be equipped with volume control. *See* 47 CFR 68.6. Given these existing statutory obligations, the proposed language is unnecessary. Accordingly, the Department has deleted that language from the final rule.

The Department understands that there are many new devices and advances in technology that should be included in the definition of available auxiliary aids and is including many of the telecommunications devices and some new technology. While much of this technology is not expensive and should be available to most title III entities, there may be legitimate reasons why in a particular situation some of these new and developing auxiliary aids may not be available, may be prohibitively costly (thus supporting an undue burden defense), or may otherwise not be suitable given other circumstances related to the particular terrain, situation, or functionality in specialized areas where security, among other things, may be a factor limiting the appropriateness of the use of a particular technology or device. The Department recognizes that the available new technology may provide more effective communication than existing technology and that providing effective communication often will include use of new technology and video relay services, as well as interpreters. However, the Department has not mandated that title III entities make all technology or services available upon demand in all situations. When a public accommodation provides the opportunity to make outgoing phone calls on more than an incidental-convenience basis, it shall make available accessible public telephones, TTYs, or other telecommunications products and systems for use by an individual who is deaf or hard of hearing, or has a speech impairment.

Video remote interpreting (VRI) services. In §36.303(f) of the NPRM, the Department proposed the inclusion of four performance standards for VRI (which the NPRM termed video interpreting services (VIS)), for effective communication: (1) High-quality, clear, real-time, full-motion video, and audio over a dedicated high-speed Internet connection; (2) a clear, sufficiently large, and sharply delineated picture of the participants' heads, arms, hands, and fingers, regardless of their body position; (3) clear transmission of voices; and (4) persons who are trained to set

up and operate the VIS quickly and efficiently.

Commenters generally approved of these proposed performance standards, but recommended that some additional standards be included in the final rule. For persons who are deaf with limited vision, commenters requested that the Department include an explicit requirement that interpreters wear high-contrast clothing with no patterns that might distract from their hands as they are interpreting, so that a person with limited vision could still see the signs made by the interpreter. While the Department reiterates the importance of such practices in the delivery of effective VRI as well as in-person interpreting, the Department declines to adopt such performance standards as part of this rule. In general, professional interpreters already follow such practices, as the Code of Professional Conduct for interpreters developed by the Registry of Interpreter for the Deaf and the National Association of the Deaf incorporates attire considerations into their standards of professionalism and conduct. Moreover, as a result of this code, many VRI agencies have adopted detailed dress standards that interpreters hired by the agency must follow. Commenters also urged explicit requirement of a clear image of the face and eyes of the interpreter and others. Because the face includes the eyes, the Department has amended §36.303(f)(2) of the final rule to include a requirement that the interpreter's face be displayed. Other commenters requested requirement of a wide-bandwidth video connection for the VRI system, and the Department has included this requirement in §36.303(f)(1) of the final rule.

ATMs. The 2010 Standards set out detailed requirements for ATMs, including communication-related requirements to make ATMs usable by individuals who are blind or have low vision. In the NPRM, the Department discussed the application of a safe harbor to the communication-related elements of ATMs. The NPRM explained that the Department considers the communication-related elements of ATMs to be auxiliary aids and services, to which the safe harbor for elements built in compliance with the 1991 standards does not apply.

The Department received several comments regarding this issue. Several commenters representing banks objected to the exclusion of communication-related aspects of ATMs from the safe harbor provision. They explained that the useful life of ATMs—on average 10 years—was longer than the Department noted; thus, without the safe harbor, banks would be forced to retrofit many ATMs in order to comply with the proposed regulation. Such retrofitting, they noted, would be costly to the industry. A few representatives of the disability community commented that communication-related aspects of ATMs should be excluded from the safe harbor.

The Department consistently has taken the position that the communication-related elements of ATMs are auxiliary aids and services, rather than structural elements. *See* 28 CFR part 36, app. B at 728 (2009). Thus, the safe harbor provision does not apply to these elements. The Department believes that the limitations on the effective communication requirements, which provide that a covered entity does not have to take measures that would result in a fundamental alteration of its program or would cause undue burdens, provide adequate protection to covered entities that operate ATMs.

Captioning at sporting venues. In §36.303(g) of the NPRM, the Department proposed that sports stadiums that have a capacity of 25,000 or more shall provide captioning for safety and emergency information on scoreboards and video monitors. In addition, the Department posed four questions about captioning of information, especially safety and emergency information announcements, provided over public address (PA) systems. The Department received many detailed and divergent responses to each of the four questions and the proposed regulatory text. Because comments submitted on the Department's title II and title III proposals were intertwined, because of the similarity of issues involved for title II entities and title III entities, and in recognition of the fact that many large sports stadiums are covered by both title II and title III as joint operations of State or local government and one or more public accommodations, the Department presents here a single consolidated review and summary of the issues raised in comments.

The Department asked whether requiring captioning of safety and emergency information made over the public address system in stadiums seating fewer than 25,000 would create an undue burden for smaller entities, and whether it would be feasible for small stadiums to provide such captioning, or whether a larger threshold, such as sports stadiums with a capacity of 50,000 or more, would be appropriate.

There was a consensus among the commenters, including disability advocates as well as venue owners and stadium designers and operators, that using the stadium size or seating capacity should not be the exclusive deciding factor for any obligation to provide captioning for safety and emergency information broadcast over the PA system. Most disability advocacy organizations and individuals with disabilities complained that using size or seating capacity as a threshold for captioning safety and emergency information would undermine the ''undue burden'' defense found in both titles II and III. Many commenters provided examples of facilities such as professional hockey arenas

that seat less than 25,000 fans but that, commenters argued, should be able to provide real-time captioning. Other commenters suggested that some high school or college stadiums, for example, may hold 25,000 fans or more and yet lack the resources to provide real-time captioning. Many commenters noted that real-time captioning would require use of trained stenographers, and that most high school and college sports facilities rely upon volunteers to operate scoreboards and PA systems and they would not be qualified stenographers, especially in case of an emergency. One national association noted that the typical stenographer expense for a professional football game in Washington, DC, is about $550 per game. Similarly, one trade association representing venues estimated that the cost for a professional stenographer at a sporting event runs between $500 and $1,000 per game or event, the cost of which, they argued, would be unduly burdensome in many cases. Some commenters posited that schools that do not sell tickets to athletic events would be challenged to meet such expenses, in contrast to major college athletic programs and professional sports teams, which would be less likely to prevail using an ''undue burden'' defense.

Some venue owners and operators and other covered entities also argued that stadium size should not be the key consideration for whether scoreboard captioning will be required. Instead, these entities suggested that equipment already installed in the stadium, including necessary electrical equipment and backup power supply, should be the determining factor for whether captioning is mandated. Many commenters argued that the requirement to provide captioning should apply only to stadiums with scoreboards that meet the National Fire Protection Association (NFPA) National Fire Alarm Code. Commenters reported that NFPA 72 requires at least two independent and reliable power supplies for emergency information systems, including one source that is a generator or a battery sufficient to run the system in the event the primary power fails. Alternatively, some stadium designers and title II entities commented that the requirement should arise when the facility has at least one elevator providing firefighter emergency operation, along with approval of authorities with responsibility for fire safety. An organization concerned with fire safety codes commented that the Department lacks the expertise to regulate on this topic. Other commenters argued for flexibility in the requirements for providing captioning and contended that any requirement should apply only to stadiums constructed after the effective date of the regulation.

In the NPRM, the Department also asked whether the rule should address the specific means of captioning equipment, whether captioning should be provided through any effective means (*e.g.*, scoreboards, line boards, handheld devices, or other means), or whether some means, such as handheld devices, should be eliminated as options. This question elicited many comments from advocates for persons with disabilities as well as from covered entities. Advocacy organizations and individuals with experience using handheld devices argued that such devices do not provide effective communication. These commenters noted that information is often delayed in the transmission to such devices, making them hard to use when following action on the playing field or in the event of an emergency when the crowd is already reacting to aural information provided over the PA system well before it is received on the handheld device.

Several venue owners and operators and others commented that handheld technology offers advantages of flexibility and portability so that it may be used successfully regardless of where in the facility the user is located, even when not in the line of sight of a scoreboard or other captioning system. Still other commenters urged the Department not to regulate in such a way as to limit innovation and use of such technology now and in the future. Cost considerations were included in comments from some stadium designers and venue owners and operators who reported that the cost of providing handheld systems is far less than the cost of providing real-time captioning on scoreboards, especially in facilities that do not currently have the capacity to provide real-time captions on existing equipment. Others noted that handheld technology is not covered by fire and safety model codes, including the NFPA, and thus would be more easily adapted into existing facilities if captioning were required by the Department.

The Department also asked about requiring open captioning of all public address announcements, rather than limiting the captioning requirement to safety and emergency information. A variety of advocates and persons with disabilities argued that all information broadcast over a PA system should be captioned in real time at all facilities in order to provide effective communication, and that a requirement only to provide emergency and safety information would not be sufficient. A few organizations representing persons with disabilities commented that installation of new systems should not be required, but that all systems within existing facilities that are capable of providing captioning should provide captioning of information to the maximum extent possible. Several organizations for persons with disabilities commented that all facilities should include in their safety planning measures a requirement that all aurally provided information for patrons with communication disabilities be captioned. Some

advocates suggested that demand for captions will only increase as the number of deaf and hard of hearing persons grows with the aging of the general population and with increasing numbers of veterans returning from war with disabilities. Multiple commenters noted that the captioning would benefit others as well as those with communication disabilities.

By contrast, venue owners and operators and others commented that the action on the sports field is self-explanatory and does not require captioning. These commenters objected to an explicit requirement to provide real-time captioning for all information broadcast on the PA system at a sporting event. Other commenters objected to requiring captioning even for emergency and safety information over the scoreboard rather than through some other means. By contrast, venue operators, State government agencies, and some model code groups, including the NFPA, commented that emergency and safety information must be provided in an accessible format and that public safety is a paramount concern. Other commenters argued that the best method to deliver safety and emergency information would be television monitors showing local TV broadcasts with captions already mandated by the FCC. Some commenters posited that the most reliable information about a major emergency would be provided on the television news broadcasts. They argued that television monitors may be located throughout the facility, improving line of sight for patrons, some of whom might not be able to see the scoreboard from their seats or elsewhere in the facility. Some stadium designers, venue operators, and model code groups pointed out that video monitors are not regulated by the NFPA or other agencies, so that such monitors could be more easily provided. Video monitors may receive transmissions from within the facility and could provide real-time captions if there is the necessary software and equipment to feed the captioning signal to a closed video network within the facility. Several commenters suggested that using monitors would be preferable to requiring captions on the scoreboard if the regulation mandates real-time captioning. Some venue owners and operators argued that retrofitting existing stadiums with new systems could easily cost in the hundreds of thousands of dollars per scoreboard or system. Some stadium designers and others argued that captioning should be required only in stadiums built after the effective date of the regulation. For stadiums with existing systems that allow for real-time captioning, one commenter posited that dedicating the system exclusively to real-time captioning would lead to an annual loss of between two and three million dollars per stadium in revenue from advertising currently running in that space.

After carefully considering the wide range of public comments on this issue, the Department has concluded that the final rule will not provide additional requirements for effective communication or emergency information provided at sports stadiums at this time. The 1991 title II and title III regulations and statutory requirements are not in any way affected by this decision. The decision to postpone rulemaking on this complex issue is based on a number of factors, including the multiple layers of existing regulations by various agencies and levels of government, and the wide array of information, requests, and recommendations related to developing technology offered by the public. The diversity of existing information and communication systems and other characteristics among sports stadiums also complicates the regulation of captioning. The Department has concluded that further consideration and review is prudent before it issues specific regulatory requirements.

Movie captioning. In the NPRM, the Department stated that options were being considered to require movie theater owners and operators to exhibit movies that are captioned for patrons who are deaf or hard of hearing. Captioning makes films accessible to individuals whose hearing is too limited to benefit from assistive listening devices. Both open and closed captioning are examples of auxiliary aids and services required under the Department's 1991 title III regulation. *See* 28 CFR 36.303(b)(1). Open captions are similar to subtitles in that the text is visible to everyone in the theater, while closed captioning displays the written text of the audio only to those individuals who request it.

In the NPRM, the Department also stated that options were being considered to require movie theater owners and operators to exhibit movies with video description,[3] a technology that enables individuals who are blind or have low vision to enjoy movies by providing a spoken interpretation of key visual elements of a movie, such as actions, settings, facial expressions, costumes, and scene changes. The descriptions are narrated and recorded onto an audiotape or disk that can be synchronized with the film as it is projected. An audio recording is an example of an auxiliary aid and service required under the Department's 1991 title III regulation. *See* 28 CFR 36.303(b)(2).

The NPRM stated that technological advances since the early 1990s have made open

[3] In the NPRM, the Department referred to this technology as ''narrative description.'' 73 FR 34508, 34531 (June 17, 2008). Several commenters informed the Department that the more accurate and commonly understood term is ''video description,'' even though the subject is movies, not video, and so the Department decided to employ that term.

and closed captioning and video description for movies more readily available and effective and noted that the Department was considering options to require captioning and video description for movies exhibited by public accommodations. The NPRM also noted that the Department is aware that the movie industry is transitioning, in whole or in part, to movies in digital format and that movie theater owners and operators are beginning to purchase digital projectors. The Department noted in the NPRM that movie theater owners and operators with digital projectors may have available to them different capabilities than those without digital projectors. The Department sought comment regarding whether and how to require captioning and video description while the film industry makes this transition. In addition, the NPRM stated the Department's concern about the potential cost to exhibit captioned movies, noting that cost may vary depending upon whether open or closed captioning is used and whether or not digital projectors are used, and stated that the cost of captioning must stay within the parameters of the undue burden requirement in 28 CFR 36.303(a). The Department further noted that it understands the cost of video description equipment to be less than that for closed captioning. The Department then stated that it was considering the possibility of requiring public accommodations to exhibit all new movies in captioned format and with video description at every showing. The NPRM stated that the Department would not specify the types of captioning required, leaving such decisions to the discretion of the movie theater owners and operators.

In the NPRM, the Department requested public comment as to whether public accommodations should be required to exhibit all new movies in captioned format at every showing, whether it would be more appropriate to require captioning less frequently, and, if so, with what frequency captioning should be provided. The Department also inquired as to whether the requirement for captioning should be tied to the conversion of movies from film to the use of a digital format. The Department also asked for public comment regarding the exhibition of all new movies with narrative description, whether it would it be more appropriate to require narrative description less frequently, and whether narrative description of movies should be tied to the use of a digital format.

Representatives from the movie industry, a commenter from a non-profit organization, and a disability rights advocacy group provided information in their comments on the status of captioning and video description technology today as well as an update on the transition to digital cinema in the industry. A representative of major movie producers and distributors commented that traditionally open captions were created by ''burning'' the captions onto a special print of a selected movie, which the studios would make available to the exhibitors (movie theater owners and operators). Releases with open captions typically would be presented at special screenings. More recently, according to this commenter, alternative methods have been developed for presenting movies with open captions, but their common feature is that the captions are visible to all theatergoers. Closed captioning is an innovation in technology that was first made available in a feature film presentation in late 1997. Closed captioning technology currently in use allows viewers to see captions using a clear panel that is mounted in front of the viewer's seat.[4] According to commenters from the industry, the panel reflects captions that are shown in reverse on an LED display in the back of the theater, with captions appearing on or near the movie image. Moviegoers may use this technology at any showing at a theater that has been equipped with the technology, so that the theater does not have to arrange limited special screenings.

Video description technology also has existed since 1997, according to a commenter who works with the captioning and video description industry. According to a movie industry commenter, video description requires the creation of a separate script written by specially trained writers called ''describers.'' As the commenter explained, a describer initially listens to the movie without watching it in order to approximate the experience of an audience member who is blind or has low vision. Using software to map out the pauses in the soundtrack, the describer writes a description in the space available. After an initial script is written for video description, it is edited and checked for timing, continuity, accuracy, and a natural flow. A narrator then records the new script to match the corresponding movie. This same industry commenter said that video description currently is provided in theaters through screens equipped with the same type of technology as that used for closed captioning. As commenters explained, technologies in use today deliver video descriptions via infrared or FM listening systems to headsets worn by individuals who are blind or have low vision.

According to the commenter representing major movie producers and distributors, the

[4] Other closed captioning technologies for movies that have been developed but are not in use at this time include hand-held displays similar to a PDA (personal digital assistant); eyeglasses fitted with a prism over one lens; and projected bitmap captions. The PDA and eyeglass systems use a wireless transmitter to send the captions to the display device.

percentage of motion pictures produced with closed captioning by its member studios had grown to 88 percent of total releases by 2007; the percentage of motion pictures produced with open captioning by its member studios had grown to 78 percent of total releases by 2007; and the percentage of motion pictures provided with video description has ranged consistently between 50 percent and 60 percent of total releases. It is the movie producers and distributors, not the movie theater owners and operators, who determine what to caption and describe, the type of captioning to use, and the content of the captions and video description script. These same producers and distributors also assume the costs of captioning and describing movies. Movie theater owners and operators simply purchase the equipment to display the captions and play the video description in their auditoria.

The transition to digital cinema, considered by the industry to be one of the most profound advancements in motion picture production and technology of the last 100 years, will provide numerous advantages both for the industry and the audience. According to one commenter, currently there are sufficient standards and interim solutions to support captioning and video description now in digital format. Additionally, movie studios are supporting those efforts by providing accessibility tracks (captioning and video description) in many digital cinema content packages. Moreover, a group of industry commenters composed in pertinent part of members of the motion picture industry, the central standards organizations for this industry, and key digital equipment vendors, noted that they are participating in a joint venture to establish the remaining accessibility specifications and standards for access audio tracks. Access audio tracks are supplemental sound audio tracks for the hard of hearing and narrative audio tracks for individuals who have vision disabilities. According to a commenter and to industry documents, these standards were expected to be in place by spring 2009. According to a commenter, at that time, all of the major digital cinema equipment vendors were expected to have support for a variety of closed caption display and video description products. This same commenter stated that these technologies will be supported by the studios that produce and distribute feature films, by the theaters that show these films to the public, and by the full complement of equipment in the production, distribution, and display chain.

The initial investment for movie theater owners and operators to convert to digital cinema is expensive. One industry commenter estimated that converting theaters to digital projection costs between $70,000 and $100,000 per screen and that maintenance costs for digital projectors are estimated to run between $5,000 and $10,000 a year—approximately five times as expensive as the maintenance costs for film projectors. According to this same commenter, while there has been progress in making the conversion, only approximately 5,000 screens out of 38,794 nationwide have been converted, and the cost to make the remaining conversions involves a total investment of several billion dollars. According to another commenter, predictions as to when more than half of all screens will have been converted to digital projection are 10 years or more, depending on the finances of the movie theater owners and operators, the state of the economy, and the incentives supporting conversion. That said, according to one commenter who represents movie theater owners and operators, the majority of screens in the United States were expected to enter into agreements by the end of 2008 to convert to digital cinema. Most importantly, however, according to a few commenters, the systems in place today for captioning and video description will not become obsolete once a theater has converted to digital cinema but still can be used by the movie theater owner and operator to exhibit captions and video description. The only difference for a movie theater owner or operator will be the way the data is delivered to the captioning and video description equipment in place in an auditorium.

Despite the current availability of movies that are captioned and provide video description, movie theater owners and operators rarely exhibit the captions or descriptions. According to several commenters, less than 1 percent of all movies being exhibited in theaters are shown with captions.

Individuals with disabilities, advocacy groups, the representative from a non-profit, and representatives of State governments, including 11 State attorneys general, overwhelmingly supported issuance of a regulation requiring movie theater owners and operators to exhibit captioned and video described movies at all showings unless doing so would result in an undue burden or fundamental alteration of the goods and services offered by the public accommodation. In addition, this same group of commenters urged that any such regulation should be made effective now, and should not be tied to the conversion to digital cinema by the movie theater owners and operators. In support of such arguments, these commenters stated that the technology exists now to display movies with captions and video descriptions, regardless of whether the movie is exhibited on film or using digital cinema. Moreover, since the technology in use for displaying captions and video descriptions on film will be compatible with digital projection systems, they argued, there is no need to postpone implementation of a captioning or

video description regulation until the conversion to digital has been made. Furthermore, since the conversion to digital may take years, commenters urged the Department to issue a regulation requiring captioning and video description now, rather than several years from now.

Advocacy groups and the 11 State attorneys general also requested that any regulation include factors describing what constitutes effective captioning and video description. Recommendations included requiring that captioning be within the same line of sight to the screen as the movie so that individuals who are deaf or hard of hearing can watch the movie and read the captions at the same time; that the captioning be accessible from each seat; that the captions be of sufficient size and contrast to the background so as to be readable easily; and that the recent recommendations of the Telecommunications and Electronics and Information Technology Advisory Committee Report to the Access Board that captions be ''timely, accurate, complete, and efficient''[5] also be included.

The State attorneys general supported the Department's statement in the NPRM that the Department did not anticipate specifying which type of captioning to provide or what type of technology to use to provide video description, but would instead leave that to the discretion of the movie theater owners and operators. These State attorneys general opined that such discretion in the selection of the type of technology was consistent with the statutory and regulatory scheme of the ADA and would permit any new regulation to keep pace with future advancements in captioning and video description technology. These same commenters stated that such discretion may result in a mixed use of both closed captioning and open captioning, affording more choices both for the movie theater owners and operators and for individuals who are deaf or hard of hearing.

The representatives from the movie theater industry strongly urged the Department against issuing a regulation requiring captioning or video description. These commenters argued that the legislative history of the ADA expressly precluded regulating in the area of captioning. (These same commenters were silent with regard to video description on this issue.) The industry commenters also argued that to require movie theater owners and operators to exhibit captioned and video described movies would constitute a fundamental alteration in the nature of the goods and services offered by the movie theater owners and operators. In addition, some industry commenters argued that any such regulation by the Department would be inconsistent with the Access Board's guidelines. Also, these commenters noted the progress that has been made in the industry in making cinema more accessible even though there is no mandate to caption or describe movies, and they questioned whether any mandate is necessary. Finally, all the industry commenters argued that to require captioning or video description in 100 percent of movie theater screens for all showings would constitute an undue burden.

The comments have provided the Department with significant information on the state of the movie industry with regard to the availability of captioning and video description, the status of closed captioning technology, and the status of the transition to digital cinema. The Department also has given due consideration to the comments it has received from individuals, advocacy groups, governmental entities, and representatives of the movie industry. Recently, the United States Court of Appeals for the Ninth Circuit held that the ADA requires a chain of movie theaters to exhibit movies with closed captioning and video description unless the theaters can show that to do so would amount to a fundamental alteration or undue burden. *Arizona ex rel. Goddard* v. *Harkins Amusement Enterprises, Inc.*, 603 F.3d 666 (9th Cir. 2010). However, rather than issue specific regulatory text at this time, the Department has determined that it should obtain additional information regarding issues raised by commenters that were not contemplated at the time of the 2008 NPRM, supplemental technical information, and updated information regarding the current and future status of the conversion to digital cinema by movie theater owners and operators. To this end, the Department is planning to engage in rulemaking relating specifically to movie captioning under the ADA in the near future.

Section 36.304 Removal of Barriers

With the adoption of the 2010 Standards, an important issue that the Department must address is the effect that the new (referred to as ''supplemental'') and revised ADA Standards will have on the continuing obligation of public accommodations to remove architectural, transportation, and communication barriers in existing facilities to the extent that it is readily achievable to do so. *See* 42 U.S.C. 12182(b)(2)(A)(iv). This issue was not addressed in the 2004 ADAAG because it was outside the scope of the Access Board's statutory authority under the ADA and section 502 of the Rehabilitation Act of 1973. *See* 29

[5] *Refreshed Accessibility Standards and Guidelines in Telecommunications and Electronic and Information Technology* (April 2008), available at *http://www.access-board.gov/sec508/refresh/report/* (last visited June 24, 2010).

U.S.C. 792(b)(3)(A)–(B) (authorizing the Access Board to establish and maintain minimum guidelines for the standards issued pursuant to the Architectural Barriers Act of 1968 and titles II and III of the ADA). Responsibility for implementing title III's requirement that public accommodations eliminate barriers in existing facilities where such removal is readily achievable rests solely with the Department. The term ''existing facility'' is defined in §36.104 of the final rule. This definition is discussed in more detail above. *See* appendix A discussion of definitions (§36.104).

The requirements for barrier removal by public accommodations are established in the Department's title III regulation. 28 CFR 36.304. Under this regulation, the Department used the 1991 Standards as a guide to identify what constitutes an architectural barrier, as well as the specifications that covered entities must follow in making architectural changes to remove the barrier to the extent that such removal is readily achievable. 28 CFR 36.304(d); 28 CFR part 36, app. A (2009). With adoption of the final rule, public accommodations will now be guided by the 2010 Standards, defined in §36.104 as the 2004 ADAAG and the requirements contained in subpart D of 28 CFR part 36.

The 2010 Standards include technical and scoping specifications for a number of elements that were not addressed specifically in the 1991 Standards; these new requirements were identified as ''supplemental requirements'' in the NPRM. The 2010 Standards also include revisions to technical or scoping specifications for certain elements that were addressed in the 1991 Standards, *i.e.*, elements for which there already were technical and scoping specifications. Requirements for which there are revised technical or scoping specifications in the 2010 Standards are referred to in the NPRM as ''incremental changes.''

The Department expressed concern that requiring barrier removal for incremental changes might place unnecessary cost burdens on businesses that already had removed barriers in existing facilities in compliance with the 1991 Standards. With this rulemaking, the Department sought to strike an appropriate balance between ensuring that individuals with disabilities are provided access to facilities and mitigating potential financial burdens from barrier removal on existing places of public accommodation that satisfied their obligations under the 1991 Standards.

In the NPRM, the Department proposed several potential additions to §36.304(d) that might reduce such financial burdens. First, the Department proposed a safe harbor for elements in existing facilities that were compliant with the 1991 Standards. Under this approach, an element that is not altered after the effective date of the 2010 Standards and that complies with the scoping and technical requirements for that element in the 1991 Standards would not be required to undergo modification to comply with the 2010 Standards to satisfy the ADA's barrier removal obligations. The public accommodation would thus be deemed to have met its barrier removal obligation with respect to that element.

The Department received many comments on this issue during the 60-day public comment period. After consideration of all relevant information presented on the issue, it is the Department's view that this element-by-element safe harbor provision should be retained in the final rule. This issue is discussed further below.

Second, the NPRM proposed several exceptions and exemptions from certain supplemental requirements to mitigate the barrier removal obligations of existing play areas and recreation facilities under the 2004 ADAAG. These proposals elicited many comments from both the business and disability communities. After consideration of all relevant information presented on the issue, it is the Department's view that these exceptions and exemptions should not be retained in the final rule. The specific proposals and comments, and the Department's conclusions, are discussed below.

Third, the NPRM proposed a new safe harbor approach to readily achievable barrier removal as applied to qualified small businesses. This proposed small business safe harbor was based on suggestions from small business advocacy groups that requested clearer guidance on the barrier removal obligations for small businesses. According to these groups, the Department's traditional approach to barrier removal disproportionately affects small businesses. They argued that most small businesses owners neither are equipped to understand the ADA Standards nor can they afford the architects, consultants, and attorneys that might provide some level of assurance of compliance with the ADA. For these same reasons, these commenters contended, small business owners are vulnerable to litigation, particularly lawsuits arising under title III, and often are forced to settle because the ADA Standards' complexity makes inadvertent noncompliance likely, even when a small business owner is acting in good faith, or because the business cannot afford the costs of litigation.

To address these and similar concerns, the NPRM proposed a level of barrier removal expenditures at which qualified small businesses would be deemed to have met their readily achievable barrier removal obligations for certain tax years. This safe harbor would have provided some protection from litigation because compliance could be assessed easily. Such a rule, the Department believed, also could further accessibility, because qualified small businesses would have

an incentive to incorporate barrier removal into short- and long-term planning. The Department recognized that a qualified small business safe harbor would be a significant change to the Department's title III enforcement scheme. Accordingly, the Department sought comment on whether such an approach would further the aims underlying the statute's barrier removal provisions, and, if so, the appropriate parameters of the provision.

After consideration of the many comments received on this issue, the Department has decided not to include a qualified small business safe harbor in the final rule. This decision is discussed more fully below.

Element-by-element safe harbor for public accommodations. Public accommodations have a continuing obligation to remove certain architectural, communications, and transportation barriers in existing facilities to the extent readily achievable. 42 U.S.C. 12182(b)(2)(A)(iv). Because the Department uses the ADA Standards as a guide to identifying what constitutes an architectural barrier, the 2010 Standards, once they become effective, will provide a new reference point for assessing an entity's barrier removal obligations. The 2010 Standards introduce technical and scoping specifications for many elements that were not included in the 1991 Standards. Accordingly, public accommodations will have to consider these supplemental requirements when evaluating whether there are covered barriers in existing facilities, and, if so, remove them to the extent readily achievable. Also included in the 2010 Standards are revised technical and scoping requirements for elements that were addressed in the 1991 Standards. These incremental changes were made to address technological changes that have occurred since the promulgation of the 1991 Standards, to reflect additional study by the Access Board, and to harmonize ADAAG requirements with the model codes.

In the NPRM, the Department sought input on a safe harbor in proposed §36.304(d)(2) intended to address concerns about the practical effects of the incremental changes on public accommodations' readily achievable barrier removal obligations. The proposed element-by-element safe harbor provided that in existing facilities elements that are, as of the effective date of the 2010 Standards, fully compliant with the applicable technical and scoping requirements in the 1991 Standards, need not be modified or retrofitted to meet the 2010 Standards, until and unless those elements are altered. The Department posited that it would be an inefficient use of resources to require covered entities that have complied with the 1991 Standards to retrofit already compliant elements when the change might only provide a minimal improvement in accessibility. In addition, the Department was concerned that covered entities would have a strong disincentive for voluntary compliance if every time the applicable standards were revised covered entities would be required once again to modify elements to keep pace with new requirements. The Department recognized that revisions to some elements might confer a significant benefit on some individuals with disabilities and because of the safe harbor these benefits would be unavailable until the facility undergoes alterations.

The Department received many comments on this issue from the business and disability communities. Business owners and operators, industry groups and trade associations, and business advocacy organizations strongly supported the element-by-element safe harbor. By contrast, disability advocacy organizations and individuals commenting on behalf of the disability community were opposed to this safe harbor with near unanimity.

Businesses and business groups agreed with the concerns outlined by the Department in the NPRM, and asserted that the element-by-element safe harbor is integral to ensuring continued good faith compliance efforts by covered entities. These commenters argued that the financial cost and business disruption resulting from retrofitting elements constructed or previously modified to comply with 1991 Standards would be detrimental to nearly all businesses and not readily achievable for most. They contended that it would be fundamentally unfair to place these entities in a position where, despite full compliance with the 1991 Standards, the entities would now, overnight, be vulnerable to barrier removal litigation. They further contended that public accommodations will have little incentive to undertake large barrier removal projects or incorporate barrier removal into long-term planning if there is no assurance that the actions taken and money spent for barrier removal would offer some protection from litigation. One commenter also pointed out that the proposed safe harbor would be consistent with practices under other Federal accessibility standards, including the Uniform Federal Accessibility Standards (UFAS) and the ADAAG.

Some business commenters urged the Department to expand the element-by-element safe harbor to include supplemental requirements. These commenters argued that imposing the 2010 Standards on existing facilities will provide a strong incentive for such facilities to eliminate some elements entirely, particularly where the element is not critical to the public accommodation's business or operations (*e.g.,* play areas in fast food restaurants) or the cost of retrofitting is significant. Some of these same commenters urged the Department to include within the safe harbor those elements not

covered by the 1991 Standards, but which an entity had built in compliance with State or local accessibility laws. Other commenters requested safe harbor protection where a business had attempted barrier removal prior to the establishment of technical and scoping requirements for a particular element (*e.g.,* play area equipment) if the business could show that the element now covered by the 2010 Standards was functionally accessible.

Other commenters noted ambiguity in the NPRM as to whether the element-by-element safe harbor applies only to elements that comply fully with the 1991 Standards, or also encompasses elements that comply with the 1991 Standards to the extent readily achievable. Some commenters proposed that the safe harbor should exist in perpetuity—that an element subject to a safe harbor at one point in time also should be afforded the same protection with respect to all future revisions to the ADA Standards (as with many building codes). These groups contended that allowing permanent compliance with the 1991 Standards will ensure readily accessible and usable facilities while also mitigating the need for expensive and time-consuming documentation of changes and maintenance.

A number of commenters inquired about the effect of the element-by-element safe harbor on elements that are not in strict compliance with the 1991 Standards, but conform to the terms of settlement agreements or consent decrees resulting from private litigation or Federal enforcement actions. These commenters noted that litigation or threatened litigation often has resulted in compromise among parties as to what is readily achievable. Business groups argued that facilities that have made modifications subject to those negotiated agreements should not be subject to the risk of further litigation as a result of the 2010 Standards.

Lastly, some business groups that supported the element-by-element safe harbor nevertheless contended that a better approach would be to separate barrier removal altogether from the 2010 Standards, such that the 2010 Standards would not be used to determine whether access to an existing facility is impeded by architectural barriers. These commenters argued that application of the 2010 Standards to barrier removal obligations is contrary to the ADA's directive that barrier removal is required only where ''easily accomplishable and able to be carried out without much difficulty or expense,'' 42 U.S.C. 12181(9).

Nearly all commenters from the disability community objected to the proposed element-by-element safe harbor. These commenters asserted that the adoption of this safe harbor would permit and sanction the retention of outdated access standards even in cases where retrofitting to the 2010 Standards would be readily achievable. They argued that title III's readily achievable defense is adequate to address businesses' cost concerns, and rejected the premise that requiring businesses to retrofit currently compliant elements would be an inefficient use of resources where readily achievable to do so. The proposed regulations, these commenters asserted, incorporate advances in technology, design, and construction, and reflect congressional and societal understanding that accessibility is not a static concept and that the ADA is a civil rights law intended to maximize accessibility. Additionally, these commenters noted that since the 2004 revision of the ADAAG will not be the last, setting a precedent of safe harbors for compliant elements will have the effect of preserving and protecting layers of increasingly outdated accessibility standards.

Many commenters objected to the Department's characterization of the requirements subject to the safe harbor as reflecting only incremental changes and asserted that many of these incremental changes will result in significantly enhanced accessibility at little cost. The requirement concerning side-reach ranges was highlighted as an example of such requirements. Commenters from the disability community argued that the revised maximum side-reach range (from 54 inches to 48 inches) will result in a substantial increase in accessibility for many persons with disabilities—particularly individuals of short stature, for whom the revised reach range represents the difference between independent access to many features and dependence—and that the revisions should be made where readily achievable to do so. Business commenters, on the other hand, contended that application of the safe harbor to this requirement is critical because retrofitting items, such as light switches and thermostats often requires work (*e.g.,* rewiring, patching, painting, and re-wallpapering), that would be extremely burdensome for entities to undertake. These commenters argued that such a burden is not justified where many of the affected entities already have retrofitted to meet the 1991 Standards.

Some commenters that were opposed to the element-by-element safe harbor proposed that an entity's past efforts to comply with the 1991 Standards might appropriately be a factor in the readily achievable analysis. Several commenters proposed a temporary 5-year safe harbor that would provide reassurance and stability to covered entities that have recently taken proactive steps for barrier removal, but would also avoid the problems of preserving access deficits in perpetuity and creating multiple standards as subsequent updates are adopted.

After consideration of all relevant information presented on this issue during the comment period, the Department has decided to retain the proposed element-by-element safe harbor. Title III's architectural-

barrier provisions place the most significant requirements of accessibility on new construction and alterations. The aim is to require businesses to make their facilities fully accessible at the time they are first constructing or altering those facilities, when burdens are less and many design elements will necessarily be in flux, and to impose a correspondingly lesser duty on businesses that are not changing their facilities. The Department believes that it would be consistent with this statutory structure not to change the requirements for design elements that were specifically addressed in our prior standards for those facilities that were built or altered in full compliance with those standards. The Department similarly believes it would be consistent with the statutory scheme not to change the requirements for design elements that were specifically addressed in our prior standards for those existing facilities that came into full compliance with those standards. Accordingly, the final rule at § 36.304(d)(2)(i) provides that elements that have not been altered in existing facilities on or after March 15, 2012 and that comply with the corresponding technical and scoping specifications for those elements in the 1991 Standards are not required to be modified in order to comply with the requirements set forth in the 2010 Standards. The safe harbor adopted is consistent in principle with the proposed provision in the NPRM, and reflects the Department's determination that this approach furthers the statute's barrier removal provisions and promotes continued good-faith compliance by public accommodations.

The element-by-element safe harbor adopted in this final rule is a narrow one. The Department recognizes that this safe harbor will delay, in some cases, the increased accessibility that the incremental changes would provide and that for some individuals with disabilities the impact may be significant. This safe harbor, however, is not a blanket exemption for every element in existing facilities. Compliance with the 1991 Standards is determined on an element-by-element basis in each existing facility.

Section 36.304(d)(2)(ii)(A) provides that prior to the compliance date of the rule March 15, 2012, noncompliant elements that have not been altered are obligated to be modified to the extent readily achievable to comply with the requirements set forth in the 1991 Standards or the 2010 Standards. Section 36.304(d)(2)(ii)(B) provides that after the date the 2010 Standards take effect (18 months after publication of the rule), noncompliant elements that have not been altered must be modified to the extent readily achievable to comply with the requirements set forth in the 2010 Standards. Noncomplying newly constructed and altered elements may also be subject to the requirements of § 36.406(a)(5).

The Department has not expanded the scope of the element-by-element safe harbor beyond those elements subject to the incremental changes. The Department has added § 36.304(d)(2)(iii), explicitly clarifying that existing elements subject to supplemental requirements for which scoping and technical specifications are provided for the first time in the 2010 Standards (*e.g.*, play area requirements) are not covered by the safe harbor and, therefore, must be modified to comply with the 2010 Standards to the extent readily achievable. Section 36.304(d)(2)(iii) also identifies the elements in the 2010 Standards that are not eligible for the element-by-element safe harbor. The safe harbor also does not apply to the accessible routes not previously scoped in the 1991 standards, such as those required to connect the boundary of each area of sport activity, including soccer fields, basketball courts, baseball fields, running tracks, skating rinks, and areas surrounding a piece of gymnastic equipment. *See* Advisory note to section F206.2.2 of the 2010 Standards. The resource and fairness concerns underlying the element-by-element safe harbor are not implicated by barrier removal involving supplemental requirements. Public accommodations have not been subject previously to technical and scoping specifications for these supplemental requirements. Thus, with respect to supplemental requirements, the existing readily achievable standard best maximizes accessibility in the built environment without imposing unnecessary burdens on public accommodations.

The Department also has declined to expand the element-by-element safe harbor to cover existing elements subject to supplemental requirements that also may have been built in compliance with State or local accessibility laws. Measures taken to remove barriers under a Federal accessibility provision logically must be considered in regard to Federal standards, in this case the 2010 Standards. This approach is based on the Department's determination that reference to ADA Standards for barrier removal will promote certainty, safety, and good design while still permitting slight deviations through readily achievable alternative methods. The Department continues to believe that this approach provides an appropriate and workable framework for implementation of title III's barrier removal provisions. Because compliance with State or local accessibility codes is not a reliable indicator of effective access for purposes of the ADA Standards, the Department has decided not to include reliance on such codes as part of the safe harbor provision.

Only elements compliant with the 1991 Standards are eligible for the safe harbor. Thus, where a public accommodation attempted barrier removal but full compliance with the 1991 Standards was not readily

achievable, the modified element does not fall within the scope of the safe harbor provision. A public accommodation at any point in time must remove barriers to the extent readily achievable. For existing elements, for which removal is not readily achievable at any given time, the public accommodation must provide its goods, services, facilities, privileges, advantages, or accommodations through alternative methods that are readily achievable. *See* 42 U.S.C. 12182(b)(2)(A)(iv), (v).

One-time evaluation and implementation of the readily achievable standard is not the end of the public accommodation's barrier-removal obligation. Public accommodations have a continuing obligation to reevaluate barrier removal on a regular basis. For example, if a public accommodation identified barriers under the 1991 Standards but did not remove them because removal was not readily achievable based on cost considerations, it has a continuing obligation to remove these barriers if the economic considerations for the public accommodation change. The fact that the public accommodation has been providing its goods or services through alternative methods does not negate the continuing obligation to assess whether removal of the barrier at issue has become readily achievable. Public accommodations should incorporate consideration of their continuing barrier removal obligations in both short-term and long-term business planning.

The Department notes that commenters across the board expressed concern with recordkeeping burdens implicated by the element-by-element safe harbor. Businesses noted the additional costs and administrative burdens associated with identifying elements that fall within the element-by-element safe harbor, as well as tracking, documenting, and maintaining data on installation dates. Disability advocates expressed concern that varying compliance standards will make enforcement efforts more difficult, and urged the Department to clarify that title III entities bear the burden of proof regarding entitlement to safe harbor protection. The Department emphasizes that public accommodations wishing to benefit from the element-by-element safe harbor must demonstrate their safe harbor eligibility. The Department encourages public accommodations to take appropriate steps to confirm and document the compliance of existing elements with the 1991 Standards. Finally, while the Department has decided not to adopt in this rulemaking the suggestion by some commenters to make the protection afforded by the element-by-element safe harbor temporary, the Department believes this proposal merits further consideration. The Department, therefore, will continue to evaluate the efficacy and appropriateness of a safe harbor expiration or sunset provision.

Application to specific scenarios raised in comments. In response to the NPRM, the Department received a number of comments that raised issues regarding application of the element-by-element safe harbor to particular situations. Business commenters requested guidance on whether the replacement for a broken or malfunctioning element that is covered by the 1991 Standards would have to comply with the 2010 Standards. These commenters expressed concern that in some cases replacement of a broken fixture might necessitate moving a number of other accessible fixtures (such as in a bathroom) in order to comply with the fixture and space requirements of the 2010 Standards. Others questioned the effect of the new standards where an entity replaces an existing element currently protected by the safe harbor provision for water or energy conservation reasons. The Department intends to address these types of scenarios in technical guidance.

Effective date for barrier removal. Several commenters expressed concern that the NPRM did not propose a transition period for applying the 2004 ADAAG to barrier removal in existing facilities in cases where the safe harbors do not apply. These commenters argued that for newly covered elements, they needed time to hire attorneys and consultants to assess the impact of the new requirements, determine whether they need to make additional retrofits, price those retrofits, assess whether the change actually is ''readily achievable,'' obtain approval for the removal from owners who must pay for the changes, obtain permits, and then do the actual work. The commenters recognized that there may be some barrier removal actions that require little planning, but stated that other actions cost significantly more and require more budgeting, planning, and construction time.

Barrier removal has been an ongoing requirement that has applied to public accommodations since the original regulation took effect on January 26, 1992. The final rule maintains the existing regulatory provision that barrier removal does not have to be undertaken unless it is ''readily achievable.'' The Department has provided in §36.304(d)(2)(ii)(B) that public accommodations are not required to apply the 2010 Standards to barrier removal until 18 months after the publication date of this rule. It is the Department's view that 18 months is a sufficient amount of time for application of the 2010 Standards to barrier removal for those elements not subject to the safe harbor. This is also consistent with the compliance date the Department has specified for applying the 2010 Standards to new construction and alterations.

Reduced scoping for play areas and other recreation facilities.

Play areas. The Access Board published final guidelines for play areas in October 2000. 65 FR 62498 (Oct. 18, 2000). The guidelines include requirements for ground-level and elevated play components, accessible routes connecting the components, accessible ground surfaces, and maintenance of those surfaces. They have been referenced in Federal playground construction and safety guidelines and in some State and local codes and have been used voluntarily when many play areas across the country have been altered or constructed.

In adopting the 2004 ADAAG (which includes the play area guidelines published in 2000), the Department acknowledges both the importance of integrated, full access to play areas for children and parents with disabilities as well as the need to avoid placing an untenable fiscal burden on businesses. Consequently, the Department asked seven questions in the NPRM related to existing play areas. Two questions related to safe harbors: one on the appropriateness of a general safe harbor for existing play areas and another on public accommodations that have complied with State or local standards specific to play areas. The others related to reduced scoping, limited exemptions, and whether there is a ''tipping point'' at which the costs of compliance with supplemental requirements would be so burdensome that a public accommodation would shut down a program rather than comply with the new requirements. In the nearly 100 comments received on title III play areas, the majority of commenters strongly opposed all safe harbors, exemptions, and reductions in scoping, and questioned the feasibility of determining a tipping point. A smaller number of commenters advocated for a safe harbor from compliance with the 2004 ADAAG play area requirements along with reduced scoping and exemptions for both readily achievable barrier removal and alterations.

Commenters were split as to whether the Department should exempt owners and operators of public accommodations from compliance with the supplemental requirements for play areas and recreation facilities and instead continue to determine accessibility in these facilities on a case-by-case basis under existing law. Many commenters were of the view that the exemption was not necessary because concerns of financial burden are addressed adequately by the defenses inherent in the standard for what constitutes readily achievable barrier removal. A number of commenters found the exemption inappropriate because no standards for play areas previously existed. Commenters also were concerned that a safe harbor applicable only to play areas and recreation facilities (but not to other facilities operated by a public accommodation) would create confusion, significantly limit access for children and parents with disabilities, and perpetuate the discrimination and segregation individuals with disabilities face in the important social arenas of play and recreation—areas where little access has been provided in the absence of specific standards. Many commenters suggested that instead of an exemption, the Department should provide guidance on barrier removal with respect to play areas and other recreation facilities.

Several commenters supported the exemption, mainly on the basis of the cost of barrier removal. More than one commenter noted that the most expensive aspect of barrier removal on existing play areas is the surfaces for the accessible routes and use zones. Several commenters expressed the view that where a play area is ancillary to a public accommodation (*e.g.*, in quick service restaurants or shopping centers), the play area should be exempt from compliance with the supplemental requirements because barrier removal would be too costly, and as a result, the public accommodation might eliminate the area.

The Department has been persuaded that the ADA's approach to barrier removal, the readily achievable standard, provides the appropriate balance for the application of the 2010 Standards to existing play areas. Thus, in existing playgrounds, public accommodations will be required to remove barriers to access where these barriers can be removed without much difficulty or expense.

The NPRM asked if there are State and local standards specifically regarding play and recreation area accessibility and whether facilities currently governed by, and in compliance with, such State and local standards or codes should be subject to a safe harbor from compliance with similar applicable requirements in the 2004 ADAAG. The Department also requested comments on whether it would be appropriate for the Access Board to consider the implementation of guidelines that would extend such a safe harbor to play and recreation areas undertaking alterations. In response, no comprehensive State or local codes were identified, and commenters generally noted that because the 2004 ADAAG contained comprehensive accessibility requirements for these unique areas, public accommodations should not be afforded a safe harbor from compliance with them when altering play and recreation areas. The Department is persuaded by these comments that there is insufficient basis to apply a safe harbor for readily achievable barrier removal or alterations for play areas built in compliance with State or local laws.

In the NPRM, the Department requested that public accommodations identify a ''tipping point'' at which the costs of compliance with the supplemental requirements for existing play areas would be so burdensome that the entity simply would shut down the playground. In response, no tipping point

was identified. Some commenters noted, however, that the scope of the requirements may create the choice between wholesale replacement of play areas and discontinuance of some play areas, while others speculated that some public accommodations may remove play areas that are merely ancillary amenities rather than incur the cost of barrier removal under the 2010 Standards. The Department has decided that the comments did not establish any clear tipping point and therefore that no regulatory response is appropriate in this area.

The NPRM also asked for comment about the potential effect of exempting existing play areas of less than 1,000 square feet in size from the requirements applicable to play areas. Many trade and business associations favored exempting these small play areas, with some arguing that where the play areas are only ancillary amenities, the cost of barrier removal may dictate that they be closed down. Some commenters sought guidance on the definition of a 1,000-square-foot play area, seeking clarification that seating and bathroom spaces associated with a play area are not included in the size definition. Disability rights advocates, by contrast, overwhelmingly opposed this exemption, arguing that these play areas may be some of the few available in a community; that restaurants and day care facilities are important places for socialization between children with disabilities and those without disabilities; that integrated play is important to the mission of day care centers and that many day care centers and play areas in large cities, such as New York City, have play areas that are less than 1,000 square feet in size; and that 1,000 square feet was an arbitrary size requirement.

The Department agrees that children with disabilities are entitled to access to integrated play opportunities. However, the Department is aware that small public accommodations are concerned about the costs and efforts associated with barrier removal. The Department has given careful consideration as to how best to insulate small entities from overly burdensome costs and undertakings and has concluded that the existing readily achievable standard, not a separate exemption, is an effective and employable method by which to protect these entities. Under the existing readily achievable standard, small public accommodations would be required to comply only with the scoping and technical requirements of the 2010 Standards that are easily accomplishable and able to be carried out without much difficulty or expense. Thus, concerns about prohibitive costs and efforts clearly are addressed by the existing readily achievable standard. Moreover, as evidenced by comments inquiring as to how 1,000-square-foot play areas are to be measured and complaining that the 1,000-square-foot cut-off is arbitrary, the exemption posited in the NPRM would have been difficult to apply. Finally, a separate exemption would have created confusion as to whether, or when, to apply the exemption or the readily achievable standard. Consequently, the Department has decided that an exemption, separate and apart from the readily achievable standard, is not appropriate or necessary for small private play areas.

In the NPRM, the Department requested public comment as to whether existing play areas should be permitted to substitute additional ground-level play components for the elevated play components that they otherwise would have been required to make accessible. Most commenters opposed this substitution because the guidelines as well as considerations of ''readily achievable barrier removal'' inherently contain the flexibility necessary for a variety of situations. Such commenters also noted that the Access Board adopted extensive guidelines with ample public input, including significant negotiation and balancing of costs. In addition, commenters advised that including additional ground level play components might result in higher costs because more accessible route surfaces might be required. A limited number of commenters favored substitution. The Department is persuaded by these comments that the proposed substitution of elements may not be beneficial. The current rules applicable to readily achievable barrier removal will be used to determine the number and type of accessible elements appropriate for a specific facility.

In the NPRM, the Department requested public comment on whether it would be appropriate for the Access Board to consider issuing guidelines for alterations to play and recreation facilities that would permit reduced scoping of accessible components or substitution of ground level play components in lieu of elevated play components. The Department received little input on this issue, and most commenters disfavored the suggestion. One commenter that supported this approach conjectured that it would encourage public accommodations to maintain and improve their playgrounds as well as provide more accessibility. The Department is persuaded that it is not necessary to ask the Access Board to revisit this issue.

The NPRM also asked whether only one play area of each type should be required to comply at existing sites with multiple play areas and whether there are other select requirements applicable to play areas in the 2004 ADAAG for which the Department should consider exemptions or reduced scoping. Some commenters were opposed to the concept of requiring compliance at one play area of each type at a site with multiple play areas, citing lack of choice and ongoing segregation of children and adults with disabilities. Other commenters who supported

an exemption and reduced scoping for alterations noted that the play equipment industry has adjusted to, and does not take issue with, the provisions of the 2004 ADAAG; however, they asked for some flexibility in the barrier removal requirements as applied to play equipment, arguing that augmentation of the existing equipment and installation of accessible play surfacing equates to wholesale replacement of the play equipment. The Department is persuaded that the current rules applicable to readily achievable barrier removal should be used to decide which play areas must comply with the supplemental requirements presented in the 2010 Standards.

Swimming pools, wading pools, saunas, and steam rooms. Section 36.304(d)(3)(ii) in the NPRM specified that for measures taken to comply with the barrier removal requirements, existing swimming pools with at least 300 linear feet of swimming pool wall would need to provide only one accessible means of entry that complies with section 1009.2 or section 1009.3 of the 2004 ADAAG, instead of the two means required for new construction. Commenters opposed the Department's reducing the scoping from that required in the 2004 ADAAG. The following were among the factors cited in comments: that swimming is a common therapeutic form of exercise for many individuals with disabilities; that the cost of a swimming pool lift or other options for pool access is readily achievable and can be accomplished without much difficulty or expense; and that the readily achievable standard already provides public accommodations with a means to reduce their scoping requirements. A few commenters cited safety concerns resulting from having just one accessible means of access, and stated that because pools typically have one ladder for every 75 linear feet of pool wall, they should have more than one accessible means of egress. Other commenters either approved or did not oppose providing one accessible means of access for larger pools so long as a lift was used.

Section 36.304(d)(4)(ii) of the NPRM proposed to exempt existing swimming pools with fewer than 300 linear feet of swimming pool wall from the obligation to provide an accessible means of entry. Most commenters strongly opposed this provision, arguing that aquatic activity is a safe and beneficial form of exercise that is particularly appropriate for individuals with disabilities. Many argued that the readily achievable standard for barrier removal is available as a defense and is preferable to creating an exemption for pool operators for whom providing an accessible means of entry would be readily achievable. Commenters who supported this provision apparently assumed that providing an accessible means of entry would be readily achievable and that therefore the exemption is needed so that small pool operators do not have to provide an accessible means of entry.

The Department has carefully considered all the information available to it as well as the comments submitted on these two proposed exemptions for swimming pools owned or operated by title III entities. The Department acknowledges that swimming provides important therapeutic, exercise, and social benefits for many individuals with disabilities and is persuaded that exemption of the vast majority of privately owned or operated pools from the 2010 Standards is neither appropriate nor necessary. The Department agrees with the commenters that title III already contains sufficient limitations on private entities' obligations to remove barriers. In particular, the Department agrees that those public accommodations that can demonstrate that making particular existing swimming pools accessible in accordance with the 2010 Standards is not readily achievable are sufficiently protected from excessive compliance costs. Thus, the Department has eliminated proposed §36.304(d)(3)(ii) and (d)(4)(ii) from the final rule.

Proposed §36.304(d)(4)(iii) would have exempted existing saunas and steam rooms that seat only two individuals from the obligation to remove barriers. This provision generated far fewer comments than the provisions for swimming pools. People who commented were split fairly evenly between those who argued that the readily achievable standard for barrier removal should be applied to all existing saunas and steam rooms and those who argued that all existing saunas and steam rooms, regardless of size, should be exempt from any barrier removal obligations. The Department considered these comments and has decided to eliminate the exemption for existing saunas and steam rooms that seat only two people. Such an exemption for saunas and steam rooms that seat only two people is unnecessary because the readily achievable standard provides sufficient protection against barrier removal that is overly expensive or too difficult. Moreover, the Department believes barrier removal likely will not be readily achievable for most of these small saunas because the nature of their prefabricated forms, which include built-in seats, make it either technically infeasible or too difficult or expensive to remove barriers. Consequently a separate exemption for saunas and steam rooms would have been superfluous. Finally, employing the readily achievable standard for small saunas and steam rooms is consistent with the Department's decisions regarding the proposed exemptions for play areas and swimming pools.

Several commenters also argued in favor of a specific exemption for existing spas. The Department notes that the technically infeasible and readily achievable defenses are applicable equally to existing spas and declines to adopt such an exemption.

The Department also solicited comment on the possibility of exempting existing wading pools from the obligation to remove barriers where readily achievable. Most commenters stated that installing a sloped entry in an existing wading pool is not likely to be feasible. Because covered entities are not required to undertake modifications that are not readily achievable or that would be technically infeasible, the Department believes that the rule as drafted provides sufficient protection from unwarranted expense to the operators of small existing wading pools. Other existing wading pools, particularly those large wading pools found in facilities such as water parks, must be assessed on a case-by-case basis. Therefore, the Department has not included an exemption for wading pools in its final rule.

The Department received several comments recommending that existing wave pools be exempt from barrier removal requirements. The commenters pointed out that existing wave pools often have a sloped entry, but do not have the handrails, level landings, or edge protection required for accessible entry. Because pool bottom slabs are structural, they could be subject to catastrophic failure if the soil pressure stability or the under slab dewatering are not maintained during the installation of these accessibility features in an already-constructed pool. They also argue that the only safe design scenario is to design the wheelchair ramp, pool lift, or transfer access in a side cove where the mean water level largely is unaffected by the wave action, and that this additional construction to an existing wave pool is not readily achievable. If located in the main pool area, the handrails, stanchions, and edge protection for sloped entry will become underwater hazards when the wave action is pushing onto pool users, and the use of a pool lift will not be safe without a means of stabilizing the person against the forces of the waves while using the lift. They also pointed out that a wheelchair would pose a hazard to all wave pool users, in that the wave action might push other pool users into the wheelchair or push the wheelchair into other pool users. The wheelchair would have to be removed from the pool after the user has entered (and has transferred to a flotation device if needed). The commenters did not specify if these two latter concerns are applicable to all wave pools or only to those with more aggressive wave action. The Department has decided that the issue of modifications to wave pools is best addressed on a case-by-case basis, and therefore, this rule does not contain barrier removal exemptions applicable to wave pools.

The Department also received comments suggesting that it is not appropriate to require two accessible means of entry to wave pools, lazy rivers, sand bottom pools, and other water amusements that have only one point of entry. The Department agrees. The 2010 Standards (at section 242.2, Exception 2) provide that only one means of entry is required for wave pools, lazy rivers, sand bottom pools, and other water amusement where user access is limited to one area.

Other recreation facilities. In the NPRM, the Department asked about a number of issues relating to recreation facilities, such as team or player seating areas, areas of sport activity, exercise machines, boating facilities, fishing piers and platforms, golf courses, and miniature golf courses. The Department asked for public comment on the costs and benefits of applying the 2004 ADAAG to these spaces and facilities. The discussion of the comments received by the Department on these issues and the Department's response to those comments can be found in either the section entitled ''Other Issues'' of appendix A to this final rule.

Safe harbor for qualified small businesses. Section 36.304(d)(5) of the NPRM would have provided that a qualified small business would meet its obligation to remove architectural barriers where readily achievable for a given year if, during that tax year, the entity spent at least 1 percent of its gross revenue in the preceding tax year on measures undertaken in compliance with barrier removal requirements. Proposed §36.304(d)(5) has been omitted from the final rule.

The qualified small business safe harbor was proposed in response to small business advocates' requests for clearer guidance on when barrier removal is, and is not, readily achievable. According to these groups, the Department's approach to readily achievable barrier removal disproportionately affects small business for the following reasons: (1) Small businesses are more likely to operate in older buildings and facilities; (2) the 1991 Standards are too numerous and technical for most small business owners to understand and determine how they relate to State and local building or accessibility codes; and (3) small businesses are vulnerable to title III litigation and often are compelled to settle because they cannot afford the litigation costs involved in proving that an action is not readily achievable.

The 2010 Standards go a long way toward meeting the concern of small businesses with regard to achieving compliance with both Federal and State accessibility requirements, because the Access Board harmonized the 2004 ADAAG with the model codes that form the basis of most State and local accessibility codes. Moreover, the element-by-element safe harbor will ensure that unless and until a small business engages in alteration of affected elements, the small business will not have to retrofit elements that were constructed in compliance with the 1991 Standards or, with respect to elements in an existing facility, that were retrofitted to the 1991 Standards in conjunction with the business's

barrier removal obligation prior to the rule's compliance date.

In proposing an additional safe harbor for small businesses, the Department had sought to promulgate a rule that would provide small businesses a level of certainty in short-term and long-term planning with respect to barrier removal. This in turn would benefit individuals with disabilities in that it would encourage small businesses to consider and incorporate barrier removal in their yearly budgets. Such a rule also would provide some protection, through diminished litigation risks, to small businesses that undertake significant barrier removal projects.

As proposed in the NPRM, the qualified small business safe harbor would provide that a qualified small business has met its readily achievable barrier removal obligations for a given year if, during that tax year, the entity has spent at least 1 percent of its gross revenue in the preceding tax year on measures undertaken to comply with title III barrier removal requirements. (Several small business advocacy organizations pointed out an inconsistency between the Department's description of the small business safe harbor in the Section-by-Section Analysis for §36.304 and the proposed regulatory text for that provision. The proposed regulatory text sets out the correct parameters of the proposed rule. The Department does not believe that the error substantively affected the comments on this issue. Some commenters noted the discrepancy and commented on both; others commented more generally on the proposal, so the discrepancy was not relevant.) The Department noted that the efficacy of any proposal for a small business safe harbor would turn on the following two determinations: (1) The definition of a qualified small business, and (2) the formula for calculating what percentage of revenue is sufficient to satisfy the readily achievable presumption.

As proposed in §36.104 in the NPRM, a ''qualified small business'' is a business entity defined as a small business concern under the regulations promulgated by the Small Business Administration (SBA) pursuant to the Small Business Act. *See* 15 U.S.C. 632; 13 CFR part 121. The Department noted that under section 3(a)(2)(C) of the Small Business Act, Federal departments and agencies are prohibited from prescribing a size standard for categorizing a business concern as a small business unless the department or agency has been authorized specifically to do so or has proposed a size standard in compliance with the criteria set forth in the SBA regulations, has provided an opportunity for public notice and comment on the proposed standard, and has received approval from the Administrator of the SBA to use the standard. *See* 15 U.S.C. 632(a)(2)(C). The Department further noted that Federal agencies or departments promulgating regulations relating to small businesses usually use SBA size criteria, and they otherwise must be prepared to justify how they arrived at a different standard and why the SBA's regulations do not satisfy the agency's program requirements. *See* 13 CFR 121.903. The ADA does not define ''small business'' or specifically authorize the Department to prescribe size standards.

In the NPRM, the Department indicated its belief that the size standards developed by the SBA are appropriate for determining which businesses subject to the ADA should be eligible for the small business safe harbor provisions, and proposed to adopt the SBA's size standards to define small businesses for purposes of the qualified small business safe harbor. The SBA's small business size standards define the maximum size that a concern, together with all of its affiliates, may be if it is to be eligible for Federal small business programs or to be considered a small business for the purpose of other Federal agency programs. Concerns primarily engaged in the same kind of economic activity are classified in the same industry regardless of their types of ownership (such as sole proprietorship, partnership, or corporation). Approximately 1200 industries are described in detail in the North American Industry Classification System—United States, 2007. For most businesses, the SBA has established a size standard based on average annual receipts. The majority of places of public accommodation will be classified as small businesses if their average annual receipts are less than $6.5 million. However, some will qualify with higher annual receipts. The SBA small business size standards should be familiar to many if not most small businesses, and using these standards in the ADA regulation would provide some certainty to owners, operators, and individuals because the SBA's current size standards can be changed only after notice and comment rulemaking.

The Department explained in the NPRM that the choice of gross revenue as the basis for calculating the safe harbor threshold was intended to avoid the effect of differences in bookkeeping practices and to maximize accessibility consistent with congressional intent. The Department recognized, however, that entities with similar gross revenue could have very different net revenue, and that this difference might affect what is readily achievable for a particular entity. The Department also recognized that adopting a small business safe harbor would effect a marked change to the Department's current position on barrier removal. Accordingly, the Department sought public comment on whether a presumption should be adopted whereby qualifying small businesses are presumed to have done what is readily achievable for a given year if, during that tax year, the entity spent at least 1 percent

of its gross revenue in the preceding tax year on barrier removal, and on whether 1 percent is an appropriate amount or whether gross revenue would be the appropriate measure.

The Department received many comments on the proposed qualified small business safe harbor. From the business community, comments were received from individual business owners and operators, industry and trade groups, and advocacy organizations for business and industry. From the disability community, comments were received from individuals, disability advocacy groups, and nonprofit organizations involved in providing services for persons with disabilities or involved in disability-related fields. The Department has considered all relevant matter submitted on this issue during the 60-day public comment period.

Small businesses and industry groups strongly supported a qualified small business safe harbor of some sort, but none supported the structure proposed by the Department in the NPRM. All felt strongly that clarifications and modifications were needed to strengthen the provision and to provide adequate protection from litigation.

Business commenters' objections to the proposed qualified small business safe harbor fell generally into three categories: (1) That gross revenue is an inappropriate and inaccurate basis for determining what is readily achievable by a small business since it does not take into account expenses that may result in a small business operating at a loss; (2) that courts will interpret the regulation to mean that a small business *must* spend 1 percent of gross revenue each year on barrier removal, *i.e.*, that expenditure of 1 percent of gross revenue on barrier removal is always ''readily achievable''; and (3) that a similar misinterpretation of the 1 percent gross revenue concept, *i.e.*, that 1 percent of gross revenue is always ''readily achievable,'' will be applied to public accommodations that are not small businesses and that have substantially larger gross revenue. Business groups also expressed significant concern about the recordkeeping burdens they viewed as inherent in the Department's proposal.

Across the board, business commenters objected to the Department's proposed use of gross revenue as the basis for calculating whether the small business safe harbor has been met. All contended that 1 percent of gross revenue is too substantial a trigger for safe harbor protection and would result in barrier removal burdens far exceeding what is readily achievable or ''easily accomplishable and able to be carried out without much difficulty or expense.'' 42 U.S.C. 12181(9). These commenters further pointed out that gross revenue and receipts vary considerably from industry to industry depending on the outputs sold in each industry, and that the use of gross revenue or receipts would therefore result in arbitrary and inequitable burdens on those subject to the rule. These commenters stated that the readily achievable analysis, and thus the safe harbor threshold, should be premised on a business's net revenue so that operating expenses are offset before determining what amount might be available for barrier removal. Many business commenters contended that barrier removal is not readily achievable if an entity is operating at a loss, and that a spending formula premised on net revenue can reflect more accurately businesses' ability to engage in barrier removal.

There was no consensus among the business commenters as to a formula that would reflect more accurately what is readily achievable for small businesses with respect to barrier removal. Those that proposed alternative formulas offered little in the way of substantive support for their proposals. One advocacy organization representing a large cross-section of small businesses provided some detail on the gross and net revenue of various industry types and sizes in support of its position that for nearly all small businesses, net revenue is a better indicator of a business's financial ability to spend money on barrier removal. The data also incidentally highlighted the importance and complexity of ensuring that each component in a safe harbor formula accurately informs and contributes to the ultimate question of what is and is not readily achievable for a small business.

Several business groups proposed that a threshold of 0.5 percent (or one-half of 1 percent) of gross revenue, or 2.5 percent of net revenue, spent on ADA compliance might be a workable measure of what is ''readily achievable'' for small businesses. Other groups proposed 3 to 5 percent of net revenue as a possible measure. Several commenters proposed affording small businesses an option of using gross or net revenue to determine safe harbor eligibility. Another commenter proposed premising the safe harbor threshold on a designated percentage of the amount spent on renovation in a given year. Others proposed averaging gross or net revenue over a number of years to account for cyclical changes in economic and business environments. Additionally, many proposed that an entity should be able to roll over expenditures in excess of the safe harbor for inclusion in safe harbor analysis in subsequent years, to facilitate barrier removal planning and encourage large-scale barrier removal measures.

Another primary concern of many businesses and business groups is that the 1 percent threshold for safe harbor protection would become a de facto ''floor'' for what is readily achievable for any small business entity. These commenters urged the Department to clarify that readily achievable barrier removal remains the standard, and that in any given case, an entity retains the right

to assert that barrier removal expenditures below the 1 percent threshold are not readily achievable. Other business groups worried that courts would apply the 1 percent calculus to questions of barrier removal by businesses too large to qualify for the small business safe harbor. These commenters requested clarification that the rationale underlying the Department's determination that a percentage of gross revenue can appropriately approximate readily achievable barrier removal for small businesses does not apply outside the small business context.

Small businesses and business groups uniformly requested guidance as to what expenses would be included in barrier removal costs for purposes of determining whether the safe harbor threshold has been met. These commenters contended that any and all expenses associated with ADA compliance—*e.g.*, consultants, architects, engineers, staff training, and recordkeeping—should be included in the calculation. Some proposed that litigation-related expenses, including defensive litigation costs, also should be accounted for in a small business safe harbor. Additionally, several commenters urged the Department to issue a small business compliance guide with detailed guidance and examples regarding application of the readily achievable barrier removal standard and the safe harbor. Some commenters felt that the Department's regulatory efforts should be focused on clarifying the readily achievable standard rather than on introducing a safe harbor based on a set spending level.

Businesses and business groups expressed concern that the Department's proposed small business safe harbor would not alleviate small business vulnerability to litigation. Individuals and advocacy groups were equally concerned that the practical effect of the Department's proposal likely would be to accelerate or advance the initiation of litigation. These commenters pointed out that an individual encountering barriers in small business facilities will not know whether the entity is noncompliant or entitled to safe harbor protection. Safe harbor eligibility can be evaluated only after review of the small business's barrier removal records *and* financial records. Individuals and advocacy groups argued that the Department should not promulgate a rule by which individuals must file suit to obtain the information needed to determine whether a lawsuit is appropriate in a particular case, and that, therefore, the rule should clarify that small businesses are required to produce such documentation to any individual upon request.

Several commenters noted that a small business safe harbor based on net, rather than gross, revenue would complicate exponentially its efficacy as an affirmative defense, because accounting practices and asserted expenses would be subject to discovery and dispute. One business advocacy group representing a large cross-section of small businesses noted that some small business owners and operators likely would be uncomfortable with producing detailed financial information, or could be prevented from using the safe harbor because of inadvertent recordkeeping deficiencies.

Individuals, advocacy groups, and nonprofit organizations commenting on behalf of the disability community uniformly and strongly opposed a safe harbor for qualified small businesses, saying it is fundamentally at odds with the intent of Congress and the plain language of the ADA. These commenters contended that the case-specific factors underlying the statute's readily achievable standard cannot be reconciled with a formulaic accounting approach, and that a blanket formula inherently is less fair, less flexible, and less effective than the current case-by-case determination for whether an action is readily achievable. Moreover, they argued, a small business safe harbor for readily achievable barrier removal is unnecessary because the statutory standard explicitly provides that a business need only spend what is readily achievable—an amount that may be more or less than 1 percent of revenue in any given year.

Several commenters opined that the formulaic approach proposed by the Department overlooks the factors that often prove most conducive and integral to readily achievable barrier removal—planning and prioritization. Many commenters expressed concern that the safe harbor creates an incentive for business entities to forego large-scale barrier removal in favor of smaller, less costly removal projects, regardless of the relative access the measures might provide. Others commented that an emphasis on a formulaic amount rather than readily achievable barrier removal might result in competition among types of disabilities as to which barriers get removed first, or discrimination against particular types of disabilities if barrier removal for those groups is more expensive.

Many commenters opposed to the small business safe harbor proposed clarifications and limiting rules. A substantial number of commenters were strongly opposed to what they perceived as a vastly overbroad and overly complicated definition of ''qualified small business'' for purposes of eligibility for the safe harbor, and urged the Department to limit the qualified small business safe harbor to those businesses eligible for the ADA small business tax credit under section 44 of the Tax Code. Some commenters from the disability community contended that the spending level that triggers the safe harbor should be cumulative, to reflect the continuing nature of the readily achievable barrier obligation and to preclude a business from erasing years of unjustifiable inaction

or insufficient action by spending up to the safe harbor threshold for one year. These commenters also sought explicit clarification that the small business safe harbor is an affirmative defense.

A number of commenters proposed that a business seeking to use the qualified small business safe harbor should be required to have a written barrier removal plan that contains a prioritized list of significant access barriers, a schedule for removal, and a description of the methods used to identify and prioritize barriers. These commenters argued that only spending consistent with the plan should count toward the qualified small business threshold.

After consideration of all relevant matter presented, the Department has concluded that neither the qualified small business safe harbor proposed in the NPRM nor any of the alternatives proposed by commenters will achieve the Department's intended results. Business and industry commenters uniformly objected to a safe harbor based on gross revenue, argued that 1 percent of gross revenue was out of reach for most, if not all, small businesses, and asserted that a safe harbor based on net revenue would better capture whether and to what extent barrier removal is readily achievable for small businesses. Individuals and disability advocacy groups rejected a set formula as fundamentally inconsistent with the case-specific approach reflected in the statute.

Commenters on both sides noted ambiguity as to which ADA-related costs appropriately should be included in the calculation of the safe harbor threshold, and expressed concern about the practical effect of the proposed safe harbor on litigation. Disability organizations expressed concern that the proposal might increase litigation because individuals with disabilities confronted with barriers in places of public accommodation would not be able to independently assess whether an entity is noncompliant or is, in fact, protected by the small business safe harbor. The Department notes that the concerns about enforcement-related complexity and expense likely would increase exponentially with a small business safe harbor based on net revenue.

The Department continues to believe that promulgation of a small business safe harbor would be within the scope of the Attorney General's mandate under 42 U.S.C. 12186(b) to issue regulations to carry out the provisions of title III. Title III defines ''readily achievable'' to mean ''easily accomplishable and able to be carried out without much difficulty or expense,'' 42 U.S.C. 12181(9), and sets out factors to consider in determining whether an action is readily achievable. While the statutory factors reflect that whether an action is readily achievable is a fact-based determination, there is no inherent inconsistency with the Department's proposition that a formula based on revenue and barrier removal expenditure could accurately approximate the high end of the level of expenditure that can be considered readily achievable for a circumscribed subset of title III entities defined, in part, by their maximum annual average receipts. Moreover, the Department's obligation under the SBREFA to consider alternative means of compliance for small businesses, *see* 5 U.S.C. 603(c), further supports the Department's conclusion that a well-targeted formula is a reasonable approach to implementation of the statute's readily achievable standard. While the Department ultimately has concluded that a small business safe harbor should not be included in the final rule, the Department continues to believe that it is within the Department's authority to develop and implement such a safe harbor.

As noted above, the business community strongly objected to a safe harbor premised on gross revenue, on the ground that gross revenue is an unreliable indicator of an entity's ability to remove barriers, and urged the Department to formulate a safe harbor based on net revenue. The Department's proposed use of gross revenue was intended to offer a measure of certainty for qualified small businesses while ensuring that those businesses continue to meet their ongoing obligation to remove architectural barriers where doing so is readily achievable.

The Department believes that a qualified small business safe harbor based on net revenue would be an unreliable indicator of what is readily achievable and would be unworkable in practice. Evaluation of what is readily achievable for a small business cannot rest solely on a business's net revenue because many decisions about expenses are inherently subjective, and in some cases a net loss may be more beneficial (in terms of taxes, for example) than a small net profit. The Department does not read the ADA's readily achievable standard to mean necessarily that architectural barrier removal is to be, or should be, a business's last concern, or that a business can claim that every barrier removal obligation is not readily achievable. Therefore, if a qualified small business safe harbor were to be premised on net revenue, assertion of the affirmative defense would trigger discovery and examination of the business's accounting methods and the validity or necessity of offsetting expenses. The practical benefits and legal certainty intended by the NPRM would be lost.

Because there was little to no support for the Department's proposed use of gross revenue and no workable alternatives are available at this time, the Department will not adopt a small business safe harbor in this final rule. Small business public accommodations are subject to the barrier removal requirements set out in §36.304 of the final rule. In addition, the Department plans to

provide small businesses with more detailed guidance on assessing and meeting their barrier removal obligations in a small business compliance guide.

Section 36.308 Seating in Assembly Areas

In the 1991 rule, §36.308 covered seating obligations for public accommodations in assembly areas. It was bifurcated into (a) existing facilities and (b) new construction and alterations. The new construction and alterations provision, §36.308(b), merely stated that assembly areas should be built or altered in accordance with the applicable provisions in the 1991 Standards. Section 36.308(a), by contrast, provided detailed guidelines on what barrier removal was required.

The Department explained in the preamble to the 1991 rule that §36.308 provided specific rules on assembly areas to ensure that wheelchair users, who typically were relegated to inferior seating in the back of assembly areas separate from their friends and family, would be provided access to seats that were integrated and equal in quality to those provided to the general public. Specific guidance on assembly areas was desirable because they are found in many different types of places of public accommodation, ranging from opera houses (places of exhibition or entertainment) to private university lecture halls (places of education), and include assembly areas that range in size from small movie theaters of 100 or fewer seats to 100,000-seat sports stadiums.

In the NPRM, the Department proposed to update §36.308(a) by incorporating some of the applicable assembly area provisions from the 2010 Standards. Upon further review, however, the Department has determined that the need to provide special guidance for assembly areas in a separate section no longer exists, except for specialty seating areas, as discussed below. Since enactment of the ADA, the Department has interpreted the 1991 Standards as a guide for determining the existence of barriers. Courts have affirmed this interpretation. *See, e.g., Colorado Cross Disability Coalition* v. *Too, Inc.*, 344 F. Supp. 2d 707 (D. Colo. 2004); *Access Now, Inc.* v. *AMH CGH, Inc.*, 2001 WL 1005593 (S.D. Fla. 2001); *Pascuiti* v. *New York Yankees*, 87 F. Supp. 2d 221 (S.D.N.Y. 1999). The 2010 Standards now establish detailed guidance for newly constructed and altered assembly areas, which is provided in §36.406(f), and these Standards will serve as a new guide for barrier removal. Accordingly, the former §36.308(a) has been replaced in the final rule. Assembly areas will benefit from the same safe harbor provisions applicable to barrier removal in all places of public accommodations as provided in §36.304(d)(2) of the final rule.

The Department has also decided to remove proposed §36.308(c)(2) from the final rule. This provision would have required assembly areas with more than 5,000 seats to provide five wheelchair spaces with at least three designated companion seats for each of those five wheelchair spaces. The Department agrees with commenters who asserted that group seating already is addressed more appropriately in ticketing under §36.302(f).

The Department has determined that proposed §36.308(c)(1), addressing specialty seating in assembly areas, should remain as §36.308 in the final rule with additional language. This paragraph is designed to ensure that individuals with disabilities have an opportunity to access specialty seating areas that entitle spectators to distinct services or amenities not generally available to others. This provision is not, as several commenters mistakenly thought, designed to cover luxury boxes and suites. Those areas have separate requirements outlined in section 221 of the 2010 Standards.

Section 36.308 requires only that accessible seating be provided in each area with *distinct* services or amenities. To the extent a covered entity provides multiple seating areas with the same services and amenities, each of those areas would not be distinct and thus all of them would not be required to be accessible. For example, if a facility has similar dining service in two areas, both areas would not need to be made accessible; however, if one dining service area is open to families, while the other is open only to individuals over the age of 21, both areas would need to be made accessible. Factors distinguishing specialty seating areas generally are dictated by the type of facility or event, but may include, for example, such distinct services and amenities as access to wait staff for in-seat food or beverage service; availability of catered food or beverages for pregame, intermission, or post-game events; restricted access to lounges with special amenities, such as couches or flat-screen televisions; or access to team personnel or facilities for team-sponsored events (*e.g.*, autograph sessions, sideline passes, or facility tours) not otherwise available to other spectators.

The NPRM required public accommodations to locate wheelchair seating spaces and companion seats in each specialty seating area within the assembly area. The Department has added language in the final rule stating that public accommodations that cannot place wheelchair seating spaces and companion seats in each specialty area because it is not readily achievable to do so may meet their obligation by providing specialty services or amenities to individuals with disabilities and their companions at other designated accessible locations at no additional cost. For example, if a theater that only has barrier removal obligations provides wait service to spectators in the mezzanine, and it is not readily achievable

to place accessible seating there, it may meet its obligation by providing wait service to patrons with disabilities who use wheelchairs and their companions at other designated accessible locations at no additional cost. This provision does not obviate the obligation to comply with applicable requirements for new construction and alterations, including dispersion of accessible seating.

Section 36.309 Examinations and Courses

Section 36.309(a) sets forth the general rule that any private entity that offers examinations or courses relating to applications, licensing, certification, or credentialing for secondary or postsecondary education, professional, or trade purposes shall offer such examinations or courses in a place and manner accessible to persons with disabilities or offer alternative accessible arrangements for such individuals. In the NPRM preamble and proposed regulatory amendment and in this final rule, the Department relied on its history of enforcement efforts, research, and body of knowledge of testing and modifications, accommodations, and aids in detailing steps testing entities should take to ensure that persons with disabilities receive appropriate modifications, accommodations, or auxiliary aids in examination and course settings as required by the ADA. The Department received comments from disability rights groups, organizations that administer tests, State governments, professional associations, and individuals on the language appearing in the NPRM preamble and amended regulation and has carefully considered these comments.

The Department initially set out the parameters of appropriate documentation requests relating to examinations and courses covered by this section in the 1991 preamble at 28 CFR part 36, stating that ''requests for documentation must be reasonable and must be limited to the need for the modification or aid requested.'' *See* 28 CFR part 36, app. B at 735 (2009). Since that time, the Department, through its enforcement efforts pursuant to section 309, has addressed concerns that requests by testing entities for documentation regarding the existence of an individual's disability and need for a modification or auxiliary aid or service were often inappropriate and burdensome. The Department proposed language stating that while it may be appropriate for a testing entity to request that an applicant provide documentation supporting the existence of a disability and the need for a modification, accommodation, or auxiliary aid or service, the request by the testing entity for such documentation must be reasonable and limited. The NPRM proposed that testing entities should narrowly tailor requests for documentation, limiting those requests to materials that will allow the testing entities to ascertain the nature of the disability and the individual's need for the requested modification, accommodation, or auxiliary aid or service. This proposal codified the 1991 rule's preamble language regarding testing entities' requests for information supporting applicants' requests for testing modifications or accommodations.

Overall, most commenters supported this addition to the regulation. These commenters generally agreed that documentation sought by testing entities to support requests for modifications and testing accommodations should be reasonable and tailored. Commenters noted, for example, that the proposal to require reasonable and tailored documentation requests ''is not objectionable. Indeed, it largely tracks DOJ's longstanding informal guidance that 'requests for documentation must be reasonable and limited to the need for the modification or aid requested.' ''

Commenters including disability rights groups, State governments, professional associations, and individuals made it clear that, in addition to the proposed regulatory change, other significant problems remain for individuals with disabilities who seek necessary modifications to examinations and courses. These problems include detailed questions about the nature of documentation materials submitted by candidates, testing entities' questioning of documentation provided by qualified professionals with expertise in the particular disability at issue, and lack of timeliness in determining whether to provide requested accommodations or modifications. Several commenters expressed enthusiasm for the preamble language addressing some of these issues, and some of these commenters recommended the incorporation of portions of this preamble language into the regulatory text. Some testing entities expressed concerns and uncertainty about the language in the preamble and sought clarifications about its meaning. These commenters focused most of their attention on the following language from the NPRM preamble:

> Generally, a testing entity should accept without further inquiry documentation provided by a qualified professional who has made an individualized assessment of the applicant. Appropriate documentation may include a letter from a qualified professional or evidence of a prior diagnosis, or accommodation, or classification, such as eligibility for a special education program. When an applicant's documentation is recent and demonstrates a consistent history of a diagnosis, there is no need for further inquiry into the nature of the disability. A testing entity should consider an applicant's past use of a particular auxiliary aid or service.

73 FR 34508, 34539 (June 17, 2008).

Professional organizations, State governments, individuals, and disability rights groups fully supported the Department's preamble language and recommended further modification of the regulations to encompass the issues raised in the preamble. A disability rights group recommended that the Department incorporate the preamble language into the regulations to ensure that ''documentation demands are strictly limited in scope and met per se when documentation of previously provided accommodations or aids is provided.'' One professional education organization noted that many testing corporations disregard the documented diagnoses of qualified professionals, and instead substitute their own, often unqualified diagnoses of individuals with disabilities. Commenters confirmed that testing entities sometimes ask for unreasonable information that is either impossible, or extremely onerous, to provide. A disability rights organization supported the Department's proposals and noted that private testing companies impose burdensome documentation requirements upon applicants with disabilities seeking accommodations and that complying with the documentation requests is frequently so difficult, and negotiations over the requests so prolonged, that test applicants ultimately forgo taking the test. Another disability rights group urged the Department to ''expand the final regulatory language to ensure that regulations accurately provide guidance and support the comments made about reducing the burden of documenting the diagnosis and existence of a disability.''

Testing entities, although generally supportive of the proposed regulatory amendment, expressed concern regarding the Department's proposed preamble language. The testing entities provided the Department with lengthy comments in which they suggested that the Department's rationale delineated in the preamble potentially could limit them from gathering meaningful and necessary documentation to determine whether, in any given circumstance, a disability is presented, whether modifications are warranted, and which modifications would be most appropriate. Some testing entities raised concerns about individuals skewing testing results by falsely claiming or feigning disabilities as an improper means of seeking advantage on an examination. Several testing entities raised concerns about and sought clarification regarding the Department's use of certain terms and concepts in the preamble, including ''without further inquiry,'' ''appropriate documentation,'' ''qualified professional,'' ''individualized assessment,'' and ''consider.'' These entities discussed the preamble language at length, noting that testing entities need to be able to question some aspects of testing applicants' documentation or to request further documentation from some candidates when the initial documentation is unclear or incomplete. One testing entity expressed concern that the Department's preamble language would require the acceptance of a brief note on a doctor's prescription pad as adequate documentation of a disability and the need for an accommodation. One medical examination organization stated that the Department's preamble language would result in persons without disabilities receiving accommodations and passing examinations as part of a broad expansion of unwarranted accommodations, potentially endangering the health and welfare of the general public. Another medical board ''strenuously objected'' to the ''without further inquiry'' language. Several of the testing entities expressed concern that the Department's preamble language might require testing companies to accept documentation from persons with temporary or questionable disabilities, making test scores less reliable, harming persons with legitimate entitlements, and resulting in additional expense for testing companies to accommodate more test takers.

It remains the Department's view that, when testing entities receive documentation provided by a qualified professional who has made an individualized assessment of an applicant that supports the need for the modification, accommodation, or aid requested, they shall generally accept such documentation and provide the accommodation.

Several commenters sought clarifications on what types of documentation are acceptable to demonstrate the existence of a disability and the need for a requested modification, accommodation, or aid. The Department believes that appropriate documentation may vary depending on the nature of the disability and the specific modification or aid requested, and accordingly, testing entities should consider a variety of types of information submitted. Examples of types of information to consider include recommendations of qualified professionals familiar with the individual, results of psychoeducational or other professional evaluations, an applicant's history of diagnosis, participation in a special education program, observations by educators, or the applicant's past use of testing accommodations. If an applicant has been granted accommodations post-high school by a standardized testing agency, there is no need for reassessment for a subsequent examination.

Some commenters expressed concern regarding the use of the term ''letter'' in the proposed preamble sentence regarding appropriate documentation. The NPRM preamble language stated that ''[a]ppropriate documentation may include a letter from a qualified professional or evidence of a prior diagnosis, accommodation, or classification, such as eligibility for a special education program.'' 73 FR 34508, 34539 (June 17, 2008).

Some testing entities posited that the preamble language would require them to accept a brief letter from a doctor or even a doctor's note on a prescription pad indicating ''I've been treating (student) for ADHD and he/she is entitled to extend time on the ACT.'' The Department's reference in the NPRM preamble to letters from physicians or other professionals was provided in order to offer examples of some types of acceptable documentation that may be considered by testing entities in evaluating the existence of an applicant's disability and the need for a certain modification, accommodation, or aid. No one piece of evidence may be dispositive in make a testing accommodation determination. The significance of a letter or other communication from a doctor or other qualified professional would depend on the professional's relationship with the candidate and the specific content of the communication, as well as how the letter fits in with the totality of the other factors used to determine testing accommodations under this rule. Similarly, an applicant's failure to provide results from a specific test or evaluation instrument should not of itself preclude approval of requests for modifications, accommodations, or aids if the documentation provided by the applicant, in its entirety, is sufficient to demonstrate that the individual has a disability and requires a requested modification, accommodation, or aid on the relevant examination. This issue is discussed in more detail below.

One disability rights organization noted that requiring a 25-year old who was diagnosed in junior high school with a learning disability and accommodated ever since ''to produce elementary school report cards to demonstrate symptomology before the age of seven is unduly burdensome.'' The same organization commented that requiring an individual with a long and early history of disability to be assessed within three years of taking the test in question is similarly burdensome, stating that ''[t]here is no scientific evidence that learning disabilities abate with time, nor that Attention Deficits abate with time * * *.'' This organization noted that there is no justification for repeatedly subjecting people to expensive testing regimens simply to satisfy a disbelieving industry. This is particularly true for adults with, for example, learning disabilities such as dyslexia, a persistent condition without the need for retesting once the diagnosis has been established and accepted by a standardized testing agency.

Some commenters from testing entities sought clarification regarding who may be considered a ''qualified professional.'' Qualified professionals are licensed or otherwise properly credentialed and possess expertise in the disability for which modifications or accommodations are sought. For example, a podiatrist would not be considered to be a qualified professional to diagnose a learning disability or support a request for testing accommodations on that basis. Types of professionals who might possess the appropriate credentials and expertise are doctors (including psychiatrists), psychologists, nurses, physical therapists, occupational therapists, speech therapists, vocational rehabilitation specialists, school counselors, and licensed mental health professionals. Additionally, while testing applicants should present documentation from qualified professionals with expertise in the pertinent field, it also is critical that testing entities that review documentation submitted by prospective examinees in support of requests for testing modifications or accommodations ensure that their own reviews are conducted by qualified professionals with similarly relevant expertise.

Commenters also sought clarification of the term individualized assessment. The Department's intention in using this term is to ensure that documentation provided on behalf of a testing candidate is not only provided by a qualified professional, but also reflects that the qualified professional has individually and personally evaluated the candidate as opposed to simply considering scores from a review of documents. This is particularly important in the learning disabilities context, where proper diagnosis requires face-to-face evaluation. Reports from experts who have personal familiarity with the candidate should take precedence over those from, for example, reviewers for testing agencies, who have never personally met the candidate or conducted the requisite assessments for diagnosis and treatment.

Some testing entities objected to the NPRM preamble's use of the phrase ''without further inquiry.'' The Department's intention here is to address the extent to which testing entities should accept documentation provided by an applicant when the testing entity is determining the need for modifications, accommodations, or auxiliary aids or services. The Department's view is that applicants who submit appropriate documentation, *e.g.*, documentation that is based on the careful individual consideration of the candidate by a professional with expertise relating to the disability in question, should not be subjected to unreasonably burdensome requests for additional documentation. While some testing commenters objected to this standard, it reflects the Department's longstanding position. When an applicant's documentation demonstrates a consistent history of a diagnosis of a disability, and is prepared by a qualified professional who has made an individualized evaluation of the applicant, there is little need for further inquiry into the nature of the disability and generally testing entities should grant the requested modification, accommodation, or aid.

After a careful review of the comments, the Department has decided to maintain the proposed regulatory language on the scope of appropriate documentation in §36.309(b)(1)(iv). The Department has also added new regulatory language at §36.309(b)(1)(v) that provides that testing entities shall give considerable weight to documentation of past modifications, accommodations, or auxiliary aids or services received in similar testing situations as well as such modifications, accommodations, or related aids and services provided in response to an Individualized Education Program (IEP) provided under the Individuals with Disabilities Education Act (IDEA) or a plan providing services pursuant to section 504 of the Rehabilitation Act of 1973, as amended (often referred to as a Section 504 Plan). These additions to the regulation are necessary because the Department's position on the bounds of appropriate documentation contained in appendix B, 28 CFR part 36, app. B (2009), has not been implemented consistently and fully by organizations that administer tests.

The new regulatory language clarifies that an applicant's past use of a particular modification, accommodation, or auxiliary aid or service in a similar testing setting or pursuant to an IEP or Section 504 Plan provides critical information in determining those examination modifications that would be applicable in a given circumstance. The addition of this language and the appropriate weight to be accorded it is seen as important by the Department because the types of accommodations provided in both these circumstances are typically granted in the context of individual consideration of a student's needs by a team of qualified and experienced professionals. Even though these accommodations decisions form a common sense and logical basis for testing entities to rely upon, they are often discounted and ignored by testing entities.

For example, considerable weight is warranted when a student with a Section 504 Plan in place since middle school that includes the accommodations of extra time and a quiet room for testing is seeking these same accommodations from a testing entity covered by section 309 of the Act. In this example, a testing entity receiving such documentation should clearly grant the request for accommodations. A history of test accommodations in secondary schools or in post-secondary institutions, particularly when determined through the rigors of a process required and detailed by Federal law, is as useful and instructive for determining whether a specific accommodation is required as accommodations provided in standardized testing situations.

It is important to note, however, that the inclusion of this weight does not suggest that individuals without IEPs or Section 504 Plans are not also entitled to receive testing accommodations. Indeed, it is recommended that testing entities must consider the entirety of an applicant's history to determine whether that history, even without the context of a IEP or Section 504 Plan, indicates a need for accommodations. In addition, many students with learning disabilities have made use of informal, but effective accommodations. For example, such students often receive undocumented accommodations such as time to complete tests after school or at lunchtime, or being graded on content and not form or spelling of written work. Finally, testing entities shall also consider that because private schools are not subject to the IDEA, students at private schools may have a history of receiving accommodations in similar settings that are not pursuant to an IEP or Section 504 Plan.

Some testing entities sought clarification that they should only be required to consider particular use of past modifications, accommodations, auxiliary aids or services received by testing candidates for prior testing and examination settings. These commenters noted that it would be unhelpful to consider the classroom accommodations for a testing candidate, as those accommodations would not typically apply in a standardized test setting. The Department's history of enforcement in this area has demonstrated that a recent history of past accommodations is critical to an understanding of the applicant's disability and the appropriateness of testing accommodations.

The Department also incorporates the NPRM preamble's ''timely manner'' concept into the new regulatory language at §36.309(b)(1)(vi). Under this provision, testing entities are required to respond in a timely manner to requests for testing accommodations in order to ensure equal opportunity for persons with disabilities. Testing entities are to ensure that their established process for securing testing accommodations provides applicants with a reasonable opportunity to supplement the testing entities' requests for additional information, if necessary, and still be able to take the test in the same testing cycle. A disability rights organization commented that testing entities should not subject applicants to unreasonable and intrusive requests for information in a process that should provide persons with disabilities effective modifications in a timely manner, fulfilling the core objective of title III to provide equal access. Echoing this perspective, several disability rights organizations and a State government commenter urged that testing entities should not make unreasonably burdensome demands for documentation, particularly where those demands create impediments to receiving accommodations in a timely manner. Access to examinations should be offered to persons with disabilities in as timely a manner as it

is offered to persons without disabilities. Failure by a testing entity to act in a timely manner, coupled with seeking unnecessary documentation, could result in such an extended delay that it constitutes a denial of equal opportunity or equal treatment in an examination setting for persons with disabilities.

Section 36.311 Mobility Devices

Section 36.311 of the NPRM clarified the scope and circumstances under which covered entities are legally obligated to accommodate various ''mobility devices.'' Section 36.311 set forth specific requirements for the accommodation of mobility devices, including wheelchairs, manually-powered mobility aids, and other power-driven mobility devices.

In both the NPRM and the final rule, §36.311(a) states the general rule that in any areas open to pedestrians, public accommodations shall permit individuals with mobility disabilities to use wheelchairs and manually-powered mobility aids, including walkers, crutches, canes, braces, or similar devices. Because mobility scooters satisfy the definition of ''wheelchair'' (*i.e.*, ''a manually-operated or power-driven device designed primarily for use by an individual with a mobility disability for the main purpose of indoor, or of both indoor and outdoor locomotion''), the reference to them in §36.311(a) of the final rule has been omitted to avoid redundancy.

Most business commenters expressed concern that permitting the use of other power-driven mobility devices by individuals with mobility disabilities would make such devices akin to wheelchairs and would require them to make physical changes to their facilities to accommodate their use. This concern is misplaced. If a facility complies with the applicable design requirements in the 1991 Standards or the 2010 Standards, the public accommodation will not be required to exceed those standards to accommodate the use of wheelchairs or other power-driven mobility devices that exceed those requirements.

Legal standard for other power-driven mobility devices. The NPRM version of §36.311(b) provided that a public accommodation ''shall make reasonable modifications in its policies, practices, and procedures to permit the use of other power-driven mobility devices by individuals with disabilities, unless the public accommodation can demonstrate that the use of the device is not reasonable or that its use will result in a fundamental alteration in the nature of the public accommodation's goods, services, facilities, privileges, advantages, or accommodations.'' 73 FR 34508, 34556 (June 17, 2008). In other words, public accommodations are by default required to permit the use of other power-driven mobility devices; the burden is on them to prove the existence of a valid exception.

Most commenters supported the notion of assessing whether the use of a particular device is reasonable in the context of a particular venue. Commenters, however, disagreed about the meaning of the word ''reasonable'' as it is used in §36.311(b) of the NPRM. Virtually every business and industry commenter took the use of the word ''reasonable'' to mean that a general reasonableness standard would be applied in making such an assessment. Advocacy and nonprofit groups almost universally objected to the use of a general reasonableness standard with regard to the assessment of whether a particular device should be allowed at a particular venue. They argued that the assessment should be based on whether reasonable modifications could be made to allow a particular device at a particular venue, and that the only factors that should be part of the calculus that results in the exclusion of a particular device are undue burden, direct threat, and fundamental alteration.

A few commenters opposed the proposed provision requiring public accommodations to assess whether reasonable modifications can be made to allow other power-driven mobility devices, preferring instead that the Department issue guidance materials so that public accommodations would not have to incur the cost of such analyses. Another commenter noted a ''fox guarding the hen house''-type of concern with regard to public accommodations developing and enforcing their own modification policy.

In response to comments received, the Department has revised §36.311(b) to provide greater clarity regarding the development of legitimate safety requirements regarding other power-driven mobility devices. The Department has not retained the proposed NPRM language stating that an other power-driven mobility device can be excluded if a public accommodation can demonstrate that the use of the device is not reasonable or that its use fundamentally alters the nature of the goods, services, facilities, privileges, advantages, or accommodations offered by the public accommodation because the Department believes that these exceptions are covered by the general reasonable modification requirement contained in §36.302.

Assessment factors. Section 36.311(c) of the NPRM required public accommodations to ''establish policies to permit the use of other power-driven mobility devices'' and articulated four factors upon which public accommodations must base decisions as to whether a modification is reasonable to allow the use of a class of other power-driven mobility devices by individuals with disabilities in specific venues (*e.g.*, doctors' offices, parks, commercial buildings, etc.). 73 FR 34508, 34556 (June 17, 2008).

The Department has relocated and modified the NPRM text that appeared in §36.311(c) to new paragraph §36.311(b)(2) to clarify what factors the public accommodation shall use in determining whether a particular other power-driven mobility device can be allowed in a specific facility as a reasonable modification. Section 36.311(b)(2) now states that ''[i]n determining whether a particular other power-driven mobility device can be allowed in a specific facility as a reasonable modification under (b)(1), a public accommodation shall consider'' certain enumerated factors. The assessment factors are designed to assist public accommodations in determining whether allowing the use of a particular other power-driven mobility device in a specific facility is reasonable. Thus, the focus of the analysis must be on the appropriateness of the use of the device at a specific facility, rather than whether it is necessary for an individual to use a particular device.

The NPRM proposed the following specific assessment factors: (1) The dimensions, weight, and operating speed of the mobility device in relation to a wheelchair; (2) the potential risk of harm to others by the operation of the mobility device; (3) the risk of harm to the environment or natural or cultural resources or conflict with Federal land management laws and regulations; and (4) the ability of the public accommodation to stow the mobility device when not in use, if requested by the user.

Factor 1 was designed to help public accommodations assess whether a particular device was appropriate, given its particular physical features, for a particular location. Virtually all commenters said the physical features of the device affected their view of whether a particular device was appropriate for a particular location. For example, while many commenters supported the use of an other power-driven mobility device if the device were a Segway® PT, because of environmental and health concerns they did not offer the same level of support if the device were an off-highway vehicle, all-terrain vehicle (ATV), golf car, or other device with a fuel-powered or combustion engine. Most commenters noted that indicators such as speed, weight, and dimension really were an assessment of the appropriateness of a particular device in specific venues and suggested that factor 1 say this more specifically.

The term ''in relation to a wheelchair'' in the NPRM's factor 1 apparently created some concern that the same legal standards that apply to wheelchairs would be applied to other power-driven mobility devices. The Department has omitted the term ''in relation to a wheelchair'' from §36.311(b)(2)(i) to clarify that if a facility that is in compliance with the applicable provisions of the 1991 Standards or the 2010 Standards grants permission for an other power-driven mobility device to go on-site, it is not required to exceed those standards to accommodate the use of other power-driven mobility devices.

In response to requests that NPRM factor 1 state more specifically that it requires an assessment of an other power-driven mobility device's appropriateness under particular circumstances or in particular venues, the Department has added several factors and more specific language. In addition, although the NPRM made reference to the operation of other power-driven mobility devices in ''specific venues,'' the Department's intent is captured more clearly by referencing ''specific facility'' in paragraph (b)(2). The Department also notes that while speed is included in factor 1, public accommodations should not rely solely on a device's top speed when assessing whether the device can be accommodated; instead, public accommodations should also consider the minimum speeds at which a device can be operated and whether the development of speed limit policies can be established to address concerns regarding the speed of the device. Finally, since the ability of the public accommodation to stow the mobility device when not in use is an aspect of its design and operational characteristics, the text proposed as factor 4 in the NPRM has been incorporated in paragraph (b)(2)(iii).

The NPRM's version of factor 2 provided that the ''potential risk of harm to others by the operation of the mobility device'' is one of the determinants in the assessment of whether other power-driven mobility devices should be excluded from a site. With this language, the Department intended to incorporate the safety standard found in §36.301(b), which provides that public accommodations may ''impose legitimate safety requirements that are necessary for safe operation'' into the assessment. However, several commenters indicated that they read this language, particularly the phrase ''potential risk of harm'' to mean that the Department had adopted a concept of risk analysis different from that which is in the existing standards. The Department did not intend to create a new standard and has changed the language in paragraphs (b)(1) and (b)(2) to clarify the applicable standards, thereby avoiding the introduction of new assessments of risk beyond those necessary for the safe operation of the public accommodation.

While all applicable affirmative defenses are available to public accommodations in the establishment and execution of their policies regarding other power-driven mobility devices, the Department did not explicitly incorporate the direct threat defense into the assessment factors because §36.301(b) provides public accommodations the appropriate framework with which to assess whether legitimate safety requirements

that may preclude the use of certain other power-driven mobility devices are necessary for the safe operation of the public accommodation. In order to be legitimate, the safety requirement must be based on actual risks and not mere speculation regarding the device or how it will be operated. Of course, public accommodations may enforce legitimate safety rules established for the operation of other-power driven mobility devices (*e.g.*, reasonable speed restrictions). Finally, NPRM factor 3 concerning environmental resources and conflicts of law has been relocated to paragraph (b)(2)(v).

As a result of these comments and requests, NPRM factors 1, 2, 3, and 4 have been revised and renumbered within paragraph 36.311(b)(2) in the final rule.

Several commenters requested that the Department provide guidance materials or more explicit concepts of which considerations might be appropriate for inclusion in a policy that allows the use of other power-driven mobility devices. A public accommodation that has determined that reasonable modifications can be made in its policies, practices, or procedures to allow the use of other power-driven mobility devices should develop a policy that clearly states the circumstances under which the use of other power-driven mobility devices by individuals with a mobility disability will be permitted. It also should include clear, concise statements of specific rules governing the operation of such devices. Finally, the public accommodation should endeavor to provide individuals with disabilities who use other power-driven mobility devices with advanced notice of its policy regarding the use of such devices and what rules apply to the operation of these devices.

For example, the U.S. General Services Administration (GSA) has developed a policy allowing the use of the Segway® PT and other EPAMDs in all Federal buildings under GSA's jurisdiction. *See* General Services Administration, *Interim Segway® Personal Transporter Policy* (Dec. 3, 2007), available at *http://www.gsa.gov/graphics/pbs/Interim_Segway_Policy_121007.pdf* (last visited June 24, 2010). The GSA policy defines the policy's scope of coverage by setting out what devices are and are not covered by the policy. The policy also sets out requirements for safe operation, such as a speed limit, prohibits the use of EPAMDs on escalators, and provides guidance regarding security screening of these devices and their operators.

A public accommodation that determines that it can make reasonable modifications to permit the use of an other power-driven mobility device by an individual with a mobility disability might include in its policy the procedure by which claims that the other power-driven mobility device is being used for a mobility disability will be assessed for legitimacy (*i.e.*, a credible assurance that the device is being used for a mobility disability, including a verbal representation by the person with a disability that is not contradicted by observable fact, or the presentation of a disability parking space placard or card, or State-issued proof of disability); the type or classes of other power-driven mobility devices are permitted to be used by individuals with mobility disabilities; the size, weight, and dimensions of the other power-driven mobility devices that are permitted to be used by individuals with mobility disabilities; the speed limit for the other power-driven mobility devices that are permitted to be used by individuals with mobility disabilities; the places, times, or circumstances under which the use of the other power-driven mobility devices is or will be restricted or prohibited; safety, pedestrian, and other rules concerning the use of the other power-driven mobility devices; whether, and under which circumstances, storage for the other power-driven mobility devices will be made available; and how and where individuals with a mobility disability can obtain a copy of the other power-driven mobility device policy.

Public accommodations also might consider grouping other power-driven mobility devices by type (*e.g.*, EPAMDs, golf cars, gasoline-powered vehicles, and other devices). For example, an amusement park may determine that it is reasonable to allow individuals with disabilities to use EPAMDs in a variety of outdoor programs and activities, but that it would not be reasonable to allow the use of golf cars as mobility devices in similar circumstances. At the same time, the entity may address its concerns about factors such as space limitations by disallowing use of EPAMDs by members of the general public who do not have mobility disabilities.

The Department anticipates that in many circumstances, public accommodations will be able to develop policies that will allow the use of other power-driven mobility devices by individuals with mobility disabilities without resulting in a fundamental alteration of a public accommodation's goods, services, facilities, privileges, advantages, or accommodations. Consider the following examples:

Example 1: Although individuals who do not have mobility disabilities are prohibited from operating EPAMDs at a theme park, the park has developed a policy allowing individuals with mobility disabilities to use EPAMDs as their mobility device at the park. The policy states that EPAMDs are allowed in all areas of the theme park that are open to pedestrians as a reasonable modification to its general policy on EPAMDs. The public accommodation has determined that the facility provides adequate space for a taller device, such as an EPAMD, and that it does not fundamentally alter the nature of

the theme park's goods and services. The theme park's policies do, however, require that EPAMDs be operated at a safe speed limit. A theme park employee may inquire at the ticket gate whether the device is needed due to the user's disability or may request the presentation of a valid, State-issued, disability parking placard (though presentation of such a placard is not necessary), or other State-issued proof of disability or a credible assurance that the use of the EPAMD is for the individual's mobility disability. The park employee also may inform an individual with a disability using an EPAMD that the theme park's policy requires that it be operated at or below the park's designated speed limit.

Example 2: A shopping mall has developed a policy whereby EPAMDs may be operated by individuals with mobility disabilities in the common pedestrian areas of the mall if the operator of the device agrees to the following: to operate the device no faster than the speed limit set by the policy; to use the elevator, not the escalator, to transport the EPAMD to different levels; to yield to pedestrian traffic; not to leave the device unattended unless it can stand upright and has a locking system; to refrain from using the device temporarily if the mall manager determines that the volume of pedestrian traffic is such that the operation of the device would interfere with legitimate safety requirements; and to present the mall management office with a valid, State-issued, disability parking placard (though presentation of such a placard is not necessary), or State-issued proof of disability, as a credible assurance that the use of the EPAMD is for the individual's mobility disability, upon entry to the mall.

Inquiry into the use of other power-driven mobility device. Section 36.311(d) of the NPRM provided that a ''public accommodation may ask a person using a power-driven mobility device if the mobility device is required because of the person's disability. A public accommodation shall not ask a person using a mobility device questions about the nature and extent of the person's disability.'' 73 FR 34508, 34556 (June 17, 2008).

While business commenters did not take issue with applying this standard to individuals who use wheelchairs, they were not satisfied with the application of this standard to other power-driven mobility devices. Business commenters expressed concern about people feigning mobility disabilities to be able to use other power-driven mobility devices in public accommodations in which their use is otherwise restricted. These commenters felt that a mere inquiry into whether the device is being used for a mobility disability was an insufficient mechanism by which to detect fraud by other power-driven mobility device users who do not have mobility disabilities. These commenters believed they should be given more latitude to make inquiries of other power-driven mobility device users claiming a mobility disability than they would be given for wheelchair users. They sought the ability to establish a policy or method by which public accommodations may assess the legitimacy of the mobility disability. They suggested some form of certification, sticker, or other designation. One commenter suggested a requirement that a sticker bearing the international symbol for accessibility be placed on the device or that some other identification be required to signal that the use of the device is for a mobility disability. Other suggestions included displaying a disability parking placard on the device or issuing EPAMDs, like the Segway® PT, a permit that would be similar to permits associated with parking spaces reserved for those with disabilities.

Advocacy, nonprofit, and several individual commenters balked at the notion of allowing any inquiry beyond whether the device is necessary for a mobility disability and encouraged the Department to retain the NPRM's language on this topic. Other commenters, however, were empathetic with commenters who had concerns about fraud. At least one Segway® PT advocate suggested it would be permissible to seek documentation of the mobility disability in the form of a simple sign or permit.

The Department has sought to find common ground by balancing the needs of businesses and individuals with mobility disabilities wishing to use other power-driven mobility devices with the Department's longstanding, well-established policy of not allowing public accommodations or establishments to require proof of a mobility disability. There is no question that public accommodations have a legitimate interest in ferreting out fraudulent representations of mobility disabilities, especially given the recreational use of other power-driven mobility devices and the potential safety concerns created by having too many such devices in a specific facility at one time. However, the privacy of individuals with mobility disabilities and respect for those individuals are also vitally important.

Neither §36.311(d) of the NPRM nor §36.311(c) of the final rule permits inquiries into the nature of a person's mobility disability. However, the Department does not believe it is unreasonable or overly intrusive for an individual with a mobility disability seeking to use an other power-driven mobility device to provide a credible assurance to verify that the use of the other power-driven mobility device is for a mobility disability. The Department sought to minimize the amount of discretion and subjectivity exercised by public accommodations in assessing

whether an individual has a mobility disability and to allow public accommodations to verify the existence of a mobility disability. The solution was derived from comments made by several individuals who said they have been admitted with their Segway® PTs into public entities and public accommodations that ordinarily do not allow these devices on-site when they have presented or displayed State-issued disability parking placards. In the examples provided by commenters, the parking placards were accepted as verification that the Segway® PTs were being used as mobility devices.

Because many individuals with mobility disabilities avail themselves of State programs that issue disability parking placards or cards and because these programs have penalties for fraudulent representations of identity and disability, utilizing the parking placard system as a means to establish the existence of a mobility disability strikes a balance between the need for privacy of the individual and fraud protection for the public accommodation. Consequently, the Department has decided to include regulatory text in §36.311(c)(2) of the final rule that requires public accommodations to accept the presentation of a valid, State-issued disability parking placard or card, or State-issued proof of disability, as verification that an individual uses the other power-driven mobility device for his or her mobility disability. A ''valid'' disability placard or card is one that is presented by the individual to whom it was issued and is otherwise in compliance with the State of issuance's requirements for disability placards or cards. Public accommodations are required to accept a valid, State-issued disability parking placard or card, or State-issued proof of disability, as a credible assurance, but they cannot demand or require the presentation of a valid disability placard or card, or State-issued proof of disability, as a prerequisite for use of an other power-driven mobility device, because not all persons with mobility disabilities have such means of proof. If an individual with a mobility disability does not have such a placard or card, or State-issued proof of disability, he or she may present other information that would serve as a credible assurance of the existence of a mobility disability.

In lieu of a valid, State-issued disability parking placard or card, or State-issued proof of disability, a verbal representation, not contradicted by observable fact, shall be accepted as a credible assurance that the other power-driven mobility device is being used because of a mobility disability. This does not mean, however, that a mobility disability must be observable as a condition for allowing the use of an other power-driven mobility device by an individual with a mobility disability, but rather that if an individual represents that a device is being used for a mobility disability and that individual is observed thereafter engaging in a physical activity that is contrary to the nature of the represented disability, the assurance given is no longer credible and the individual may be prevented from using the device.

Possession of a valid, State-issued disability parking placard or card or a verbal assurance does not trump a public accommodation's valid restrictions on the use of other power-driven mobility devices. Accordingly, a credible assurance that the other power-driven mobility device is being used because of a mobility disability is not a guarantee of entry to a public accommodation because notwithstanding such a credible assurance, use of the device in a particular venue may be at odds with the legal standard in §36.311(b)(1) or with one or more of the §36.311(b)(2) factors. Only after an individual with a disability has satisfied all of the public accommodation's policies regarding the use of other power-driven mobility devices does a credible assurance become a factor in allowing the use of the device. For example, if an individual seeking to use an other power-driven mobility device fails to satisfy any of the public accommodation's stated policies regarding the use of other power-driven mobility devices, the fact that the individual legitimately possesses and presents a valid, State-issued disability parking placard or card, or State-issued proof of disability, does not trump the policy and require the public accommodation to allow the use of the device. In fact, in some instances, the presentation of a legitimately held placard or card, or State-issued proof of disability, will have no relevance or bearing at all on whether the other power-driven mobility device may be used, because the public accommodation's policy does not permit the device in question on-site under any circumstances (*e.g.*, because its use would create a substantial risk of serious harm to the immediate environment or natural or cultural resources). Thus, an individual with a mobility disability who presents a valid disability placard or card, or State-issued proof of disability, will not be able to use an ATV as an other power-driven mobility device in a mall or a restaurant if the mall or restaurant has adopted a policy banning their use for any or all of the above-mentioned reasons.

However, an individual with a mobility disability who has complied with a public accommodation's stated policies cannot be refused use of the other power-driven mobility device if he or she has provided a credible assurance that the use of the device is for a mobility disability.

SUBPART D—NEW CONSTRUCTION AND ALTERATIONS

Subpart D establishes the title III requirements applicable to new construction and alterations. The Department has amended this subpart to adopt the 2004 ADAAG, set forth the effective dates for implementation of the 2010 Standards, and make related revisions as described below.

Section 36.403 Alterations: Path of Travel

In the NPRM, the Department proposed one change to §36.403 on alterations and path of travel by adding a path of travel safe harbor. Proposed §36.403(a)(1) stated that if a private entity has constructed or altered required elements of a path of travel in accordance with the 1991 Standards, the private entity is not required to retrofit such elements to reflect incremental changes in the 2010 Standards solely because of an alteration to a primary function area served by that path of travel.

A substantial number of commenters objected to the Department's creation of a safe harbor for alterations to required elements of a path of travel that comply with the current 1991 Standards. These commenters argued that if a public accommodation already is in the process of altering its facility, there should be a legal requirement that individuals with disabilities are entitled to increased accessibility provided by the 2004 ADAAG for path of travel work. These commenters also stated that they did not believe there was a statutory basis for ''grandfathering'' facilities that comply with the 1991 Standards. Another commenter argued that the updates incorporated into the 2004 ADAAG provide very substantial improvements for access, and that since there already is a 20 percent cost limit on the amount that can be expended on path of travel alterations, there is no need for a further limitation.

Some commenters supported the safe harbor as lessening the economic costs of implementing the 2004 ADAAG for existing facilities. One commenter also stated that without the safe harbor, entities that already have complied with the 1991 Standards will have to make and pay for compliance twice, as compared to those entities that made no effort to comply in the first place. Another commenter asked that the safe harbor be revised to include pre-ADA facilities that have been made compliant with the 1991 Standards to the extent ''readily achievable'' or, in the case of alterations, ''to the maximum extent feasible,'' but that are not in full compliance with the 1991 Standards.

The final rule retains the safe harbor for required elements of a path of travel to altered primary function areas for private entities that already have complied with the 1991 Standards with respect to those required elements. As discussed with respect to §36.304, the Department believes that this safe harbor strikes an appropriate balance between ensuring that individuals with disabilities are provided access to buildings and facilities and mitigating potential financial burdens on existing places of public accommodation that are undertaking alterations subject to the 2010 Standards. This safe harbor is not a blanket exemption for facilities. If a private entity undertakes an alteration to a primary function area, only the required elements of a path of travel to that area that already comply with the 1991 Standards are subject to the safe harbor. If a private entity undertakes an alteration to a primary function area and the required elements of a path of travel to the altered area do not comply with the 1991 Standards, then the private entity must bring those elements into compliance with the 2010 Standards.

Section 36.405 Alterations: Historic Preservation

In the 1991 rule, the Department provided guidance on making alterations to buildings or facilities that are eligible for listing in the National Register of Historic Places under the National Historic Preservation Act or that are designated as historic under State or local law. That provision referenced the 1991 Standards. Because those cross-references to the 1991 Standards are no longer applicable, it is necessary in this final rule to provide new regulatory text. No substantive change in the Department's approach in this area is intended by this revision.

Section 36.406 Standards for New Construction and Alterations

Applicable standards. Section 306 of the ADA, 42 U.S.C. 12186, directs the Attorney General to issue regulations to implement title III that are consistent with the guidelines published by the Access Board. As described in greater detail elsewhere in this appendix, the Department is a statutory member of the Access Board and was involved significantly in the development of the 2004 ADAAG. Nonetheless, the Department has reviewed the standards and has determined that additional regulatory provisions are necessary to clarify how the Department will apply the 2010 Standards to places of lodging, social service center establishments, housing at a place of education, assembly areas, and medical care facilities. Those provisions are contained in §36.406(c)–(g). Each of these provisions is discussed below.

Section 36.406(a) adopts the 2004 ADAAG as part of the 2010 Standards and establishes the compliance date and triggering events for the application of those standards to both new construction and alterations. Appendix B of this final rule (Analysis and

Commentary on the 2010 ADA Standards for Accessible Design) provides a description of the major changes in the 2010 Standards (as compared to the 1991 ADAAG) and a discussion of the public comments that the Department received on specific sections of the 2004 ADAAG. A number of commenters asked the Department to revise certain provisions in the 2004 ADAAG in a manner that would reduce either the required scoping or specific technical accessibility requirements. As previously stated, the ADA requires the Department to adopt standards consistent with the guidelines adopted by the Access Board. The Department will not adopt any standards that provide less accessibility than is provided under the guidelines contained in the 2004 ADAAG because the guidelines adopted by the Access Board are ''minimum guidelines.'' 42 U.S.C. 12186(c).

In the NPRM, the Department specifically proposed amending §36.406(a) by dividing it into two sections. Proposed §36.406(a)(1) specified that new construction and alterations subject to this part shall comply with the 1991 Standards if physical construction of the property commences less than six months after the effective date of the rule. Proposed §36.406(a)(2) specified that new construction and alterations subject to this part shall comply with the proposed standards if physical construction of the property commences six months or more after the effective date of the rule. The Department also proposed deleting the advisory information now published in a table at §36.406(b).

Compliance date. When the ADA was enacted, the compliance dates for various provisions were delayed in order to provide time for covered entities to become familiar with their new obligations. Titles II and III of the ADA generally became effective on January 26, 1992, six months after the regulations were published. *See* 42 U.S.C. 12131 note; 42 U.S.C. 12181 note. New construction under title II and alterations under either title II or title III had to comply with the design standards on that date. *See* 42 U.S.C. 12131 note; 42 U.S.C. 12183(a)(2). For new construction under title III, the requirements applied to facilities designed and constructed for first occupancy after January 26, 1993—18 months after the 1991 Standards were published by the Department. *See* 42 U.S.C. 12183(a)(1).

The Department received numerous comments on the issue of effective date, many of them similar to those received in response to the ANPRM. A substantial number of commenters advocated a minimum of 18 months from publication of the final rule to the effective date for application of the standards to new construction, consistent with the time period used for implementation of the 1991 Standards. Many of these commenters argued that the 18-month period was necessary to minimize the likelihood of having to redesign projects already in the design and permitting stages at the time that the final rule is published. According to these commenters, large projects take several years from design to occupancy, and can be subject to delays from obtaining zoning, site approval, third-party design approval (*i.e.*, architectural review), and governmental permits. To the extent the new standards necessitate changes in any previous submissions or permits already issued, businesses might have to expend significant funds and incur delays due to redesign and resubmission.

Some commenters also expressed concern that a six-month period would be hard to implement given that many renovations are planned around retail selling periods, holidays, and other seasonal concerns. For example, hotels plan renovations during their slow periods, retail establishments avoid renovations during the major holiday selling periods, and businesses in certain parts of the country cannot do any major construction during parts of the winter.

Some commenters argued that chain establishments need additional time to redesign their ''master facility'' designs for replication at multiple locations, taking into account both the new standards and applicable State and local accessibility requirements.

Other commenters argued for extending the effective date from six months to a minimum of 12 months for many of the same reasons, and one commenter argued that there should be a tolling of the effective date for those businesses that are in the midst of the permitting process if the necessary permits are delayed due to legal challenges or other circumstances outside the business's control.

Several commenters took issue with the Department's characterization of the 2004 ADAAG and the 1991 Standards as two similar rules. These commenters argued that many provisions in the 2004 ADAAG represent a ''substantial and significant'' departure from the 1991 Standards and that it will take a great deal of time and money to identify all the changes and implement them. In particular, they were concerned that small businesses lacked the internal resources to respond quickly to the new changes and that they would have to hire outside experts to assist them. One commenter expressed concern that regardless of familiarity with the 2004 ADAAG, since the 2004 ADAAG standards are organized in an entirely different manner from the 1991 Standards, and contain, in the commenter's view, extensive changes, it will make the shift from the old to the new standards quite complicated.

Several commenters also took issue with the Department's proffered rationale that by adopting a six-month effective date, the Department was following the precedent of other Federal agencies that have adopted the 2004 ADAAG for facilities whose accessibility they regulate. These commenters argued

that the Department's title III regulation applies to a much broader range and number of facilities and programs than the other Federal agencies (*i.e.*, Department of Transportation and the General Services Administration) and that those agencies regulate accessibility primarily in either governmental facilities or facilities operated by quasi-governmental authorities.

Several commenters representing the travel, vacation, and golf industries argued that the Department should adopt a two-year effective date for new construction. In addition to many of the arguments made by commenters in support of an 18-month effective date, these commenters also argued that a two-year time frame would allow States with DOJ-certified building codes to have the time to amend their codes to meet the 2004 ADAAG so that design professionals can work from compatible codes and standards.

Several commenters recommended treating alterations differently than new construction, arguing for a one-year effective date for alterations. Another commenter representing building officials argued that a minimum of a six-month phase-in for alterations was sufficient, since a very large percentage of alteration projects ''are of a scale that they should be able to accommodate the phase-in.''

In contrast, many commenters argued that the proposed six-month effective date should be retained in the final rule.

The Department has been persuaded by concerns raised by some of the commenters that the six month compliance date proposed in the NPRM for application of the 2010 Standards may be too short for certain projects that are already in the midst of the design and permitting process. The Department has determined that for new construction and alterations, compliance with the 2010 Standards will not be required until 18 months from the date the final rule is published. This is consistent with the amount of time given when the 1991 regulation was published. Since many State and local building codes contain provisions that are consistent with 2004 ADAAG, the Department has decided that public accommodations that choose to comply with the 2010 Standards as defined in §36.104 before the compliance date will still be considered in compliance with the ADA. However, public accommodations that choose to comply with the 2010 Standards in lieu of the 1991 Standards prior to the compliance date described in this rule must choose one or the other standard, and may not rely on some of the requirements contained in one standard and some of the requirements contained in the other standard.

Triggering event. In the NPRM, the Department proposed using the start of physical construction as the triggering event for applying the proposed standards to new construction under title III. This triggering event parallels that for the alterations provisions (*i.e.*, the date on which construction begins), and would apply clearly across all types of covered public accommodations. The Department also proposed that for prefabricated elements, such as modular buildings and amusement park rides and attractions, or installed equipment, such as ATMs, the start of construction means the date on which the site preparation begins. Site preparation includes providing an accessible route to the element.

The Department's NPRM sought public comment on how to define the start of construction and the practicality of applying commencement of construction as a triggering event. The Department also requested input on whether the proposed definition of the start of construction was sufficiently clear and inclusive of different types of facilities. The Department also sought input about facilities subject to title III for which commencement of construction would be ambiguous or problematic.

The Department received numerous comments recommending that the Department adopt a two-pronged approach to defining the triggering event. In those cases where permits are required, the Department should use ''date of permit application'' as the effective date triggering event, and if no permit is required, the Department should use ''start of construction.'' A number of these commenters argued that the date of permit application is appropriate because the applicant would have to consider the applicable State and Federal accessibility standards in order to submit the designs usually required with the application. Moreover, the date of permit application is a typical triggering event in other code contexts, such as when jurisdictions introduce an updated building code. Some commenters expressed concern that using the date of ''start of construction'' was problematic because the date can be affected by factors that are outside the control of the owner. For example, an owner can plan construction to start before the new standards take effect and therefore use the 1991 Standards in the design. If permits are not issued in a timely manner, then the construction could be delayed until after the effective date, and then the project would have to be redesigned. This problem would be avoided if the permit application date was the triggering event. Two commenters expressed concern that the term ''start of construction'' is ambiguous, because it is unclear whether start of construction means the razing of structures on the site to make way for a new facility or means site preparation, such as regrading or laying the foundation.

One commenter recommended using the ''signing date of a construction contract,'' and an additional commenter recommended

that the new standards apply only to ''buildings permitted after the effective date of the regulations.''

One commenter stated that for facilities that fall outside the building permit requirements (ATMs, prefabricated saunas, small sheds), the triggering event should be the date of installation, rather than the date the space for the facility is constructed.

The Department is persuaded by the comments to adopt a two-pronged approach to defining the triggering event for new construction and alterations. The final rule states that in those cases where permits are required, the triggering event shall be the date when the last application for a building permit application or permit extension is certified to be complete by a State, county, or local government, or in those jurisdictions where the government does not certify completion of applications, the date when the last application for a building permit or permit extension is received by the State, county, or local government. If no permits are required, then the triggering event shall be the ''start of physical construction or alterations.'' The Department has also added clarifying language related to the term ''start of physical construction or alterations'' to make it clear that ''start of physical construction or alterations'' is not intended to mean the date of ceremonial groundbreaking or the date a structure is razed to make it possible for construction of a facility to take place.

Amusement rides. Section 234 of the 2010 Standards provides accessibility guidelines for newly designed and constructed amusement rides. The amusement ride provisions do not provide a ''triggering event'' for new construction or alteration of an amusement ride. An industry commenter requested that the triggering event of ''first use'' as noted in the Advisory note to section 234.1 of the 2004 ADAAG be included in the final rule. The Advisory note provides that ''[a] custom designed and constructed ride is new upon its first use, which is the first time amusement park patrons take the ride.'' The Department declines to treat amusement rides differently than other types of new construction and alterations and under the final rule, they are subject to §36.406(a)(3). Thus, newly constructed and altered amusement rides shall comply with the 2010 Standards if the start of physical construction or the alteration is on or after 18 months from the publication date of this rule. The Department also notes that section 234.4.2 of the 2010 Standards only applies where the structural or operational characteristics of an amusement ride are altered. It does not apply in cases where the only change to a ride is the theme.

Noncomplying new construction and alterations. The element-by-element safe harbor referenced in §36.304(d)(2) has no effect on new or altered elements in existing facilities that were subject to the 1991 Standards on the date that they were constructed or altered, but do not comply with the technical and scoping specifications for those elements in the 1991 Standards. Section 36.406(a)(5) of the final rule sets forth the rules for noncompliant new construction or alterations in facilities that were subject to the requirements of this part. Under those provisions, noncomplying new construction and alterations constructed or altered after the effective date of the applicable ADA requirements and before March 15, 2012 shall, before March 15, 2012, be made accessible in accordance with either the 1991 Standards or the 2010 Standards. Noncomplying new construction and alterations constructed or altered after the effective date of the applicable ADA requirements and before March 15, 2012, shall, on or after March 15, 2012, be made accessible in accordance with the 2010 Standards.

Section 36.406(b) Application of Standards to Fixed Elements

The final rule contains a new §36.406(b) that clarifies that the requirements established by this section, including those contained in the 2004 ADAAG, prescribe the requirements necessary to ensure that fixed or built-in elements in new or altered facilities are accessible to individuals with disabilities. Once the construction or alteration of a facility has been completed, all other aspects of programs, services, and activities conducted in that facility are subject to the operational requirements established elsewhere in this final rule. Although the Department has often chosen to use the requirements of the 1991 Standards as a guide to determining when and how to make equipment and furnishings accessible, those coverage determinations fall within the discretionary authority of the Department.

The Department is also clarifying that the advisory notes, appendix notes, and figures that accompany the 1991 and 2010 Standards do not establish separately enforceable requirements unless otherwise specified in the text of the standards. This clarification has been made to address concerns expressed by ANPRM commenters who mistakenly believed that the advisory notes in the 2004 ADAAG established requirements beyond those established in the text of the guidelines (*e.g.*, Advisory 504.4 suggests, but does not require, that covered entities provide visual contrast on stair tread nosings to make them more visible to individuals with low vision). The Department received no comments on this provision in the NPRM.

Section 36.406(c) Places of Lodging

In the NPRM, the Department proposed a new definition for public accommodations that are ''places of lodging'' and a new §36.406(c) to clarify the scope of coverage for

places of public accommodation that meet this definition. For many years the Department has received inquiries from members of the public seeking clarification of ADA coverage of rental accommodations in timeshares, condominium hotels, and mixed-use and corporate hotel facilities that operate as places of public accommodation (as that term is now defined in §36.104). These facilities, which have attributes of both residential dwellings and transient lodging facilities, have become increasingly popular since the ADA's enactment in 1990 and make up the majority of new hotel construction in some vacation destinations. The hybrid residential and lodging characteristics of these new types of facilities, as well as their ownership characteristics, complicate determinations of ADA coverage, prompting questions from both industry and individuals with disabilities. While the Department has interpreted the ADA to encompass these hotel-like facilities when they are used to provide transient lodging, the regulation previously has specifically not addressed them. In the NPRM, the Department proposed a new §36.406(c), entitled ''Places of Lodging,'' which was intended to clarify that places of lodging, including certain timeshares, condominium hotels, and mixed-use and corporate hotel facilities, shall comply with the provisions of the proposed standards, including, but not limited to, the requirements for transient lodging in sections 224 and 806 of the 2004 ADAAG.

The Department's NPRM sought public input on this proposal. The Department received a substantial number of comments on these issues from industry representatives, advocates for persons with disabilities, and individuals. A significant focus of these comments was on how the Department should define and regulate vacation rental units in timeshares, vacation communities, and condo-hotels where the units are owned and controlled by individual owners and rented out some portion of time to the public, as compared to traditional hotels and motels that are owned, controlled, and rented to the public by one entity.

Scoping and technical requirements applicable to ''places of lodging.'' In the NPRM, the Department asked for public comment on its proposal in §36.406(c) to apply to places of lodging the scoping and technical requirements for transient lodging, rather than the scoping and technical requirements for residential dwelling units.

Commenters generally agreed that the transient lodging requirements should apply to places of lodging. Several commenters stated that the determination as to which requirements apply should be made based on the intention for use at the time of design and construction. According to these commenters, if units are intended for transient rentals, then the transient lodging standards should apply, and if they are intended to be used for residential purposes, the residential standards should apply. Some commenters agreed with the application of transient lodging standards to places of lodging in general, but disagreed about the characterization of certain types of facilities as covered places of lodging.

The Department agrees that the scoping and technical standards applicable to transient lodging should apply to facilities that contain units that meet the definition of ''places of lodging.''

Scoping for timeshare or condominium hotels. In the NPRM, the Department sought comment on the appropriate basis for determining scoping for a timeshare or condominium-hotel. A number of commenters indicated that scoping should be based on the usage of the facility. Only those units used for short-term stays should be counted for application of the transient lodging standards, while units sold as residential properties should be treated as residential units not subject to the ADA. One commenter stated that scoping should be based on the maximum number of sleeping units available for public rental. Another commenter pointed out that unlike traditional hotels and motels, the number of units available for rental in a facility or development containing individually owned units is not fixed over time. Owners have the right to participate in a public rental program some, all, or none of the time, and individual owner participation changes from year to year.

The Department believes that the determination for scoping should be based on the number of units in the project that are designed and constructed with the intention that their owners may participate in a transient lodging rental program. The Department cautions that it is not the number of owners that actually exercise their right to participate in the program that determines the scoping. Rather it is the units that could be placed into an on-site or off-site transient lodging rental program. In the final rule, the Department has added a provision to §36.406(c)(3), which states that units intended to be used exclusively for residential purposes that are contained in facilities that also meet the definition of place of lodging are not covered by the transient lodging standards. Title III of the ADA does not apply to units designed and constructed with the intention that they be rented or sold as exclusively residential units. Such units are covered by the Fair Housing Act (FHAct), which contains requirements for certain features of accessible and adaptable design both for units and for public and common use areas. All units designed and constructed with the intention that they may be used for both residential and transient lodging purposes are covered by the ADA and must be counted for determining the required number

of units that must meet the transient lodging standards in the 2010 Standards. Public use and common use areas in facilities containing units subject to the ADA also must meet the 2010 Standards. In some developments, units that may serve as residential units some of the time and rental units some of the time will have to meet both the FHAct and the ADA requirements. For example, all of the units in a vacation condominium facility whose owners choose to rent to the public when they are not using the units themselves would be counted for the purposes of determining the appropriate number of units that must comply with the 2010 Standards. In a newly constructed condominium that has three floors with units dedicated to be sold solely as residential housing and three floors with units that may be used as residences or hotel units, only the units on the three latter floors would be counted for applying the 2010 Standards. In a newly constructed timeshare development containing 100 units, all of which may be made available to the public through an exchange or rental program, all 100 units would be counted for purposes of applying the 2010 Standards.

One commenter also asked the Department for clarification of how to count individually owned ''lock-off units.'' Lock-off units are units that are multi-bedroom but can be ''locked off'' into two separate units, each having individual external access. This commenter requested that the Department state in the final rule that individually owned lock-off units do not constitute multiple guest rooms for purposes of calculating compliance with the scoping requirements for accessible units, since for the most part the lock-off units are used as part of a larger accessible unit, and portions of a unit not locked off would constitute both an accessible one-bedroom unit or an accessible two-bedroom unit with the lock-off unit.

It is the Department's view that lock-off units that are individually owned that can be temporarily converted into two units do not constitute two separate guest rooms for purposes of calculating compliance with the scoping requirements.

One commenter asked the Department how developers should scope units where buildings are constructed in phases over a span of years, recommending that the scoping be based on the total number of units expected to be constructed at the project and not on a building-by-building basis or on a phase-by-phase basis. The Department does not think scoping should be based on planned number of units, which may or may not be actually constructed over a period of years. However, the Department recognizes that resort developments may contain buildings and facilities that are of all sizes from single-unit cottages to facilities with hundreds of units. The Department believes it would be appropriate to allow designers, builders, and developers to aggregate the units in facilities with 50 or fewer units that are subject to a single permit application and that are on a common site or that are constructed at the same time for the purposes of applying the scoping requirements in table 224.2. Facilities with more than 50 units should be scoped individually in accordance with the table. The regulation has been revised to reflect this application of the scoping requirements.

One commenter also asked the Department to use the title III regulation to declare that timeshares subject to the transient lodging standards are exempt from the design and construction requirements of the FHAct. The coverage of the FHAct is set by Congress and interpreted by regulations issued by the Department of Housing and Urban Development. The Department has no authority to exempt anyone from coverage of the FHAct.

Application of ADA to places of lodging that contain individually owned units. The Department believes that regardless of ownership structure for individual units, rental programs (whether they are on- or off-site) that make transient lodging guest rooms available to the public must comply with the general nondiscrimination requirements of the ADA. In addition, as provided in §36.406(c), newly constructed facilities that contain accommodations intended to be used for transient lodging purposes must comply with the 2010 Standards.

In the NPRM, the Department asked for public comment on several issues related to ensuring the availability of accessible units in a rental program operated by a place of lodging. The Department sought input on how it could address a situation in which a new or converted facility constructs the required number of accessible units, but the owners of those units choose not to participate in the rental program; whether the facility has an obligation to encourage or require owners of accessible units to participate in the rental program; and whether the facility developer, the condominium association, or the hotel operator has an obligation to retain ownership or control over a certain number of accessible units to avoid this problem.

In the NPRM, the Department sought public input on how to regulate scoping for a timeshare or condominium-rental facility that decides, after the sale of units to individual owners, to begin a rental program that qualifies the facility as a place of lodging, and how the condominium association, operator, or developer should determine which units to make accessible.

A number of commenters expressed concerns about the ability of the Department to

require owners of accessible units to participate in the rental program, to require developers, condo associations, or homeowners associations to retain ownership of accessible units, and to impose accessibility requirements on individual owners who choose to place inaccessible units into a rental program after purchase. These commenters stated that individuals who purchase accessible vacation units in condominiums, individual vacation homes, and timeshares have ownership rights in their units and may choose lawfully to make their units available to the public some, all, or none of the time. Commenters advised the Department that the Securities and Exchange Commission takes the position that if condominium units are offered in connection with participation in a required rental program for any part of the year, require the use of an exclusive rental agent, or impose conditions otherwise restricting the occupancy or rental of the unit, then that offering will be viewed as an offering of securities in the form of an investment (rather than a real estate offering). SEC Release No. 33–5347, Guidelines as to the Applicability of the Federal Securities Laws to Offers and Sales of Condominiums or Units in a Real Estate Development (Jan. 4, 1973). Consequently, most condominium developers do not impose such restrictions at the time of sale. Moreover, owners who choose to rent their units as a short-term vacation rental can select any rental or management company to lease and manage their unit, or they may rent them out on their own. They also may choose never to lease those units. Thus, there are no guarantees that at any particular time, accessible units will be available for rental by the public. According to this commenter, providing incentives for owners of accessible units to place their units in the rental program will not work, because it does not guarantee the availability of the requisite number of rooms dispersed across the development, and there is not any reasonable, identifiable source of funds to cover the costs of such incentives.

A number of commenters also indicated that it potentially is discriminatory as well as economically infeasible to require that a developer hold back the accessible units so that the units can be maintained in the rental program year-round. One commenter pointed out that if a developer did not sell the accessible condominiums or timeshares in the building inventory, the developer would be subject to a potential ADA or FHAct complaint because persons with disabilities who wanted to buy accessible units rather than rent them each year would not have the option to purchase them. In addition, if a developer held back accessible units, the cost of those units would have to be spread across all the buyers of the inaccessible units, and in many cases would make the project financially infeasible. This would be especially true for smaller projects. Finally, this commenter argued that requiring units to be part of the common elements that are owned by all of the individual unit owners is infeasible because the common ownership would result in pooled rental income, which would transform the owners into participants in a rental pool, and thus turn the sale of the condominiums into the sale of securities under SEC Release 33–5347.

Several commenters noted that requiring the operator of the rental program to own the accessible units is not feasible either because the operator of the rental program would have to have the funds to invest in the purchase of all of the accessible units, and it would not have a means of recouping its investment. One commenter stated that in Texas, it is illegal for on-site rental programs to own condominium units. Another commenter noted that such a requirement might lead to the loss of on-site rental programs, leaving owners to use individual third-party brokers, or rent the units privately. One commenter acknowledged that individual owners cannot be required to place their units in a rental pool simply to offer an accessible unit to the public, since the owners may be purchasing units for their own use. However, this commenter recommended that owners who choose to place their units in a rental pool be required to contribute to a fund that would be used to renovate units that are placed in the rental pool to increase the availability of accessible units. One commenter argued that the legal entity running the place of lodging has an obligation to retain control over the required number of accessible units to ensure that they are available in accordance with title III.

A number of commenters also argued that the Department has no legal authority to require individual owners to engage in barrier removal where an existing development adds a rental program. One commenter stated that Texas law prohibits the operator of on-site rental program from demanding that alterations be made to a particular unit. In addition, under Texas law, condominium declarations may not require some units and not others to make changes, because that would lead to unequal treatment of units and owners, which is not permissible.

One commenter stated that since it was not possible for operators of rental programs offering privately owned condominiums to comply with accessible scoping, the Department should create exemptions from the accessible scoping, especially for existing facilities. In addition, this commenter stated that if an operator of an on-site rental program were to require renovations as a condition of participation in the rental program, unit owners might just rent their units through a different broker or on their own,

in which case such requirements would not apply.

A number of commenters argued that if a development decides to create a rental program, it must provide accessible units. Otherwise the development would have to ensure that units are retrofitted. A commenter argued that if an existing building is being converted, the Department should require that if alterations of the units are performed by an owner or developer prior to sale of the units, then the alterations requirements should apply, in order to ensure that there are some accessible units in the rental pool. This commenter stated that because of the proliferation of these type of developments in Hawaii, mandatory alteration is the only way to guarantee the availability of accessible units in the long run. In this commenter's view, since conversions almost always require makeover of existing buildings, this will not lead to a significant expense.

The Department agrees with the commenters that it would not be feasible to require developers to hold back or purchase accessible units for the purposes of making them available to the public in a transient lodging rental program, nor would it be feasible to require individual owners of accessible units to participate in transient lodging rental programs.

The Department recognizes that places of lodging are developed and financed under myriad ownership and management structures and agrees that there will be circumstances where there are legal barriers to requiring compliance with either the alterations requirements or the requirements related to barrier removal. The Department has added an exception to §36.406(c), providing that in existing facilities that meet the definition of places of lodging, where the guest rooms are not owned or substantially controlled by the entity that owns, leases, or operates the overall facility and the physical features of the guest room interiors are controlled by their individual owners, the units are not subject to the alterations requirement, even where the owner rents the unit out to the public through a transient lodging rental program. In addition, the Department has added an exception to the barrier removal requirements at §36.304(g) providing that in existing facilities that meet the definition of places of lodging, where the guest rooms are not owned or substantially controlled by the entity that owns, leases, or operates the overall facility and the physical features of the guest room interiors are controlled by their individual owners, the units are not subject to the barrier removal requirement. The Department notes, however, that there are legal relationships for some timeshares and cooperatives where the ownership interests do not convey control over the physical features of units. In those cases, it may be the case that the facility has an obligation to meet the alterations or barrier removal requirements or to maintain accessible features.

Section 36.406(d) Social Service Center Establishments

In the NPRM, the Department proposed a new §36.406(d) requiring group homes, halfway houses, shelters, or similar social service center establishments that provide temporary sleeping accommodations or residential dwelling units to comply with the provisions of the 2004 ADAAG that apply to residential facilities, including, but not limited to, the provisions in sections 233 and 809.

The NPRM explained that this proposal was based on two important changes in the 2004 ADAAG. First, for the first time, residential dwelling units are explicitly covered in the 2004 ADAAG in section 233. Second, the 2004 ADAAG eliminates the language contained in the 1991 Standards addressing scoping and technical requirements for homeless shelters, group homes, and similar social service center establishments. Currently, such establishments are covered in section 9.5 of the transient lodging section of the 1991 Standards. The deletion of section 9.5 creates an ambiguity of coverage that must be addressed.

The NPRM explained the Department's belief that transferring coverage of social service center establishments from the transient lodging standards to the residential facilities standards would alleviate conflicting requirements for social service providers. The Department believes that a substantial percentage of social service providers are recipients of Federal financial assistance from the Department of Housing and Urban Development (HUD). The Department of Health and Human Services (HHS) also provides financial assistance for the operation of shelters through the Administration for Children and Families programs. As such, they are covered both by the ADA and section 504. UFAS is currently the design standard for new construction and alterations for entities subject to section 504. The two design standards for accessibility—the 1991 Standards and UFAS—have confronted many social service providers with separate, and sometimes conflicting, requirements for design and construction of facilities. To resolve these conflicts, the residential facilities standards in the 2004 ADAAG have been coordinated with the section 504 requirements. The transient lodging standards, however, are not similarly coordinated. The deletion of section 9.5 of the 1991 Standards from the 2004 ADAAG presented two options: (1) Require coverage under the transient lodging standards, and subject such facilities to separate, conflicting requirements for design and construction; or (2) require coverage under the residential facilities standards, which would

harmonizes the regulatory requirements under the ADA and section 504. The Department chose the option that harmonizes the regulatory requirements: coverage under the residential facilities standards.

In the NPRM, the Department expressed concern that the residential facilities standards do not include a requirement for clear floor space next to beds similar to the requirement in the transient lodging standards; as a result, the Department proposed adding a provision that would require certain social service center establishments that provide sleeping rooms with more than 25 beds to ensure that a minimum of 5 percent of the beds have clear floor space in accordance with section 806.2.3 of the 2004 ADAAG.

The Department requested information from providers who operate homeless shelters, transient group homes, halfway houses, and other social service center establishments, and from the clients of these facilities who would be affected by this proposed change. In the NPRM, the Department asked to what extent conflicts between the ADA and section 504 have affected these facilities and what the effect would be of applying the residential dwelling unit requirements to these facilities, rather than the requirements for transient lodging guest rooms.

Many of the commenters supported applying the residential facilities requirements to social service center establishments stating that even though the residential facilities requirements are less demanding, in some instances, the existence of one clear standard will result in an overall increased level of accessibility by eliminating the confusion and inaction that are sometimes caused by the current existence of multiple requirements. One commenter stated that the residential facilities guidelines were more appropriate because individuals housed in social service center establishments typically stay for a prolonged period of time, and guests of a transient lodging facility typically are not housed to participate in a program or receive services.

One commenter opposed to the proposed section argued for the application of the transient lodging standards to all social service center establishments except those that were ''intended as a person's place of abode,'' referencing the Department's question related to the definition of place of lodging in the title III NPRM. A second commenter stated that the use of transient lodging guidelines would lead to greater accessibility.

The Department continues to be concerned about alleviating the challenges for social service providers that are also subject to section 504 and that would likely be subject to conflicting requirements if the transient lodging standard were applied. Thus, the Department has retained the requirement that social service center establishments comply with the residential dwelling standards. The Department did not receive comments regarding adding a requirement for bathing options, such as a roll-in shower, in social service center establishments operated by public accommodations. The Department did, however, receive comments in support of adding such a requirement regarding public entities under title II. The Department believes that social service center establishments that provide emergency shelter to large transient populations should be able to provide bathing facilities that are accessible to persons with mobility disabilities who need roll-in showers. Because of the transient nature of the population of these large shelters, it will not be feasible to modify bathing facilities in a timely manner when faced with a need to provide a roll-in shower with a seat when requested by an overnight visitor. As a result, the Department has added a requirement that social service center establishments with sleeping accommodations for more than 50 individuals must provide at least one roll-in shower with a seat that complies with the relevant provisions of section 608 of the 2010 Standards. Transfer-type showers are not permitted in lieu of a roll-in shower with a seat, and the exceptions in sections 608.3 and 608.4 for residential dwelling units are not permitted. When separate shower facilities are provided for men and for women, at least one roll-in shower must be provided for each group. This supplemental requirement to the residential facilities standards is in addition to the supplemental requirement that was proposed in the NPRM for clear floor space in sleeping rooms with more than 25 beds.

The Department also notes that while dwelling units at some social service center establishments are also subject to FHAct design and construction requirements that require certain features of adaptable and accessible design, FHAct units do not provide the same level of accessibility that is required for residential facilities under the 2010 Standards. The FHAct requirements, where also applicable, should not be considered a substitute for the 2010 Standards. Rather, the 2010 Standards must be followed in addition to the FHAct requirements.

The Department also notes that while in the NPRM the Department used the term ''social service establishment,'' the final rule uses the term ''social service center establishment.'' The Department has made this editorial change so that the final rule is consistent with the terminology used in the ADA. *See* 42 U.S.C. 12181(7)(K).

Section 36.406(e) Housing at a Place of Education

The Department of Justice and the Department of Education share responsibility for regulation and enforcement of the ADA in

postsecondary educational settings, including architectural features. Housing types in educational settings range from traditional residence halls and dormitories to apartment or townhouse-style residences. In addition to title III of the ADA, universities and schools that are recipients of Federal financial assistance also are subject to section 504, which contains its own accessibility requirements currently through the application of UFAS. Residential housing, including housing in an educational setting, is also covered by the FHAct, which requires newly constructed multifamily housing to include certain features of accessible and adaptable design. Covered entities subject to the ADA must always be aware of, and comply with, any other Federal statutes or regulations that govern the operation of residential properties.

Although the 1991 Standards mention dormitories as a form of transient lodging, they do not specifically address how the ADA applies to dormitories and other types of residential housing provided in an educational setting. The 1991 Standards also do not contain any specific provisions for residential facilities, allowing covered entities to elect to follow the residential standards contained in UFAS. Although the 2004 ADAAG contains provisions for both residential facilities and transient lodging, the guidelines do not indicate which requirements apply to housing provided in an educational setting, leaving it to the adopting agencies to make that choice. After evaluating both sets of standards, the Department concluded that the benefits of applying the transient lodging standards outweighed the benefits of applying the residential facilities standards. Consequently, in the NPRM, the Department proposed a new §36.406(e) that provided that residence halls or dormitories operated by or on behalf of places of education shall comply with the provisions of the proposed standards for transient lodging, including, but not limited to, the provisions in sections 224 and 806 of the 2004 ADAAG.

Private universities and schools covered by title III as public accommodations are required to make their programs and activities accessible to persons with disabilities. The housing facilities that they provide have varied characteristics. College and university housing facilities typically provide housing for up to one academic year, but may be closed during school vacation periods. In the summer, they often are used for short-term stays of one to three days, a week, or several months. Graduate and faculty housing often is provided year-round in the form of apartments, which may serve individuals or families with children. These housing facilities are diverse in their layout. Some are double-occupancy rooms with a shared toilet and bathing room, which may be inside or outside the unit. Others may contain cluster, suite, or group arrangements where several rooms are located inside a defined unit with bathing, kitchen, and similar common facilities. In some cases, these suites are indistinguishable in features from traditional apartments. Universities may build their own housing facilities or enter into agreements with private developers to build, own, or lease housing to the educational institution or to its students. Academic housing may be located on the campus of the university or may be located in nearby neighborhoods.

Throughout the school year and the summer, academic housing can become program areas in which small groups meet, receptions and educational sessions are held, and social activities occur. The ability to move between rooms—both accessible rooms and standard rooms—in order to socialize, to study, and to use all public use and common use areas is an essential part of having access to these educational programs and activities. Academic housing also is used for short-term transient educational programs during the time students are not in regular residence and may be rented out to transient visitors in a manner similar to a hotel for special university functions.

The Department was concerned that applying the new construction requirements for residential facilities to educational housing facilities could hinder access to educational programs for students with disabilities. Elevators generally are not required under the 2004 ADAAG residential facilities standards unless they are needed to provide an accessible route from accessible units to public use and common use areas, while under the 2004 ADAAG as it applies to other types of facilities, multistory private facilities must have elevators unless they meet very specific exceptions. In addition, the residential facilities standards do not require accessible roll-in showers in bathrooms, while the transient lodging requirements require some of the accessible units to be served by bathrooms with roll-in showers. The transient lodging standards also require that a greater number of units have accessible features for persons with communication disabilities. The transient lodging standards provide for installation of the required accessible features so that they are available immediately, but the residential facilities standards allow for certain features of the unit to be adaptable. For example, only reinforcements for grab bars need to be provided in residential dwellings, but the actual grab bars must be installed under the transient lodging standards. By contrast, the residential facilities standards do require certain features that provide greater accessibility within units, such as usable kitchens and an accessible route throughout the dwelling. The residential facilities standards also require 5 percent of the units to be accessible to persons with mobility disabilities, which

is a continuation of the same scoping that is currently required under UFAS and is therefore applicable to any educational institution that is covered by section 504. The transient lodging standards require a lower percentage of accessible sleeping rooms for facilities with large numbers of rooms than is required by UFAS. For example, if a dormitory has 150 rooms, the transient lodging standards would require 7 accessible rooms, while the residential standards would require 8. In a large dormitory with 500 rooms, the transient lodging standards would require 13 accessible rooms, and the residential facilities standards would require 25. There are other differences between the two sets of standards, including requirements for accessible windows, alterations, kitchens, an accessible route throughout a unit, and clear floor space in bathrooms allowing for a side transfer.

In the NPRM, the Department requested public comment on how to scope educational housing facilities, and it asked whether the residential facilities requirements or the transient lodging requirements in the 2004 ADAAG would be more appropriate for housing at places of education and asked how the different requirements would affect the cost of building new dormitories and other student housing. *See* 73 FR 34508, 34545 (June 17, 2008).

The Department received several comments on this issue under title III. One commenter stated that the Department should adopt the residential facilities standards for housing at a place of education. In the commenter's view, the residential facilities standards are congruent with overlapping requirements imposed by HUD, and the residential facilities requirements would ensure dispersion of accessible features more effectively. This commenter also argued that while the increased number of required accessible units for residential facilities as compared to transient lodging may increase the cost of construction or alteration, this cost would be offset by a reduced need later to adapt rooms if the demand for accessible rooms exceeds the supply. The commenter also encouraged the Department to impose a visitability (accessible doorways and necessary clear floor space for turning radius) requirement for both the residential facilities and transient lodging requirements to allow students with mobility impairments to interact and socialize in a fully integrated fashion. Another commenter stated that while dormitories should be treated like residences as opposed to transient lodging, the Department should ensure that ''all floors are accessible,'' thus ensuring community integration and visitability. Another commenter argued that housing at a place of education is comparable to residential housing, and that most of the housing types used by schools do not have the same amenities and services or function like transient lodging and should not be treated as such.

Several commenters focused on the length of stay at this type of housing and suggested that if the facilities are subject to occupancy for greater than 30 days, the residential standards should apply. Another commenter supported the Department's adoption of the transient lodging standards, arguing this will provide greater accessibility and therefore increase opportunities for students with disabilities to participate. One commenter, while supporting the use of transient lodging standards in this area, argued that the Department also should develop regulations relating to the usability of equipment in housing facilities by persons who are blind or visually impaired. Another commenter argued that the Department should not impose the transient lodging requirements on K–12 schools because the cost of adding elevators can be prohibitive, and because there are safety concerns related to evacuating students in wheelchairs living on floors above the ground floor in emergencies causing elevator failures.

The Department has considered the comments recommending the use of the residential facilities standards and acknowledges that they require certain features that are not included in the transient lodging standards and that should be required for housing provided at a place of education. In addition, the Department notes that since educational institutions often use their academic housing facilities as short-term transient lodging in the summers, it is important that accessible features be installed at the outset. It is not realistic to expect that the educational institution will be able to adapt a unit in a timely manner in order to provide accessible accommodations to someone attending a one-week program during the summer.

The Department has determined that the best approach to this type of housing is to continue to require the application of transient lodging standards but, at the same time, to add several requirements drawn from the residential facilities standards related to accessible turning spaces and work surfaces in kitchens, and the accessible route throughout the unit. This will ensure the maintenance of the transient lodging standard requirements related to access to all floors of the facility, roll-in showers in facilities with more than 50 sleeping rooms, and other important accessibility features not found in the residential facilities standards, but also will ensure usable kitchens and access to all the rooms in a suite or apartment.

The Department has added a new definition to §36.104, ''Housing at a Place of Education,'' and has revised §36.406(e) to reflect the accessible features that now will be required in addition to the requirements set forth under the transient lodging standards.

The Department also recognizes that some educational institutions provide some residential housing on a year-round basis to graduate students and staff that is comparable to private rental housing but contains no facilities for educational programming. Section 36.406(e)(3) exempts from the transient lodging standards apartments or townhouse facilities that are provided with a lease on a year-round basis exclusively to graduate students or faculty and that do not contain any public use or common use areas available for educational programming; instead, such housing must comply with the requirements for residential facilities in sections 233 and 809 of the 2010 Standards.

The regulatory text uses the term ''sleeping room'' in lieu of the term ''guest room,'' which is the term used in the transient lodging standards. The Department is using this term because it believes that for the most part, it provides a better description of the sleeping facilities used in a place of education than ''guest room.'' The final rule states in §36.406(e) that the Department intends the terms to be used interchangeably in the application of the transient lodging standards to housing at a place of education.

Section 36.406(f) Assembly Areas

In the NPRM, the Department proposed §36.406(f) to supplement the assembly area requirements of the 2004 ADAAG, which the Department is adopting as part of the 2010 Standards. The NPRM proposed at §36.406(f)(1) to require wheelchair spaces and companion seating locations to be dispersed to all levels of the facility that are served by an accessible route. The Department received no significant comments on this paragraph and has decided to adopt the proposed language with minor modifications.

Section 36.406(f)(1) ensures that there is greater dispersion of wheelchair spaces and companion seats throughout stadiums, arenas, and grandstands than would otherwise be required by sections 221 and 802 of the 2004 ADAAG. In some cases, the accessible route may not be the same route that other individuals use to reach their seats. For example, if other patrons reach their seats on the field by an inaccessible route (*e.g.*, by stairs), but there is an accessible route that complies with section 206.3 of the 2004 ADAAG that could be connected to seats on the field, wheelchair spaces and companion seats must be placed on the field even if that route is not generally available to the public.

Regulatory language that was included in the 2004 ADAAG advisory, but that did not appear in the NPRM, has been added by the Department in §36.406(f)(2). Section 36.406(f)(2) now requires an assembly area that has seating encircling, in whole or in part, a field of play or performance area, such as an arena or stadium, to place wheelchair spaces and companion seats around the entire facility. This rule, which is designed to prevent a public accommodation from placing wheelchair spaces and companion seats on one side of the facility only, is consistent with the Department's enforcement practices and reflects its interpretation of section 4.33.3 of the 1991 Standards.

In the NPRM, the Department proposed §36.406(f)(2), which prohibits wheelchair spaces and companion seating locations from being ''located on (or obstructed by) temporary platforms * * *.'' 73 FR 34508, 34557 (June 17, 2008). Through its enforcement actions, the Department discovered that some venues place wheelchair spaces and companion seats on temporary platforms that, when removed, reveal conventional seating underneath, or cover the wheelchair spaces and companion seats with temporary platforms on top of which they place risers of conventional seating. These platforms cover groups of conventional seats and are used to provide groups of wheelchair seats and companion seats.

Several commenters requested an exception to the prohibition of the use of temporary platforms for public accommodations that sell most of their tickets on a season-ticket or other multi-event basis. Such commenters argued that they should be able to use temporary platforms because they know, in advance, that the patrons sitting in certain areas for the whole season do not need wheelchair spaces and companion seats. The Department declines to adopt such an exception. As it explained in detail in the NPRM, the Department believes that permitting the use of movable platforms that seat four or more wheelchair users and their companions have the potential to reduce the number of available wheelchair seating spaces below the level required, thus reducing the opportunities for persons who need accessible seating to have the same choice of ticket prices and amenities that are available to other patrons in the facility. In addition, use of removable platforms may result in instances where last minute requests for wheelchair and companion seating cannot be met because entire sections of accessible seating will be lost when a platform is removed. *See* 73 FR 34508, 34546 (June 17, 2008). Further, use of temporary platforms allows facilities to limit persons who need accessible seating to certain seating areas, and to relegate accessible seating to less desirable locations. The use of temporary platforms has the effect of neutralizing dispersion and other seating requirements (*e.g.*, line of sight) for wheelchair spaces and companion seats. *Cf. Independent Living Resources* v. *Oregon Arena Corp.*, 1 F. Supp. 2d 1159, 1171 (D. Or. 1998) (holding that while a public accommodation may ''infill'' wheelchair spaces with removable seats when the wheelchair spaces are not needed to accommodate individuals with disabilities, under certain circumstances ''[s]uch a

practice might well violate the rule that wheelchair spaces must be dispersed throughout the arena in a manner that is roughly proportionate to the overall distribution of seating''). In addition, using temporary platforms to convert unsold wheelchair spaces to conventional seating undermines the flexibility facilities need to accommodate secondary ticket market exchanges as required by §36.302(f)(7) of the final rule.

As the Department explained in the NPRM, however, this provision was not designed to prohibit temporary seating that increases seating for events (*e.g.*, placing temporary seating on the floor of a basketball court for a concert). Consequently, the final rule, at §36.406(f)(3), has been amended to clarify that if an entire seating section is on a temporary platform for a particular event, then wheelchair spaces and companion seats may also be in that seating section. However, adding a temporary platform to create wheelchair spaces and companion seats that are otherwise dissimilar from nearby fixed seating and then simply adding a small number of additional seats to the platform would not qualify as an ''entire seating section'' on the platform. In addition, §36.406(f)(3) clarifies that facilities may fill in wheelchair spaces with removable seats when the wheelchair spaces are not needed by persons who use wheelchairs.

The Department has been responsive to assembly areas' concerns about reduced revenues due to unused accessible seating. Accordingly, the Department has reduced scoping requirements significantly—by almost half in large assembly areas—and determined that allowing assembly areas to infill unsold wheelchair spaces with readily removable temporary individual seats appropriately balances their economic concerns with the rights of individuals with disabilities. *See* section 221.1 of the 2010 Standards.

For stadium-style movie theaters, in §36.406(f)(4) of the NPRM the Department proposed requiring placement of wheelchair seating spaces and companion seats on a riser or cross-aisle in the stadium section of the theater that satisfies at least one of the following criteria: (1) It is located within the rear 60 percent of the seats provided in the auditorium; or (2) It is located within the area of the auditorium where the vertical viewing angles are between the 40th and 100th percentile of vertical viewing angles for all seats in that theater as ranked from the first row (1st percentile) to the back row (100th percentile). The vertical viewing angle is the angle between a horizontal line perpendicular to the seated viewer's eye to the screen and a line from the seated viewer's eye to the top of the screen.

The Department proposed this bright-line rule for two reasons: (1) the movie theater industry petitioned for such a rule; and (2) the Department has acquired expertise in the design of stadium-style theaters during its litigation with several major movie theater chains. *See United States*. v. *AMC Entertainment, Inc.*, 232 F. Supp.2d 1092 (C.D. Cal. 2002), *rev'd in part*, 549 F.3d 760 (9th Cir. 2008); *United States* v. *Cinemark USA, Inc.*, 348 F.3d 569 (6th Cir. 2003). Two industry commenters—at least one of whom otherwise supported this rule—requested that the Department explicitly state that this rule does not apply retroactively to existing theaters. Although this provision on its face applies to new construction and alterations, these commenters were concerned that the rule could be interpreted to apply retroactively because of the Department's statements in the NPRM and ANPRM that this bright line rule, although newly articulated, is not a new standard but ''merely codifi[es] longstanding Department requirement[s],'' 73 FR 34508, 34534 (June 17, 2008), and does not represent a ''substantive change from the existing line-of-sight requirements'' of section 4.33.3 of the 1991 Standards, 69 FR 58768, 58776 (Sept. 30, 2004).

Although the Department intends for §36.406(f)(4) of this rule to apply prospectively to new construction and alterations, this rule is not a departure from, and is consistent with, the line-of-sight requirements in the 1991 Standards. The Department has always interpreted the line-of-sight requirements in the 1991 Standards to require viewing angles provided to patrons who use wheelchairs to be comparable to those afforded to other spectators. Section 36.406(f)(4) merely represents the application of these requirements to stadium-style movie theaters.

One commenter from a trade association sought clarification whether §36.406(f)(4) applies to stadium-style theaters with more than 300 seats, and argued that it should not since dispersion requirements apply in those theaters. The Department declines to limit this rule to stadium-style theaters with 300 or fewer seats; stadium-style theaters of all sizes must comply with this rule. So, for example, stadium-style theaters that must vertically disperse wheelchair spaces and companion seats must do so within the parameters of this rule.

The NPRM included a provision that required assembly areas with more than 5,000 seats to provide at least five wheelchair spaces with at least three companion seats for each of those five wheelchair spaces. The Department agrees with commenters who asserted that group seating is better addressed through ticketing policies rather than design and has deleted that provision from this section of the final rule.

Section 36.406(g) Medical Care Facilities

In the 1991 title III regulation, there was no provision addressing the dispersion of accessible sleeping rooms in medical care facilities. The Department is aware, however, of problems that individuals with disabilities face in receiving full and equal medical care when accessible sleeping rooms are not adequately dispersed. When accessible rooms are not fully dispersed, a person with a disability is often placed in an accessible room in an area that is not medically appropriate for his or her condition, and is thus denied quick access to staff with expertise in that medical specialty and specialized equipment. While the Access Board did not establish specific design requirements for dispersion in the 2004 ADAAG, in response to extensive comments in support of dispersion it added an advisory note, Advisory 223.1 General, encouraging dispersion of accessible rooms within the facility so that accessible rooms are more likely to be proximate to appropriate qualified staff and resources.

In the NPRM, the Department sought additional comment on the issue, asking whether it should require medical care facilities, such as hospitals, to disperse their accessible sleeping rooms, and if so, by what method (by specialty area, floor, or other criteria). All of the comments the Department received on this issue supported dispersing accessible sleeping rooms proportionally by specialty area. These comments from individuals, organizations, and a building code association, argued that it would not be difficult for hospitals to disperse rooms by specialty area, given the high level of regulation to which hospitals are subject and the planning that hospitals do based on utilization trends. Further, comments suggest that without a requirement, it is unlikely that hospitals would disperse the rooms. In addition, concentrating accessible rooms in one area perpetuates segregation of individuals with disabilities, which is counter to the purpose of the ADA.

The Department has decided to require medical care facilities to disperse their accessible sleeping rooms in a manner that is proportionate by type of medical specialty. This does not require exact mathematical proportionality, which at times would be impossible. However, it does require that medical care facilities disperse their accessible rooms by medical specialty so that persons with disabilities can, to the extent practical, stay in an accessible room within the wing or ward that is appropriate for their medical needs. The language used in this rule (''in a manner that is proportionate by type of medical specialty'') is more specific than that used in the NPRM (''in a manner that enables patients with disabilities to have access to appropriate specialty services'') and adopts the concept of proportionality proposed by the commenters. Accessible rooms should be dispersed throughout all medical specialties, such as obstetrics, orthopedics, pediatrics, and cardiac care.

SUBPART F—CERTIFICATION OF STATE LAWS OR LOCAL BUILDING CODES

Subpart F contains procedures implementing section 308(b)(1)(A)(ii) of the ADA, which provides that on the application of a State or local jurisdiction, the Attorney General may certify that a State or local building code or similar ordinance meets or exceeds the minimum accessibility requirements of the Act. In enforcement proceedings, this certification will constitute rebuttable evidence that the law or code meets or exceeds the ADA's requirements. In its NPRM, the Department proposed three changes in subpart F that would streamline the process for public entities seeking certification, all of which are adopted in this final rule.

First, the Department proposed deleting the existing §36.603, which establishes the obligations of a submitting authority that is seeking certification of its code, and issue in its place informal regulatory guidance regarding certification submission requirements. Due to the deletion of §36.603, §§36.604 through 36.608 are renumbered, and §36.603 in the final rule is modified to indicate that the Assistant Attorney General for the Civil Rights Division (Assistant Attorney General) shall make a preliminary determination of equivalency after ''receipt and review of all information relevant to a request filed by a submitting official for certification of a code.'' Second, the Department proposed that the requirement in renumbered §36.604 (previously §36.605) that an informal hearing be held in Washington, DC, if the Assistant Attorney General makes a preliminary determination of equivalency be changed to a requirement that the hearing be held in the State or local jurisdiction charged with administration and enforcement of the code. Third, the Department proposed adding language to renumbered §36.606 (previously §36.607) to explain the effect of the 2010 Standards on the codes of State or local jurisdictions that were determined in the past to meet or exceed the 1991 Standards. Once the 2010 Standards take effect, certifications issued under the 1991 Standards would not have any future effect, and States and local jurisdictions with codes certified under the 1991 Standards would need to reapply for certification under the 2010 Standards. With regard to elements of existing buildings and facilities constructed in compliance with a code when a certification of equivalency was in effect, the final rule requires that in any enforcement action this compliance would be treated as rebuttable evidence of compliance with the standards then in effect. The new

provision added to §36.606 may also have implications in determining an entity's eligibility for the element-by-element safe harbor.

No substantive comments were received regarding the Department's proposed changes in subpart F, and no other changes have been made to this subpart in the final rule. The Department did receive several comments addressing other issues raised in the NPRM that are related to subpart F. Because the 2010 Standards include specific design requirements for recreation facilities and play areas that may be new to many title III facilities, the Department sought comments in the NPRM about how the certification review process would be affected if the State or local jurisdiction allocates the authority to implement the new requirements to State or local agencies that are not ordinarily involved in administering building codes. One commenter, an association of building owners and managers, suggested that because of the increased scope of the 2010 Standards, it is likely that parts of covered elements in the new standards will be under the jurisdiction of multiple State or local agencies. In light of these circumstances, the commenter recommended that the Department allow State or local agencies to seek certification even if only one State or local regulatory agency requests certification. For example, if a State agency that regulates buildings seeks certification of its building code, it should be able to do so, even if another State agency that regulates amusement rides and miniature golf courses does not seek certification.

The Department's discussion of this issue in the NPRM contemplated that all of a State or local government's accessibility requirements for title III facilities would be the subject of a request for certification. Any other approach would require the Department to certify only part of a State or local government's accessibility requirements as compared to the entirety of the revised ADA standards. As noted earlier, the Attorney General is authorized by section 308(b)(1)(A)(ii) of the ADA to certify that a State or local building code meets or exceeds the ADA's minimum accessibility requirements, which are contained in this regulation. The Department has concluded that this is a decision that must be made on a case-by-case basis because of the wide variety of enforcement schemes adopted by the States. Piecemeal certification of laws or codes that do not contain all of the minimum accessibility requirements could fail to satisfy the Attorney General's responsibility to ensure that a State or local building code meets or exceeds the minimum accessibility requirements of the Act before granting certification. However, the Department wants to permit State and local code administrators to have maximum flexibility, so the Department will leave open the possibility for case-by-case review to determine if a State has successfully met the burden of demonstrating that its accessibility codes or other laws meet or exceed the ADA requirements.

The commenter representing building owners and managers also urged the Department to extend the proposed effective date for the final rule. The commenter explained that a six-month phase-in period is inadequate for States to begin and complete a code amendment process. The commenter asserted that the inadequate phase-in period will place entities undertaking new construction and alterations, particularly in those States with certified codes, in a difficult position because State officials will continue to enforce previously certified State or local accessibility requirements that may be in conflict with the new 2010 Standards. The Department received numerous comments on the issue of the effective date, many of them similar to the concerns expressed above, in response to both the NPRM and the ANPRM. *See* appendix A discussion of compliance dates for new construction and alterations (§36.406). The Department has been persuaded by the concerns raised by many commenters addressing the time and costs related to the design process for both new construction and alterations, and has determined that for new construction and alterations, compliance with the 2010 Standards will not be required until 18 months from the date the final rule is published. For more information on the issue of the compliance date, refer to subpart D—New Construction and Alterations.

One commenter, an association of theater owners, recommended that the Department establish a training program for State building inspectors for those States that receive certification to ensure more consistent ADA compliance and to facilitate the review of builders' architectural plans. The commenter also recommended that State building inspectors, once trained, review architectural plans, and after completion and inspection of facilities, be authorized to certify that the inspected building or facility meets both the certified State and the Federal accessibility requirements. Although supportive of the idea of additional training for State and local building code officials regarding ADA compliance, the Department believes that the approach suggested by the commenter of allowing State and local code officials to determine if a covered facility is in compliance with Federal accessibility requirements is not consistent with or permissible under the statutory enforcement scheme established by the ADA. As the Department stated in the NPRM, certification of State and local codes serves, to some extent, to mitigate the absence of a Federal mechanism for conducting at the national

level a review of all architectural plans and inspecting all covered buildings under construction to ensure compliance with the ADA. In this regard, certification operates as a bridge between the obligation to comply with the 1991 Standards in new construction and alterations, and the administrative schemes of State and local governments that regulate the design and construction process. By ensuring consistency between State or local codes and Federal accessibility standards, certification has the additional benefit of streamlining the regulatory process, thereby making it easier for those in the design and construction industry to satisfy both State and Federal requirements. The Department notes, however, that although certification has the potential to increase compliance with the ADA, this result, however desirable, is not guaranteed. The ADA contemplated that there could be enforcement actions brought even in States with certified codes, and it provided some protection in litigation to builders who adhered to the provisions of the code certified to be ADA-equivalent. The Department's certification determinations make it clear that to get the benefit of certification, a facility must comply with the applicable code requirements—without relying on waivers or variances. The certified code, however, remains within the authority of the adopting State or local jurisdiction to interpret and enforce: Certification does not transform a State's building code into Federal law. Nor can certification alone authorize State and local building code officials implementing a certified code to do more than they are authorized to do under State or local law, and these officials cannot acquire authority through certification to render binding interpretations of Federal law. Therefore, the Department, while understanding the interest in obtaining greater assurance of compliance with the ADA through the interpretation and enforcement of a certified code by local code officials, declined in the NPRM to confer on local officials the authority not granted to them under the ADA to certify the compliance of individual facilities. The Department in the final rule finds no reason to alter its position on this issue in response to the comments that were received.

The commenter representing theater owners also urged the Department to provide a safe harbor to facilities constructed in compliance with State or local building codes certified under the 1991 Standards. With regard to elements of facilities constructed in compliance with a certified code prior to the effective date of the 2010 Standards, and during the period when a certification of equivalency was in effect, the Department noted in the NPRM that its approach would be consistent with the approach to the safe harbor discussed in subpart C, § 36.304 of the NPRM, with respect to elements in existing facilities constructed in compliance with the 1991 Standards. For example, elements in existing facilities in States with codes certified under the 1991 Standards would be eligible for a safe harbor if they were constructed in compliance with an ADA-certified code. In this scenario, compliance with the certified code would be treated as evidence of compliance with the 1991 Standards for purposes of determining the application of the safe harbor provision to those elements. For more information on safe harbor, refer to subpart C, § 36.304 of the final rule.

One commenter, an advocacy group for the blind, suggested that, similar to the procedures for certifying a State or local building code, the Department should establish a program to certify an entity's obligation to make its goods and services accessible to persons with sensory disabilities. The Department believes that this commenter was suggesting that covered entities should be able to request that the Department review their business operations to determine if they have met their ADA obligations. As noted earlier, subpart F contains procedures implementing section 308(b)(1)(A)(ii) of the ADA, which provides that on the application of a State or local jurisdiction, the Attorney General may certify that a State or local building code or similar ordinance meets or exceeds the minimum accessibility requirements of the ADA. The only mechanism through which the Department is authorized to ensure a covered entity's compliance with the ADA is the enforcement scheme established under section 308(b)(1)(A)(i) of the ADA. The Department notes, however, that title III of the ADA and its implementing regulation, which includes the standards for accessible design, already require existing, altered, and newly constructed places of public accommodation, such as retail stores, hotels, restaurants, movie theaters, and stadiums, to make their facilities readily accessible to and usable by individuals with disabilities, which includes individuals with sensory disabilities, so that individuals with disabilities have a full and equal opportunity to enjoy the benefits of a public accommodation's goods, services, facilities, privileges and advantages.

OTHER ISSUES

Questions Posed in the NPRM Regarding Costs and Benefits of Complying With the 2010 Standards

In the NPRM, the Department requested comments on various cost and benefit issues related to eight requirements in the Department's Initial RIA, that were projected to have incremental costs that exceeded monetized benefits by more than $100 million when using the 1991 Standards as a comparative baseline, *i.e.*, side reach, water closet clearances in single-user toilet rooms with

in-swinging doors, stairs, elevators, location of accessible routes to stages, accessible attorney areas and witness stands, assistive listening systems, and accessible teeing grounds, putting greens, and weather shelters at golf courses. 73 FR 34508, 34512 (June 17, 2008). The Department was particularly concerned about how these costs applied to alterations. The Department noted that pursuant to the ADA, the Department does not have statutory authority to modify the 2004 ADAAG and is required instead to issue regulations implementing the ADA that are consistent with the Board's guidelines. In that regard, the Department also requested comment about whether any of these eight elements in the 2010 Standards should be returned to the Access Board for further consideration, in particular as applied to alterations. Many of the comments received by the Department in response to these questions addressed both titles II and III. As a result, the Department's discussion of these comments and its response are collectively presented for both titles.

Side reach. The 1991 Standards at section 4.2.6 establish a maximum side-reach height of 54 inches. The 2010 Standards at section 308.3.1 reduce that maximum height to 48 inches. The 2010 Standards also add exceptions for certain elements to the scoping requirement for operable parts.

The vast majority of comments the Department received were in support of the lower side-reach maximum of 48 inches in the 2010 Standards. Most of these comments, but not all, were received from individuals of short stature, relatives of individuals of short stature, or organizations representing the interests of persons with disabilities, including individuals of short stature. Comments from individuals with disabilities and disability advocacy groups stated that the 48-inch side reach would permit independence in performing many activities of daily living for individuals with disabilities, including individuals of short stature, persons who use wheelchairs, and persons who have limited upper body strength. In this regard, one commenter who is a business owner pointed out that as a person of short stature there were many occasions when he was unable to exit a public restroom independently because he could not reach the door handle. The commenter said that often elevator control buttons are out of his reach, and, if he is alone, he often must wait for someone else to enter the elevator so that he can ask that person to press a floor button for him. Another commenter, who is also a person of short stature, said that he has on several occasions pulled into a gas station only to find that he was unable to reach the credit card reader on the gas pump. Unlike other customers who can reach the card reader, swipe their credit or debit cards, pump their gas, and leave the station, he must use another method to pay for his gas. Another comment from a person of short stature pointed out that as more businesses take steps to reduce labor costs—a trend expected to continue—staffed booths are being replaced with automatic machines for the sale, for example, of parking tickets and other products. He observed that the ''ability to access and operate these machines becomes ever more critical to function in society,'' and, on that basis, urged the Department to adopt the 48-inch side-reach requirement. Another individual commented that persons of short stature should not have to carry with them adaptive tools in order to access building or facility elements that are out of their reach, any more than persons in wheelchairs should have to carry ramps with them in order to gain access to facilities.

Many of the commenters who supported the revised side-reach requirement pointed out that lowering the side-reach requirement to 48 inches would avoid a problem sometimes encountered in the built environment when an element was mounted for a parallel approach at 54 inches, only to find afterwards that a parallel approach was not possible. Some commenters also suggested that lowering the maximum unobstructed side reach to 48 inches would reduce confusion among design professionals by making the unobstructed forward and side-reach maximums the same (the unobstructed forward reach in both the 1991 and 2010 Standards is 48 inches maximum). These commenters also pointed out that the ICC/ANSI A117.1 Standard, which is a private sector model accessibility standard, has included a 48-inch maximum high side-reach requirement since 1998. Many jurisdictions have already incorporated this requirement into their building codes, which these commenters believed would reduce the cost of compliance with the 2010 Standards. Because numerous jurisdictions have already adopted the 48-inch side-reach requirement, the Department's failure to adopt the 48-inch side-reach requirement in the 2010 Standards, in the view of many commenters, would result in a significant reduction in accessibility, and would frustrate efforts that have been made to harmonize private sector model construction and accessibility codes with Federal accessibility requirements. Given these concerns, they overwhelmingly opposed the idea of returning the revised side-reach requirement to the Access Board for further consideration.

The Department also received comments in support of the 48-inch side-reach requirement from an association of professional commercial property managers and operators and from State governmental entities. The association of property managers pointed out that the revised side-reach requirement provided a reasonable approach to ''regulating elevator controls and all other operable parts'' in existing facilities in light

of the manner in which the safe harbor, barrier removal, and alterations obligations will operate in the 2010 Standards. One governmental entity, while fully supporting the 48-inch side-reach requirement, encouraged the Department to adopt an exception to the lower reach range for existing facilities similar to the exception permitted in the ICC/ANSI A117.1 Standard. In response to this latter concern, the Department notes that under the safe harbor, existing facilities that are in compliance with the 1991 Standards, which required a 54-inch side-reach maximum, would not be required to comply with the lower side-reach requirement, unless there is an alteration. *See* §36.304(d)(2)(i).

A number of commenters expressed either concern with, or opposition to, the 48-inch side-reach requirement and suggested that it be returned to the Access Board for further consideration. These commenters included trade and business associations, associations of retail stores, associations of restaurant owners, retail and convenience store chains, and a model code organization. Several businesses expressed the view that the lower side-reach requirement would discourage the use of their products and equipment by most of the general public. In particular, concerns were expressed by a national association of pay phone service providers regarding the possibility that pay telephones mounted at the lower height would not be used as frequently by the public to place calls, which would result in an economic burden on the pay phone industry. The commenter described the lower height required for side reach as creating a new ''barrier'' to pay phone use, which would reduce revenues collected from pay phones and, consequently, further discourage the installation of new pay telephones. In addition, the commenter expressed concern that phone service providers would simply decide to remove existing pay phones rather than incur the costs of relocating them at the lower height. With regard to this latter concern, the commenter misunderstood the manner in which the safe harbor and barrier removal obligations under §36.304 will operate in the revised title III regulation for elements that comply with the 1991 Standards. The Department does not anticipate that wholesale relocation of pay telephones in existing facilities will be required under the final rule where the telephones in existing facilities already are in compliance with the 1991 Standards. If the pay phones comply with the 1991 Standards, the adoption of the 2010 Standards does not require retrofitting of these elements to reflect incremental changes in the 2010 Standards. *See* §36.304(d)(2). However, pay telephones that were required to meet the 1991 Standards as part of new construction or alterations, but do not in fact comply with those standards, will need to be brought into compliance with the 2010 Standards as of 18 months from the publication date of this final rule. *See* §36.406(a)(5).

The Department does not agree with the concerns expressed by the commenter about reduced revenues from pay phones mounted at lower heights. The Department believes that while given the choice some individuals may prefer to use a pay phone that is at a higher height, the availability of some phones at a lower height will not deter individuals from making needed calls.

The 2010 Standards will not require every pay phone to be installed or moved to a lowered height. The table accompanying section 217.2 of the 2010 Standards makes clear that where one or more telephones are provided on a floor, level, or an exterior site, only one phone per floor, level, or exterior site must be placed at an accessible height. Similarly, where there is one bank of phones per floor, level, or exterior site, only one phone per floor, level, or exterior site must be accessible. And if there are two or more banks of phones per floor, level, or exterior site, only one phone per bank must be placed at an accessible height.

Another comment in opposition to the lower reach range requirement was submitted on behalf of a chain of convenience stores with fuel stops. The commenter expressed the concern that the 48-inch side reach ''will make it uncomfortable for the majority of the public,'' including persons of taller stature who would need to stoop to use equipment such as fuel dispensers mounted at the lower height. The commenter offered no objective support for the observation that a majority of the public would be rendered uncomfortable if, as required in the 2010 Standards, at least one of each type of fuel dispenser at a facility was made accessible in compliance with the lower reach range. Indeed, the Department received no comments from any individuals of tall stature expressing concern about accessible elements or equipment being mounted at the 48-inch height.

Several retail, convenience store, restaurant, and amusement park commenters expressed concern about the burden the lower side-reach requirement would place on their businesses in terms of self-service food stations and vending areas if the 48-inch requirement were applied retroactively. The cost of lowering counter height, in combination with the lack of control businesses exercise over certain prefabricated service or vending fixtures, outweighed, they argued, any benefits to persons with disabilities. For this reason, they suggested the lower side-reach requirement be referred back to the Access Board.

These commenters misunderstood the safe harbor and barrier removal obligations that will be in effect under the 2010 Standards. Those existing self-service food stations and vending areas that already are in compliance

with the 1991 Standards will not be required to satisfy the 2010 Standards unless they engage in alterations. With regard to prefabricated vending machines and food service components that will be purchased and installed in businesses after the 2010 Standards become effective, the Department expects that companies will design these machines and fixtures to comply with the 2010 Standards in the future, as many have already done in the 10 years since the 48-inch side-reach requirement has been a part of the model codes and standards used by many jurisdictions as the basis for their construction codes.

A model code organization commented that the lower side-reach requirement would create a significant burden if it required entities to lower the mounting height for light switches, environmental controls, and outlets when an alteration did not include the walls where these elements were located, such as when ''an area is altered or as a path of travel obligation.'' The Department believes that the final rule adequately addresses those situations about which the commenter expressed concern by not requiring the relocation of existing elements, such as light switches, environmental controls, and outlets, unless they are altered. Moreover, under § 36.403 of the 1991 rule, costs for altering the path of travel to an altered area of primary function that exceed 20 percent of the overall costs of the alteration will continue to be deemed disproportionate.

The Department has determined that the revised side-reach requirement should not be returned to the Access Board for further consideration based in large part on the views expressed by a majority of the commenters regarding the need for, and importance of, the lower side-reach requirement to ensure access for persons with disabilities.

Alterations and water closet clearances in single-user toilet rooms with in-swinging doors. The 1991 Standards allow a lavatory to be placed a minimum of 18 inches from the water closet centerline and a minimum of 36 inches from the side wall adjacent to the water closet, which precludes side transfers. The 1991 Standards do not allow an in-swinging door in a toilet or bathing room to overlap the required clear floor space at any accessible fixture. To allow greater transfer options, section 604.3.2 of the 2010 Standards prohibits lavatories from overlapping the clear floor space at water closets, except in certain residential dwelling units. Section 603.2.3 of the 2010 Standards maintains the prohibition on doors swinging into the clear floor space or clearance required for any fixture, except that they permit the doors of toilet or bathing rooms to swing into the required turning space, provided that there is sufficient clearance space for the wheelchair outside the door swing. In addition, in single-user toilet or bathing rooms, exception 2 of section 603.2.3 of the 2010 Standards permits the door to swing into the clear floor space of an accessible fixture if a clear floor space that measures at least 30 inches by 48 inches is available outside the arc of the door swing.

The majority of commenters believed that this requirement would increase the number of toilet rooms accessible to individuals with disabilities who use wheelchairs or mobility scooters, and will make it easier for them to transfer. A number of commenters stated that there was no reason to return this provision to the Access Board. Numerous commenters noted that this requirement is already included in other model accessibility standards and many State and local building codes and that the adoption of the 2010 Standards is an important part of harmonization efforts.

Other commenters, mostly trade associations, opposed this requirement, arguing that the added cost to the industry outweighs any increase in accessibility. Two commenters stated that these proposed requirements would add two feet to the width of an accessible single-user toilet room; however, another commenter said the drawings in the proposed regulation demonstrated that there would be no substantial increase in the size of the toilet room. Several commenters stated that this requirement would require moving plumbing fixtures, walls, or doors at significant additional expense. Two commenters wanted the permissible overlap between the door swing and clearance around any fixture eliminated. One commenter stated that these new requirements will result in fewer alterations to toilet rooms to avoid triggering the requirement for increased clearances, and suggested that the Department specify that repairs, maintenance, or minor alterations would not trigger the need to provide increased clearances. Another commenter requested that the Department exempt existing guest room bathrooms and single-user toilet rooms that comply with the 1991 Standards from complying with the increased clearances in alterations.

After careful consideration of these comments, the Department believes that the revised clearances for single-user toilet rooms will allow safer and easier transfers for individuals with disabilities, and will enable a caregiver, aide, or other person to accompany an individual with a disability into the toilet room to provide assistance. The illustrations in appendix B to this final rule, ''Analysis and Commentary on the 2010 ADA Standards for Accessible Design,'' describe several ways for public entities and public accommodations to make alterations while minimizing additional costs or loss of space. Further, in any isolated instances where existing structural limitations may entail loss of space, the public entity and public accommodation may have a technical infeasibility

defense for that alteration. The Department has, therefore, decided not to return this requirement to the Access Board.

Alterations to stairs. The 1991 Standards only require interior and exterior stairs to be accessible when they provide access to levels that are not connected by an elevator, ramp, or other accessible means of vertical access. In contrast, section 210.1 of the 2010 Standards requires all newly constructed stairs that are part of a means of egress to be accessible. However, exception 2 of section 210.1 of the 2010 Standards provides that in alterations, stairs between levels connected by an accessible route need not be accessible, except that handrails shall be provided. Most commenters were in favor of this requirement for handrails in alterations, and stated that adding handrails to stairs during alterations was not only feasible and not cost prohibitive, but also provided important safety benefits. One commenter stated that making all points of egress accessible increased the number of people who could use the stairs in an emergency. A majority of the commenters did not want this requirement returned to the Access Board for further consideration.

The International Building Code (IBC), which is a private sector model construction code, contains a similar provision, and most jurisdictions enforce a version of the IBC as their building code, thereby minimizing the impact of this provision on public entities and public accommodations. The Department believes that by requiring only the addition of handrails to altered stairs where levels are connected by an accessible route, the costs of compliance for public entities and public accommodations are minimized, while safe egress for individuals with disabilities is increased. Therefore, the Department has decided not to return this requirement to the Access Board.

Alterations to elevators. Under the 1991 Standards, if an existing elevator is altered, only that altered elevator must comply with the new construction requirements for accessible elevators to the maximum extent feasible. It is therefore possible that a bank of elevators controlled by a single call system may contain just one accessible elevator, leaving an individual with a disability with no way to call an accessible elevator and thus having to wait indefinitely until an accessible elevator happens to respond to the call system. In the 2010 Standards, when an element in one elevator is altered, section 206.6.1 will require the same element to be altered in all elevators that are programmed to respond to the same call button as the altered elevator. Almost all commenters favored the proposed requirement. This requirement, according to these commenters, is necessary so a person with a disability need not wait until an accessible elevator responds to his or her call. One commenter suggested that elevator owners also could comply by modifying the call system so the accessible elevator could be summoned independently. One commenter suggested that this requirement would be difficult for small businesses located in older buildings, and one commenter suggested that this requirement be sent back to the Access Board.

After considering the comments, the Department agrees that this requirement is necessary to ensure that when an individual with a disability presses a call button, an accessible elevator will arrive. The IBC contains a similar provision, and most jurisdictions enforce a version of the IBC as their building code, minimizing the impact of this provision on public entities and public accommodations. Public entities and small businesses located in older buildings need not comply with this requirement where it is technically infeasible to do so. Further, as pointed out by one commenter, modifying the call system so the accessible elevator can be summoned independently is another means of complying with this requirement in lieu of altering all other elevators programmed to respond to the same call button. Therefore, the Department has decided not to return this requirement to the Access Board.

Location of accessible routes to stages. The 1991 Standards, at section 4.33.5, require an accessible route to connect the accessible seating and the stage, as well as other ancillary spaces used by performers. The 2010 Standards, at section 206.2.6, provide in addition that where a circulation path directly connects the seating area and the stage, the accessible route must connect directly the accessible seating and the stage, and, like the 1991 Standards, an accessible route must connect the stage with the ancillary spaces used by performers.

In the NPRM, the Department asked operators of auditoria about the extent to which auditoria already provide direct access to stages and whether there were planned alterations over the next 15 years that included accessible direct routes to stages. The Department also asked how to quantify the benefits of this requirement for persons with disabilities, and invited commenters to provide illustrative anecdotal experiences about the requirement's benefits.

The Department received many comments regarding the costs and benefits of this requirement. Although little detail was provided, many industry and governmental entity commenters anticipated that the costs of this requirement would be great and that it would be difficult to implement. They noted that premium seats may have to be removed and that load-bearing walls may have to be relocated. These commenters suggested that the significant costs would deter alterations to the stage area for a great many auditoria. Some commenters suggested that ramps to

the front of the stage may interfere with means of egress and emergency exits. Several commenters requested that the requirement apply to new construction only, and one industry commenter requested an exemption for stages used in arenas or amusement parks where there is no audience participation or where the stage is a work area for performers only. One commenter requested that the requirement not apply to temporary stages.

The final rule does not require a direct accessible route to be constructed where a direct circulation path from the seating area to the stage does not exist. Consequently, those commenters who expressed concern about the burden imposed by the revised requirement (*i.e.*, where the stage is constructed with no direct circulation path connecting the general seating and performing area) should note that the final rule will not require the provision of a direct accessible route under these circumstances. The final rule applies to permanent stages, as well as ''temporary stages,'' if there is a direct circulation path from the seating area to the stage. However, the Department recognizes that in some circumstances, such as an alteration to a primary function area, the ability to provide a direct accessible route to a stage may be costly or technically infeasible, and the auditorium owner is not precluded by the revised requirement from asserting defenses available under the regulation. In addition, the Department notes that since section 4.33.5 of the 1991 Standards requires an accessible route to a stage, the safe harbor will apply to existing facilities whose stages comply with the 1991 Standards.

Several governmental entities supported accessible auditoria and the revised requirement. One governmental entity noted that its State building code already required direct access, that it was possible to provide direct access, and that creative solutions had been found to do so.

Many advocacy groups and individual commenters strongly supported the revised requirement, discussing the acute need for direct access to stages, as such access has an impact on a great number of people at important life events, such as graduations and awards ceremonies, at collegiate and competitive performances and other school events, and at entertainment events that include audience participation. Many commenters expressed the belief that direct access is essential for integration mandates to be satisfied, and that separate routes are stigmatizing and unequal. The Department agrees with these concerns.

Commenters described the impact felt by persons in wheelchairs who are unable to access the stage at all when others are able to do so. Some of these commenters also discussed the need for the performers and production staff who use wheelchairs to have direct access to the stage, and they provided a number of examples that illustrated the importance of the rule proposed in the NPRM. Personal anecdotes were provided in comments and at the Department's public hearing on the NPRM. One mother spoke passionately and eloquently about the unequal treatment experienced by her daughter, who uses a wheelchair, at awards ceremonies and band concerts. Her daughter was embarrassed and ashamed to be carried by her father onto a stage at one band concert. When the venue had to be changed for another concert to an accessible auditorium, the band director made sure to comment that he was unhappy with the switch. Rather than endure the embarrassment and indignities, her child dropped out of band the following year.

Another father commented about how he was unable to speak from the stage at a PTA meeting at his child's school. Speaking from the floor limited his line of sight and his participation. Several examples were provided of children who could not participate on stage during graduation, awards programs, or special school events, such as plays and festivities. One student did not attend his college graduation because he would not be able to get on stage. Another student was unable to participate in the class Christmas programs or end-of-year parties unless her father could attend and lift her onto the stage. These commenters did not provide a method to quantify the benefits that would accrue by having direct access to stages. One commenter stated, however, that ''the cost of dignity and respect is without measure.''

Many industry commenters and governmental entities suggested that the requirement be sent back to the Access Board for further consideration. One industry commenter mistakenly noted that some international building codes do not incorporate the requirement and that, therefore, there is a need for further consideration. However, the Department notes that both the 2003 and 2006 editions of the IBC include scoping provisions that are almost identical to this requirement and that these editions of the model code are the most frequently used. Many individuals and advocacy group commenters requested that the requirement be adopted without further delay. These commenters spoke of the acute need for direct access to stages and the amount of time it would take to resubmit the requirement to the Access Board. Several commenters noted that the 2004 ADAAG tracks recent model codes, and that there is thus no need for further consideration. The Department agrees that no further delay is necessary and therefore has decided it will not return the requirement to the Access Board for further consideration.

Assistive listening systems. The 1991 Standards at sections 4.33.6 and 4.33.7 require assistive listening systems (ALS) in assembly

areas and prescribe general performance standards for ALS systems. In the NPRM, the Department proposed adopting the technical specifications in the 2004 ADAAG for ALS that are intended to ensure better quality and effective delivery of sound and information for persons with hearing impairments, especially those using hearing aids. The Department noted in the NPRM that since 1991, advancements in ALS and the advent of digital technology have made these systems more amenable to uniform standards, which, among other things, should ensure that a certain percentage of required ALS systems are hearing-aid compatible. 73 FR 34508, 34513 (June 17, 2008). The 2010 Standards at section 219 provide scoping requirements and at section 706 address receiver jacks, hearing aid compatibility, sound pressure level, signal-to-noise ratio, and peak clipping level. The Department requested comments specifically from arena and assembly area administrators on the cost and maintenance issues associated with ALS, and asked generally about the costs and benefits of ALS, and asked whether, based upon the expected costs of ALS, the issue should be returned to the Access Board for further consideration.

Commenters from advocacy organizations noted that persons who develop significant hearing loss often discontinue their normal routines and activities, including meetings, entertainment, and large group events, due to a sense of isolation caused by the hearing loss or embarrassment. Individuals with longstanding hearing loss may never have participated in group activities for many of the same reasons. Requiring ALS may allow individuals with disabilities to contribute to the community by joining in government and public events, and through increased economic activity associated with community activities and entertainment. Making public events and entertainment accessible to persons with hearing loss also brings families and other groups that include persons with hearing loss into more community events and activities, thus exponentially increasing the benefit from ALS.

Many commenters noted that when a person has significant hearing loss, that person may be able to hear and understand information in a quiet situation with the use of hearing aids or cochlear implants; however, as background noise increases and the distance between the source of the sound and the listener grows, and especially where there is distortion in the sound, an ALS becomes essential for basic comprehension and understanding. Commenters noted that among the 31 million Americans with hearing loss, and with a projected increase to over 78 million Americans with hearing loss by 2030, the benefit from ALS is huge and growing. Advocates for persons with disabilities and individuals commented that they appreciated the improvements in the 2004 ADAAG standards for ALS, including specifications for the ALS systems and performance standards. They noted that providing neckloops that translate the signal from the ALS transmitter to a frequency that can be heard on a hearing aid or cochlear implant are much more effective than separate ALS system headsets, which sometimes create feedback, often malfunction, and may create distractions for others seated nearby. Comments from advocates and users of ALS systems consistently noted that the Department's regulation should, at a minimum, be consistent with the 2004 ADAAG. Although there were requests for adjustments in the scoping requirements from advocates seeking increased scoping requirements, and from large venue operators seeking fewer requirements, there was no significant concern expressed by commenters about the technical specifications for ALS in the 2004 ADAAG.

Some commenters from trade associations and large venue owners criticized the scoping requirements as too onerous, and one commenter asked for a remand to the Access Board for new scoping rules. However, one State agency commented that the 2004 ADAAG largely duplicates the requirements in the 2006 IBC and the 2003 ANSI codes, which means that entities that comply with those standards would not incur additional costs associated with ADA compliance.

According to one State office of the courts, the costs to install either an infrared system or an FM system at average-sized facilities, including most courtrooms covered by title II, would be between $500 and $2,000, which the agency viewed as a small price in comparison to the benefits of inclusion. Advocacy organizations estimated wholesale costs of ALS systems at about $250 each, and individual neckloops to link the signal from the ALS transmitter to hearing aids or cochlear implants at less than $50 per unit. Many commenters pointed out that if a facility already is using induction neckloops, it would already be in compliance already and would not have any additional installation costs. One major city commented that annual maintenance is about $2,000 for the entire system of performance venues in the city. A trade association representing very large venues estimated annual maintenance and upkeep expenses, including labor and replacement parts, to be at most about $25,000 for a very large professional sports stadium.

One commenter suggested that the scoping requirements for ALS in the 2004 ADAAG were too stringent and that the Department should refer them back to the Access Board for further review and consideration. Others commented that the requirement for new ALS systems should mandate multichannel receivers capable of receiving audio description for persons who are blind, in addition to

a channel for amplification for persons who are hard of hearing. Some commenters suggested that the Department should require a set schedule and protocol of mandatory maintenance. Department regulations already require maintenance of accessible features at §36.211(a) of the title III regulation, which obligates a title III entity to maintain ALS in good working order. The Department recognizes that maintenance of ALS is key to its usability. Necessary maintenance will vary dramatically from venue to venue based upon a variety of factors including frequency of use, number of units, quality of equipment, and other items. Accordingly, the Department has determined that it is not appropriate to mandate details of maintenance, but notes that failure to maintain ALS would violate §36.211(a) of this rule.

The NPRM asked whether the Department should return the issue of ALS requirements to the Access Board for further review. The Department has received substantial feedback on the technical and scoping requirements for ALS and is convinced that these requirements are reasonable—especially in light of the fact that the requirements largely duplicate those in the 2006 IBC and the 2003 ANSI codes already adopted in many States—and that the benefits justify the requirements. In addition, the Department believes that the new specifications will make ALS work more effectively for more persons with disabilities, which, together with a growing population of new users, will increase demand for ALS, thus mooting criticism from some large venue operators about insufficient demand. Thus, the Department has determined that it is unnecessary to refer this issue back to the Access Board for reconsideration.

Accessible teeing grounds, putting greens, and weather shelters. The Department's NPRM sought public input on the proposed requirements for accessible golf courses. These requirements specifically relate to accessible routes within the boundaries of the courses, as well as the accessibility of golfing elements (*e.g.,* teeing grounds, putting greens, weather shelters).

In the NPRM, the Department sought information from the owners and operators of golf courses, both public and private, on the extent to which their courses already have golf car passages, and, if so, whether they intended to avail themselves of the proposed accessible route exception for golf car passages. 73 FR 34508, 34513 (June 17, 2008).

Most commenters expressed support for the adoption of an accessible route requirement that includes an exception permitting golf car passage as all or part of an accessible route. Comments in favor of the proposed standard came from golf course owners and operators, individuals, organizations, and disability rights groups, while comments opposing adoption of the golf course requirements generally came from golf courses and organizations representing the golf course industry.

The majority of commenters expressed the general viewpoint that nearly all golf courses provide golf cars and have either well-defined paths or permit golf cars to drive on the course where paths are not present—and thus meet the accessible route requirement. Several commenters disagreed with the assumption in the Initial RIA that virtually every tee and putting green on an existing course would need to be regraded in order to provide compliant accessible routes. According to one commenter, many golf courses are relatively flat with little slope, especially those heavily used by recreational golfers. This commenter concurred with the Department that it is likely that most existing golf courses have a golf car passage to tees and greens, thereby substantially minimizing the cost of bringing an existing golf course into compliance with the proposed standards. One commenter reported that golf course access audits found that the vast majority of public golf courses would have little difficulty in meeting the proposed golf course requirements. In the view of some commenters, providing access to golf courses would increase golf participation by individuals with disabilities.

The Department also received many comments requesting clarification of the term ''golf car passage.'' For example, one commenter requesting clarification of the term ''golf car passage'' argued that golf courses typically do not provide golf car paths or pedestrian paths onto the actual teeing grounds or greens, many of which are higher or lower than the car path. This commenter argued that if golf car passages were required to extend onto teeing grounds and greens in order to qualify for an exception, then some golf courses would have to substantially regrade teeing grounds and greens at a high cost.

After careful consideration of the comments, the Department has decided to adopt the 2010 Standards specific to golf facilities. The Department believes that in order for individuals with mobility disabilities to have an opportunity to play golf that is equal to golfers without disabilities, it is essential that golf courses provide an accessible route or accessible golf car passage to connect accessible elements and spaces within the boundary of the golf course, including teeing grounds, putting greens, and weather shelters.

Public Comments on Other NPRM Issues

Equipment and furniture. Equipment and furniture are covered under the Department's ADA regulations, including under the provision requiring modifications in policies, practices, and procedures and the provision requiring barrier removal. *See* 28 CFR 36.302,

36.304. The Department has not issued specific regulatory guidance on equipment and furniture, but proposed such regulations in 1991. The Department decided not to establish specific equipment requirements at that time because the requirements could be addressed under other sections of the regulation and because there were no appropriate accessibility standards applicable to many types of equipment at that time. *See* 28 CFR part 36, app. B (2009) (''Proposed Section 36.309 Purchase of Furniture and Equipment'').

In the NPRM, the Department announced its intention not to regulate equipment, proposing instead to continue with the current approach. The Department received numerous comments objecting to this decision and urging the Department to issue equipment and furniture regulations. Based on these comments, the Department has decided that it needs to revisit the issuance of equipment and furniture regulations, and it intends to do so in future rulemaking.

Among the commenters' key concerns, many from the disability community objected to the Department's earlier decision not to issue equipment regulations, especially for medical equipment. These groups recommended that the Department list by name certain types of medical equipment that must be accessible, including exam tables (that lower to 15 inches above the floor or lower), scales, medical and dental chairs, and radiologic equipment (including mammography equipment). These commenters emphasized that the provision of medically-related equipment and furniture also should be specifically regulated since they are not included in the 2004 ADAAG (while depositories, change machines, fuel dispensers, and ATMs are) and because of their crucial role in the provision of healthcare. Commenters described how the lack of accessible medical equipment negatively affects the health of individuals with disabilities. For example, some individuals with mobility disabilities do not get thorough medical care because their health providers do not have accessible examination tables or scales.

Commenters also said that the Department's stated plan to assess the financial impact of free-standing equipment on businesses was not necessary, as any regulations could include a financial-balancing test. Other commenters representing persons who are blind or have low vision urged the Department to mandate accessibility for a wide range of equipment—including household appliances (stoves, washers, microwaves, and coffee makers), audiovisual equipment (stereos and DVD players), exercise machines, vending equipment, ATMs, computers at Internet cafes or hotel business centers, reservations kiosks at hotels, and point-of-sale devices—through speech output and tactile labels and controls. They argued that modern technology allows such equipment to be made accessible at minimal cost. According to these commenters, the lack of such accessibility in point-of-sale devices is particularly problematic because it forces blind individuals to provide personal or sensitive information (such as personal identification numbers) to third parties, which exposes them to identity fraud. Because the ADA does not apply directly to the manufacture of products, the Department lacks the authority to issue design requirements for equipment designed exclusively for use in private homes. *See* Department of Justice, Americans with Disabilities Act, *ADA Title III Technical Assistance Manual Covering Public Accommodations and Commercial Facilities*, III–4.4200, available at *http://www.ada.gov/taman3.html*. To the extent that equipment intended for such use is used by a covered entity to facilitate a covered service or activity, that covered entity must make the equipment accessible to the extent that it can. *See id.:* 28 CFR part 36, app. B (2009) (''Proposed Section 36.309 Purchase of Furniture and Equipment'').

Some commenters urged the Department to require swimming pool operators to provide aquatic wheelchairs for the use of persons with disabilities when the swimming pool has a sloped entry. If there is a sloped entry, a person who uses a wheelchair would require a wheelchair designed for use in the water in order to gain access to the pool since taking a personal wheelchair into water would rust and corrode the metal on the chair and damage any electrical components of a power wheelchair. Providing an aquatic wheelchair made of non-corrosive materials and designed for access into the water will protect the water from contamination and avoid damage to personal wheelchairs or other mobility aids.

Additionally, many commenters urged the Department to regulate the height of beds in accessible hotel guest rooms and to ensure that such beds have clearance at the floor to accommodate a mechanical lift. These commenters noted that in recent years, hotel beds have become higher as hotels use thicker mattresses, thereby making it difficult or impossible for many individuals who use wheelchairs to transfer onto hotel beds. In addition, many hotel beds use a solid-sided platform base with no clearance at the floor, which prevents the use of a portable lift to transfer an individual onto the bed. Consequently, individuals who bring their own lift to transfer onto the bed cannot independently get themselves onto the bed. Some commenters suggested various design options that might avoid these situations.

The Department intends to provide specific guidance relating to both hotel beds and aquatic wheelchairs in a future rulemaking. For the present, the Department reminds

covered entities that they have the obligation to undertake reasonable modifications to their current policies and procedures and to undertake barrier removal or provide alternatives to barrier removal to make their facilities accessible to persons with disabilities. In many cases, providing aquatic wheelchairs or adjusting hotel bed heights may be necessary to comply with those requirements.

Commenters from the business community objected to the lack of clarity from the NPRM as to which equipment must be accessible and how to make it accessible. Several commenters urged the Department to clarify that equipment located in a public accommodation need not meet the technical specifications of ADAAG so long as the service provided by the equipment can be provided by alternative means, such as an employee. For example, the commenters suggested that a self-service check-in kiosk in a hotel need not comply with the reach range requirement so long as a guest can check in at the front desk nearby. Several commenters argued that the Department should not require that point-of-sale devices be accessible to individuals who are blind or have low vision (although complying with accessible route and reach range was acceptable), especially until the Department adopts specific standards governing such access.

The Department has decided not to add specific scoping or technical requirements for equipment and furniture in this final rule. Other provisions of the regulation, including those requiring reasonable modifications of policies, practices, or procedures, readily achievable barrier removal, and effective communication will require the provision of accessible equipment in appropriate circumstances. Because it is clear that many commenters want the Department to provide additional specific requirements for accessible equipment, the Department plans to initiate a rulemaking to address these issues in the near future.

Accessible golf cars. An accessible golf car means a device that is designed and manufactured to be driven on all areas of a golf course, is independently usable by individuals with mobility disabilities, has a hand-operated brake and accelerator, carries golf clubs in an accessible location, and has a seat that both swivels and raises to put the golfer in a standing or semi-standing position. The 1991 regulation contained no language specifically referencing accessible golf cars. After considering the comments addressing the ANPRM's proposed requirement that golf courses make at least one specialized golf car available for the use of individuals with disabilities, and the safety of accessible golf cars and their use on golf course greens, the Department stated in the NPRM that it would not issue regulations specific to golf cars.

The Department received many comments in response to its decision to propose no new regulation specific to accessible golf cars. The majority of commenters urged the Department to require golf courses to provide accessible golf cars. These comments came from individuals, disability advocacy and recreation groups, a manufacturer of accessible golf cars, and representatives of local government. Comments supporting the Department's decision not to propose a new regulation came from golf course owners, associations, and individuals.

Many commenters argued that while the existing title III regulation covered the issue, the Department should nonetheless adopt specific regulatory language requiring golf courses to provide accessible golf cars. Some commenters noted that many local governments and park authorities that operate public golf courses have already provided accessible golf cars. Experience indicates that such golf cars may be used without damaging courses. Some argued that having accessible golf cars would increase golf course revenue by enabling more golfers with disabilities to play the game. Several commenters requested that the Department adopt a regulation specifically requiring each golf course to provide one or more accessible golf cars. Other commenters recommended allowing golf courses to make ''pooling'' arrangements to meet demands for such cars. A few commenters expressed support for using accessible golf cars to accommodate golfers with and without disabilities. Commenters also pointed out that the Departments of the Interior and Defense have already mandated that golf courses under their jurisdictional control must make accessible golf cars available unless it can be demonstrated that doing so would change the fundamental nature of the game.

While an industry association argued that at least two models of accessible golf cars meet the specifications recognized in the field, and that accessible golf cars cause no more damage to greens or other parts of golf courses than players standing or walking across the course, other commenters expressed concerns about the potential for damage associated with the use of accessible golf cars. Citing safety concerns, golf organizations recommended that an industry safety standard be developed.

Although the Department declines to add specific scoping or technical requirements for golf cars to this final rule, the Department expects to address requirements for accessible golf cars in future rulemaking. In the meantime, the Department believes that golfers with disabilities who need accessible golf cars are protected by other existing provisions in the title III regulation, including those requiring reasonable modifications of policies, practices, or procedures, and readily achievable barrier removal.

Web site accessibility. Many commenters expressed disappointment that the NPRM did not specifically require title III-covered entities to make their Web sites, through which they offer goods and services, accessible to individuals with disabilities. Commenters urged the Department to require specifically that entities that provide goods or services on the Internet make their Web sites accessible, regardless of whether or not these entities also have a ''bricks and mortar'' location. The commenters explained that such clarification was needed because of the current ambiguity caused by court decisions as to whether web-only businesses are covered under title III. Commenters argued that the cost of making Web sites accessible through Web site design is minimal, yet critical, to enabling individuals with disabilities to benefit from the goods and services an entity offers through its Web site. The Internet has become an essential tool for many Americans and, when accessible, provides individuals with disabilities great independence. Commenters recommended that, at a minimum, the Department require covered entities to meet the Electronic and Information Technology Accessibility Standards issued pursuant to section 508. Under section 508 of the Rehabilitation Act of 1973, Federal agencies are required to make their Web sites accessible. 29 U.S.C. 794(d); 36 CFR Part 1194.

The Department agrees that the ability to access the goods and services offered on the Internet through the Web sites of public accommodations is of great importance to individuals with disabilities, particularly those who are blind or who have low vision. When the ADA was enacted in 1990, the Internet was unknown to most of the public. Today, the Internet plays a critical role in daily life for personal, civic, commercial, and business purposes. In light of the growing importance of eBcommerce, ensuring nondiscriminatory access to the goods and services offered through the Web sites of covered entities can play a significant role in fulfilling the goals of the ADA.

Although the language of the ADA does not explicitly mention the Internet, the Department has taken the position that title III covers access to Web sites of public accommodations. The Department has issued guidance on the ADA as applied to the Web sites of public entities, which includes the availability of standards for Web site accessibility. *See Accessibility of State and Local Government Websites to People with Disabilities* (June 2003), available at *www.ada.gov/websites2.htm*. As the Department stated in that publication, an agency (and similarly a public accommodation) with an inaccessible Web site also may meet its legal obligations by providing an accessible alternative for individuals to enjoy its goods or services, such as a staffed telephone information line. However, such an alternative must provide an equal degree of access in terms of hours of operation and range of options and programs available. For example, if retail goods or bank services are posted on an inaccessible Web site that is available 24 hours a day, 7 days a week to individuals without disabilities, then the alternative accessible method must also be available 24 hours a day, 7 days a week. Additional guidance is available in the Web Content Accessibility Guidelines (WCAG), available at *http://www.w3.org/TR/WAI-WEBCONTENT* (last visited June 24, 2010), which are developed and maintained by the Web Accessibility Initiative, a subgroup of the World Wide Web Consortium (W3C®).

The Department did not issue proposed regulations as part of its NPRM, and thus is unable to issue specific regulatory language on Web site accessibility at this time. However, the Department expects to engage in rulemaking relating to Web site accessibility under the ADA in the near future.

Multiple chemical sensitivities. The Department received comments from a number of individuals asking the Department to add specific language to the final rule addressing the needs of individuals with chemical sensitivities. These commenters expressed concern that the presence of chemicals interferes with their ability to participate in a wide range of activities. These commenters also urged the Department to add multiple chemical sensitivities to the definition of a disability.

The Department has determined not to include specific provisions addressing multiple chemical sensitivities in the final rule. In order to be viewed as a disability under the ADA, an impairment must substantially limit one or more major life activities. An individual's major life activities of respiratory or neurological functioning may be substantially limited by allergies or sensitivity to a degree that he or she is a person with a disability. When a person has this type of disability, a covered entity may have to make reasonable modifications in its policies and practices for that person. However, this determination is an individual assessment and must be made on a case-by-case basis.

[AG Order No. 3181–2010, 75 FR 56258, Sept. 15, 2010; 76 FR 13287, Mar. 11, 2011]

APPENDIX B TO PART 36—ANALYSIS AND COMMENTARY ON THE 2010 ADA STANDARDS FOR ACCESSIBLE DESIGN

APPENDIX B TO PART 36

Analysis and Commentary on the 2010 ADA Standards for Accessible Design

The following is a discussion of substantive changes in the scoping and technical requirements for new construction and alterations

resulting from the adoption of new ADA Standards for Accessible Design (2010 Standards) in the final rules for title II (28 CFR part 35) and title III (28 CFR part 36) of the Americans with Disabilities Act (ADA). The full text of the 2010 Standards is available for review at *http://www.ada.gov*.

In the Department's revised ADA title II regulation, 28 CFR 35.104 Definitions, the Department defines the term ''2010 Standards'' to mean the 2010 ADA Standards for Accessible Design. The 2010 Standards consist of the 2004 ADA Accessibility Guidelines (ADAAG) and the requirements contained in 28 CFR 35.151.

In the Department's revised ADA title III regulation, 28 CFR 36.104 Definitions, the Department defines the term ''2010 Standards'' to mean the 2010 ADA Standards for Accessible Design. The 2010 Standards consist of the 2004 ADA Accessibility Guidelines (ADAAG) and the requirements contained in 28 CFR part 36 subpart D.

This summary addresses selected substantive changes between the 1991 ADA Standards for Accessible Design (1991 Standards) codified at 28 CFR part 36, app. A (2009) and the 2010 Standards.

Editorial changes are not discussed. Scoping and technical requirements are discussed together, where appropriate, for ease of understanding the requirements. In addition, this document addresses selected public comments received by the Department in response to its September 2004 Advance Notice of Proposed Rulemaking (ANPRM) and its June 2008 Notice of Proposed Rulemaking (NPRM).

The ANPRM and NPRM issued by the Department concerning the proposed 2010 Standards stated that comments received by the Access Board in response to its development of the ADAAG upon which the 2010 Standards are based would be considered in the development of the final Standards. Therefore, the Department will not restate here all of the comments and responses to them issued by the Access Board. The Department is supplementing the Access Board's comments and responses with substantive comments and responses here. Comments and responses addressed by the Access Board that also were separately submitted to the Department will not be restated in their entirety here.

SECTION-BY-SECTION ANALYSIS WITH PUBLIC COMMENTS

Application and Administration

102 Dimensions for Adults and Children

Section 2.1 of the 1991 Standards stated that the specifications were based upon adult dimensions and anthropometrics. The 1991 Standards did not provide specific requirements for children's elements or facilities.

Section 102 of the 2010 Standards states that the technical requirements are based on adult dimensions and anthropometrics. In addition, technical requirements are also provided based on children's dimensions and anthropometrics for drinking fountains, water closets and other elements located in toilet compartments, lavatories and sinks, dining surfaces, and work surfaces.

103 Equivalent Facilitation

This section acknowledges that nothing in these requirements prevents the use of designs, products, or technologies as alternatives to those prescribed, provided that the alternatives result in substantially equivalent or greater accessibility and usability.

A commenter encouraged the Department to include a procedure for determining equivalent facilitation. The Department believes that the responsibility for determining and demonstrating equivalent facilitation properly rests with the covered entity. The purpose of allowing for equivalent facilitation is to encourage flexibility and innovation while still ensuring access. The Department believes that establishing potentially cumbersome bureaucratic provisions for reviewing requests for equivalent facilitation is inappropriate.

104 Conventions

Dimensions. Section 104.1 of the 2010 Standards notes that dimensions not stated as a ''maximum'' or ''minimum'' are absolute. Section 104.1.1 of the 2010 Standards provides that all dimensions are subject to conventional industry tolerances except where the requirement is stated as a range with specific minimum and maximum end points. A commenter stated that the 2010 Standards restrict the application of construction tolerances only to those few requirements that are expressed as an absolute dimension.

This is an incorrect interpretation of sections 104.1 and 104.1.1 of the 2010 Standards. Construction and manufacturing tolerances apply to absolute dimensions as well as to dimensions expressed as a maximum or minimum. When the requirement states a specified range, such as in section 609.4 where grab bars must be installed between 33 inches and 36 inches above the finished floor, that range provides an adequate tolerance. Advisory 104.1.1 gives further guidance about tolerances.

Section 104.2 of the 2010 Standards provides that where the required number of elements or facilities to be provided is determined by calculations of ratios or percentages and remainders or fractions result, the next greater whole number of such elements or facilities shall be provided. Where the determination of the required size or dimension of an

element or facility involves ratios or percentages, rounding down for values less than one-half is permissible.

A commenter stated that it is customary in the building code industry to round up rather than down for values less than one-half. As noted here, where the 2010 Standards provide for scoping, any resulting fractional calculations will be rounded to the next whole number. The Department is retaining the portion of section 104.2 that permits rounding down for values less than one-half where the determination of the required size or dimension of an element or facility involves ratios or percentages. Such practice is standard with the industry, and is in keeping with model building codes.

105 Referenced Standards

Section 105 lists the industry requirements that are referenced in the 2010 Standards. This section also clarifies that where there is a difference between a provision of the 2010 Standards and the referenced requirements, the provision of the 2010 Standards applies.

106 Definitions

Various definitions have been added to the 2010 Standards and some definitions have been deleted.

One commenter asked that the term public right-of-way be defined; others asked that various terms and words defined by the 1991 Standards, but which were eliminated from the 2010 Standards, plus other words and terms used in the 2010 Standards, be defined.

The Department believes that it is not necessary to add definitions to this text because section 106.3 of the 2010 Standards provides that the meanings of terms not specifically defined in the 2010 Standards, in the Department's ADA regulations, or in referenced standards are to be defined by collegiate dictionaries in the sense that the context implies. The Department believes that this provision adequately addresses these commenters' concerns.

Scoping and Technical Requirements

202 Existing Buildings and Facilities

Alterations. Under section 4.1.6(1)(c) of the 1991 Standards if alterations to single elements, when considered together, amount to an alteration of a room or space in a building or facility, the entire room or space would have to be made accessible. This requirement was interpreted to mean that if a covered entity chose to alter several elements in a room there would come a point when so much work had been done that it would be considered that the entire room or space would have to be made accessible. Under section 202.3 of the 2010 Standards entities can alter as many elements within a room or space as they like without triggering a requirement to make the entire room or space accessible based on the alteration of individual elements. This does not, however, change the requirement that if the intent was to alter the entire room or space, the entire room or space must be made accessible and comply with the applicable requirements of Chapter 2 of the 2010 Standards.

Alterations to Primary Function Areas. Section 202.4 restates a current requirement under title III, and therefore represents no change for title III facilities or for those title II facilities that have elected to comply with the 1991 Standards. However, under the revised title II regulation, state and local government facilities that have previously elected to comply with the Uniform Federal Accessibility Standards (UFAS) instead of the 1991 Standards will no longer have that option, and thus will now be subject to the path of travel requirement. The path of travel requirement provides that when a primary function area of an existing facility is altered, the path of travel to that area (including restrooms, telephones, and drinking fountains serving the area) must also be made accessible, but only to the extent that the cost of doing so does not exceed twenty percent (20%) of the cost of the alterations to the primary function area. The UFAS requirements for a substantial alteration, though different, may have covered some of the items that will now be covered by the path of travel requirement.

Visible Alarms in Alterations to Existing Facilities. The 1991 Standards, at sections 4.1.3(14) and 4.1.6(1)(b), and sections 202.3 and 215.1 of the 2010 Standards require that when existing elements and spaces of a facility are altered, the alterations must comply with new construction requirements. Section 215.1 of the 2010 Standards adds a new exception to the scoping requirement for visible alarms in existing facilities so that visible alarms must be installed only when an existing fire alarm system is upgraded or replaced, or a new fire alarm system is installed.

Some commenters urged the Department not to include the exception and to make visible alarms a mandatory requirement for all spaces, both existing and new. Other commenters said that the exception will make the safety of individuals with disabilities dependent upon the varying age of existing fire alarm systems. Other commenters suggested that including this requirement, even with the exception, will result in significant cost to building owners and operators.

The Department believes that the language of the exception to section 215.1 of the 2010 Standards strikes a reasonable balance between the interests of individuals with disabilities and those of the business community. If undertaken at the time a system is installed, whether in a new facility or in a planned system upgrade, the cost of adding

visible alarms is reasonable. Over time, existing facilities will become fully accessible to individuals who are deaf or hard of hearing, and will add minimal costs to owners and operators.

203 General Exceptions

Limited Access Spaces and Machinery Spaces. The 1991 Standards, at section 4.1.1, contain an exception that exempts ''non-occupiable'' spaces that have limited means of access, such as ladders or very narrow passageways, and that are visited only by service personnel for maintenance, repair, or occasional monitoring of equipment, from all accessibility requirements. Sections 203.4 and 203.5 of the 2010 Standards expand this exception by removing the condition that the exempt spaces be ''non-occupiable,'' and by separating the other conditions into two independent exceptions: one for spaces with limited means of access, and the other for machinery spaces. More spaces are exempted by the exception in the 2010 Standards.

203, 206 and 215 Employee Work Areas

Common Use Circulation Paths in Employee Work Areas. The 1991 Standards at section 4.1.1(3), and the 2010 Standards at section 203.9, require employee work areas in new construction and alterations *only* to be designed and constructed so that individuals with disabilities can approach, enter, and exit the areas. Section 206.2.8 of the 2010 Standards requires accessible common use circulation paths within employee work areas unless they are subject to exceptions in sections 206.2.8, 403.5, 405.5, and 405.8. The ADA, 42 U.S.C. 12112 (b)(5)(A) and (B), requires employers to make reasonable accommodations in the workplace for individuals with disabilities, which may include modifications to work areas when needed. Providing increased access in the facility at the time of construction or alteration will simplify the process of providing reasonable accommodations when they are needed.

The requirement for accessible common use circulation paths will not apply to existing facilities pursuant to the readily achievable barrier removal requirement. The Department has consistently taken the position that barrier removal requirements do not apply to areas used exclusively by employees because the purpose of title III is to ensure that access is provided to clients and customers. *See* appendix B to the 1991 regulation implementing title III, 28 CFR part 36.

Several exceptions to section 206.2.8 of the 2010 Standards exempt common use circulation paths in employee work areas from the requirements of section 402 where it may be difficult to comply with the technical requirements for accessible routes due to the size or function of the area:

• Employee work areas, or portions of employee work areas, that are less than 300 square feet and are elevated 7 inches or more above the ground or finish floor, where elevation is essential to the function of the space, are exempt.

• Common use circulation paths within employee work areas that are less than 1,000 square feet and are defined by permanently installed partitions, counters, casework, or furnishings are exempt. Kitchens in quick service restaurants, cocktail bars, and the employee side of service counters are frequently covered by this exception.

• Common use circulation paths within exterior employee work areas that are fully exposed to the weather are exempt. Farms, ranches, and outdoor maintenance facilities are covered by this exception.

The 2010 Standards in sections 403.5 and 405.8 also contain exceptions to the technical requirements for accessible routes for circulation paths in employee work areas:

• Machinery and equipment are permitted to reduce the clear width of common use circulation paths where the reduction is essential to the function of the work performed. Machinery and equipment that must be placed a certain way to work properly, or for ergonomics or to prevent workplace injuries are covered by this exception.

• Handrails are not required on ramps, provided that they can be added in the future.

Commenters stated that the requirements set out in the 2010 Standards for accessible common use circulation paths in employee work areas are inappropriate, particularly in commercial kitchens, storerooms, and behind cocktail bars where wheelchairs would not be easily accommodated. These commenters further urged the Department not to adopt a requirement that circulation paths in employee work areas be at least 36 inches wide, including those at emergency exits.

These commenters misunderstand the scope of the provision. Nothing in the 2010 Standards requires all circulation paths in non-exempt areas to be accessible. The Department recognizes that building codes and fire and life safety codes, which are adopted by all of the states, require *primary* circulation paths in facilities, including employee work areas, to be at least 36 inches wide for purposes of emergency egress. Accessible routes also are at least 36 inches wide. Therefore, the Department anticipates that covered entities will be able to satisfy the requirement to provide accessible circulation paths by ensuring that their required *primary* circulation paths are accessible.

Individual employee work stations, such as a grocery checkout counter or an automobile service bay designed for use by one person, do not contain common use circulation paths and are not required to comply. Other work areas, such as stockrooms that typically

have narrow pathways between shelves, would be required to design only one accessible circulation path into the stockroom. It would not be necessary to make each circulation path in the room accessible. In alterations it may be technically infeasible to provide accessible common use circulation paths in some employee work areas. For example, in a stock room of a department store significant existing physical constraints, such as having to move walls to avoid the loss of space to store inventory, may mean that it is technically infeasible (*see* section 106.5 ''Defined Terms'' of the 2010 Standards) to make even the primary common use circulation path in that stock room wide enough to be accessible. In addition, the 2010 Standards include exceptions for common use circulation paths in employee work areas where it may be difficult to comply with the technical requirements for accessible routes due to the size or function of the areas. The Department believes that these exceptions will provide the flexibility necessary to ensure that this requirement does not interfere with legitimate business operations.

Visible Alarms. Section 215.3 of the 2010 Standards provides that where employee work areas in newly constructed facilities have audible alarm coverage they are required to have wiring systems that are capable of supporting visible alarms that comply with section 702 of the 2010 Standards. The 1991 Standards, at section 4.1.1(3), require visible alarms to be provided where audible fire alarm systems are provided, but do not require areas used only by employees as work areas to be equipped with accessibility features. As applied to office buildings, the 1991 Standards require visible alarms to be provided in public and common use areas such as hallways, conference rooms, break rooms, and restrooms, where audible fire alarm systems are provided.

Commenters asserted that the requirements of section 215.3 of the 2010 Standards would be burdensome to meet. These commenters also raised concerns that all employee work areas within existing buildings and facilities must be equipped with accessibility features.

The commenters' concerns about section 215.3 of the 2010 Standards represent a misunderstanding of the requirements applicable to employee work areas.

Newly constructed buildings and facilities merely are required to provide wiring so that visible alarm systems can be added as needed to accommodate employees who are deaf or hard of hearing. This is a minimal requirement without significant impact.

The other issue in the comments represents a misunderstanding of the Department's existing regulatory requirements. Employee common use areas in covered facilities (*e.g.*, locker rooms, break rooms, cafeterias, toilet rooms, corridors to exits, and other common use spaces) were required to be accessible under the 1991 Standards; areas in which employees actually perform their jobs are required to enable a person using a wheelchair or mobility device to approach, enter, and exit the area. The 2010 Standards require increased access through the accessible common use circulation path requirement, but neither the 1991 Standards nor the 2010 Standards require employee work stations to be accessible. Access to specific employee *work stations* is governed by title I of the ADA.

205 and 309 Operable Parts

Section 4.1.3, and more specifically sections 4.1.3(13), 4.27.3, and 4.27.4 of the 1991 Standards, require operable parts on accessible elements, along accessible routes, and in accessible rooms and spaces to comply with the technical requirements for operable parts, including height and operation. The 1991 Standards, at section 4.27.3, contain an exception, ''* * * where the use of special equipment dictates otherwise or where electrical and communications systems receptacles are not normally intended for use by building occupants,'' from the technical requirement for the height of operable parts. Section 205.1 of the 2010 Standards divides this exception into three exceptions covering operable parts intended only for use by service or maintenance personnel, electrical or communication receptacles serving a dedicated use, and floor electrical receptacles. Operable parts covered by these new exceptions are exempt from all of the technical requirements for operable parts in section 309. The 2010 Standards also add exceptions that exempt certain outlets at kitchen counters; heating, ventilating and air conditioning diffusers; redundant controls provided for a single element, other than light switches; and exercise machines and equipment from all of the technical requirements for operable parts. Exception 7, in section 205.1 of the 2010 Standards, exempts cleats and other boat securement devices from the accessible height requirement. Similarly, section 309.4 of the 2010 Standards exempts gas pump nozzles, but only from the technical requirement for activating force.

Reach Ranges. The 1991 Standards set the maximum height for side reach at 54 inches above the floor. The 2010 Standards, at section 308.3, lower that maximum height to 48 inches above the finish floor or ground. The 2010 Standards also add exceptions, as discussed above, to the scoping requirement for operable parts for certain elements that, among other things, will exempt them from the reach range requirements in section 308.

The 1991 Standards, at sections 4.1.3, 4.27.3, and 4.2.6, and the 2010 Standards, at sections

205.1, 228.1, 228.2, 308.3, and 309.3, require operable parts of accessible elements, along accessible routes, and in accessible rooms and spaces to be placed within the forward or side-reach ranges specified in section 308. The 2010 Standards also require at least five percent (5%) of mailboxes provided in an interior location and at least one of each type of depository, vending machine, change machine, and gas pump to meet the technical requirements for a forward or a side reach.

Section 4.2.6 of the 1991 Standards specifies a maximum 54-inch high side reach and a minimum 9-inch low side reach for an unobstructed reach depth of 10 inches maximum. Section 308.3.1 of the 2010 Standards specifies a maximum 48-inch high side reach and a minimum 15-inch low side reach where the element being reached for is unobstructed. Section 308.3.1, Exception 1, permits an obstruction that is no deeper than 10 inches between the edge of the clear floor or ground space and the element that the individual with a disability is trying to reach. Changes in the side-reach range for new construction and alterations in the 2010 Standards will affect a variety of building elements such as light switches, electrical outlets, thermostats, fire alarm pull stations, card readers, and keypads.

Commenters were divided in their views about the changes to the unobstructed side-reach range. Disability advocacy groups and others, including individuals of short stature, supported the modifications to the proposed reach range requirements. Other commenters stated that the new reach range requirements will be burdensome for small businesses to comply with. These comments argued that the new reach range requirements restrict design options, especially in residential housing.

The Department continues to believe that data submitted by advocacy groups and others provides compelling evidence that lowered reach range requirements will better serve significantly greater numbers of individuals with disabilities, including individuals of short stature, persons with limited upper body strength, and others with limited use of their arms and fingers. The change to the side-reach range was developed by the Access Board over a prolonged period in which there was extensive public participation. This process did not produce any significant data to indicate that applying the new unobstructed side-reach range requirement in new construction or during alterations would impose a significant burden.

206 and Chapter 4 Accessible Routes

Slope. The 2010 Standards provide, at section 403.3, that the cross slope of walking surfaces not be steeper than 1:48. The 1991 Standards' cross slope requirement was that it not exceed 1:50. A commenter recommended increasing the cross slope requirement to allow a maximum of ½ inch per foot (1:24) to prevent imperfections in concrete surfaces from ponding water. The Department continues to believe that the requirement that a cross slope not be steeper than 1:48 adequately provides for water drainage in most situations. The suggested changes would double the allowable cross slope and create a significant impediment for many wheelchair users and others with a mobility disability.

Accessible Routes from Site Arrival Points and Within Sites. The 1991 Standards, at sections 4.1.2(1) and (2), and the 2010 Standards, at sections 206.2.1 and 206.2.2, require that at least one accessible route be provided within the site from site arrival points to an accessible building entrance and that at least one accessible route connect accessible facilities on the same site. The 2010 Standards also add two exceptions that exempt site arrival points and accessible facilities within a site from the accessible route requirements where the only means of access between them is a vehicular way that does not provide pedestrian access.

Commenters urged the Department to eliminate the exception that exempts site arrival points and accessible facilities from the accessible route requirements where the only means of access between them is a vehicular way not providing pedestrian access. The Department declines to accept this recommendation because the Department believes that its use will be limited. If it can be reasonably anticipated that the route between the site arrival point and the accessible facilities will be used by pedestrians, regardless of whether a pedestrian route is provided, then this exception will not apply. It will apply only in the relatively rare situations where the route between the site arrival point and the accessible facility dictates vehicular access—for example, an office complex on an isolated site that has a private access road, or a self-service storage facility where all users are expected to drive to their storage units.

Another commenter suggested that the language of section 406.1 of the 2010 Standards is confusing because it states that curb ramps on accessible routes shall comply with 406, 405.2 through 405.5, and 405.10. The 1991 Standards require that curb ramps be provided wherever an accessible route crosses a curb.

The Department declines to change this language because the change is purely editorial, resulting from the overall changes in the format of the 2010 Standards. It does not change the substantive requirement. In the 2010 Standards all elements on a required accessible route must be accessible; therefore, if the accessible route crosses a curb, a curb ramp must be provided.

Areas of Sport Activity. Section 206.2.2 of the 2010 Standards requires at least one accessible route to connect accessible buildings, facilities, elements, and spaces on the same site. Advisory section 206.2.2 adds the explanation that an accessible route must connect the boundary of each area of sport activity (*e.g.*, courts and playing fields, whether indoor or outdoor). Section 206.2.12 of the 2010 Standards further requires that in court sports the accessible route must directly connect both sides of the court.

Limited-Use/Limited-Application Elevators, Destination-Oriented Elevators and Private Residence Elevators. The 1991 Standards, at section 4.1.3(5), and the 2010 Standards, at sections 206.2 and 206.6, include exceptions to the scoping requirement for accessible routes that exempt certain facilities from connecting each story with an elevator. If a facility is exempt from the scoping requirement, but nonetheless installs an elevator, the 1991 Standards require the elevator to comply with the technical requirements for elevators. The 2010 Standards add a new exception that allows a facility that is exempt from the scoping requirement to install a limited-use/limited-application (LULA) elevator. LULA elevators are also permitted in the 1991 Standards and the 2010 Standards as an alternative to platform lifts. The 2010 Standards also add a new exception that permits private residence elevators in multistory dwelling and transient lodging units. The 2010 Standards contain technical requirements for LULA elevators at section 408 and private residence elevators at section 409.

Section 407.2.1.4 of the 2010 Standards includes an exception to the technical requirements for locating elevator call buttons for destination-oriented elevators. The advisory at section 407.2.1.4 describes lobby controls for destination-oriented elevator systems. Many elevator manufacturers have recently developed these new ''buttonless'' elevator control systems. These new, more efficient elevators are usually found in high-rise buildings that have several elevators. They require passengers to enter their destination floor on an entry device, usually a keypad, in the elevator lobby. The system then sends the most efficient car available to take all of the passengers going to the sixth floor, for example, only to the sixth floor, without making stops at the third, fourth, and fifth floors on the way to the sixth floor. The challenge for individuals who are blind or have low vision is how to know which elevator car to enter, after they have entered their destination floor into the keypad.

Commenters requested that the Department impose a moratorium on the installation of destination-oriented elevators arguing that this new technology presents wayfinding challenges for persons who are blind or have low vision.

Section 407.2.1.5 of the 2010 Standards allows destination-oriented elevators to not provide call buttons with visible signals to indicate when each call is registered and when each call is answered *provided* that visible and audible signals, compliant with 407.2.2 of the 2010 Standards, indicating which elevator car to enter, are provided. This will require the responding elevator car to automatically provide audible and visible communication so that the system will always verbally and visually indicate which elevator car to enter.

As with any new technology, all users must have time to become acquainted with how to use destination-oriented elevators. The Department will monitor the use of this new technology and work with the Access Board so that there is not a decrease in accessibility as a result of permitting this new technology to be installed.

Accessible Routes to Tiered Dining Areas in Sports Facilities. The 1991 Standards, at sections 4.1.3(1) and 5.4, and section 206.2.5 of the 2010 Standards require an accessible route to be provided to all dining areas in new construction, including raised or sunken dining areas. The 2010 Standards add a new exception for tiered dining areas in sports facilities. Dining areas in sports facilities are typically integrated into the seating bowl and are tiered to provide adequate lines of sight for individuals with disabilities. The new exception requires accessible routes to be provided to at least 25 percent (25%) of the tiered dining areas in sports facilities. Each tier must have the same services and the accessible routes must serve the accessible seating.

Accessible Routes to Press Boxes. The 1991 Standards, at sections 4.1.1(1) and 4.1.3(1), cover all areas of newly constructed facilities required to be accessible, and require an accessible route to connect accessible entrances with all accessible spaces and elements within the facility. Section 201.1 of the 2010 Standards requires that all areas of newly designed and constructed buildings and facilities and altered portions of existing buildings and facilities be accessible. Sections 206.2.7(1) and (2) of the 2010 Standards add two exceptions that exempt small press boxes that are located in bleachers with entrances on only one level, and small press boxes that are free-standing structures elevated 12 feet or more above grade, from the accessible route requirement when the aggregate area of all press boxes in a sports facility does not exceed 500 square feet. The Department anticipates that this change will significantly reduce the economic impact on smaller sports facilities, such as those associated with high schools or community colleges.

Public Entrances. The 1991 Standards, at sections 4.1.3(8) and 4.1.6(1)(h), require at least fifty percent (50%) of public entrances

to be accessible. Additionally, the 1991 Standards require the number of accessible public entrances to be equivalent to the number of exits required by applicable building and fire codes. With very few exceptions, building and fire codes require at least two exits to be provided from spaces within a building and from the building itself. Therefore, under the 1991 Standards where two public entrances are planned in a newly constructed facility, both entrances are required to be accessible.

Instead of requiring accessible entrances based on the number of public entrances provided or the number of exits required (whichever is greater), section 206.4.1 of the 2010 Standards requires at least sixty percent (60%) of public entrances to be accessible. The revision is intended to achieve the same result as the 1991 Standards. Thus, under the 2010 Standards where two public entrances are planned in a newly constructed facility, both entrances must be accessible.

Where multiple public entrances are planned to serve different site arrival points, the 1991 Standards, at section 4.1.2(1), and section 206.2.1 of the 2010 Standards require at least one accessible route to be provided from each type of site arrival point provided, including accessible parking spaces, accessible passenger loading zones, public streets and sidewalks, and public transportation stops, to an accessible public entrance that serves the site arrival point.

Commenters representing small businesses recommended retaining the 1991 requirement for fifty percent (50%) of public entrances of covered entities to be accessible. These commenters also raised concerns about the impact upon existing facilities of the new sixty percent (60%) requirement.

The Department believes that these commenters misunderstand the 1991 Standards. As explained above, the requirements of the 1991 Standards generally require more than fifty percent (50%) of entrances in small facilities to be accessible. Model codes require that most buildings have more than one means of egress. Most buildings have more than one entrance, and the requirements of the 1991 Standards typically resulted in these buildings having more than one accessible entrance. Requiring at least sixty percent (60%) of public entrances to be accessible is not expected to result in a substantial increase in the number of accessible entrances compared to the requirements of the 1991 Standards. In some very large facilities this change may result in fewer accessible entrances being required by the 2010 Standards. However, the Department believes that the realities of good commercial design will result in more accessible entrances being provided for the convenience of all users.

The 1991 Standards and the 2010 Standards also contain exceptions that limit the number of accessible entrances required in alterations to existing facilities. When entrances to an existing facility are altered and the facility has an accessible entrance, the entrance being altered is not required to be accessible, unless a primary function area also is altered and then an accessible path of travel must be provided to the primary function area to the extent that the cost to do so is not disproportionate to the overall cost of the alteration.

Alterations to Existing Elevators. When a single space or element is altered, the 1991 Standards, at sections 4.1.6(1)(a) and (b), require the space or element to be made accessible. When an element in one elevator is altered, the 2010 Standards, at section 206.6.1, require the same element to be altered in all elevators that are programmed to respond to the same call button as the altered elevator.

The 2010 Standards, at sections 407.2.1–407.4.7.1.2, also contain exceptions to the technical requirements for elevators when existing elevators are altered that minimize the impact of this change.

Commenters expressed concerns about the requirement that when an element in one elevator is altered, the 2010 Standards, at section 206.6.1, will require the same element to be altered in all elevators that are programmed to respond to the same call button as the altered elevator. Commenters noted that such a requirement is burdensome and will result in costly efforts without significant benefit to individuals with disabilities.

The Department believes that this requirement is necessary to ensure that when an individual with a disability presses a call button, an accessible elevator will arrive. Without this requirement, individuals with disabilities would have to wait unnecessarily for an accessible elevator to make its way to them arbitrarily. The Department also believes that the effort required to meet this provision is minimal in the majority of situations because it is typical to upgrade all of the elevators in a bank at the same time.

Accessible Routes in Dwelling Units with Mobility Features. Sections 4.34.1 and 4.34.2 of the UFAS require the living area, kitchen and dining area, bedroom, bathroom, and laundry area, where provided, in covered dwelling units with mobility features to be on an accessible route. Where covered dwelling units have two or more bedrooms, at least two bedrooms are required to be on an accessible route.

The 2010 Standards at sections 233.3.1.1, 809.1, 809.2, 809.2.1, and 809.4 will require all spaces and elements within dwelling units with mobility features to be on an accessible route. These changes exempt unfinished attics and unfinished basements from the accessible route requirement. Section 233.3.5 of the 2010 Standards also includes an exception to the dispersion requirement that permits accessible single-story dwelling units to be

constructed, where multi-story dwelling units are one of the types of units provided.

Location of Accessible Routes. Section 4.3.2(1) of the 1991 Standards requires accessible routes connecting site arrival points and accessible building entrances to coincide with general circulation paths, to the maximum extent feasible. The 2010 Standards require all accessible routes to coincide with or be located in the same general area as general circulation paths. Additionally, a new provision specifies that where a circulation path is interior, the required accessible route must also be located in the interior of the facility. The change affects a limited number of buildings. Section 206.3 of the 2010 Standards requires all accessible routes to coincide with or be located in the same general area as general circulation paths. Designing newly constructed interior accessible routes to coincide with or to be located in the same area as general circulation paths will not typically present a difficult design challenge and is expected to impose limited design constraints. The change will have no impact on exterior accessible routes. The 1991 Standards and the 2010 Standards also require accessible routes to be located in the interior of the facility where general circulation paths are located in the interior of the facility. The revision affects a limited number of buildings.

Location of Accessible Routes to Stages. The 1991 Standards at section 4.33.5 require an accessible route to connect the accessible seating and the performing area. Section 206.2.6 of the 2010 Standards requires the accessible route to directly connect the seating area and the accessible seating, stage, and all areas of the stage, where a circulation path directly connects the seating area and the stage. Both the 1991 Standards and the 2010 Standards also require an accessible route to connect the stage and ancillary areas, such as dressing rooms, used by performers. The 2010 Standards do not require an additional accessible route to be provided to the stage. Rather, the changes specify where the accessible route to the stage, which is required by the 1991 Standards, must be located.

207 Accessible Means of Egress

General. The 1991 Standards at sections 4.1.3(9); 4.1.6(1)(g); and 4.3.10 establish scoping and technical requirements for accessible means of egress. Section 207.1 of the 2010 Standards reference the International Building Code (IBC) for scoping and technical requirements for accessible means of egress.

The 1991 Standards require the same number of accessible means of egress to be provided as the number of exits required by applicable building and fire codes. The IBC requires at least one accessible means of egress and at least two accessible means of egress where more than one means of egress is required by other sections of the building code. The changes in the 2010 Standards are expected to have minimal impact since the model fire and life safety codes, which are adopted by all of the states, contain equivalent requirements with respect to the number of accessible means of egress.

The 1991 Standards require areas of rescue assistance or horizontal exits in facilities with levels above or below the level of exit discharge. Areas of rescue assistance are spaces that have direct access to an exit, stair, or enclosure where individuals who are unable to use stairs can go to call for assistance and wait for evacuation. The 2010 Standards incorporate the requirements established by the IBC. The IBC requires an evacuation elevator designed with standby power and other safety features that can be used for emergency evacuation of individuals with disabilities in facilities with four or more stories above or below the exit discharge level, and allows exit stairways and evacuation elevators to be used as an accessible means of egress in conjunction with areas of refuge or horizontal exits. The change is expected to have minimal impact since the model fire and life safety codes, adopted by most states, already contain parallel requirements with respect to evacuation elevators.

The 1991 Standards exempt facilities equipped with a supervised automatic sprinkler system from providing areas of rescue assistance, and also exempt alterations to existing facilities from providing an accessible means of egress. The IBC exempts buildings equipped with a supervised automatic sprinkler system from certain technical requirements for areas of refuge, and also exempts alterations to existing facilities from providing an accessible means of egress.

The 1991 and 2010 Standards require signs that provide direction to or information about functional spaces to meet certain technical requirements. The 2010 Standards, at section 216.4, address exit signs. This section is consistent with the requirements of the IBC. Signs used for means of egress are covered by this scoping requirement. The requirements in the 2010 Standards require tactile signs complying with sections 703.1, 703.2 and 703.5 at doors at exit passageways, exit discharge, and at exit stairways. Directional exit signs and signs at areas of refuge required by section 216.4.3 must have visual characters and features complying with section 703.5.

Standby Power for Platform Lifts. The 2010 Standards at section 207.2 require standby power to be provided for platform lifts that are permitted to serve as part of an accessible means of egress by the IBC. The IBC permits platform lifts to serve as part of an accessible means of egress in a limited number of places where platform lifts are allowed in new construction. The 1991 Standards, at

4.1.3(5) Exception 4(a) through (d), and the 2010 Standards, at sections 206.7.1 through 206.7.10, similarly limit the places where platform lifts are allowed in new construction.

Commenters urged the Department to reconsider provisions that would require standby power to be provided for platform lifts. Concerns were raised that ensuring standby power would be too burdensome. The Department views this issue as a fundamental life safety issue. Lift users face the prospect of being trapped on the lift in the event of a power failure if standby power is not provided. The lack of standby power could be life-threatening in situations where the power failure is associated with a fire or other emergency. The use of a platform lift is generally only one of the options available to covered entities. Covered entities that are concerned about the costs associated with maintaining standby power for a lift may wish to explore design options that would incorporate the use of a ramp.

208 and 502 Parking Spaces

General. Where parking spaces are provided, the 1991 Standards, at sections 4.1.2(5)(a) and (7) and 7(a), and the 2010 Standards, at section 208.1, require a specified number of the parking spaces to be accessible. The 2010 Standards, at section 208, include an exception that exempts parking spaces used exclusively for buses, trucks, delivery vehicles, law enforcement vehicles, or for purposes of vehicular impound, from the scoping requirement for parking spaces, provided that when these lots are accessed by the public the lot has an accessible passenger loading zone.

The 2010 Standards require accessible parking spaces to be identified by signs that display the International Symbol of Accessibility. Section 216.5, Exceptions 1 and 2, of the 2010 Standards exempt certain accessible parking spaces from this signage requirement. The first exception exempts sites that have four or fewer parking spaces from the signage requirement. Residential facilities where parking spaces are assigned to specific dwelling units are also exempted from the signage requirement.

Commenters stated that the first exception, by allowing a small parking lot with four or fewer spaces not to post a sign at its one accessible space, is problematic because it could allow all drivers to park in accessible parking spaces. The Department believes that this exception provides necessary relief for small business entities that may otherwise face the prospect of having between twenty-five percent (25%) and one hundred percent (100%) of their limited parking area unavailable to their customers because they are reserved for the exclusive use of persons whose vehicles display accessible tags or parking placards. The 2010 Standards still require these businesses to ensure that at least one of their available parking spaces is designed to be accessible.

A commenter stated that accessible parking spaces must be clearly marked. The Department notes that section 502.6 of the 2010 Standards provides that accessible parking spaces must be identified by signs that include the International Symbol of Accessibility. Also, section 502.3.3 of the 2010 Standards requires that access aisles be marked so as to discourage parking in them.

Access Aisle. Section 502.3 of the 2010 Standards requires that an accessible route adjoin each access aisle serving accessible parking spaces. The accessible route connects each access aisle to accessible entrances.

Commenters questioned why the 2010 Standards would permit an accessible route used by individuals with disabilities to coincide with the path of moving vehicles. The Department believes that the 2010 Standards appropriately recognize that not all parking facilities provide separate pedestrian routes. Section 502.3 of the 2010 Standards provides the flexibility necessary to permit designers and others to determine the most appropriate location of the accessible route to the accessible entrances. If all pedestrians using the parking facility are expected to share the vehicular lanes, then the ADA permits covered entities to use the vehicular lanes as part of the accessible route. The advisory note in section 502.3 of the 2010 Standards, however, calls attention to the fact that this practice, while permitted, is not ideal. Accessible parking spaces must be located on the shortest accessible route of travel to an accessible entrance. Accessible parking spaces and the required accessible route should be located where individuals with disabilities do not have to cross vehicular lanes or pass behind parked vehicles to have access to an accessible entrance. If it is necessary to cross a vehicular lane because, for example, local fire engine access requirements prohibit parking immediately adjacent to a building, then a marked crossing running perpendicular to the vehicular route should be included as part of the accessible route to an accessible entrance.

Van Accessible Parking Spaces. The 1991 Standards, at sections 4.1.2(5)(b), 4.6.3, 4.6.4, and 4.6.5, require one in every eight accessible parking spaces to be van accessible. Section 208.2.4 of the 2010 Standards requires one in every six accessible parking spaces to be van accessible.

A commenter asked whether automobiles other than vans may park in van accessible parking spaces. The 2010 Standards do not prohibit automobiles other than vans from using van accessible parking spaces. The Department does not distinguish between vehicles that are actual ''vans'' versus other vehicles such as trucks, station wagons, sport utility vehicles, etc. since many vehicles

other than vans may be used by individuals with disabilities to transport mobility devices.

Commenters' opinions were divided on this point. Facility operators and others asked for a reduction in the number of required accessible parking spaces, especially the number of van accessible parking spaces, because they claimed these spaces often are not used. Individuals with disabilities, however, requested an increase in the scoping requirements for these parking spaces.

The Department is aware that a strong difference of opinion exists between those who use such spaces and those who must provide or maintain them. Therefore, the Department did not increase the total number of accessible spaces required. The only change was to increase the proportion of spaces that must be accessible to vans and other vehicles equipped to transport mobility devices.

Direct Access Entrances From Parking Structures. Where levels in a parking garage have direct connections for pedestrians to another facility, the 1991 Standards, at section 4.1.3(8)(b)(i), require at least one of the direct connections to be accessible. The 2010 Standards, at section 206.4.2, require all of these direct connections to be accessible.

209 and 503 Passenger Loading Zones and Bus Stops

Passenger Loading Zones at Medical Care and Long-Term Care Facilities. Sections 6.1 and 6.2 of the 1991 Standards and section 209.3 of the 2010 Standards require medical care and long-term care facilities, where the period of stay exceeds 24 hours, to provide at least one accessible passenger loading zone at an accessible entrance. The 1991 Standards also require a canopy or roof overhang at this passenger loading zone. The 2010 Standards do not require a canopy or roof overhang.

Commenters urged the Department to reinstate the requirement for a canopy or roof overhang at accessible passenger loading zones at medical care and long-term care facilities. While the Department recognizes that a canopy or roof overhang may afford useful protection from inclement weather conditions to everyone using a facility, it is not clear that the absence of such protection would impede access by individuals with disabilities. Therefore, the Department declined to reinstate that requirement.

Passenger Loading Zones. Where passenger loading zones are provided, the 1991 Standards, at sections 4.1.2(5) and 4.6.6, require at least one passenger loading zone to be accessible. Sections 209.2.1 and 503 of the 2010 Standards, require facilities such as airport passenger terminals that have long, continuous passenger loading zones to provide one accessible passenger loading zone in every continuous 100 linear feet of loading zone space. The 1991 Standards and the 2010 Standards both include technical requirements for the vehicle pull-up space (96 inches wide minimum and 20 feet long minimum). Accessible passenger loading zones must have an access aisle that is 60 inches wide minimum and extends the full length of the vehicle pull-up space. The 1991 Standards permit the access aisle to be on the same level as the vehicle pull-up space, or on the sidewalk. The 2010 Standards require the access aisle to be on the same level as the vehicle pull-up space and to be marked so as to discourage parking in the access aisle.

Commenters expressed concern that certain covered entities, particularly airports, cannot accommodate the requirements of the 2010 Standards to provide passenger loading zones, and urged a revision that would require one accessible passenger loading zone located in reasonable proximity to each building entrance served by the curb.

Commenters raised a variety of issues about the requirements at section 503 of the 2010 Standards stating that the requirements for an access aisle, width, length, and marking of passenger loading zones are not clear, do not fully meet the needs of individuals with disabilities, may run afoul of state or local requirements, or may not be needed because many passenger loading zones are typically staffed by doormen or valet parkers. The wide range of opinions expressed in these comments indicates that this provision is controversial. However, none of these comments provided sufficient data to enable the Department to determine that the requirement is not appropriate.

Valet Parking and Mechanical Access Parking Garages. The 1991 Standards, at sections 4.1.2(5)(a) and (e), and sections 208.2, 209.4, and 209.5 of the 2010 Standards require parking facilities that provide valet parking services to have an accessible passenger loading zone. The 2010 Standards extend this requirement to mechanical access parking garages. The 1991 Standards contained an exception that exempted valet parking facilities from providing accessible parking spaces. The 2010 Standards eliminate this exception. The reason for not retaining the provision is that valet parking is a service, not a facility type.

Commenters questioned why the exception for valet parking facilities from providing accessible parking spaces was eliminated. The provision was eliminated because valet parkers may not have the skills necessary to drive a vehicle that is equipped to be accessible, including use of hand controls, or when a seat is not present to accommodate a driver using a wheelchair. In that case, permitting the individual with a disability to self-park may be a required reasonable modification of policy by a covered entity.

210 and 504 Stairways

The 1991 Standards require stairs to be accessible only when they provide access to floor levels not otherwise connected by an

accessible route (*e.g.*, where the accessible route is provided by an elevator, lift, or ramp). The 2010 Standards, at sections 210.1 and 504, require all newly constructed stairs that are part of a means of egress to comply with the requirements for accessible stairs, which include requirements for accessible treads, risers, and handrails. In existing facilities, where floor levels are connected by an accessible route, only the handrail requirement will apply when the stairs are altered. Exception 2 to section 210.1 of the 2010 Standards permits altered stairs to not comply with the requirements for accessible treads and risers where there is an accessible route between floors served by the stairs.

Most commenters were in favor of this requirement for handrails in alterations and stated that adding handrails to stairs during alterations would be feasible and not costly while providing important safety benefits. The Department believes that it strikes an appropriate balance by focusing the expanded requirements on new construction. The 2010 Standards apply to stairs which are part of a required means of egress. Few stairways are not part of a means of egress. The 2010 Standards are consistent with most building codes which do not exempt stairways when the route is also served by a ramp or elevator.

211 and 602 Drinking Fountains

Sections 4.1.3(10) and 4.15 of the 1991 Standards and sections 211 and 602 of the 2010 Standards require drinking fountains to be provided for persons who use wheelchairs and for others who stand. The 1991 Standards require wall and post-mounted cantilevered drinking fountains mounted at a height for wheelchair users to provide clear floor space for a forward approach with knee and toe clearance and free standing or built-in drinking fountains to provide clear floor space for a parallel approach. The 2010 Standards require drinking fountains mounted at a height for wheelchair users to provide clear floor space for a forward approach with knee and toe clearance, and include an exception for a parallel approach for drinking fountains installed at a height to accommodate very small children. The 2010 Standards also include a technical requirement for drinking fountains for standing persons.

212 and 606 Kitchens, Kitchenettes, Lavatories, and Sinks

The 1991 Standards, at sections 4.24, and 9.2.2(7), contain technical requirements for sinks and only have specific scoping requirements for sinks in transient lodging. Section 212.3 of the 2010 Standards requires at least five percent (5%) of sinks in each accessible space to comply with the technical requirements for sinks. The technical requirements address clear floor space, height, faucets, and exposed pipes and surfaces. The 1991 Standards, at section 4.24, and the 2010 Standards, at section 606, both require the clear floor space at sinks to be positioned for a forward approach and knee and toe clearance to be provided under the sink. The 1991 Standards, at section 9.2.2(7), allow the clear floor space at kitchen sinks and wet bars in transient lodging guest rooms with mobility features to be positioned for either a forward approach with knee and toe clearance or for a parallel approach.

The 2010 Standards include an exception that permits the clear floor space to be positioned for a parallel approach at kitchen sinks in any space where a cook top or conventional range is not provided, and at a wet bar.

A commenter stated that it is unclear what the difference is between a sink and a lavatory, and that this is complicated by requirements that apply to sinks (five percent (5%) accessible) and lavatories (at least one accessible). The term ''lavatory'' generally refers to the specific type of plumbing fixture required for hand washing in toilet and bathing facilities. The more generic term ''sink'' applies to all other types of sinks located in covered facilities.

A commenter recommended that the mounting height of sinks and lavatories should take into consideration the increased use of three-wheeled scooters and some larger wheelchairs. The Department is aware that the use of three-wheeled scooters and larger wheelchairs may be increasing and that some of these devices may require changes in space requirements in the future. The Access Board is funding research to obtain data that may be used to develop design guidelines that provide access to individuals using these mobility devices.

213, 603, 604, and 608 Toilet and Bathing Facilities, Rooms, and Compartments

General. Where toilet facilities and bathing facilities are provided, they must comply with section 213 of the 2010 Standards.

A commenter recommended that all accessible toilet facilities, toilet rooms, and compartments should be required to have signage indicating that such spaces are restricted solely for the use of individuals with disabilities. The Department believes that it is neither necessary nor appropriate to restrict the use of accessible toilet facilities. Like many other facilities designed to be accessible, accessible toilet facilities can and do serve a wide range of individuals with and without disabilities.

A commenter recommended that more than one wheelchair accessible compartment be provided in toilet rooms serving airports

and train stations because these compartments are likely to be occupied by individuals with luggage and persons with disabilities often take longer to use them. The Access Board is examining airport terminal accessibility as part of an ongoing effort to facilitate accessibility and promote effective design. As part of these efforts, the Access Board will examine requirements for accessible toilet compartments in larger airport restrooms. The Department declines to change the scoping for accessible toilet compartments at this time.

Ambulatory Accessible Toilet Compartments. Section 213.3.1 of the 2010 Standards requires multi-user men's toilet rooms, where the total of toilet compartments and urinals is six or more, to contain at least one ambulatory accessible compartment. The 1991 Standards count only toilet stalls (compartments) for this purpose. The 2010 Standards establish parity between multi-user women's toilet rooms and multi-user men's toilet rooms with respect to ambulatory accessible toilet compartments.

Urinals. Men's toilet rooms with only one urinal will no longer be required to provide an accessible urinal under the 2010 Standards. Such toilet rooms will still be required to provide an accessible toilet compartment.

Commenters urged that the exception be eliminated. The Department believes that this change will provide flexibility to many small businesses and it does not alter the requirement that all common use restrooms must be accessible.

Multiple Single-User Toilet Rooms. Where multiple single-user toilet rooms are clustered in a single location, fifty percent (50%), rather than the one hundred percent (100%) required by the 1991 Standards, are required to be accessible by section 213.2, Exception 4 of the 2010 Standards. Section 216.8 of the 2010 Standards requires that accessible single-user toilet rooms must be identified by the International Symbol of Accessibility where all single-user toilet rooms are not accessible.

Hospital Patient Toilet Rooms. An exception was added in section 223.1 of the 2010 Standards to allow toilet rooms that are part of critical or intensive care patient sleeping rooms to no longer be required to provide mobility features.

Water Closet Location and Rear Grab Bar. Section 604.2 of the 2010 Standards allows greater flexibility for the placement of the centerline of wheelchair accessible and ambulatory accessible water closets. Section 604.5.2, Exception 1 permits a shorter grab bar on the rear wall where there is not enough wall space due to special circumstances (*e.g.*, when a lavatory or other recessed fixture is located next to the water closet and the wall behind the lavatory is recessed so that the lavatory does not overlap the required clear floor space at the water closet). The 1991 Standards contain no exception for grab bar length, and require the water closet centerline to be exactly 18 inches from the side wall, while the 2010 Standards requirement allows the centerline to be between 16 and 18 inches from the side wall in wheelchair accessible toilet compartments and 17 to 19 inches in ambulatory accessible toilet compartments.

Water Closet Clearance. Section 604.3 of the 2010 Standards represents a change in the accessibility requirements where a lavatory is installed adjacent to the water closet. The 1991 Standards allow the nearest side of a lavatory to be placed 18 inches minimum from the water closet centerline and 36 inches minimum from the side wall adjacent to the water closet. However, locating the lavatory so close to the water closet prohibits many individuals with disabilities from using a side transfer. To allow greater transfer options, including side transfers, the 2010 Standards prohibit lavatories from overlapping the clear floor space at water closets, except in covered residential dwelling units.

A majority of commenters, including persons who use wheelchairs, strongly agreed with the requirement to provide enough space for a side transfer. These commenters believed that the requirement will increase the usability of accessible single-user toilet rooms by making side transfers possible for many individuals who use wheelchairs and would have been unable to transfer to a water closet using a side transfer even if the water closet complied with the 1991 Standards. In addition, many commenters noted that the additional clear floor space at the side of the water closet is also critical for those providing assistance with transfers and personal care for persons with disabilities. Numerous comments noted that this requirement is already included in other model accessibility standards and many state and local building codes and its adoption in the 2010 Standards is a important part of harmonization efforts. The Department agrees that the provision of enough clear floor space to permit side transfers at water closets is an important feature that must be provided to ensure access for persons with disabilities in toilet and bathing facilities. Furthermore, the adoption of this requirement closely harmonizes with the model codes and many state and local building codes.

Other commenters urged the Department not to adopt section 604.3 of the 2010 Standards claiming that it will require single-user toilet rooms to be two feet wider than the 1991 Standards require, and this additional requirement will be difficult to meet. Multiple commentators also expressed concern that the size of single-user toilet rooms would be increased but they did not specify how much larger such toilet rooms would have to be in their estimation. In response to

these concerns, the Department developed a series of single-user toilet room floor plans demonstrating that the total square footage between representative layouts complying with the 1991 Standards and the 2010 Standards are comparable. The Department believes the floor plan comparisons clearly show that size differences between the two Standards are not substantial and several of the 2010 Standards-compliant plans do not require additional square footage compared to the 1991 Standards plans. These single-user toilet room floor plans are shown below.

Several commenters concluded that alterations of single-user toilet rooms should be exempt from the requirements of section 604.3 of the 2010 Standards because of the significant reconfiguration and reconstruction that would be required, such as moving plumbing fixtures, walls, and/or doors at significant additional expense. The Department disagrees with this conclusion since it fails to take into account several key points. The 2010 Standards contain provisions for in-swinging doors, 603.2.3, Exception 2, and recessed fixtures adjacent to water closets, 604.5.2, Exception 1. These provisions give flexibility to create more compact room designs and maintain required clearances around fixtures. As with the 1991 Standards, any alterations must comply to the extent that it is technically feasible to do so.

The requirements at section 604.3.2 of the 2010 Standards specify how required clearance around the water closet can overlap with specific elements and spaces. An exception that applies only to covered residential dwelling units permits a lavatory to be located no closer than 18 inches from the centerline of the water closet. The requirements at section 604.3.2 of the 2010 Standards increase accessibility for individuals with disabilities. One commenter expressed concern about other items that might overlap the clear floor space, such as dispensers, shelves, and coat hooks on the side of the water closet where a wheelchair would be positioned for a transfer. Section 604.3.2 of the 2010 Standards allows items such as associated grab bars, dispensers, sanitary napkin disposal units, coat hooks, and shelves to overlap the clear floor space. These are items that typically do not affect the usability of the clear floor space.

Toilet Room Doors. Sections 4.22.2 and 4.22.3 of the 1991 Standards and Section 603.2.3 of the 2010 Standards permit the doors of all toilet or bathing rooms with in-swinging doors to swing into the required turning space, but not into the clear floor space required at any fixture. In single-user toilet rooms or bathing rooms, Section 603.2.3 Exception 2 of the 2010 Standards permits the door to swing into the clear floor space of an accessible fixture if a clear floor space that measures at least 30 inches by 48 inches is provided outside of the door swing.

Several commenters expressed reservations about Exception 2 of Section 603.2.3. Concerns were raised that permitting doors of single-user toilet or bathing rooms with in-swinging doors to swing into the clearance around any fixture will result in inaccessibility to individuals using larger wheelchairs and scooters. Additionally, a commenter stated that the exception would require an unacceptable amount of precision maneuvering by individuals who use standard size wheelchairs. The Department believes that this provision achieves necessary flexibility while providing a minimum standard for maneuvering space. The standard does permit additional maneuvering space to be provided, if needed.

In the NPRM, the Department provided a series of plan drawings illustrating comparisons of the minimum size single-user toilet rooms. These floor plans showed typical examples that met the minimum requirements of the proposed ADA Standards. A commenter was of the opinion that the single-user toilet plans shown in the NPRM demonstrated that the new requirements will not result in a substantial increase in room size. Several other commenters representing industry offered criticisms of the single-user toilet floor plans to support their assertion that a 2010 Standards-compliant single-user toilet room will never be smaller and will likely be larger than such a toilet room required under the 1991 Standards. Commenters also asserted that the floor plans prepared by the Department were of a very basic design which could be accommodated in a minimal sized space whereas the types of facilities their customers demand would require additional space to be added to the rooms shown in the floor plans. The Department recognizes that there are many design choices that can affect the size of a room or space. Choices to install additional features may result in more space being needed to provide sufficient clear floor space for that additional feature to comply. However, many facilities that have these extra features also tend to have ample space to meet accessibility requirements. Other commenters asserted that public single-user toilet rooms always include a closer and a latch on the entry door, requiring a larger clear floor space than shown on the push side of the door shown in Plan 1B. The Department acknowledges that in instances where a latch is provided and a closer is required by other regulations or codes, the minimum size of a room with an out-swinging door may be slightly larger than as shown in Plan 1C.

Additional floor plans of single-user toilet rooms are now included in further response to the commentary received.

Comparison of Single-User Toilet Room Layouts

1991 Standards

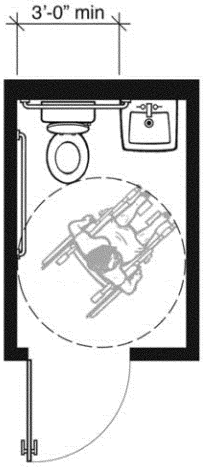

Plan-1A: 1991 Standards Minimum with Out-Swinging Door

5'-0" x 7'-3" • 36.25 Square Feet

This plan shows a typical example of a single-user toilet room that meets the minimum requirements of the 1991 Standards. The size of this space is determined by the minimum width required for the water closet and lavatory between the side walls, the minimum wheelchair turning space, and the space required for the out-swinging door. A lavatory with knee space can overlap the clear floor space required for the water closet provided that at least 36 inches of clearance is maintained between the side wall next to the water closet and the lavatory (see section 4.16.2 and Fig. 28 of the 1991 Standards). A wheelchair turning space meeting section 4.2.3 of the 1991 Standards must be provided. The size of this room requires that the entry door swing out. The room would be larger if the door were in-swinging.

2010 Standards

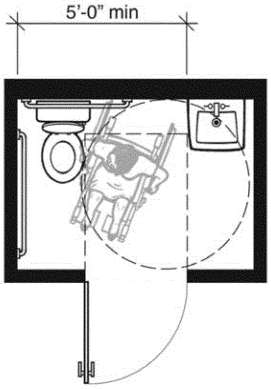

Plan-1B: 2010 Standards Minimum with Out-Swinging Door

7'-0" x 5'-0" • 35.00 Square Feet

This plan shows a typical example of a single-user toilet room that meets the minimum requirements of the 2010 Standards. Features include: five-foot minimum width between the side wall of the water closet and the lavatory; 60-inch minimum circular wheelchair turning space; and 36-inch by 48-inch clear maneuvering space for the out-swinging entry door. Section 604.3.1 of the 2010 Standards requires a floor clearance at a water closet that is a minimum of 60 inches wide by 56 inches deep regardless of approach. Section 604.3.2 prohibits any other plumbing fixtures from being located in this clear space, except in residential dwelling units. The 2010 Standards, at section 304.3, allows the turning space to extend into toe and knee space provided beneath fixtures and other elements. Required maneuvering space for the entry door (inside the room) must be clear of all fixtures. If the door had both a closer and latch, section 404.2.4.1 and Figure 404.2.4.1(c) require additional space on the latch side.

This layout is three point five percent (3.5%) smaller than the accompanying Plan-1A: 1991 Standards Minimum with Out-Swinging Door example.

Comparison of Single-User Toilet Room Layouts

2010 Standards

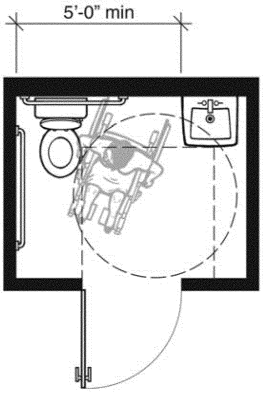

Plan-1C: 2010 Standards Minimum with Out-Swinging Door
(entry door has both closer and latch)

7'-0" x 5'-6" • 38.50 Square Feet

This plan shows the same typical features of a single-user toilet room that meets the minimum requirements of the 2010 Standards as Plan-1B does except the entry door has both a closer and latch. Because the door has both a closer and latch, a minimum additional foot of maneuvering space is required on the latch side (see section 404.2.4.1 and Figure 404.2.4.1(c) of the 2010 Standards).

This layout is six point two percent (6.2%) larger than the accompanying Plan-1A: 1991 Standards Minimum with Out-Swinging Door example.

Comparison of Single-User Toilet Room Layouts

1991 Standards

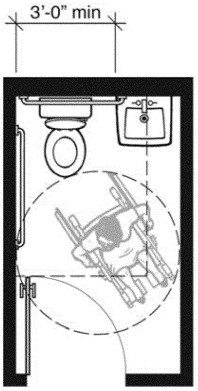

Plan-2A: 1991 Standards Minimum with In-Swinging Door

5'-0" x 8'-6" • 42.50 Square Feet

This plan shows a typical example of a single-user toilet room that meets the minimum requirements of the 1991 Standards. Depending on the width of the hallway and other circulation issues, it can be preferable to swing the entry door into the toilet room. Businesses and public entities typically prefer to have an in-swinging door. The in-swinging door increases overall room size because it cannot swing over the required clear floor space at any accessible fixture, (see section 4.22.2 of the 1991 Standards). This increases the room depth from Plan-1A. The door is permitted to swing over the required turning space shown as a 60-inch circle.

2010 Standards

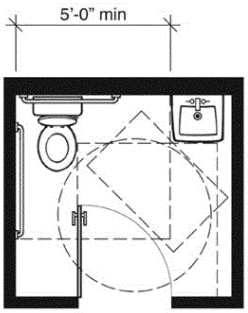

Plan-2B: 2010 Standards Minimum with In-Swinging Door

7'-0" x 6'-6" • 45.50 Square Feet

This plan shows a typical example of a single-user toilet room that meets the minimum requirements of the 2010 Standards when the entry door swings into the room. In the 2010 Standards an exception allows the entry door to swing over the clear floor spaces and clearances required at the fixtures if a clear floor space complying with section 305.3 (minimum 30 inches by 48 inches) is provided outside the arc of the door swing, section 603.3.3 exception 2. The required maneuvering space for the door, section 404.2.4.1 and Figure 404.2.4.1(a), also is a factor in room size. This clear space cannot be obstructed by the plumbing fixtures. Note that this layout provides more space for turning when the door is closed than Plan-1B.

This layout is seven percent (7%) larger than the accompanying Plan-2A: 1991 Standards Minimum with In-Swinging Door example.

Comparison of Single-User Toilet Room Layouts

2010 Standards

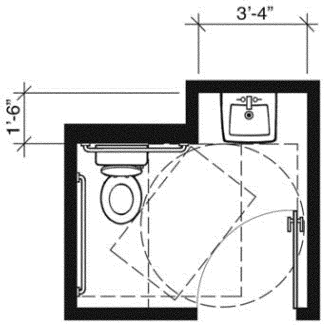

Plan-2C: 2010 Standards Minimum with In-Swinging Door

7'-0" x 6'-6" • 40.00 Square Feet
(plumbing chase not included)

This plan shows the same typical features of a single-user toilet room that meets the minimum requirements of the 2010 Standards as Plan-2B when the entry door swings into the room. Note that this layout also provides more space for turning when the door is closed than Plan-1B.

This layout is six point two five percent (6.25%) smaller than the accompanying Plan-2A: 1991 Standards Minimum with In-Swinging Door example.

Comparison of Single-User Toilet Room Layouts

1991 Standards and 2010 Standards

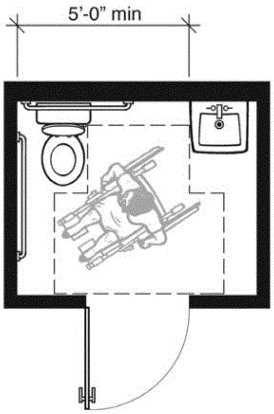

Plan-3: Meets Both 1991 Standards and 2010 Standards

7'-0" x 5'-9" • 40.25 Square Feet

This plan shows an example of a single-user toilet room that meets the minimum requirements of both the 1991 Standards and 2010 Standards. A T-shaped turning space has been used (see Fig. 3(a) of the 1991 Standards and Figure 304.3.2 of the 2010 Standards) to maintain a compact room size. An out-swinging door also minimizes the overall layout depth and cannot swing over the required clear floor space or clearance at any accessible plumbing fixture.

This layout is eleven percent (11%) larger than the Plan-1A: 1991 Standards Minimum with Out-Swinging Door example shown at the beginning of these plan comparisons.

Comparison of Single-User Toilet Room "Pairs" With Fixtures Side-by-Side

1991 Standards

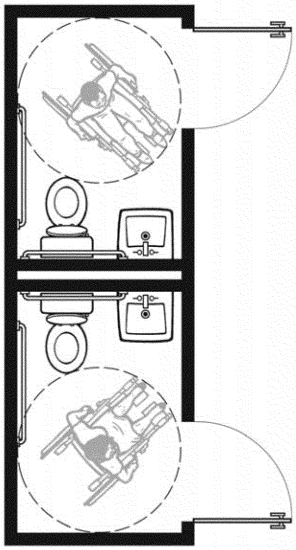

Plan-1A Pair: 1991 Standards with Out-Swinging Doors

Two 5'-0" x 7'-3" Rooms – 72.50 Square Feet Total

2010 Standards

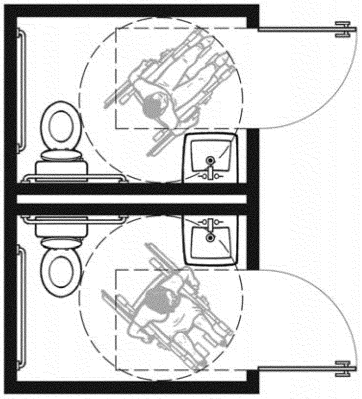

Plan-1B Pair: 2010 Standards with Out-Swinging Doors

Two 7'-0" x 5'-0" Rooms – 70.00 Square Feet Total

These plans show men's/women's room configurations using Plans 1A and 1B.

Comparison of Single-User Toilet Room "Pairs" With Fixtures Side-by-Side

2010 Standards

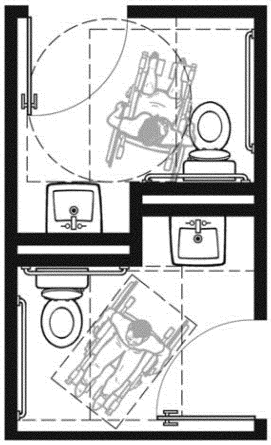

Plan-2C Pair: 2010 Standards with In-Swinging Doors

Two 7'-2" x 6'-6" Rooms - 82.00 Square Feet Total

This plan shows a men's/women's room configuration using Plan 2C.

Toilet Paper Dispensers. The provisions for toilet paper dispensers at section 604.7 of the 2010 Standards require the dispenser to be located seven inches minimum and nine inches maximum in front of the water closet measured to the centerline of the dispenser. The paper outlet of the dispenser must be located 15 inches minimum and 48 inches maximum above the finish floor. In the 1991 Standards the location of the toilet paper dispenser is determined by the centerline and forward edge of the dispenser. In the 2010 Standards

the mounting location of the toilet paper dispenser is determined by the centerline of the dispenser and the location of the outlet for the toilet paper.

One commenter discussed the difficulty of using large roll toilet paper dispensers and dispensers with two standard size rolls stacked on top of each other. The size of the large dispensers can block access to the grab bar and the outlet for the toilet paper can be too low or too high to be usable. Some dispensers also control the delivery of the toilet paper which can make it impossible to get the toilet paper. Toilet paper dispensers that control delivery or do not allow continuous paper flow are not permitted by the 1991 Standards or the 2010 Standards. Also, many of the large roll toilet paper dispensers do not comply with the 2010 Standards since their large size does not allow them to be mounted 12 inches above or 1½ inches below the side grab bar as required by section 609.3.

Shower Spray Controls. In accessible bathtubs and shower compartments, sections 607.6 and 608.6 of the 2010 Standards require shower spray controls to have an on/off control and to deliver water that is 120 °F (49 °C) maximum. Neither feature was required by the 1991 Standards, but may be required by plumbing codes. Delivering water that is no hotter than 120 °F (49 °C) will require controlling the maximum temperature at each accessible shower spray unit.

Shower Compartments. The 1991 Standards at sections 4.21 and 9.1.2 and the 2010 Standards at section 608 contain technical requirements for transfer-type and roll-in shower compartments. The 2010 Standards provide more flexibility than the 1991 Standards as follows:

• Transfer-type showers are exactly 36 inches wide by 36 inches long.

• The 1991 Standards and the 2010 Standards permit a ½-inch maximum curb in transfer-type showers. The 2010 Standards add a new exception that permits a 2-inch maximum curb in transfer-type showers in alterations to existing facilities, where recessing the compartment to achieve a ½-inch curb will disturb the structural reinforcement of the floor slab.

• Roll-in showers are 30 inches wide minimum by 60 inches long minimum. Alternate roll-in showers are 36 inches wide by 60 inches long minimum, and have a 36-inch minimum wide opening on the long side of the compartment. The 1991 Standards require alternate roll-in showers in a portion of accessible transient lodging guest rooms, but provision of this shower type in other facilities is generally permitted as an equivalent facilitation. The 1991 Standards require a seat to be provided adjacent to the opening; and require the controls to be located on the side adjacent to the seat. The 2010 Standards permit alternate roll-in showers to be used in any facility, only require a seat in transient lodging guest rooms, and allow location of controls on the back wall opposite the seat as an alternative.

Commenters raised concerns that adding a new exception that permits a 2-inch maximum curb in transfer-type showers in alterations to existing facilities, where recessing the compartment to achieve a ½-inch curb will disturb the structural reinforcement of the floor slab, will impair the ability of individuals with disabilities to use transfer-type showers.

The exception in section 608.7 of the 2010 Standards permitting a 2-inch maximum curb in transfer-type showers is allowed only in existing facilities where provision of a ½-inch high threshold would disturb the structural reinforcement of the floor slab. Whenever this exception is used the least high threshold that can be used should be provided, up to a maximum height of 2 inches. This exception is intended to provide some flexibility where the existing structure precludes full compliance.

Toilet and Bathing Rooms. Section 213 of the 2010 Standards sets out the scoping requirements for toilet and bathing rooms.

Commenters recommended that section 213, Toilet Facilities and Bathing Facilities, of the 2010 Standards include requirements that unisex toilet and bathing rooms be provided in certain facilities. These commenters suggested that unisex toilet and bathing rooms are most useful as companion care facilities.

Model plumbing and building codes require single-user (unisex or family) toilet facilities in certain occupancies, primarily assembly facilities, covered malls, and transportation facilities. These types of toilet rooms provide flexibility for persons needing privacy so that they can obtain assistance from family members or persons of the opposite sex. When these facilities are provided, both the 1991 Standards and 2010 Standards require that they be accessible. The 2010 Standards do not scope unisex toilet facilities because plumbing codes generally determine the number and type of plumbing fixtures to be provided in a particular occupancy and often determine whether an occupancy must provide separate sex facilities in addition to single-user facilities. However, the scoping at section 213.2.1 of the 2010 Standards coordinates with model plumbing and building code requirements which will permit a small toilet room with two water closets or one water closet and one urinal to be considered a single-user toilet room provided that the room has a privacy latch. In this way, a person needing assistance from a person of the opposite sex can lock the door to use the facility while temporarily inconveniencing only one other potential user. These provisions strike a reasonable balance and impose less impact on covered entities.

A commenter recommended that in shower compartments rectangular seats as provided in section 610.3.1 of the 2010 Standards should not be permitted as a substitute for L-shaped seats as provided in 610.3.2.

The 2010 Standards do not indicate a preference for either rectangular or L-shaped seats in shower compartments. L-shaped seats in transfer and certain roll-in showers have been used for many years to provide users with poor balance additional support because they can position themselves in the corner while showering.

214 and 611 Washing Machines and Clothes Dryers

Sections 214.2 (washing machines) and 214.3 (clothes dryers) of the 2010 Standards specify the number of each type of these machines required to be accessible (one to two depending upon the total number of machines provided) and section 611 specifies the technical requirements. An exception will permit the maximum height for the tops of these machines to be 2 inches higher than the general requirement for maximum high reach over an obstruction.

A commenter objected to the scoping provision for accessible washing machines and clothes dryers stating that the probability is low that more than one accessible machine would be needed at the same time in the laundry facility of a place of transient lodging.

The scoping in this provision is based on the relative size of the facility. The Department assumes that the size of the facility (and, therefore, the number of accessible machines provided) will be determined by the covered entity's assessment of the demand for laundry facilities. The Department declines to assume that persons with disabilities will have less use for accessible facilities in transient lodging than in other public accommodations.

216 and 703 Signs

The following types of signs, though they are not specifically subject to the 1991 Standards requirement for signs, will now be explicitly exempted by sections 216 and 703 of the 2010 Standards. These types of signs include: seat and row designations in assembly areas; occupant names, building addresses; company names and logos; signs in parking facilities (except those identifying accessible parking spaces and means of egress); and exterior signs identifying permanent rooms and spaces that are not located at the door to the space they serve. This requirement also clarifies that the exception for temporary signs applies to signs used for seven days or less.

The 2010 Standards retain the option to provide one sign where both visual and tactile characters are provided or two signs, one with visual, and one with tactile characters.

217 and 704 Telephones

Drive-up Public Telephones. Where public telephones are provided, the 1991 Standards, at section 4.1.3(17)(a), and section 217.2 of the 2010 Standards, require a certain number of telephones to be wheelchair accessible. The 2010 Standards add a new exception that exempts drive-up public telephones.

Text Telephones (TTY). Section 4.1.3(17) of the 1991 Standards requires a public TTY to be provided if there are four or more public pay telephones at a site and at least one is in an interior location. Section 217.4.2 of the 2010 Standards requires that a building or facility provide a public TTY on each floor that has four or more public telephones, and in each telephone bank that has four or more telephones. Additionally, section 217.4.4 of the 2010 Standards requires that at least one public TTY be installed where four or more public pay telephones are provided on an exterior site. Section 217.4.5 of the 2010 Standards also requires that a public TTY be provided where at least one public pay telephone is provided at a public rest stop, emergency roadside stop, or service plaza. Section 217.4.6 of the 2010 Standards also requires that a public TTY be provided at each location where at least one public pay telephone is provided serving a hospital emergency room, a hospital recovery room, or a hospital waiting room. Section 217.4.7 of the 2010 Standards also requires that, in addition to the requirements for a public TTY to be provided at each location where at least four or more public pay telephones are provided at a bank of pay telephones and where at least one public pay telephone is provided on a floor or in a public building, where at least one public pay telephone serves a particular entrance to a bus or rail facility at least one public TTY must serve that entrance. In airports, in addition to the requirements for the provision of a public TTY at phone banks, on floors, and in public buildings with pay phones, where four or more public pay phones are located in a terminal outside the security areas, in a concourse within the security areas, or a baggage claim area in a terminal at least one public TTY must be provided. Section 217.4.8 of the 2010 Standards also requires that a TTY be provided in at least one secured area where at least one pay telephone is provided in a secured area used only by detainees or inmates and security personnel in detention and correctional facilities.

Wheelchair Accessible Telephones

Section 217.2 of the 2010 Standards requires that where public telephones are provided wheelchair accessible telephones complying

with section 704.2 must be provided in accordance with Table 217.2.

A commenter stated that requiring installation of telephones within the proposed reach range requirements would adversely impact public and telephone owners and operators. According to the commenter, individuals without disabilities will not use telephones that are installed within the reach range requirements because they may be inconvenienced by having to stoop to operate these telephones, and, therefore, owners and operators will lose revenue due to less use of public telephones.

This comment misunderstands the scoping requirements for wheelchair accessible telephones. Section 217.2 of the 2010 Standards provides that where one or more single units are provided, only one unit per floor, level, or exterior site is required to be wheelchair accessible. However, where banks of telephones are provided, only one telephone in each bank is required to be wheelchair accessible. The Department believes these scoping requirements for wheelchair accessible telephones are reasonable and will not result in burdensome obligations or lost revenue for owners and operators.

218 and 810 Transportation Facilities

Detectable Warnings. Detectable warnings provide a distinctively textured surface of truncated domes. The 1991 Standards at sections 4.1.3(15), 4.7.7, 4.29.2, 4.29.5, 4.29.6, and 10.3.1(8) require detectable warnings at curb ramps, hazardous vehicular areas, reflecting pools, and transit platform edges. The 2010 Standards at sections 218, 810.5, 705.1, and 705.2 only require detectable warnings at transit platform edges. The technical specifications for the diameter and spacing of the truncated domes have also been changed. The 2010 Standards also delete the requirement for the material used to contrast in resiliency or sound-on-cane contact from adjoining walking surfaces at interior locations.

The 2010 Standards apply to detectable warnings on developed sites. They do not apply to the public right-of-way. Scoping for detectable warnings at all locations other than transit platform edges has been eliminated from the 2010 Standards. However, because detectable warnings have been shown to significantly benefit individuals with disabilities at transit platform edges, the 2010 Standards provide scoping and technical requirements for detectable warnings at transit platform edges.

219 and 706 Assistive Listening Systems

Signs. Section 216.10 of the 2010 Standards requires each covered assembly area to provide signs at each auditorium to inform patrons that assistive listening systems are available. However, an exception to this requirement permits assembly areas that have ticket offices or ticket windows to display the required signs at the ticket window.

A commenter recommended eliminating the exception at 216.10 because, for example, people who buy tickets through the mail, by subscription, or on-line may not need to stop at a ticket office or window upon arrival at the assembly area. The Department believes that an individual's decision to purchase tickets before arriving at a performance does not limit the discretion of the assembly operator to use the ticket window to provide other services to its patrons. The Department retained the exception at 216.10 to permit the venue operator some flexibility in determining how to meet the needs of its patrons.

Audible Communication. The 1991 Standards, at section 4.1.3(19)(b), require assembly areas, where audible communication is integral to the use of the space, to provide an assistive listening system if they have an audio amplification system or an occupant load of 50 or more people and have fixed seating. The 2010 Standards at section 219 require assistive listening systems in spaces where communication is integral to the space and audio amplification is provided and in courtrooms.

The 1991 Standards require receivers to be provided for at least four percent (4%) of the total number of fixed seats. The 2010 Standards, at section 219.3, revise the percentage of receivers required according to a table that correlates the required number of receivers to the seating capacity of the facility. Small facilities will continue to provide receivers for four percent (4%) of the seats. The required percentage declines as the size of the facility increases. The changes also require at least twenty-five percent (25%), but no fewer than two, of the receivers to be hearing-aid compatible. Assembly areas served by an induction loop assistive listening system will not have to provide hearing-aid compatible receivers.

Commenters were divided in their opinion of this change. The Department believes that the reduction in the required number of assistive listening systems for larger assembly areas will meet the needs of individuals with disabilities. The new requirement to provide hearing-aid compatible receivers should make assistive listening systems more usable for people who have been underserved until now.

Concerns were raised that the requirement to provide assistive listening systems may have an adverse impact on restaurants. This comment misunderstands the scope of coverage. The 2010 Standards define the term ''assembly area'' to include facilities used for entertainment, educational, or civic gatherings. A restaurant would fall within

this category only if it is presenting programs to educate or entertain diners, and it provides an audio amplification system.

Same Management or Building. The 2010 Standards add a new exception that allows multiple assembly areas that are in the same building and under the same management, such as theaters in a multiplex cinema and lecture halls in a college building, to calculate the number of receivers required based on the total number of seats in all the assembly areas, instead of each assembly area separately, where the receivers are compatible with the assistive listening systems used in each of the assembly areas.

Mono Jacks, Sound Pressure, Etc. Section 4.33.7 of the 1991 Standards does not contain specific technical requirements for assistive listening systems. The 2010 Standards at section 706 require assistive listening systems to have standard mono jacks and will require hearing-aid compatible receivers to have neck loops to interface with telecoils in hearing aids. The 2010 Standards also specify sound pressure level, signal-to-noise ratio, and peak clipping level. Currently available assistive listening systems typically meet these technical requirements.

220 and 707 Automatic Teller Machines and Fare Machines

Section 707 of the 2010 Standards adds specific technical requirements for speech output, privacy, tactilely-discernible input controls, display screens, and Braille instructions to the general accessibility requirements set out in the 1991 Standards. Machines shall be speech enabled and exceptions are provided that cover when audible tones are permitted, when advertisements or similar information are provided, and where speech synthesis cannot be supported. The 1991 Standards require these machines to be accessible to and independently usable by persons with visual impairments, but do not contain any technical specifications.

221 Assembly Areas

Wheelchair Spaces/Companion Seats. Owners of large assembly areas have historically complained to the Department that the requirement for one percent (1%) of seating to be wheelchair seating is excessive and that wheelchair seats are not being sold. At the same time, advocates have traditionally argued that persons who use wheelchairs will increasingly participate in activities at assembly areas once they become accessible and that at least one percent (1%) of seats should be accessible.

The 1991 Standards, at sections 4.1.3(19)(a) and 4.33.3, require assembly areas to provide wheelchair and companion seats. In assembly areas with a capacity of more than five hundred seats, accessible seating at a ratio of one percent (1%) (plus one seat) of the number of traditional fixed seats must be provided. The 2010 Standards, at section 221.2, require assembly areas with 501 to 5000 seats to provide at least six wheelchair spaces and companion seats plus one additional wheelchair space for each additional 150 seats (or fraction thereof) between 501 through 5000. In assembly areas with more than 5000 seats at least 36 wheelchair spaces and companion seats plus one additional wheelchair space for each 200 seats (or fraction thereof) more than 5000 are required. See sections 221.1 and 221.2 of the 2010 Standards.

Commenters questioned why scoping requirements for large assembly areas are being reduced. During the development of the 2004 ADAAG, industry providers, particularly those representing larger stadium-style assembly areas, supplied data to the Access Board demonstrating the current scoping requirements for large assembly areas often exceed the demand. Based on the data provided to the Access Board, the Department believes the reduced scoping requirements will adequately meet the needs of individuals with disabilities, while balancing concerns of the industry.

Commenters representing assembly areas supported the reduced scoping. One commenter asked that scoping requirements for larger assembly areas be reduced even further. Although the commenter referenced data demonstrating that wheelchair spaces in larger facilities with seating capacities of 70,000 or more may not be used by individuals with disabilities, the data was not based on actual results, but was calculated at least in part based on probability assumptions. The Department is not convinced that further reductions should be made based upon those projections and that further reductions would not substantially limit accessibility at assembly areas for persons who use wheelchairs.

Section 221.2.1.3 of the 2010 Standards clarifies that the scoping requirements for wheelchair spaces and companion seats are to be applied separately to general seating areas and to each luxury box, club box, and suite in arenas, stadiums, and grandstands. In assembly areas other than arenas, stadiums, and grandstands, the scoping requirements will not be applied separately. Thus, in performing arts facilities with tiered boxes designed for spatial and acoustical purposes, the scoping requirement is to be applied to the seats in the tiered boxes. The requisite number of wheelchair spaces and companion seats required in the tiered boxes are to be dispersed among at least twenty percent (20%) of the tiered boxes. For example, if a performing arts facility has 20 tiered boxes with 10 fixed seats in each box, for a total of 200 seats, at least five wheelchair spaces and companion seats must be provided in the

boxes, and they must be dispersed among at least four of the 20 boxes.

Commenters raised concerns that the 2010 Standards should clarify requirements for scoping of seating areas and that requiring accessible seating in each luxury box, club box, and suite in arenas, stadiums and grandstands could result in no wheelchair and companion spaces available for individuals with disabilities in the general seating area(s). These comments appear to misunderstand the requirements. The 2010 Standards require each luxury box, club box, and suite in an arena, stadium or grandstand to be accessible and to contain wheelchair spaces and companion seats as required by sections 221.2.1.1, 221.2.1.2 and 221.3. In addition, the remaining seating areas not located in boxes must also contain the number of wheelchair and companion seating locations specified in the 2010 Standards based on the total number of seats in the entire facility excluding luxury boxes, club boxes and suites.

Wheelchair Space Overlap in Assembly Areas. Section 4.33.3 of the 1991 Standards and the 2010 Standards, at sections 402, 403.5.1, 802.1.4, and 802.1.5, require walkways that are part of an accessible route to have a 36-inch minimum clear width. Section 802.1.5 of the 2010 Standards specifically prohibits accessible routes from overlapping wheelchair spaces. This change is consistent with the technical requirements for accessible routes, since the clear width of accessible routes cannot be obstructed by any object. The 2010 Standards also specifically prohibit wheelchair spaces from overlapping circulation paths. An advisory note clarifies that this prohibition applies only to the circulation path width required by applicable building codes and fire and life safety codes since the codes prohibit obstructions in the required width of assembly aisles.

Section 802.1.5 of the 2010 Standards provides that where a main circulation path is located in front of a row of seats that contains a wheelchair space and the circulation path is wider than required by applicable building codes and fire and life safety codes, the wheelchair space may overlap the ''extra'' circulation path width. Where a main circulation path is located behind a row of seats that contains a wheelchair space and the wheelchair space is entered from the rear, the aisle in front of the row may need to be wider in order not to block the required circulation path to the other seats in the row, or a mid-row opening may need to be provided to access the required circulation path to the other seats.

Line of Sight and Dispersion of Wheelchair Spaces in Assembly Areas. Section 4.33.3 of the 1991 Standards requires wheelchair spaces and companion seats to be an integral part of any fixed seating plan in assembly areas and to provide individuals with disabilities a choice of admission prices and lines of sight comparable to those available to other spectators. Section 4.33.3 also requires wheelchair spaces and companion seats to be dispersed in assembly areas with more than 300 seats. Under the 1991 Standards, sports facilities typically located some wheelchair spaces and companion seats on each accessible level of the facility. In 1994, the Department issued official guidance interpreting the requirement for comparable lines of sight in the 1991 Standards to mean wheelchair spaces and companion seats in sports stadia and arenas must provide patrons with disabilities and their companions with lines of sight over standing spectators to the playing field or performance area, where spectators were expected to stand during events. See ''Accessible Stadiums,'' www.ada.gov/stadium.pdf. The Department also interpreted the section 4.33.3 comparable lines of sight requirement to mean that wheelchair spaces and companion seats in stadium-style movie theaters must provide patrons with disabilities and their companions with viewing angles comparable to those provided to other spectators.

Sections 221.2.3 and 802.2 of the 2010 Standards add specific technical requirements for providing lines of sight over seated and standing spectators and also require wheelchair spaces and companion seats (per section 221.3) to provide individuals with disabilities choices of seating locations and viewing angles that are substantially equivalent to, or better than, the choices of seating locations and viewing angles available to other spectators. This applies to all types of assembly areas, including stadium-style movie theaters, sports arenas, and concert halls. These rules are expected to have minimal impact since they are consistent with the Department's longstanding interpretation of the 1991 Standards and technical assistance.

Commenters stated that the qualitative viewing angle language contained in section 221.2.3 is not appropriate for an enforceable regulatory standard unless the terms of such language are defined. Other commenters requested definitions for viewing angles, an explanation for precisely how viewing angles are measured, and an explanation for precisely how to evaluate whether one viewing angle is better than another viewing angle. The Department is convinced that the regulatory language in the 2010 Standards is sufficient to provide a performance-based standard for designers, architects, and other professionals to design facilities that provide comparable lines of sight for wheelchair seating in assembly areas, including viewing angles. The Department believes that as a general rule, the vast variety of sizes and configurations in assembly areas requires it

to establish a performance standard for designers to adapt to the specific circumstances of the venue that is being designed. The Department has implemented more explicit requirements for stadium-style movie theaters in 28 CFR 36.406(f) and 35.151(g) of the final regulations based on experience and expertise gained after several major enforcement actions.

Another commenter inquired as to what determines whether a choice of seating locations or viewing angles is better than that available to all other spectators. The answer to this question varies according to each assembly area that is being designed, but designers and venue operators understand which seats are better and that understanding routinely drives design choices made to maximize profit and successful operation of the facility, among other things. For example, an ''equivalent or better'' line of sight in a major league football stadium would be different than for a 350-seat lecture hall. This performance standard is based upon the underlying principle of equal opportunity for a good viewing experience for everyone, including persons with disabilities. The Department believes that for each specific facility that is designed, the owner, operator, and design professionals will be able to distinguish easily between seating locations and the quality of the associated lines of sight from those seating locations in order to decide which ones are better than others. The wheelchair locations do not have to be exclusively among the seats with the very best lines of sight nor may they be exclusively among the seats with the worst lines of sight. Rather, wheelchair seating locations should offer a choice of viewing experiences and be located among the seats where most of the audience chooses to sit.

Section 4.33.3 of the 1991 Standards requires wheelchair spaces and companion seating to be offered at a choice of admission prices, but section 221.2.3.2 of the 2010 Standards no longer requires wheelchair spaces and companion seats to be dispersed based on admission prices. Venue owners and operators commented during the 2004 ADAAG rulemaking process that pricing is not always established at the design phase and may vary from event to event within the same facility, making it difficult to determine where to place wheelchair seats during the design and construction phase. Their concern was that a failure by the venue owner or operator to provide a choice of ticket prices for wheelchair seating as required by the 1991 Standards governing new construction could somehow unfairly subject parties involved in the design and construction to liability unknowingly.

Sections 221.2.3.2 and 221.3 of the 2010 Standards require wheelchair spaces and companion seats to be vertically dispersed at varying distances from the screen, performance area, or playing field. The 2010 Standards, at section 221.2.3.2, also require wheelchair spaces and companion seats to be located in each balcony or mezzanine served by an accessible route. The final regulations at 28 CFR 35.151(g)(1) and 36.406(f)(1) also require assembly areas to locate wheelchair spaces and companion seats at all levels of the facility that include seating and that are served by an accessible route. The Department interprets that requirement to mean that wheelchair and companion seating must be provided in a particular area even if the accessible route may not be the same route that other individuals use to reach their seats. For example, if other patrons reach their seats on the field by an inaccessible route (e.g., by stairs), but there is an accessible route that complies with section 206.3 that could be connected to seats on the field, accessible seats must be placed on the field even if that route is not generally available to the public. The 2010 Standards, at section 221.2.3.2, provide an exception for vertical dispersion in assembly areas with 300 or fewer seats if the wheelchair spaces and companion seats provide viewing angles that are equivalent to, or better than, the average viewing angle provided in the facility.

Section 221.3 of the 2010 Standards requires wheelchair spaces and companion seats to be dispersed horizontally. In addition, 28 CFR 35.151(g)(2) and 36.406(f)(2) require assembly areas that have seating around the field of play or performance area to place wheelchair spaces and companion seating all around that field of play or performance area.

Stadium-Style Movie Theaters

Pursuant to 28 CFR 35.151(g) and 36.406(f), in addition to other obligations, stadium-style movie theaters must meet horizontal and vertical dispersion requirements set forth in sections 221.2.3.1 and 221.2.3.2 of the 2010 Standards; placement of wheelchair and companion seating must be on a riser or cross-aisle in the stadium section of the theater; and placement of such seating must satisfy at least one of the following criteria: (i) It is located within the rear sixty percent (60%) of the seats provided in the auditorium; or (ii) it is located within the area of the auditorium where the vertical viewing angles are between the 40th and 100th percentile of vertical viewing angles for all seats in that theater as ranked from the first row (1st percentile) to the back row (100th percentile). The line-of-sight requirements recognize the importance to the movie-going experience of viewing angles, and the final regulations ensure that movie patrons with disabilities are provided views of the movie screen comparable to other theater patrons. Some commenters supported regulatory language that would require stadium-style theaters to meet standards of accessibility equal

to those of non-stadium-style theaters, with larger theaters being required to provide accessible seating locations and viewing angles equal to those offered to individuals without disabilities.

One commenter noted that stadium-style movie theaters, sports arenas, music venues, theaters, and concert halls each pose unique conditions that require separate and specific standards to accommodate patrons with disabilities, and recommended that the Department provide more specific requirements for sports arenas, music venues, theaters, and concert halls. The Department has concluded that the 2010 Standards will provide sufficient flexibility to adapt to the wide variety of assembly venues covered.

Companion Seats. Section 4.33.3 of the 1991 Standards required at least one fixed companion seat to be provided next to each wheelchair space. The 2010 Standards at sections 221.3 and 802.3 permit companion seats to be movable. Several commenters urged the Department to ensure that companion seats are positioned in a manner that places the user at the same shoulder height as their companions using mobility devices. The Department recognizes that some facilities have created problems by locating the wheelchair space and companion seat on different floor elevations (often a difference of one riser height). Section 802.3.1 of the 2010 Standards addresses this problem by requiring the wheelchair space and the companion seat to be on the same floor elevation. This solution should prevent any vertical discrepancies that are not the direct result of differences in the sizes and configurations of wheelchairs.

Designated Aisle Seats. Section 4.1.3(19)(a) of the 1991 Standards requires one percent (1%) of fixed seats in assembly areas to be designated aisle seats with either no armrests or folding or retractable armrests on the aisle side of the seat. The 2010 Standards, at sections 221.4 and 802.4, base the number of required designated aisle seats on the total number of aisle seats, instead of on all of the seats in an assembly area as the 1991 Standards require. At least five percent (5%) of the aisle seats are required to be designated aisle seats and to be located closest to accessible routes. This option will almost always result in fewer aisle seats being designated aisle seats compared to the 1991 Standards. The Department is aware that sports facilities typically locate designated aisle seats on, or as near to, accessible routes as permitted by the configuration of the facility.

One commenter recommended that section 221.4, Designated Aisle Seats, be changed to require that aisle seats be on an accessible route, and be integrated and dispersed throughout an assembly area. Aisle seats, by their nature, typically are located within the general seating area, and integration occurs almost automatically. The issue of dispersing aisle seats or locating them on accessible routes is much more challenging. During the separate rulemaking on the 2004 ADAAG the Access Board specifically requested public comment on the question of whether aisle seats should be required to be located on accessible routes. After reviewing the comments submitted during the 2004 Access Board rulemaking, the Access Board concluded that this could not be done without making significant and costly changes in the design of most assembly areas. However, section 221.4 of the 2004 ADAAG required that designated aisle seats be the aisle seats closest to accessible routes. The Department proposed the same provision and concurs in the Access Board's conclusion and declines to implement further changes.

Team or Player Seating Areas. Section 221.2.1.4 of the 2010 Standards requires that at least one wheelchair space compliant with section 802.1 be provided in each team or player seating area serving areas of sport activity. For bowling lanes, the requirement for a wheelchair space in player seating areas is limited to lanes required to be accessible.

Lawn Seating. The 1991 Standards, at section 4.1.1(1), require all areas of newly constructed facilities to be accessible, but do not contain a specific scoping requirement for lawn seating in assembly areas. The 2010 Standards, at section 221.5, specifically require lawn seating areas and exterior overflow seating areas without fixed seats to connect to an accessible route.

Aisle Stairs and Ramps in Assembly Areas. Sections 4.1.3 and 4.1.3(4) of the 1991 Standards require that interior and exterior stairs connecting levels that are not connected by an elevator, ramp, or other accessible means of vertical access must comply with the technical requirements for stairs set out in section 4.9 of the 1991 Standards. Section 210.1 of the 2010 Standards requires that stairs that are part of a means of egress shall comply with section 504's technical requirements for stairs. The 1991 Standards do not contain any exceptions for aisle stairs in assembly areas. Section 210.1, Exception 3 of the 2010 Standards adds a new exception that exempts aisle stairs in assembly areas from section 504's technical requirements for stairs, including section 505's technical requirements for handrails.

Section 4.8.5 of the 1991 Standards exempts aisle ramps that are part of an accessible route from providing handrails on the side adjacent to seating. The 2010 Standards, at section 405.1, exempt aisle ramps adjacent to seating in assembly areas and not serving elements required to be on an accessible route, from complying with all of section 405's technical requirements for ramps. Where aisle ramps in assembly areas serve elements required to be on an accessible route, the 2010 Standards require that the

aisle ramps comply with section 405's technical requirements for ramps. Sections 505.2 and 505.3 of the 2010 Standards provide exceptions for aisle ramp handrails. Section 505.2 states that in assembly areas, a handrail may be provided at either side or within the aisle width when handrails are not provided on both sides of aisle ramps. Section 505.3 states that, in assembly areas, handrails need not be continuous in aisles serving seating.

222 and 803 Dressing, Fitting, and Locker Rooms

Dressing rooms, fitting rooms, and locker rooms are required to comply with the accessibility requirements of sections 222 and 803 of the 2010 Standards. Where these types of rooms are provided in clusters, five percent (5%) but at least one room in each cluster must comply. Some commenters stated that clothing and retail stores would have to expand and reconfigure accessible dressing, fitting and locker rooms to meet the changed provision for clear floor space alongside the end of the bench. Commenters explained that meeting the new requirement would result in a loss of sales and inventory space. Other commenters also expressed opposition to the changed requirement in locker rooms for similar reasons.

The Department reminds the commenters that the requirements in the 2010 Standards for the clear floor space to be beside the short axis of the bench in an accessible dressing, fitting, or locker room apply only to new construction and alterations. The requirements for alterations in the 2010 Standards at section 202.3 do not include the requirement from the 1991 Standards at section 4.1.6(1)(c) that if alterations to single elements, when considered together, amount to an alteration of a room or space in a building or facility, the entire space shall be made accessible. Therefore, under the 2010 Standards, the alteration requirements only apply to specific elements or spaces that are being altered. So providing the clear floor space at the end of the bench as required by the 2010 Standards instead of in front of the bench as is allowed by the 1991 Standards would only be required when the bench in the accessible dressing room is altered or when the entire dressing room area is altered.

224 and 806 Transient Lodging Guest Rooms

Scoping. The minimum number of guest rooms required to be accessible in transient lodging facilities is covered by section 224 of the 2010 Standards. Scoping requirements for guest rooms with mobility features and guest rooms with communication features are addressed at section 224.2 and section 224.4, respectively. Under the 1991 Standards all newly constructed guest rooms with mobility features must provide communication features. Under the 2010 Standards, in section 224.5, at least one guest room with mobility features must also provide communication features. Additionally, not more than ten percent (10%) of the guest rooms required to provide mobility features and also equipped with communication features can be used to satisfy the minimum number of guest rooms required to provide communication features.

Some commenters opposed requirements for guest rooms accessible to individuals with mobility disabilities stating that statistics provided by the industry demonstrate that all types of accessible guest rooms are unused. They further claimed that the requirements of the 2010 Standards are too burdensome to meet in new construction, and that the requirements will result in a loss of living space in places of transient lodging. Other commenters urged the Department to increase the number of guest rooms required to be accessible. The number of guest rooms accessible to individuals with mobility disabilities and the number accessible to persons who are deaf or who are hard of hearing in the 2010 Standards are consistent with the 1991 Standards and with the IBC. The Department continues to receive complaints about the lack of accessible guest rooms throughout the country. Accessible guest rooms are used not only by individuals using mobility devices such as wheelchairs and scooters, but also by individuals with other mobility disabilities including persons who use walkers, crutches, or canes.

Data provided by the Disability Statistics Center at the University of California, San Francisco demonstrated that the number of adults who use wheelchairs has been increasing at the rate of six percent (6%) per year from 1969 to 1999; and by 2010, it was projected that two percent (2%) of the adult population would use wheelchairs. In addition to persons who use wheelchairs, three percent (3%) of adults used crutches, canes, walkers, and other mobility devices in 1999; and the number was projected to increase to four percent (4%) by 2010. Thus, in 2010, up to six percent (6%) of the population may need accessible guest rooms.

Dispersion. The 2010 Standards, in section 224.5, set scoping requirements for dispersion in facilities covered by the transient lodging provisions. This section covers guest rooms with mobility features and guest rooms with communication features and applies in new construction and alterations. The primary requirement is to provide choices of types of guest rooms, number of beds, and other amenities comparable to the choices provided to other guests. An advisory in section 224.5 provides guidance that ''factors to be considered in providing an equivalent range of options may include, but are not limited to, room size, bed size, cost, view, bathroom fixtures such as hot tubs and spas, smoking

and nonsmoking, and the number of rooms provided.''

Commenters asked the Department to clarify what is meant by various terms used in section 224.5 such as ''classes,'' ''types,'' ''options,'' and ''amenities.'' Other commenters asked the Department to clarify and simplify the dispersion requirements set forth in section 224.5 of the 2010 Standards, in particular the scope of the term ''amenities.'' One commenter expressed concern that views, if considered an amenity, would further complicate room categories and force owners and operators to make an educated guess. Other commenters stated that views should only be a dispersion criteria if view is a factor for pricing room rates.

These terms are not to be considered terms of art, but should be used as in their normal course. For example, ''class'' is defined by Webster's Dictionary as ''a division by quality.'' ''Type'' is defined as ''a group of * * * things that share common traits or characteristics distinguishing them as an identifiable group or class.'' Accordingly, these terms are not intended to convey different concepts, but are used as synonyms. In the 2010 Standards, section 224.5 and its advisory require dispersion in such a varied range of hotels and lodging facilities that the Department believes that the chosen terms are appropriate to convey what is intended. Dispersion required by this section is not ''one size fits all'' and it is imperative that each covered entity consider its individual circumstance as it applies this requirement. For example, a facility would consider view as an amenity if some rooms faced mountains, a beach, a lake, or other scenery that was considered to be a premium. A facility where view was not marketed or requested by guests would not factor the view as an amenity for purposes of meeting the dispersion requirement.

Section 224.5 of the 2010 Standards requires that guest rooms with mobility features and guest rooms with communication features ''shall be dispersed among the various classes of guest rooms, and shall provide choices of types of guest rooms, number of beds, and other amenities comparable to the choices provided to other guests. When the minimum number of guest rooms required is not sufficient to allow for complete dispersion, guest rooms shall be dispersed in the following priority: guest room type, number of beds and amenities.''

This general dispersion requirement is intended to effectuate Congress' directive that a percentage of each class of hotel rooms is to be fully accessible to persons with disabilities. See H.R. Rep. No. 101–485 (II) at 391. Accordingly, the promise of the ADA in this instance is that persons with disabilities will have an equal opportunity to benefit from the various options available to hotel guests without disabilities, from single occupancy guest rooms with limited features (and accompanying limited price tags) to luxury suites with lavish features and choices. The inclusion of section 224.5 of the 2010 Standards is not new. Substantially similar language is contained in section 9.1.4 of the 1991 Standards.

Commenters raised concerns that the factors included in the advisory to section 224.5 of the 2010 Standards have been expanded. The advisory provides: ''[f]actors to be considered in providing an equivalent range of options may include, but are not limited to, room size, bed size, cost, view, bathroom fixtures such as hot tubs and spas, smoking and nonsmoking, and the number of rooms provided.''

As previously discussed, the advisory materials provided in the 2010 Standards are meant to be illustrative and do not set out specific requirements. In this particular instance, the advisory materials for section 224.5 set out some of the common types of amenities found at transient lodging facilities, and include common sense concepts such as view, bathroom fixtures, and smoking status. The intention of these factors is to indicate to the hospitality industry the sorts of considerations that the Department, in its enforcement efforts since the enactment of the ADA, has considered as amenities that should be made available to persons with disabilities, just as they are made available to guests without disabilities.

Commenters offered several suggestions for addressing dispersion. One option included the flexibility to use an equivalent facilitation option similar to that provided in section 9.1.4(2) of the 1991 Standards.

The 2010 Standards eliminated all specific references to equivalent facilitation. Since Congress made it clear that each class of hotel room is to be available to individuals with disabilities, the Department declines to adopt such a specific limitation in favor of the specific requirement for new construction and alterations found in section 224.5 of the 2010 Standards.

In considering the comments of the hospitality industry from the ANPRM and the Department's enforcement efforts in this area, the Department sought comment in the NPRM on whether the dispersion requirements should be applied proportionally, or whether the requirements of section 224.5 of the 2010 Standards would be complied with if access to at least one guest room of each type were to be provided.

One commenter expressed concern about requiring different guest room types to be proportionally represented in the accessible guest room pool as opposed to just having each type represented. Some commenters also expressed concern about accessible guest rooms created in pre-1993 facilities and they requested that such accessible guest rooms be safe harbored just as they are safe

harbored under the 1991 Standards. In addition, one commenter requested that the proposed dispersion requirements in section 224.5 of the 2010 Standards not be applied to pre-1993 facilities even when they are altered. Some commenters also offered a suggestion for limitations to the dispersion requirements as an alternative to safe harboring pre-1993 facilities. The suggestion included: (1) Guest rooms' interior or exterior footprints may remain unchanged in order to meet the dispersion requirements; (2) Dispersion should only be required among the types of rooms affected by an alteration; and (3) Subject to (1) and (2) above and technical feasibility, a facility would need to provide only one guest room in each guest room type such as single, double and suites. One commenter requested an exception to the dispersion criteria that applies to both existing and new multi-story timeshare facilities. This requested exception waives dispersion based on views to the extent that up to eight units may be vertically stacked in a single location.

Section 224.1.1 of the 2010 Standards sets scoping requirements for alterations to transient lodging guest rooms. The advisory to section 224.1.1 further explains that compliance with 224.5 is more likely to be achieved if all of the accessible guest rooms are not provided in the same area of the facility, when accessible guest rooms are added as a result of subsequent alterations.

Some commenters requested a specific exemption for small hotels of 300 or fewer guest rooms from dispersion regarding smoking rooms. The ADA requires that individuals with disabilities be provided with the same range of options as persons without disabilities, and, therefore, the Department declines to add such an exemption. It is noted, however, that the existence of this language in the advisory does not require a place of transient lodging that does not offer smoking guest rooms at its facility to do so only for individuals with disabilities.

Guest Rooms with Mobility Features. Scoping provisions for guest rooms with mobility features are provided in section 224.2 of the 2010 Standards. Scoping requirements for alterations are included in 224.1.1. These scoping requirements in the 2010 Standards are consistent with the 1991 Standards.

One commenter expressed opposition to the new scoping provisions for altered guest rooms, which, according to the commenter, require greater numbers of accessible guest rooms with mobility features.

Section 224.1.1 of the 2010 Standards provides scoping requirements for alterations to guest rooms in existing facilities. Section 224.1.1 modifies the scoping requirements for new construction in section 224 by limiting the application of section 224 requirements only to those guest rooms being altered or added until the number of such accessible guest rooms complies with the minimum number required for new construction in section 224.2 of the 2010 Standards. The minimum required number of accessible guest rooms is based on the total number of guest rooms altered or added instead of the total number of guest rooms provided. These requirements are consistent with the requirements in the 1991 Standards. Language in the 2010 Standards clarifies the provision of section 104.2 of the 2010 Standards which requires rounding up values to the next whole number for calculations of percentages in scoping.

Guest Rooms with Communication Features. The revisions at section 224.4 of the 2010 Standards effect no substantive change from the 1991 Standards with respect to the number of guest rooms required to provide communication features. The scoping requirement is consolidated into a single table, instead of appearing in three sections as in the 1991 Standards. The revised provisions also limit the overlap between guest rooms required to provide mobility features and guest rooms required to provide communication features. Section 224.5 of the 2010 Standards requires that at least one guest room providing mobility features must also provide communications features. At least one, but not more than ten percent (10%), of the guest rooms required to provide mobility features can also satisfy the minimum number of guest rooms required to provide communication features.

Commenters suggested that the requirements for scoping and dispersion of guest rooms for persons with mobility impairments and guest rooms with communication features are too complex for the industry to effectively implement.

The Department believes the requirements for guest rooms with communications features in the 2010 Standards clarify the requirements necessary to provide equal opportunity for travelers with disabilities. Additional technical assistance will be made available to address questions before the rule goes into effect.

Visible Alarms in Guest Rooms with Communication Features. The 1991 Standards at sections 9.3.1 and 4.28.4 require transient lodging guest rooms with communication features to provide either permanently installed visible alarms that are connected to the building fire alarm system or portable visible alarms that are connected to a standard 110-volt electrical outlet and are both activated by the building fire alarm system and provide a visible alarm when the single station smoke detector is activated. Section 215.4 of the 2010 Standards no longer includes the portable visible alarm option and instead requires that transient lodging guest rooms with communication features be equipped with a fire alarm system which includes permanently installed audible and visible

alarms in accordance with NFPA 72 National Fire Alarm Code (1999 or 2002 edition). Such guest rooms with communication features are also required by section 806.3.2 of the 2010 Standards to be equipped with visible notification devices that alert room occupants of incoming telephone calls and a door knock or bell.

The 2010 Standards add a new exception for alterations to existing facilities that exempts existing fire alarm systems from providing visible alarms, unless the fire alarm system itself is upgraded or replaced, or a new fire alarm system is installed. Transient lodging facilities that alter guest rooms are not required to provide permanently installed visible alarms complying with the NFPA 72 if the existing fire alarm system has not been upgraded or replaced, or a new fire alarm system has not been installed.

Commenters representing small providers of transient lodging raised concerns about the proposed changes to prohibit the use of portable visible alarms used in transient lodging guest rooms. These commenters recommended retaining requirements that allow the use of portable visible alarms.

Persons who are deaf or hard of hearing have reported that portable visible alarms used in transient lodging guest rooms are deficient because the alarms are not activated by the building fire alarm system, and the alarms do not work when the building power source goes out in emergencies. The 2010 Standards are consistent with the model building, fire, and life safety codes as applied to newly constructed transient lodging facilities. One commenter sought confirmation of its understanding of visible alarm requirements from the Department. This commenter interpreted the exception to section 215.1 of the 2010 Standards and the Department's commentary to the NPRM to mean that if a transient lodging facility does not have permanently installed visible alarms in its communication accessible guest rooms, it will not be required to provide such alarms until such time that its fire alarm system is upgraded or replaced, or a new fire alarm system is installed. In addition, this commenter also understood that, if a hotel already has permanently installed visible alarms in all of its mobility accessible guest rooms, it would not have to relocate such visible alarms and other communication features in those rooms to other guest rooms to comply with the ten percent (10%) overlap requirement until the alarm system is upgraded or replaced.

This commenter's interpretation and understanding are consistent with the Department's position in this matter. Section 215.4 of the 2010 Standards requires that guest rooms required to have communication features be equipped with a fire alarm system complying with section 702. Communication accessible guest rooms are required to have all of the communication features described in section 806.3 of the 2010 Standards including a fire alarm system which provides both audible and visible alarms. The exception to section 215.1 of the 2010 Standards, which applies only to fire alarm requirements for guest rooms with communication features in existing facilities, exempts the visible alarm requirement until such time as the existing fire alarm system is upgraded or replaced, or a new fire alarm system is installed. If guest rooms in existing facilities are altered and they are required by section 224 of the 2010 Standards to have communication features, such guest rooms are required by section 806.3 to have all other communication features including notification devices.

Vanity Counter Space. Section 806.2.4.1 of the 2010 Standards requires that if vanity countertop space is provided in inaccessible transient lodging guest bathrooms, comparable vanity space must be provided in accessible transient lodging guest bathrooms.

A commenter questioned whether in existing facilities vanity countertop space may be provided through the addition of a shelf. Another commenter found the term ''comparable'' vague and expressed concern about confusion the new requirement would cause. This commenter suggested that the phrase ''equal area in square inches'' be used instead of comparable vanity space.

In some circumstances, the addition of a shelf in an existing facility may be a reasonable way to provide a space for travelers with disabilities to use their toiletries and other personal items. However, this is a determination that must be made on a case-by-case basis. Comparable vanity countertop space need not be one continuous surface and need not be exactly the same size as the countertops in comparable guest bathrooms. For example, accessible shelving within reach of the lavatory could be stacked to provide usable surfaces for toiletries and other personal items.

Shower and Sauna Doors in Transient Lodging Facilities. Section 9.4 of the 1991 Standards and section 206.5.3 of the 2010 Standards both require passage doors in transient lodging guest rooms that do not provide mobility features to provide at least 32 inches of clear width. Congress directed this requirement to be included so that individuals with disabilities could visit guests in other rooms. See H. Rept. 101–485, pt. 2, at 118 (1990); S. Rept. 101–116, at 70 (1989). Section 224.1.2 of the 2010 Standards adds a new exception to clarify that shower and sauna doors in such inaccessible guest rooms are exempt from the requirement for passage doors to provide at least 32 inches of clear width. Two commenters requested that saunas and steam rooms in existing facilities be exempt from the section 224.1.2 requirement and that the requirement be made applicable to new construction only.

The exemption to the section 224.1.2 requirement for a 32-inch wide clearance at doors to shower and saunas applies only to those showers and saunas in guest rooms which are not required to have mobility features. Showers and saunas in other locations, including those in common use areas and guest rooms with mobility features, are required to comply with the 32-inch clear width standard as well as other applicable accessibility standards. Saunas come in a variety of types: portable, pre-built, pre-cut, and custom-made. All saunas except for custom-made saunas are made to manufacturers' standard dimensions. The Department is aware that creating the required 32-inch clearance at existing narrower doorways may not always be technically feasible. However, the Department believes that owners and operators will have an opportunity to provide the required doorway clearance, unless doing so is technically infeasible, when an alteration to an existing sauna is undertaken. Therefore, the Department has retained these requirements.

Platform Lifts in Transient Lodging Guest Rooms and Dwelling Units. The 1991 Standards, at section 4.1.3(5), exception 4, and the 2010 Standards, at sections 206.7 and 206.7.6, both limit the locations where platform lifts are permitted to be used as part of an accessible route. The 2010 Standards add a new scoping requirement that permits platform lifts to be used to connect levels within transient lodging guest rooms and dwelling units with mobility features.

806 Transient Lodging Guest Rooms

In the NPRM, the Department included floor plans showing examples of accessible guest rooms and bathrooms designs with mobility features to illustrate how compliance with the 2010 Standards could be accomplished with little or no additional space compared to designs that comply with the 1991 Standards.

Commenters noted that the Department's plans showing accessible transient lodging guest rooms compliant with the 2010 Standards were not common in the transient lodging industry and also noted that the plans omitted doors at sleeping room closets.

The Department agrees that the configuration of the accessible bathrooms is somewhat different from past designs used by the industry, but this was done to meet the requirements of the 2010 Standards. The plans were provided to show that, with some redesign, the 2010 Standards do not normally increase the square footage of an accessible sleeping room or bathroom with mobility features in new construction. The Department has also modified several accessible guest room plans to show that doors can be installed on closets and comply with the 2010 Standards.

A commenter stated that the Department's drawings suggest that the fan coil units for heat and air conditioning are overhead, while the typical sleeping room usually has a vertical unit, or a packaged terminal air conditioning unit within the room. The Department's drawings are sample plans, showing the layout of the space, relationship of elements to each other, and required clear floor and turning spaces. It was not the intent of the Department to provide precise locations for all elements, including heating and air conditioning units.

Commenters noted that in guest rooms with two beds, each bed was positioned close to a wall, reducing access on one side. Another commenter stated that additional housekeeping time is needed to clean the room when beds are placed closer to walls. The 2010 Standards require that, when two beds are provided, there must be at least 36 inches of clear space between the beds. The plans provided in the NPRM showed two bed arrangements with adequate clear width complying with the 1991 Standards and the 2010 Standards. Additional space can be provided on the other side of the beds to facilitate housekeeping as long as the clear floor space between beds is at least 36 inches wide.

Commenters stated that chases in sleeping room bathrooms that route plumbing and other utilities can present challenges when modifying existing facilities. In multi-story facilities, relocating or re-routing these elements may not be possible, limiting options for providing access. The Department recognizes that relocating mechanical chases in multi-story facilities may be difficult or impossible to accomplish. While these issues do not exist in new facilities, altered existing facilities must comply with the 2010 Standards to the extent that it is technically feasible to do so. When an alteration cannot fully comply because it is technically infeasible to do so, the alteration must still be designed to comply to the greatest extent feasible.

Commenters noted that on some of the Department's plans where a vanity is located adjacent to a bathtub, the vanity may require more maintenance due to exposure to water. The Department agrees that it would be advisable that items placed next to a bathtub or shower be made of materials that are not susceptible to water damage.

Transient Lodging Guest Room Floor Plans and Related Text. The Department has included the following floor plans showing application of the requirements of the 2010 Standards without significant loss of guest room living space in transient lodging compared to the 1991 Standards.

Plan 1A: 13-Foot Wide Accessible Guest Room

This drawing shows an accessible 13-foot wide guest room with features that comply with the 2010 Standards. Features include a standard bathtub with a seat, comparable vanity, clothes closet with swinging doors, and door connecting to adjacent guest room. Furnishings include a king bed and additional seating.

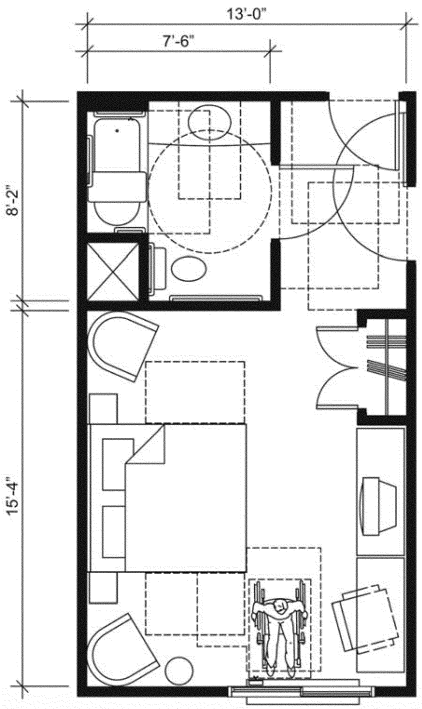

The following accessible features are provided in the bathroom:

- Comparable vanity counter top space (section 806);
- Bathtub with a lavatory at the control end (section 607.2);
- Removable bathtub seat (section 607.3);
- Clearance in front of the bathtub extends its full length and is 30 inches wide min. (section 607.2);
- Recessed bathtub location permits shorter rear grab bar at water closet (section 604.5.2);
- Circular turning space in room (section 603.2.1);
- Required clear floor spaces at fixtures and turning space overlap (section 603.2.2);
- Turning space includes knee and toe clearance at lavatory (section 304.3);
- Water closet clearance is 60 inches at back wall and 56 inches deep (section 604.3);
- Centerline of the water closet at 16-18 inches from side wall (section 604.2); and
- No other fixtures or obstructions located within required water closet clearance (section 604.3).

The following accessible features are provided in the living area:

- T-shaped turning space (section 304.3.2);
- Accessible route (section 402);
- Clear floor space on both sides of the bed (section 806.2.3);
- Maneuvering clearances at all doors (section 404.2);
- Accessible operable window (section 309); and
- Accessible controls for the heat and air conditioning (section 309).

Plan 1B: 13-Foot Wide Accessible Guest Room

This drawing shows an accessible 13-foot wide guest room with features that comply with the 2010 Standards. Features include a standard bathtub with a seat, comparable vanity, clothes closet with swinging doors, and door connecting to adjacent guest room. Furnishings include two beds.

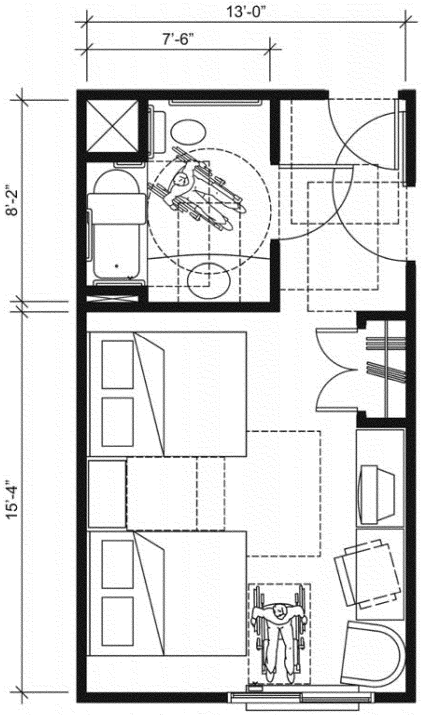

The following accessible features are provided in the bathroom:

- Comparable vanity counter top space (section 806);
- Bathtub with a lavatory at the control end (section 607.2);
- Removable bathtub seat (section 607.3);
- Clearance in front of the bathtub extends its full length and is 30 inches wide min. (section 607.2);
- Recessed bathtub location permits shorter rear grab bar at water closet (section 604.5.2);
- Circular turning space in room (section 603.2.1);
- Required clear floor spaces at fixtures and turning space overlap (section 603.2.2);
- Turning space includes knee and toe clearance at lavatory (section 304.3);
- Water closet clearance is 60 inches at back wall and 56 inches deep (section 604.3);
- Centerline of the water closet at 16-18 inches from side wall (section 604.2); and
- No other fixtures or obstructions located within required water closet clearance (section 604.3);

The following accessible features are provided in the living area:

- T-shaped turning space (section 304.3.2);
- Accessible route (section 402);
- Clear floor space between beds (section 806.2.3);
- Maneuvering clearances at all doors (section 404.2);
- Accessible operable window (section 309); and
- Accessible controls for the heat and air conditioning (section 309).

Plan 2A: 13-Foot Wide Accessible Guest Room

This drawing shows an accessible 13-foot wide guest room with features that comply with the 2010 Standards. Features include a standard roll-in shower with a seat, comparable vanity, wardrobe, and door connecting to adjacent guest room. Furnishings include a king bed and additional seating.

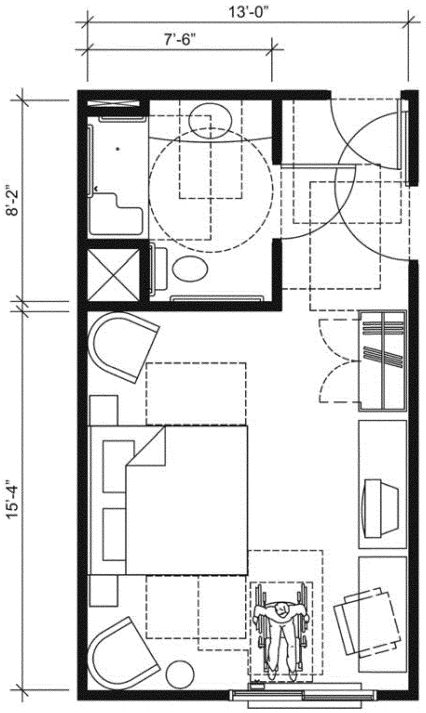

The following accessible features are provided in the bathroom:

- Comparable vanity counter top space (section 806);
- Standard roll-in type shower with folding seat (section 608.2.2);
- Recessed roll-in shower location permits shorter rear grab bar at water closet (section 604.5.2);
- Clear floor space adjacent to shower min. 30 inches wide by 60 inches long (section 608.2.2);
- Circular turning space in room (section 603.2.1);
- Required clear floor spaces at fixtures and turning space overlap (section 603.2.2);
- Turning space includes knee and toe clearance at lavatory (section 304.3);
- Water closet clearance is 60 inches at back wall and 56 inches deep (section 604.3);
- Centerline of the water closet at 16-18 inches from side wall (section 604.2); and
- No other fixtures or obstructions located within required water closet clearance (section 604.3).

The following accessible features are provided in the living area:

- T-shaped turning space (section 304.3.2);
- Accessible route (section 402);
- Clear floor space on both sides of the bed (section 806.2.3);
- Maneuvering clearances at all doors (section 404.2);
- Accessible operable window (section 309); and
- Accessible controls for the heat and air conditioning (section 309).

Plan 2B: 13-Foot Wide Accessible Guest Room

This drawing shows an accessible 13-foot wide guest room with features that comply with the 2010 Standards. Features include an alternate roll-in shower with a seat, comparable vanity, wardrobe, and door connecting to adjacent guest room. Furnishings include two beds.

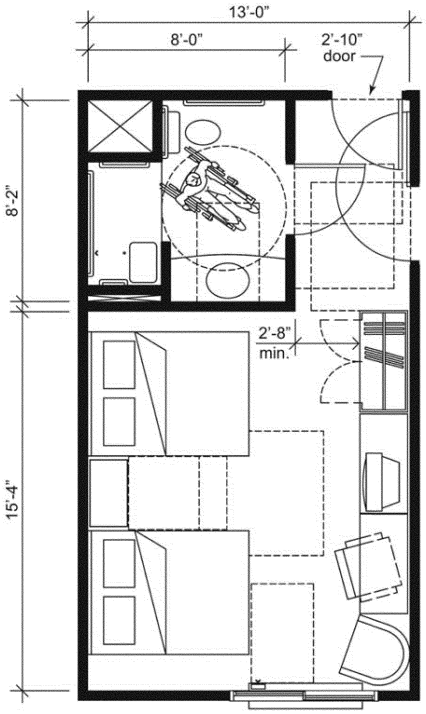

The following accessible features are provided in the bathroom:

- Comparable vanity counter top space (section 806);
- Alternate roll-in type shower with folding seat is 36 inches deep and 60 inches wide (section 608.2.3);
- Alternate roll-in shower has a 36-inch wide entry at one end of the long side of the compartment (section 608.2.3);
- Recessed alternate roll-in shower location permits shorter rear grab bar at water closet (section 604.5.2);
- Circular turning space in room (section 603.2.1);
- Required clear floor spaces at fixtures and turning space overlap (section 603.2.2);
- Turning space includes knee and toe clearance at lavatory (section 304.3);
- Water closet clearance is 60 inches at back wall and 56 inches deep (section 604.3);
- Centerline of the water closet at 16-18 inches from side wall (section 604.2); and
- No other fixtures or obstructions located within required water closet clearance (section 604.3).

The following accessible features are provided in the living area:

- T-shaped turning space (section 304.3.2);
- Accessible route (section 402);
- Clear floor space between beds (section 806.2.3);
- Maneuvering clearances at all doors (section 404.2);
- Accessible operable window (section 309); and
- Accessible controls for the heat and air conditioning (section 309).

Plan 3A: 12-Foot Wide Accessible Guest Room

This drawing shows an accessible 12-foot wide guest room with features that comply with the 2010 Standards. Features include a bathtub with a seat, comparable vanity, open clothes closet, and door connecting to adjacent guest room. Furnishings include a king bed and additional seating.

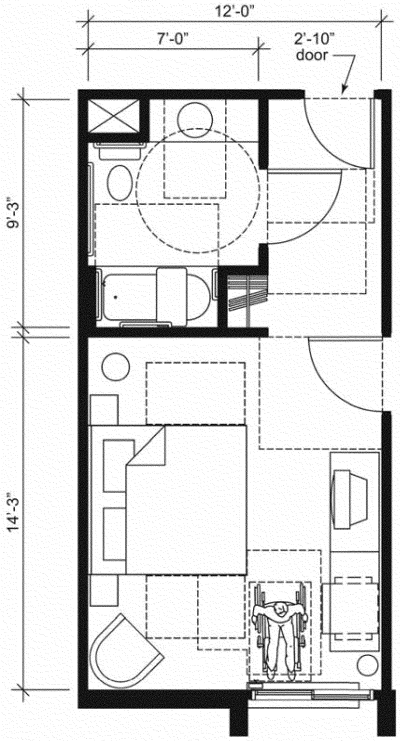

The following accessible features are provided in the bathroom:

- Comparable vanity counter top space (section 806);
- Bathtub (section 607.2);
- Removable bathtub seat (section 607.3);
- Clearance in front of the bathtub extends its full length and is 30 inches wide min. (section 607.2);
- Recessed lavatory with vanity countertop permits shorter rear grab bar at water closet (section 604.5.2);
- Circular turning space in room (section 603.2.1);
- Required clear floor spaces at fixtures and turning space overlap (section 603.2.2);
- Turning space includes knee and toe clearance at lavatory (section 304.3);
- Water closet clearance is 60 inches at back wall and 56 inches deep (section 604.3);
- Centerline of the water closet at 16-18 inches from side wall (section 604.2); and
- No other fixtures or obstructions located within required water closet clearance (section 604.3).

The following accessible features are provided in the living area:

- T-shaped turning space (section 304.3.2);
- Accessible route (section 402);
- Clear floor space on both sides of the bed (section 806.2.3);
- Maneuvering clearances at all doors (section 404.2);
- Accessible operable window (section 309); and
- Accessible controls for the heat and air conditioning (section 309).

Plan 3B: 12-Foot Wide Accessible Guest Room

This drawing shows an accessible 12-foot wide guest room with features that comply with the 2010 Standards. Features include a standard roll-in shower with a seat, comparable vanity, wardrobe, and door connecting to adjacent guest room. Furnishings include two beds.

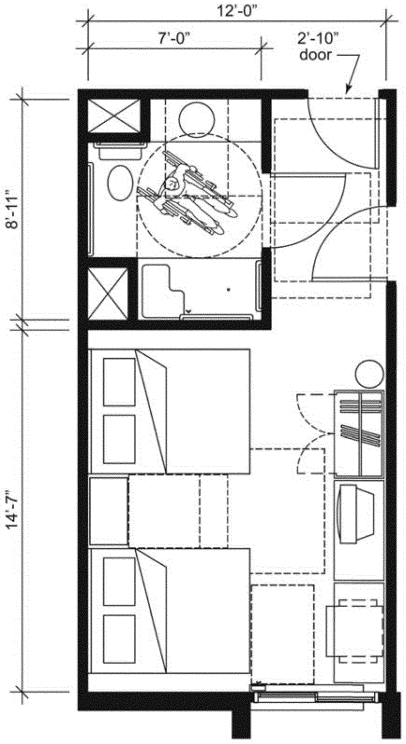

The following accessible features are provided in the bathroom:

- Comparable vanity counter top space (section 806);
- Standard roll-in type shower with folding seat (section 608.2.2);
- Recessed lavatory with vanity counter top permits shorter rear grab bar at water closet (section 604.5.2);
- Clear floor space adjacent to shower min. 30 inches wide by 60 inches long (section 608.2.2);
- Circular turning space in room (section 603.2.1);
- Required clear floor spaces at fixtures and turning space overlap (section 603.2.2);
- Turning space includes knee and toe clearance at lavatory (section 304.3);
- Water closet clearance is 60 inches at back wall and 56 inches deep (section 604.3);
- Centerline of the water closet at 16-18 inches from side wall (section 604.2); and
- No other fixtures or obstructions located within required water closet clearance (section 604.3).

The following accessible features are provided in the living area:

- T-shaped turning space (section 304.3.2);
- Accessible route (section 402);
- Clear floor space between beds (section 806.2.3);
- Maneuvering clearances at all doors (section 404.2);
- Accessible operable window (section 309); and
- Accessible controls for the heat and air conditioning (section 309).

Plan 4A: 13-Foot Wide Accessible Guest Room

This drawing shows an accessible 13-foot wide guest room with features that comply with the 2010 Standards. Features include a standard roll-in shower with a seat, comparable vanity, clothes closet with swinging doors, and door connecting to adjacent guest room. Furnishings include a king bed and additional seating.

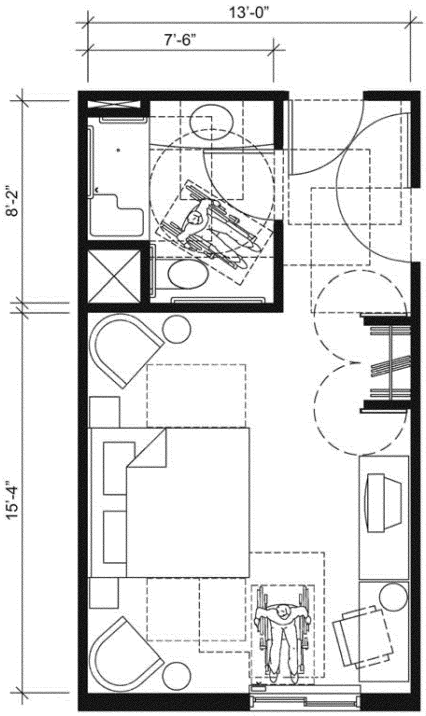

The following accessible features are provided in the bathroom:

- Comparable vanity counter top space (section 806);
- Standard roll-in type shower with folding seat (section 608.2.2);
- Clear floor space adjacent to shower min. 30 inches wide by 60 inches long (section 608.2.2);
- Recessed roll-in shower location permits shorter rear grab bar at water closet (section 604.5.2);
- Circular turning space in room (section 603.2.1);
- Required clear floor spaces at fixtures and turning space overlap (section 603.2.2);
- Turning space includes knee and toe clearance at lavatory (section 304.3);
- Water closet clearance is 60 inches at back wall and 56 inches deep (section 604.3);
- Centerline of the water closet at 16-18 inches from side wall (section 604.2); and
- No other fixtures or obstructions located within required water closet clearance (section 604.3).
- 30-inch wide by 48-inch long minimum clear floor space provided beyond the arc of the swing of the entry door (section 603.2.3 exception 2).

The following accessible features are provided in the living area:

- T-shaped turning space (section 304.3.2);
- Accessible route (section 402);
- Clear floor space on both sides of the bed (section 806.2.3);
- Maneuvering clearances at all doors (section 404.2);
- Accessible operable window (section 309); and
- Accessible controls for the heat and air conditioning (section 309).

Plan 4B: 13-Foot Wide Accessible Guest Room

This drawing shows an accessible 13-foot wide guest room with features that comply with the 2010 Standards. Features include an alternate roll-in shower with a seat, comparable vanity, wardrobe, and door connecting to adjacent guest room. Furnishings include two beds.

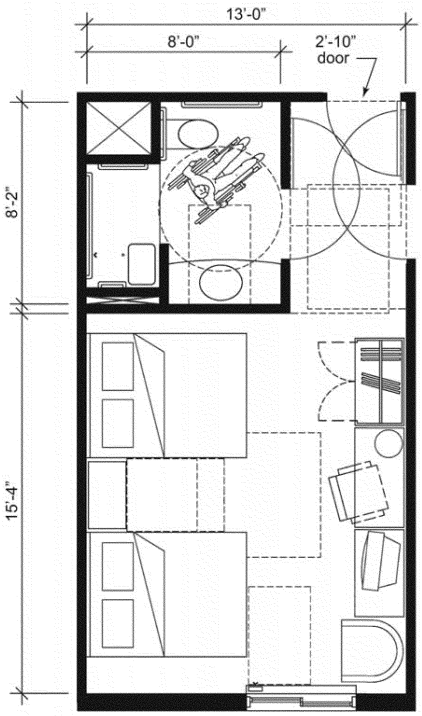

The following accessible features are provided in the bathroom:

- Comparable vanity counter top space (section 806);
- Alternate roll-in type shower with folding seat is 36 inches deep and 60 inches wide (section 608.2.3);
- Alternate roll-in shower has a 36-inch wide entry at one end of the long end of the compartment (section 608.2.3);
- Recessed alternate roll-in shower location permits shorter rear grab bar at water closet (section 604.5.2);
- Circular turning space in room (section 603.2.1);
- Required clear floor spaces at fixtures and turning space overlap (section 603.2.2);
- Turning space includes knee and toe clearance at lavatory (section 304.3);
- Water closet clearance is 60 inches at back wall and 56 inches deep (section 604.3);
- Centerline of the water closet at 16-18 inches from side wall (section 604.2); and
- No other fixtures or obstructions located within required water closet clearance (section 604.3).

The following accessible features are provided in the living area:

- T-shaped turning space (section 304.3.2);
- Accessible route (section 402);
- Clear floor space between beds (section 806.2.3);
- Maneuvering clearances at all doors (section 404.2);
- Accessible operable window (section 309); and
- Accessible controls for the heat and air conditioning (section 309).

Plan 5A: 13-Foot Wide Accessible Guest Room

This drawing shows an accessible 13-foot wide guest room with features that comply with the 2010 Standards. Features include a transfer shower, comparable vanity, clothes closet with swinging door, and door connecting to adjacent guest room. Furnishings include a king bed and additional seating.

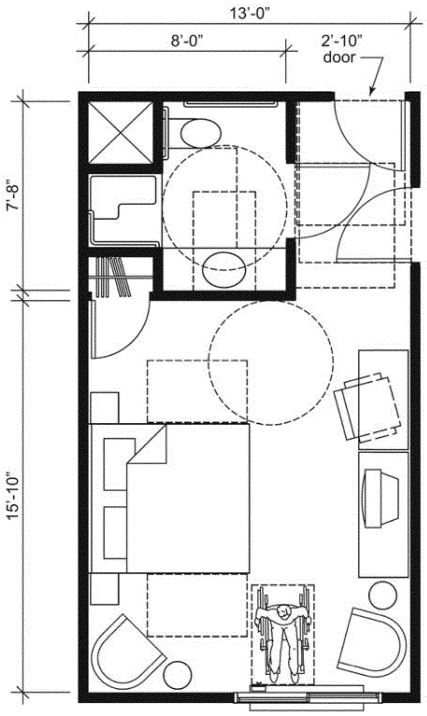

The following accessible features are provided in the bathroom:

- Comparable vanity counter top space (section 806);
- Transfer shower (section 603.2);
- Shower seat (section 610.3);
- Clearance in front of the shower extends beyond the seat and is 36 inches wide min. (section 607.2);
- Recessed transfer shower location permits shorter rear grab bar at water closet (section 604.5.2);
- Circular turning space in room (section 603.2.1);
- Required clear floor spaces at fixtures and turning space overlap (section 603.2.2);
- Water closet clearance is 60 inches at back wall and 56 inches deep (section 604.3);
- Centerline of the water closet at 16 inches from side wall (section 604.2); and
- No other fixtures or obstructions located within required water closet clearance (section 604.3).

The following accessible features are provided in the living area:

- Circular turning space (section 304.3.2);
- Accessible route (section 402);
- Clear floor space on both sides of the bed (section 806.2.3);
- Maneuvering clearances at all doors (section 404.2);
- Accessible operable window (section 229); and
- Accessible controls for the heat and air conditioning (section 309).

Plan 5B: 13-Foot Wide Accessible Guest Room

This drawing shows an accessible 13-foot wide guest room with features that comply with the 2010 Standards. Features include a transfer shower, comparable vanity, open clothes closet, and door connecting to adjacent guest room. Furnishings include two beds.

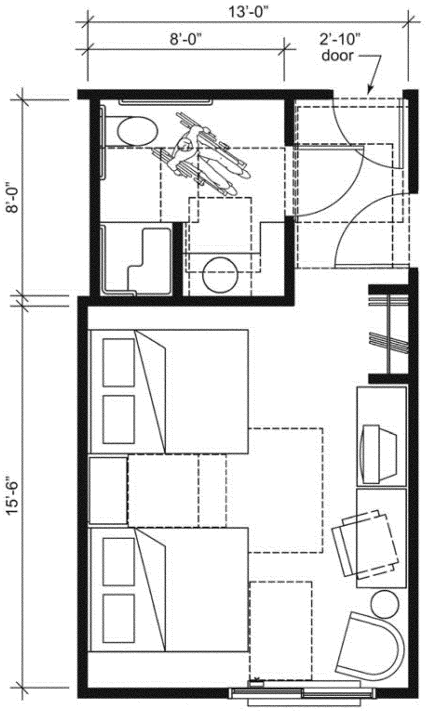

The following accessible features are provided in the bathroom:

- Comparable vanity counter top space (section 806);
- Transfer shower (section 603.2);
- Shower seat (section 610.3);
- Clearance in front of the shower extends beyond the seat and is 36 inches wide min. (section 607.2);
- Lavatory with vanity counter top recessed to permit shorter rear grab bar at water closet (section 604.5.2);
- T-shaped turning space in room (section 603.2.1);
- Required clear floor spaces at fixtures and turning space overlap (section 603.2.2);
- Water closet clearance is 60 inches at back wall and 56 inches deep (section 604.3);
- Centerline of the water closet at 16-18 inches from side wall (section 604.2); and
- No other fixtures or obstructions located within required water closet clearance (section 604.3).

The following accessible features are provided in the living area:

- T-shaped turning space (section 304.3.2);
- Accessible route (section 402);
- Clear floor space between beds (section 806.2.3);
- Maneuvering clearances at all doors (section 404.2);
- Accessible operable window (section 229); and
- Accessible controls for the heat and air conditioning (section 309).

Plan 6A: 12-Foot Wide Accessible Guest Room

This drawing shows an accessible 12-foot wide guest room with features that comply with the 2010 Standards. Features include a transfer shower, water closet length (rim to rear wall) 24 inches maximum, comparable vanity, clothes closet with swinging door, and door connecting to adjacent guest room. Furnishings include a king bed and additional seating.

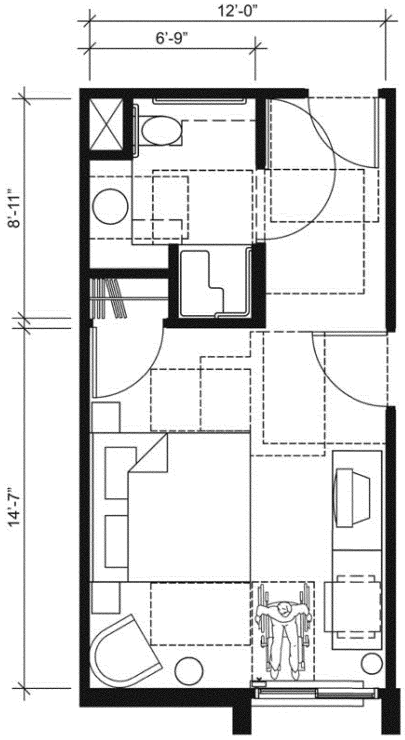

The following accessible features are provided in the bathroom:

- Comparable vanity counter top space (section 806);
- Transfer shower (section 603.2);
- Shower seat (section 610.3);
- Clearance in front of the shower extends beyond the seat and is 36 inches wide min. (section 607.2);
- Recessed lavatory with vanity counter top permits shorter rear grab bar at water closet (section 604.5.2);
- T-shaped turning space in room (section 603.2.1);
- Required clear floor spaces at fixtures and turning space overlap (section 603.2.2);
- Water closet clearance is 60 inches at back wall and 56 inches deep (section 604.3);
- Centerline of the water closet at 16 inches from side wall (section 604.2); and
- No other fixtures or obstructions located within required water closet clearance (section 604.3).

The following accessible features are provided in the living area:

- T-shaped turning space (section 304.3.2);
- Accessible route (section 402);
- Clear floor space on both sides of the bed (section 806.2.3);
- Maneuvering clearances at all doors (section 404.2);
- Accessible operable window (section 229); and
- Accessible controls for the heat and air conditioning (section 309).

Plan 6B: 12-Foot Wide Accessible Guest Room

This drawing shows an accessible 12-foot wide guest room with features that comply with the 2010 Standards. Features include a transfer shower, water closet length (rim to rear wall) 24 inches maximum, comparable vanity, wardrobe, and door connecting to adjacent guest room. Furnishings include two beds.

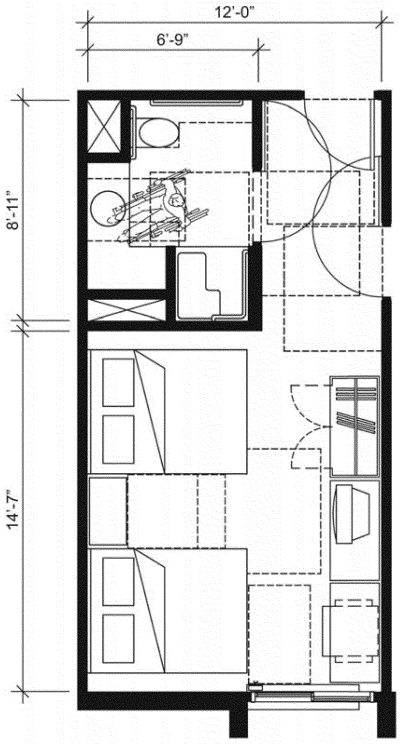

The following accessible features are provided in the bathroom:

- Comparable vanity counter top space (section 806);
- Transfer shower (section 603.2);
- Shower seat (section 610.3);
- Clearance in front of the shower extends beyond the seat and is 36 inches wide min. (section 607.2);
- Recessed lavatory with vanity counter top permits shorter rear grab bar at water closet (section 604.5.2);
- Circular turning space in room (section 603.2.1);
- Required clear floor spaces at fixtures and turning space overlap (section 603.2.2);
- Water closet clearance is 60 inches at back wall and 56 inches deep (section 604.3);
- Centerline of the water closet at 16 inches from side wall (section 604.2); and
- No other fixtures or obstructions located within required water closet clearance (section 604.3).

The following accessible features are provided in the living area:

- Circular turning space (section 304.3.2);
- Accessible route (section 402);
- Clear floor space between beds (section 806.2.3);
- Maneuvering clearances at all doors (section 404.2);
- Accessible operable window (section 229); and
- Accessible controls for the heat and air conditioning (section 309).

225 and 811 Storage

Section 225 of the 2010 Standards provides that where storage is provided in accessible spaces, at least one of each type shall comply with the 2010 Standards. Self-service shelving is required to be on an accessible route, but is not required to comply with the reach range requirements. These requirements are consistent with the 1991 Standards.

Section 225.3 adds a new scoping requirement for self-storage facilities. Facilities with 200 or fewer storage spaces will be required to make at least five percent (5%) of the storage spaces accessible. Facilities with more than 200 storage spaces will be required to provide ten accessible storage spaces, plus two percent (2%) of the total storage spaces over 200.

Sections 225.2.1 and 811 of the 2010 Standards require lockers to meet accessibility requirements. Where lockers are provided in clusters, five percent (5%) but at least one locker in each cluster will have to comply. Under the 1991 Standards, only one locker of each type provided must be accessible.

Commenters recommended that the Department adopt language requiring public accommodations to provide access to all self-service shelves and display areas available to

customers. Other commenters opposed this requirement as too burdensome to retail and other entities and claimed that significant revenue would be lost if this requirement were to be implemented.

Other commenters raised concerns that section 225.2.2 of the 2010 Standards scopes only self-service shelving whereas section 4.1.3(12)(b) of the 1991 Standards applies to both ''shelves or display units.''

Although ''display units'' were not included in the 2010 Standards under the belief that displays are not to be touched and therefore by definition cannot be ''self-service,'' both the 2010 Standards and the 1991 Standards should be read broadly to apply to all types of shelves, racks, hooks, and similar self-service merchandising fittings, including self-service display units. Such fixtures are permitted to be installed above or below the reach ranges possible for many persons with disabilities so that space available for merchandising is used as efficiently as possible.

226 and 902 Dining Surfaces and Work Surfaces

Section 226.1 of the 2010 Standards require that where dining surfaces are provided for the consumption of food or drink, at least five percent (5%) of the seating spaces and standing spaces at the dining surfaces comply with section 902. Section 902.2 requires the provision of accessible knee and toe clearance.

Commenters stated that basing accessible seating on seating spaces and standing spaces potentially represents a significant increase in scoping, particularly given the ambiguity in what represents a ''standing space'' and urged a return to the 1991 Standard of requiring accessible seating based on fixed dining tables. The scoping change merely takes into account that tables may vary in size so that basing the calculation on the number of tables rather than on the number of individuals that may be accommodated by the tables could unnecessarily restrict opportunities for persons with disabilities. The revised scoping permits greater flexibility by allowing designers to disperse accessible seating and standing spaces throughout the dining area. Human factors data, which is readily available to designers, provides information about the amount of space required for both eating and drinking while seated or standing.

227 and 904 Sales and Service

Check-Out Aisles and Sales and Service Counters. The 1991 Standards, at section 7.2, and the 2010 Standards, at section 904.4, contain technical requirements for sales and service counters. The 1991 Standards generally require sales and service counters to provide an accessible portion at least 36 inches long and no higher than 36 inches above the finish floor. The nondiscrimination requirements of the ADA regulations require the level of service provided at the accessible portion of any sales and service counter to be the same as the level of service provided at the inaccessible portions of the counter.

The 2010 Standards specify different lengths for the accessible portion of sales and service counters based on the type of approach provided. Where a forward approach is provided, the accessible portion of the counter must be at least 30 inches long and no higher than 36 inches, and knee and toe space must be provided under the counter. The requirement that knee and toe space be provided where only clear floor space for a forward approach to a sales and service counter is provided is not a new requirement. It is a clarification of the ongoing requirement that part of the sales and service counter be accessible. This requirement applies to the entire accessible part of sales and service counters and requires that the accessible clear floor or ground space adjacent to those counters be kept clear of merchandise, equipment, and other items so that the accessible part of the counter is readily accessible to and usable by individuals with disabilities. The accessible part of the counter must also be staffed and provide an equivalent level of service as that provided to all customers.

Where clear floor space for a parallel approach is provided, the accessible portion of the counter must be at least 36 inches long and no higher than 36 inches above the finish floor. A clear floor or ground space that is at least 48 inches long x 30 inches wide must be provided positioned for a parallel approach adjacent to the 36-inch minimum length of counter.

Section 904.4 of the 2010 Standards includes an exception for alterations to sales and service counters in existing facilities. It permits the accessible portion of the counter to be at least 24 inches long, where providing a longer accessible counter will result in a reduction in the number of existing counters at work stations or existing mailboxes, provided that the required clear floor or ground space is centered on the accessible length of the counter.

Section 904.4 of the 2010 Standards also clarifies that the accessible portion of the counter must extend the same depth as the sales or service counter top. Where the counter is a single-height counter, this requirement applies across the entire depth of the counter top. Where the counter is a split-height counter, this requirement applies only to the customer side of the counter top. The employee-side of the counter top may be higher or lower than the customer-side of the counter top.

Commenters recommended that the Department consider a regulatory alternative exempting small retailers from the new knee and toe clearance requirement and retaining existing wheelchair accessibility standards for sales and service counters. These commenters believed that the knee and toe clearance requirements will cause a reduction in the sales and inventory space at check-out aisles and other sales and service counters.

Both the 1991 and the 2010 Standards permit covered entities to determine whether they will provide a forward or a parallel approach to sales and service counters. So any facility that does not wish to provide the knee or toe clearance required for a front approach to such a counter may avoid that option. However, the Department believes that permitting a forward approach without requiring knee and toe clearance is not adequate to provide accessibility because the person using a wheelchair will be prevented from coming close enough to the counter to see the merchandise or to transact business with a degree of convenience that is comparable to that provided to other customers.

A parallel approach to sales and service counters also can provide the accessibility required by the 2010 Standards. Individuals using wheelchairs can approach sales and service counters from the side, and, assuming the necessary elements, features, or merchandise necessary to complete a business transaction are within the reach range requirements for a side approach, the needs of individuals with disabilities can be met effectively.

Section 227 of the 2010 Standards clarifies the requirements for food service lines. Queues and waiting lines serving counters or check-out aisles, including those for food service, must be accessible to individuals with disabilities.

229 Windows

A new requirement at section 229.1 of the 2010 Standards provides that if operable windows are provided for building users, then at least one window in an accessible space must be equipped with controls that comply with section 309.

Commenters generally supported this provision but some commenters asked whether the maximum five-pounds (5 lbs.) of force requirement of section 309 applies to the window latch itself or only to the force required to open the window. Section 309 applies to all controls and operating mechanisms, so the latch must comply with the requirement to operate with no more than five pounds of force (5 lbf).

230 and 708 Two-Way Communication Systems

New provisions of the 2010 Standards at sections 230.1 and 708 require two-way communications systems to be equipped with visible as well as audible signals.

231 and 808 Judicial Facilities and Courtrooms

Section 231 of the 2010 Standards adds requirements for accessible courtrooms, holding cells, and visiting areas.

Accessible Courtroom Stations. Sections 231.2, 808, 304, 305, and 902 of the 2010 Standards provide increased accessibility at courtroom stations. Clear floor space for a forward approach is required for all courtroom stations (judges' benches, clerks' stations, bailiffs' stations, deputy clerks' stations, court reporters' stations, and litigants' and counsel stations). Other applicable specifications include accessible work surface heights and toe and knee clearance.

Accessible Jury Boxes, Attorney Areas, and Witness Stands. Section 206.2.4 of the 2010 Standards requires, in new construction and alterations, at least one accessible route to connect accessible building or facility entrances with all accessible spaces and elements within the building or facility that are connected by a circulation path unless they are exempted by Exceptions 1–7 of section 206.2.3. Advisory 206.2.4 Spaces and Elements Exception 1 explains that the exception allowing raised courtroom stations to be used by court employees, such as judge's benches, to be adaptable does not apply to areas of the courtroom likely to be used by members of the public such as jury areas, attorney areas, or witness stands. These areas must be on an accessible route at the time of initial construction or alteration.

Raised Courtroom Stations Not for Members of the Public. Section 206.2.4, Exception 1 of the 2010 Standards provides that raised courtroom stations that are used by judges, clerks, bailiffs, and court reporters will not have to provide full vertical access when first constructed or altered if they are constructed to be easily adaptable to provide vertical accessibility.

One commenter suggested that a sufficient number of accessible benches for judges with disabilities, in addition to requiring accessible witness stands and attorney areas, be required. The Department believes that the requirements regarding raised benches for judges are easily adaptable to provide vertical access in the event a judge requires an accessible bench. Section 206.2.4 of the 2010 Standards provides that raised courtroom stations used by judges and other judicial staff do not have to provide full vertical access when first constructed or altered as long as the required clear floor space, maneuvering space, and electrical service,

where appropriate, is provided at the time of new construction or can be achieved without substantial reconstruction during alterations.

A commenter asserted that there is nothing inherent in clerks' stations, jury boxes, and witness stands that require them to be raised. While it would, of course, be easiest to provide access by eliminating height differences among courtroom elements, the Department recognizes that accessibility is only one factor that must be considered in the design process of a functioning courtroom. The need to ensure the ability of the judge to maintain order, the need to ensure sight lines among the judge, the witness, the jury, and other participants, and the need to maintain the security of the participants all affect the design of the space. The Department believes that the 2010 Standards have been drafted in a way that will achieve accessibility without unduly constraining the ability of a designer to address the other considerations that are unique to courtrooms.

Commenters argued that permitting courtroom stations to be adaptable rather than fully accessible at the time of new construction likely will lead to discrimination in hiring of clerks, court reporters, and other court staff. The Department believes that the provisions will facilitate, not hinder, the hiring of court personnel who have disabilities. All courtroom work stations will be on accessible routes and will be required to have all fixed elements designed in compliance with the 2010 Standards. Elevated work stations for court employees may be designed to add vertical access as needed. Since the original design must provide the proper space and electrical wiring to install vertical access, the change should be easily accomplished.

232 Detention Facilities and Correctional Facilities

Section 232 of the 2010 Standards establishes requirements for the design and construction of cells, medical care facilities, and visiting areas in detention facilities and in correctional facilities. Section 35.151(k) of the Department's title II rule provides scoping for newly constructed general holding cells and general housing cells requiring mobility features compliant with section 807.2 of the 2010 Standards in a minimum of three percent (3%) of cells, but no fewer than one cell. Section 232.2 of the 2010 Standards provides scoping for newly constructed cells with communications features requiring a minimum of two percent (2%) of cells, but at least one cell, to have communication features.

The Department's title II rule at §35.151(k) also specifies scoping for alterations to detention and correctional facilities. Generally a minimum of three percent (3%), but no fewer than one, of the total number of altered cells must comply with section 807.2 of the 2010 Standards and be provided within each facility. Altered cells with mobility features must be provided in each classification level, including administrative and disciplinary segregation, each use and service area, and special program. The Department notes that the three percent (3%), but no fewer than one, requirement is a minimum. As corrections systems plan for new facilities or alterations, the Department urges planners to include in their population estimates a projection of the numbers of inmates with disabilities so as to have sufficient numbers of accessible cells to meet inmate needs.

233 Residential Facilities

Homeless Shelters, Group Homes, and Similar Social Service Establishments. Section 233 of the 2010 Standards includes specific scoping and technical provisions that apply to new construction and alteration of residential facilities. In the 1991 Standards scoping and technical requirements for homeless shelters, group homes, and similar social service establishments were included in section 9 Transient Lodging. These types of facilities will be covered by section 233 of the 2010 Standards and by 28 CFR 35.151(e) and 36.406(d) and will be subject to requirements for residential facilities rather than the requirements for transient lodging. This approach will harmonize federal accessibility obligations under both the ADA and section 504 of the Rehabilitation Act of 1973, as amended. In sleeping rooms with more than 25 beds that are covered by §36.406(d) a minimum of five percent (5%) of the beds must have clear floor space compliant with section 806.2.3 of the 2010 Standards. In large facilities with more than 50 beds, at least one roll-in shower compliant with section 608.2.2 or section 608.2.3 of the 2010 Standards must be provided. Where separate shower facilities are provided for men and for women, at least one roll-in shower must be provided for each gender.

Housing Operated By or On Behalf of Places of Education. Housing at a place of education includes: Residence halls, dormitories, suites, apartments, or other places of residence operated by or on behalf of places of education. Residence halls or dormitories operated by or on behalf of places of education are covered by the provisions in sections 224 and 806 of the 2010 Standards. The Department has included in the title III rule at §36.406(e) requirements that apply to housing at places of education that clarify requirements for residence halls and dormitories and other types of student housing. Requirements for housing at a place of education covered by the title II rule are included at §35.151(f).

Kitchens and Kitchenettes. Section 4.34.2 of the UFAS requires a clear turning space at least 60 inches in diameter or an equivalent T-shaped turning space in kitchens. Section 4.34.6 requires a clearance between opposing base cabinets, counters, appliances, or walls of at least 40 inches except in a U-shaped kitchen where the minimum clearance is 60 inches.

Section 804 of the 2010 Standards provides technical requirements for kitchens and kitchenettes. Section 804.2.1 requires that pass through kitchens, which have two entries and counters, appliances, or cabinets on two opposite sides or opposite a parallel wall, provide at least 40 inches minimum clearance. Section 804.2.2 requires that U-shaped kitchens, which are enclosed on three continuous sides, provide at least 60 inches minimum clearance between all opposing base cabinets, countertops, appliances, or walls within kitchen work areas. Kitchens that do not have a cooktop or conventional range are exempt from the clearance requirements but still must provide an accessible route.

If a kitchen does not have two entries, the 2010 Standards require the kitchen to have 60 inches minimum clearance between the opposing base cabinets, counters, appliances, or walls.

One commenter supported the provisions of section 804 of the 2010 Standards but sought clarification whether this section applies to residential units only, or to lodging and office buildings as well. Section 212 makes section 804 applicable to all kitchens and kitchenettes in covered buildings.

Residential Facilities. Section 4.1.4(11) of the UFAS contains scoping requirements for the new construction of housing. Under the 1991 title II regulation, state and local governments had the option of complying with the UFAS or the 1991 Standards. After the compliance date for the 2010 Standards, state and local governments will no longer have the option of complying with the UFAS, but will have to use the 2010 Standards for new construction and alterations.

Sections 233.1, 233.2, 233.3, 233.3.1, and 233.3.2 of the 2010 Standards differentiate between entities subject to the United States Department of Housing and Urban Development (HUD) regulations implementing section 504 of the Rehabilitation Act of 1973 and entities not subject to the HUD regulations. The HUD regulations apply to recipients of federal financial assistance through HUD, and require at least five percent (5%) of dwelling units in multi-family projects of five or more dwelling units to provide mobility features and at least two percent (2%) of the dwelling units to provide communication features. The HUD regulations define a project unique to its programs as ''one or more residential structures which are covered by a single contract for federal financial assistance or application for assistance, or are treated as a whole for processing purposes, whether or not located on a common site.'' To avoid any potential conflicts with the HUD regulations, the 2010 Standards require residential dwelling units subject to the HUD regulations to comply with the scoping requirements in the HUD regulations, instead of the scoping requirements in the 2010 Standards.

For entities not subject to the HUD regulations, the 2010 Standards require at least five percent (5%) of the dwelling units in residential facilities to provide mobility features, and at least two percent (2%) of the dwelling units to provide communication features. The 2010 Standards define facilities in terms of buildings located on a site. The 2010 Standards permit facilities that contain 15 or fewer dwelling units to apply the scoping requirements to all the dwelling units that are constructed under a single contract, or are developed as whole, whether or not located on a common site.

Alterations to Residential Facilities. Section 4.1.6 of the UFAS requires federal, state, and local government housing to comply with the general requirements for alterations to facilities. Applying the general requirements for alterations to housing can result in partially accessible dwelling units where single elements or spaces in dwelling units are altered.

The 2010 Standards, at sections 202.3 Exception 3, 202.4, and 233.3, contain specific scoping requirements for alterations to dwelling units. Dwelling units that are not required to be accessible are exempt from the general requirements for alterations to elements and spaces and for alterations to primary function areas.

The scoping requirements for alterations to dwelling units generally are based on the requirements in the UFAS:

• Where a building is vacated for purposes of alterations and has more than 15 dwelling units, at least five percent (5%) of the altered dwelling units are required to provide mobility features and at least two percent (2%) of the dwelling units are required to provide communication features.

• Where a bathroom or a kitchen is substantially altered in an individual dwelling unit and at least one other room is also altered, the dwelling unit is required to comply with the scoping requirements for new construction until the total number of dwelling units in the facility required to provide mobility features and communication features is met.

As with new construction, the 2010 Standards permit facilities that contain 15 or fewer dwelling units to apply the scoping requirements to all the dwelling units that are altered under a single contract, or are developed as a whole, whether or not located on a common site. The 2010 Standards also permit

a comparable dwelling unit to provide mobility features where it is not technically feasible for the altered dwelling unit to comply with the technical requirements.

234 and 1002 Amusement Rides

New and Altered Permanently Installed Amusement Rides. Section 234 of the 2010 Standards sets out scoping requirements and section 1002 sets out the technical requirements for the accessibility of permanently installed amusement rides. These requirements apply to newly designed and constructed amusement rides and used rides when certain alterations are made.

A commenter raised concerns that smaller amusement parks tend to purchase used rides more frequently than new rides, and that the conversion of a used ride to provide the required accessibility may be difficult to ensure because of the possible complications in modifying equipment to provide accessibility.

The Department agrees with this commenter. The Department notes, however, that the 2010 Standards will require modifications to existing amusement rides when a ride's structural and operational characteristics are altered to the extent that the ride's performance differs from that specified by the manufacturer or the original design. Such an extensive alteration to an amusement ride may well require that new load and unload areas be designed and constructed. When load and unload areas serving existing amusement rides are newly designed and constructed they must be level, provide wheelchair turning space, and be on an accessible route compliant with Chapter 4 of the 2010 Standards except as modified by section 1002.2 of the 2010 Standards.

Mobile or Portable Amusement Rides. The exception in section 234.1 of the 2010 Standards exempts mobile or portable amusement rides, such as those set up for short periods of time at carnivals, fairs or festivals, from having to comply with the 2010 Standards. However, even though the mobile/portable ride itself is not subject to the Standards, these facilities are still subject to the ADA's general requirement to ensure that individuals with disabilities have an equal opportunity to enjoy the services and amenities of these facilities.

Subject to these general requirements, mobile or portable amusement rides should be located on an accessible route and the load and unload areas serving a ride should provide a level wheelchair turning space to provide equal opportunity for individuals with disabilities to be able to participate on the amusement ride to the extent feasible.

One commenter noted that the exception in Section 234.1 of the 2010 Standards for mobile or portable amusement rides limits the opportunities of persons with disabilities to participate on amusement rides because traveling or temporary amusement rides by their nature come to their customers' town or a nearby town rather than the customer having to go to them and so are less expensive than permanent amusement parks. While the Department understands the commenter's concerns, the Department notes that most amusement rides are too complex to be reasonably modified or re-engineered to accommodate the majority of individuals with disabilities and that additional complexities and safety concerns are added when the rides are mobile or portable.

A commenter asked that section 234 of the 2010 Standards make clear that the requirements for accessible routes include the routes leading up to and including the loading and unloading areas of amusement rides. Sections 206.2.9 and 1002.2 of the 2010 Standards clarify that the requirements for accessible routes include the routes leading up to and including the loading and unloading areas of amusement rides.

A commenter requested that the final rule specifically allow for wheelchair access through the exit or other routes, or alternate means of wheelchair access routes to amusement rides. The commenter stated that the concept of wheelchair access through the exit or alternate routes was a base assumption for the 2010 Standards. The commenter noted that the concept is apparent in the signage and load/unload area provisions in Section 216.12 (" * * * where accessible unload areas also serve as accessible load areas, signs indicating the location of the accessible load and unload areas shall be provided at entries to queues and waiting lines"). The Department agrees with the commenter that accessible load and unload areas may be the same where signs that comply with section 216.12 are provided.

Wheelchair Space or Transfer Seat or Transfer Device. Sections 234.3 and 1002.4–1002.6 of the 2010 Standards provide that each new and altered amusement ride, except for mobile/portable rides and a few additional excepted rides, will be required to provide at least one type of access by means of one wheelchair space or one transfer seat or one transfer device (the design of the transfer device is not specified).

Commenters urged the Department to revise the requirements for wheelchair spaces and transfer seats and devices because most amusement rides are too complex to be reasonably modified or re-engineered to accommodate the majority of individuals with disabilities. They argued that the experience of amusement rides will be significantly reduced if the proposed requirements are implemented.

The 2004 ADAAG, which the Department adopted as part of the 2010 Standards, was developed with the assistance of an advisory committee that included representation from the design staffs of major amusement

venues and from persons with disabilities. The Department believes that the resulting 2004 ADAAG reflected sensitivity to the complex problems posed in adapting existing rides by focusing on new rides that can be designed from the outset to be accessible.

To permit maximum design flexibility, the 2010 Standards permit designers to determine whether it is more appropriate to permit individuals who use wheelchairs to remain in their chairs on the ride, or to provide for transfer access.

Maneuvering Space in Load and Unload Areas. Sections 234.2 and 1002.3 of the 2010 Standards require that a level wheelchair turning space be provided at the load and unload areas of each amusement ride. The turning space must comply with sections 304.2 and 304.3.

Signs Required at Waiting Lines to Amusement Rides. Section 216.12 of the 2010 Standards requires signs at entries to queues and waiting lines identifying type and location of access for the amusement ride.

235 and 1003 Recreational Boating Facilities

These sections require that accessible boat slips and boarding piers be provided. Most commenters approved of the requirements for recreational boating facility accessibility and urged the Department to keep regulatory language consistent with those provisions. They commented that the requirements appropriately reflect industry conditions. Individual commenters and disability organizations agreed that the 2010 Standards achieve acceptable goals for recreational boating facility access.

Accessible Route. Sections 206.2.10 and 1003.2 of the 2010 Standards require an accessible route to all accessible boating facilities, including boat slips and boarding piers at boat launch ramps. Section 1003.2.1 provides a list of exceptions applicable to structures such as gangways, transition plates, floating piers, and structures containing combinations of these elements that are affected by water level changes. The list of exceptions specifies alternate design requirements applicable to these structures which, because of water level variables, cannot comply with the slope, cross slope, and handrail requirements for fixed ramps contained in sections 403.3, 405.2, 405.3, 405.6, and 405.7 of the 2010 Standards. Exceptions 3 and 4 in Section 1003.2.1, which permit a slope greater than that specified in Section 405.2, are available for structures that meet specified length requirements. Section 206.7.10 permits the use of platform lifts as an alternative to gangways that are part of accessible routes.

Commenters raised concerns that because of water level fluctuations it may be difficult to provide accessible routes to all accessible boating facilities, including boat slips and boarding piers at boat launch ramps. One of the specific concerns expressed by several commenters relates to the limits for running slope permitted on gangways that are part of an accessible route as gangways may periodically have a steeper slope than is permitted for a fixed ramp. The exceptions contained in section 1003.2 of the 2010 Standards modify the requirements of Chapter 4. For example, where the total length of a gangway or series of gangways serving as an accessible route is 80 feet or more an exception permits the slope on gangways to exceed the maximum slope in section 405.2.

Some commenters suggested that permissible slope variations could be reduced further by introducing a formula that ties required gangway length to anticipated water level fluctuations. Such a formula would incorporate predictions of tidal level changes such as those issued by the National Oceanographic and Atmospheric Administration (NOAA) and the United States Geologic Survey (USGS). This suggested approach would be an alternative to the gangway length exceptions and limits in section 1003.2.1 of the 2010 Standards. These commenters noted that contemporary building materials and techniques make gangways of longer length and alternative configurations achievable. These commenters provided at least one example of a regional regulatory authority using this type of formula. While this approach may be successfully implemented and consistent with the goals of the ADA, the example provided was applied in a highly developed area containing larger facilities. The Department has considered that many facilities do not have sufficient resources available to take advantage of the latest construction materials and design innovations. Other commenters supported compliance exceptions for facilities that are subject to extreme tidal conditions. One commenter noted that if a facility is located in an area with limited space and extreme tidal variations, a disproportionately long gangway might intrude into water travel routes. The Department has considered a wide range of boating facility characteristics including size, water surface areas, tidal fluctuations, water conditions, variable resources, whether the facility is in a highly developed or remote location, and other factors. The Department has determined that the 2010 Standards provide sufficient flexibility for such broad application. Additionally, the length requirement for accessible routes in section 1003.2.1 provides an easily determinable compliance standard.

Accessible Boarding Piers. Where boarding piers are provided at boat launch ramps, sections 235.3 and 1003.3.2 of the 2010 Standards require that at least five percent (5%) of boarding piers, but at least one, must be accessible.

Accessible Boat Slips. Sections 235.2 and 1003.3.1 of the 2010 Standards require that a

specified number of boat slips in each recreational boating facility meet specified accessibility standards. The number of accessible boat slips required by the 2010 Standards is set out in a chart in section 235.2. One accessible boat slip is required for facilities containing 25 or fewer total slips. The number of required accessible boat slips increases with the total number of slips at the facility. Facilities containing more than one thousand (1000) boat slips are required to provide twelve (12) accessible boat slips plus one for each additional one hundred slips at the facility.

One commenter asserted the need for specificity in the requirement for dispersion of accessible slips. Section 235.2.1 of the 2010 Standards addresses dispersion and requires that boat slips ''shall be dispersed throughout the various types of boat slips provided.'' The commenter was concerned that if a marina could not put accessible slips all on one pier, it would have to reconstruct the entire facility to accommodate accessible piers, gangways, docks and walkways. The provision permits required accessible boat slips to be grouped together. The Department recognizes that economical and structural feasibility may produce this result. The 2010 Standards do not require the dispersion of the physical location of accessible boat slips. Rather, the dispersion must be among the various types of boat slips offered by the facility. Section 235.2.1 of the 2010 Standards specifies that if the required number has been met, no further dispersion is required. For example, if a facility offers five different 'types' of boat slips but is only required to provide three according to the table in Section 235.2, that facility is not required to provide more than three accessible boat slips, but the three must be varied among the five 'types' of boat slips available at the facility.

236 and 1004 Exercise Machines and Equipment

Accessible Route to Exercise Machines and Equipment. Section 206.2.13 of the 2010 Standards requires an accessible route to serve accessible exercise machines and equipment.

Commenters raised concerns that the requirement to provide accessible routes to serve accessible exercise machines and equipment will be difficult for some facilities to provide, especially some transient lodging facilities that typically locate exercise machines and equipment in a single room. The Department believes that this requirement is a reasonable one in new construction and alterations because accessible exercise machines and equipment can be located so that an accessible route can serve more than one piece of equipment.

Exercise Machines and Equipment. Section 236 of the 2010 Standards requires at least one of each type of exercise machine to meet clear floor space requirements of section 1004.1. Types of machines are generally defined according to the muscular groups exercised or the kind of cardiovascular exercise provided.

Several commenters were concerned that existing facilities would have to reduce the number of available exercise equipment and machines in order to comply with the 2010 Standards. One commenter submitted prototype drawings showing equipment and machine layouts with and without the required clearance specified in the 2010 Standards. The accessible alternatives all resulted in a loss of equipment and machines. However, because these prototype layouts included certain possibly erroneous assumptions about the 2010 Standards, the Department wishes to clarify the requirements.

Section 1004.1 of the 2010 Standards requires a clear floor space ''positioned for transfer or for use by an individual seated in a wheelchair'' to serve at least one of each type of exercise machine and equipment. This requirement provides the designer greater flexibility regarding the location of the clear floor space than was employed by the commenter who submitted prototype layouts. The 2010 Standards do not require changes to exercise machines or equipment in order to make them more accessible to persons with disabilities. Even where machines or equipment do not have seats and typically are used by individuals in a standing position, at least one of each type of machine or equipment must have a clear floor space. Therefore, it is reasonable to assume that persons with disabilities wishing to use this type of machine or equipment can stand or walk, even if they use wheelchairs much of the time. As indicated in Advisory 1004.1, ''the position of the clear floor space may vary greatly depending on the use of the equipment or machine.'' Where exercise equipment or machines require users to stand on them, the clear floor space need not be located parallel to the length of the machine or equipment in order to provide a lateral seat-to-platform transfer. It is permissible to locate the clear floor space for such machines or equipment in the aisle behind the device and to overlap the clear floor space and the accessible route.

Commenters were divided in response to the requirement for accessible exercise machines and equipment. Some supported requirements for accessible machines and equipment; others urged the Department not to require accessible machines and equipment because of the costs involved. The Department believes that the requirement strikes an appropriate balance in ensuring that persons with disabilities, particularly those who use wheelchairs, will have the opportunity to use the exercise equipment. Providing access to exercise machines and equipment recognizes the need and desires of

individuals with disabilities to have the same opportunity as other patrons to enjoy the advantages of exercise and maintaining health.

237 and 1005 Fishing Piers and Platforms

Accessible Route. Sections 206.2.14 and 1005.1 of the 2010 Standards require an accessible route to each accessible fishing pier and platform. The exceptions described under Recreational Boating above also apply to gangways and floating piers. All commenters supported the requirements for accessible routes to fishing piers and platforms.

Accessible Fishing Piers and Platforms. Sections 237 and 1005 of the 2010 Standards require at least twenty-five percent (25%) of railings, guards, or handrails (if provided) to be at a 34-inch maximum height (so that a person seated in a wheelchair can cast a fishing line over the railing) and to be located in a variety of locations on the fishing pier or platform to give people a variety of locations to fish. An exception allows a guard required to comply with the IBC to have a height greater than 34 inches. If railings, guards, or handrails are provided, accessible edge protection and clear floor or ground space at accessible railings are required. Additionally, at least one turning space complying with section 304.3 of the 2010 Standards is required to be provided on fishing piers and platforms.

Commenters expressed concerns about the provision for fishing piers and platforms at the exception in section 1005.2.1 of the 2010 Standards that allows a maximum height of 42 inches for a guard when the pier or platform is covered by the IBC. Two commenters stated that allowing a 42-inch guard or railing height for facilities covered by another building code would be difficult to enforce. They also thought that this would hinder access for persons with disabilities because the railing height would be too high for a person seated in a wheelchair to reach over with their fishing pole in order to fish. The Department understands these concerns but believes that the railing height exception is necessary in order to avoid confusion resulting from conflicting accessibility requirements, and therefore has retained this exception.

238 and 1006 Golf Facilities

Accessible Route. Sections 206.2.15, 1006.2, and 1006.3 of the 2010 Standards require an accessible route to connect all accessible elements within the boundary of the golf course and, in addition, to connect golf car rental areas, bag drop areas, teeing grounds, putting greens, and weather shelters. An accessible route also is required to connect any practice putting greens, practice teeing grounds, and teeing stations at driving ranges that are required to be accessible. An exception permits the accessible route requirements to be met, within the boundaries of the golf course, by providing a ''golf car passage'' (the path typically used by golf cars) if specifications for width and curb cuts are met.

Most commenters expressed the general viewpoint that nearly all golf courses provide golf cars and have either well-defined paths or permit the cars to drive on the course where paths are not present, and thus meet the accessible route requirement.

The Department received many comments requesting clarification of the term ''golf car passage.'' Some commenters recommended additional regulatory language specifying that an exception from a pedestrian route requirement should be allowed only when a golf car passage provides unobstructed access onto the teeing ground, putting green, or other accessible element of the course so that an accessible golf car can have full access to those elements. These commenters cautioned that full and equal access would not be provided if a golfer were required to navigate a steep slope up or down a hill or a flight of stairs in order to get to the teeing ground, putting green, or other accessible element of the course.

Conversely, another commenter requesting clarification of the term ''golf car passage'' argued that golf courses typically do not provide golf car paths or pedestrian paths up to actual tee grounds or greens, many of which are higher or lower than the car path. This commenter argued that if golf car passages were required to extend onto teeing grounds and greens in order to qualify for an exception, then some golf courses would have to substantially regrade teeing grounds and greens at a high cost.

Some commenters argued that older golf courses, small nine-hole courses, and executive courses that do not have golf car paths would be unable to comply with the accessible route requirements because of the excessive cost involved. A commenter noted that, for those older courses that have not yet created an accessible pedestrian route or golf car passage, the costs and impacts to do so should be considered.

A commenter argued that an accessible route should not be required where natural terrain makes it infeasible to create an accessible route. Some commenters cautioned that the 2010 Standards would jeopardize the integrity of golf course designs that utilize natural terrain elements and elevation changes to set up shots and create challenging golf holes.

The Department has given careful consideration to the comments and has decided to adopt the 2010 Standards requiring that at least one accessible route connect accessible elements and spaces within the boundary of the golf course including teeing grounds, putting greens, and weather shelters, with an exception provided that golf car passages

shall be permitted to be used for all or part of required accessible routes. In response to requests for clarification of the term ''golf car passage,'' the Department points out that golf car passage is merely a pathway on which a motorized golf car can operate and includes identified or paved paths, teeing grounds, fairways, putting greens, and other areas of the course. Golf cars cannot traverse steps and exceedingly steep slopes. A nine-hole golf course or an executive golf course that lacks an identified golf car path but provides golf car passage to teeing grounds, putting greens, and other elements throughout the course may utilize the exception for all or part of the accessible pedestrian route. The exception in section 206.2.15 of the 2010 Standards does not exempt golf courses from their obligation to provide access to necessary elements of the golf course; rather, the exception allows a golf course to use a golf car passage for part or all of the accessible pedestrian route to ensure that persons with mobility disabilities can fully and equally participate in the recreational activity of playing golf.

Accessible Teeing Grounds, Putting Greens, and Weather Shelters. Sections 238.2 and 1006.4 of the 2010 Standards require that golf cars be able to enter and exit each putting green and weather shelter. Where two teeing grounds are provided, the forward teeing ground is required to be accessible (golf car can enter and exit). Where three or more teeing grounds are provided, at least two, including the forward teeing ground, must be accessible.

A commenter supported requirements for teeing grounds, particularly requirements for accessible teeing grounds, noting that accessible teeing grounds are essential to the full and equal enjoyment of the golfing experience.

A commenter recommended that existing golf courses be required to provide access to only one teeing ground per hole. The majority of commenters reported that most public and private golf courses already provide golf car passage to teeing grounds and greens. The Department has decided that it is reasonable to maintain the requirement. The 2010 Standards provide an exception for existing golf courses with three or more teeing grounds not to provide golf car passage to the forward teeing ground where terrain makes such passage infeasible.

Section 1006.3.2 of the 2010 Standards requires that where curbs or other constructed barriers prevent golf cars from entering a fairway, openings 60 inches wide minimum shall be provided at intervals not to exceed 75 yards.

A commenter disagreed with the requirement that openings 60 inches wide minimum be installed at least every 75 yards, arguing that a maximum spacing of 75 yards may not allow enough flexibility for terrain and hazard placements. To resolve this problem, the commenter recommended that the standards be modified to require that each golf car passage include one 60-inch wide opening for an accessible golf car to reach the tee, and that one opening be provided where necessary for an accessible golf car to reach a green. The requirement for openings where curbs or other constructed barriers may otherwise prevent golf cars from entering a fairway allows the distance between openings to be less than every 75 yards. Therefore, the Department believes that the language in section 1006.3.2 of the 2010 Standards allows appropriate flexibility. Where a paved path with curbs or other constructed barrier exists, the Department believes that it is essential that openings be provided to enable golf car passages to access teeing grounds, fairways and putting greens, and other required elements. Golf car passage is not restricted to a paved path with curbs. Golf car passage also includes fairways, teeing grounds, putting greens, and other areas on which golf cars operate.

Accessible Practice Putting Greens, Practice Teeing Grounds, and Teeing Stations at Driving Ranges. Section 238.3 of the 2010 Standards requires that five percent (5%) but at least one of each of practice putting greens, practice teeing grounds, and teeing stations at driving ranges must permit golf cars to enter and exit.

239 and 1007 Miniature Golf Facilities

Accessible Route to Miniature Golf Course Holes. Sections 206.2.16, 239.3, and 1007.2 of the 2010 Standards require an accessible route to connect accessible miniature golf course holes and the last accessible hole on the course directly to the course entrance or exit. Accessible holes are required to be consecutive with an exception permitting one break in the sequence of consecutive holes provided that the last hole on the miniature golf course is the last hole in the sequence.

Many commenters supported expanding the exception from one to multiple breaks in the sequence of accessible holes. One commenter noted that permitting accessible holes with breaks in sequence would enable customers with disabilities to enjoy the landscaping, water and theme elements of the miniature golf course. Another commenter wrote in favor of allowing multiple breaks in accessible holes with a connecting accessible route.

Other commenters objected to allowing multiple breaks in the sequence of miniature golf holes. Commenters opposed to this change argued that allowing any breaks in the sequence of accessible holes at a miniature golf course would disrupt the flow of play for persons with disabilities and create a less socially integrated experience. A commenter noted that multiple breaks in sequence would not necessarily guarantee the

provision of access to holes that are most representative of those with landscaping, water elements, or a fantasy-like experience.

The Department has decided to retain the exception without change. Comments did not provide a sufficient basis on which to conclude that allowing multiple breaks in the sequence of accessible holes would necessarily increase integration of accessible holes with unique features of miniature golf courses. Some designs of accessible holes with multiple breaks in the sequence might provide equivalent facilitation where persons with disabilities gain access to landscaping, water or theme elements not otherwise represented in a consecutive configuration of accessible holes. A factor that might contribute to equivalent facilitation would be an accessible route designed to bring persons with disabilities to a unique feature, such as a waterfall, that would otherwise not be served by an accessible route connecting consecutive accessible holes.

Specified exceptions are permitted for accessible route requirements when located on the playing surfaces near holes.

Accessible Miniature Golf Course Holes. Sections 239.2 and 1007.3 of the 2010 Standards require at least fifty percent (50%) of golf holes on miniature golf courses to be accessible, including providing a clear floor or ground space that is 48 inches minimum by 60 inches minimum with slopes not steeper than 1:48 at the start of play.

240 and 1008 Play Areas

Section 240 of the 2010 Standards provides scoping for play areas and section 1008 provides technical requirements for play areas. Section 240.1 of the 2010 Standards sets requirements for play areas for children ages 2 and over and covers separate play areas within a site for specific age groups. Section 240.1 also provides four exceptions to the requirements that apply to family child care facilities, relocation of existing play components in existing play areas, amusement attractions, and alterations to play components where the ground surface is not altered.

Ground Surfaces. Section 1008.2.6 of the 2010 Standards provides technical requirements for accessible ground surfaces for play areas on accessible routes, clear floor or ground spaces, and turning spaces. These ground surfaces must follow special rules, incorporated by reference from nationally recognized standards for accessibility and safety in play areas, including those issued by the American Society for Testing and Materials (ASTM).

A commenter recommended that the Department closely examine the requirements for ground surfaces at play areas. The Department is aware that there is an ongoing controversy about play area ground surfaces arising from a concern that some surfaces that meet the ASTM requirements at the time of installation will become inaccessible if they do not receive constant maintenance. The Access Board is also aware of this issue and is working to develop a portable field test that will provide more relevant information on installed play surfaces. The Department would caution covered entities selecting among the ground surfacing materials that comply with the ASTM requirements that they must anticipate the maintenance costs that will be associated with some of the products. Permitting a surface to deteriorate so that it does not meet the 2010 Standards would be an independent violation of the Department's ADA regulations.

Accessible Route to Play Components. Section 206.2.17 of the 2010 Standards provides scoping requirements for accessible routes to ground level and elevated play components and to soft contained play structures. Sections 240.2 and 1008 of the 2010 Standards require that accessible routes be provided for play components. The accessible route must connect to at least one ground level play component of each different type provided (e.g., for different experiences such as rocking, swinging, climbing, spinning, and sliding). Table 240.2.1.2 sets requirements for the number and types of ground level play components required to be on accessible routes. When elevated play components are provided, an accessible route must connect at least fifty percent (50%) of the elevated play components. Section 240.2.1.2, provides an exception to the requirements for ground level play components if at least fifty percent (50%) of the elevated play components are connected by a ramp and at least three of the elevated play components connected by the ramp are different types of play components.

The technical requirements at section 1008 include provisions where if three or fewer entry points are provided to a soft contained play structure, then at least one entry point must be on an accessible route. In addition, where four or more entry points are provided to a soft contained play structure, then at least two entry points must be served by an accessible route.

If elevated play components are provided, fifty percent (50%) of the elevated components are required to be accessible. Where 20 or more elevated play components are provided, at least twenty five percent (25%) will have to be connected by a ramp. The remaining play components are permitted to be connected by a transfer system. Where less than 20 elevated play components are provided, a transfer system is permitted in lieu of a ramp.

A commenter noted that the 2010 Standards allow for the provision of transfer steps to elevated play structures based on the

number of elevated play activities, but asserted that transfer steps have not been documented as an effective means of access.

The 2010 Standards recognize that play structures are designed to provide unique experiences and opportunities for children. The 2010 Standards provide for play components that are accessible to children who cannot transfer from their wheelchair, but they also provide opportunities for children who are able to transfer. Children often interact with their environment in ways that would be considered inappropriate for adults. Crawling and climbing, for example, are integral parts of the play experience for young children. Permitting the use of transfer platforms in play structures provides some flexibility for creative playground design.

Accessible Play Components. Accessible play components are required to be on accessible routes, including elevated play components that are required to be connected by ramps. These play components must also comply with other accessibility requirements, including specifications for clear floor space and seat heights (where provided).

A commenter expressed concerns that the general requirements of section 240.2.1 of the 2010 Standards and the advisory accompanying section 240.2.1 conflict. The comment asserts that section 240.2.1 of the 2010 Standards provides that the only requirement for integration of equipment is where there are two or more required ground level play components, while the advisory appears to suggest that all accessible components must be integrated.

The commenter misinterprets the requirement. The ADA mandates that persons with disabilities be able to participate in programs or activities in the most integrated setting appropriate to their needs. Therefore, all accessible play components must be integrated into the general playground setting. Section 240.2.1 of the 2010 Standards specifies that where there is more than one accessible ground level play component, the components must be both dispersed and integrated.

241 and 612 Saunas and Steam Rooms

Section 241 of the 2010 Standards sets scoping for saunas and steam rooms and section 612 sets technical requirements including providing accessible turning space and an accessible bench. Doors are not permitted to swing into the clear floor or ground space for the accessible bench. The exception in section 612.2 of the 2010 Standards permits a readily removable bench to obstruct the required wheelchair turning space and the required clear floor or ground space. Where they are provided in clusters, five percent (5%) but at least one sauna or steam room in each cluster must be accessible.

Commenters raised concerns that the safety of individuals with disabilities outweighs the usefulness in providing accessible saunas and steam rooms. The Department believes that there is an element of risk in many activities available to the general public. One of the major tenets of the ADA is that individuals with disabilities should have the same opportunities as other persons to decide what risks to take. It is not appropriate for covered entities to prejudge the abilities of persons with disabilities.

242 and 1009 Swimming Pools, Wading Pools, and Spas

Accessible Means of Entry to Pools. Section 242 of the 2010 Standards requires at least two accessible means of entry for larger pools (300 or more linear feet) and at least one accessible entry for smaller pools. This section requires that at least one entry will have to be a sloped entry or a pool lift; the other could be a sloped entry, pool lift, a transfer wall, or a transfer system (technical specifications for each entry type are included at section 1009).

Many commenters supported the scoping and technical requirements for swimming pools. Other commenters stated that the cost of requiring facilities to immediately purchase a pool lift for each indoor and outdoor swimming pool would be very significant especially considering the large number of swimming pools at lodging facilities. One commenter requested that the Department clarify what would be an ''alteration'' to a swimming pool that would trigger the obligation to comply with the accessible means of entry in the 2010 Standards.

Alterations are covered by section 202.3 of the 2010 Standards and the definition of ''alteration'' is provided at section 106.5. A physical change to a swimming pool which affects or could affect the usability of the pool is considered to be an alteration. Changes to the mechanical and electrical systems, such as filtration and chlorination systems, are not alterations. Exception 2 to section 202.3 permits an altered swimming pool to comply with applicable requirements to the maximum extent feasible if full compliance is technically infeasible. ''Technically infeasible'' is also defined in section 106.5 of the 2010 Standards.

The Department also received comments suggesting that it is not appropriate to require two accessible means of entry to wave pools, lazy rivers, sand bottom pools, and other water amusements where there is only one point of entry. Exception 2 of Section 242.2 of the 2010 Standards exempts pools of this type from having to provide more than one accessible means of entry provided that the one accessible means of entry is a swimming pool lift compliant with section 1009.2, a sloped entry compliant with section 1009.3, or a transfer system compliant with section 1009.5 of the 2010 Standards.

Accessible Means of Entry to Wading Pools. Sections 242.3 and 1009.3 of the 2010 Standards

require that at least one sloped means of entry is required into the deepest part of each wading pool.

Accessible Means of Entry to Spas. Sections 242.4 and 1009.2, 1009.4, and 1009.5 of the 2010 Standards require spas to meet accessibility requirements, including an accessible means of entry. Where spas are provided in clusters, five percent (5%) but at least one spa in each cluster must be accessible. A pool lift, a transfer wall, or a transfer system will be permitted to provide the required accessible means of entry.

243 Shooting Facilities with Firing Positions

Sections 243 and 1010 of the 2010 Standards require an accessible turning space for each different type of firing position at a shooting facility if designed and constructed on a site. Where firing positions are provided in clusters, five percent (5%), but at least one position of each type in each cluster must be accessible.

Additional Technical Requirements

302.1 Floor or Ground Surfaces

Both section 4.5.1 of the 1991 Standards and section 302.2 of the 2010 Standards require that floor or ground surfaces along accessible routes and in accessible rooms and spaces be stable, firm, slip-resistant, and comply with either section 4.5 in the case of the 1991 Standards or section 302 in the case of the 2010 Standards.

Commenters recommended that the Department apply an ASTM Standard (with modifications) to assess whether a floor surface is ''slip resistant'' as required by section 302.1 of the 2010 Standards. The Department declines to accept this recommendation since, currently, there is no generally accepted test method for the slip-resistance of all walking surfaces under all conditions.

304 Turning Space

Section 4.2.3 of the 1991 Standards and Section 304.3 of the 2010 Standards allow turning space to be either a circular space or a T-shaped space. Section 304.3 permits turning space to include knee and toe clearance complying with section 306. Section 4.2.3 of the 1991 Standards did not specifically permit turning space to include knee and toe clearance. Commenters urged the Department to retain the turning space requirement, but exclude knee and toe clearance from being permitted as part of this space. They argued that wheelchairs and other mobility devices are becoming larger and that more individuals with disabilities are using electric three and four-wheeled scooters which cannot utilize knee clearance.

The Department recognizes that the technical specifications for T-shaped and circular turning spaces in the 1991 and 2010 Standards, which are based on manual wheelchair dimensions, may not adequately meet the needs of individuals using larger electric scooters. However, there is no consensus about the appropriate dimension on which to base revised requirements. The Access Board is conducting research to study this issue in order to determine if new requirements are warranted. For more information, see the Access Board's Web site at *http://www.access-board.gov/research/current-projects.htm#suny*. The Department plans to wait for the results of this study and action by the Access Board before considering any changes to the Department's rules. Covered entities may wish to consider providing more than the minimum amount of turning space in confined spaces where a turn will be required. Appendix section A4.2.3 and Fig. A2 of the 1991 Standards provide guidance on additional space for making a smooth turn without bumping into surrounding objects.

404 Doors, Doorways, and Gates

Automatic Door Break Out Openings. The 1991 Standards do not contain any technical requirement for automatic door break out openings. The 2010 Standards at sections 404.1, 404.3, 404.3.1, and 404.3.6 require automatic doors that are part of a means of egress and that do not have standby power to have a 32-inch minimum clear break out opening when operated in emergency mode. The minimum clear opening width for automatic doors is measured with all leaves in the open position. Automatic bi-parting doors or pairs of swinging doors that provide a 32-inch minimum clear break out opening in emergency mode when both leaves are opened manually meet the technical requirement. Section 404.3.6 of the 2010 Standards includes an exception that exempts automatic doors from the technical requirement for break out openings when accessible manual swinging doors serve the same means of egress.

Maneuvering Clearance or Standby Power for Automatic Doors. Section 4.13.6 of the 1991 Standards does not require maneuvering clearance at automatic doors. Section 404.3.2 of the 2010 Standards requires automatic doors that serve as an accessible means of egress to either provide maneuvering clearance or to have standby power to operate the door in emergencies. This provision has limited application and will affect, among others, in-swinging automatic doors that serve small spaces.

Commenters urged the Department to reconsider provisions that would require maneuvering clearance or standby power for automatic doors. They assert that these requirements would impose unreasonable financial and administrative burdens on all

covered entities, particularly smaller entities. The Department declines to change these provisions because they are fundamental life-safety issues. The requirement applies only to doors that are part of a means of egress that must be accessible in an emergency. If an emergency-related power failure prevents the operation of the automatic door, a person with a disability could be trapped unless there is either adequate maneuvering room to open the door manually or a back-up power source.

Thresholds at Doorways. The 1991 Standards, at section 4.13.8, require the height of thresholds at doorways not to exceed ½ inch and thresholds at exterior sliding doors not to exceed ¾ inch. Sections 404.1 and 404.2.5 of the 2010 Standards require the height of thresholds at all doorways that are part of an accessible route not to exceed ½ inch. The 1991 Standards and the 2010 Standards require raised thresholds that exceed ¼ inch in height to be beveled on each side with a slope not steeper than 1:2. The 2010 Standards include an exception that exempts existing and altered thresholds that do not exceed ¾ inch in height and are beveled on each side from the requirement.

505 Handrails

The 2010 Standards add a new technical requirement at section 406.3 for handrails along walking surfaces.

The 1991 Standards, at sections 4.8.5, 4.9.4, and 4.26, and the 2010 Standards, at section 505, contain technical requirements for handrails. The 2010 Standards provide more flexibility than the 1991 Standards as follows:

• Section 4.26.4 of the 1991 Standards requires handrail gripping surfaces to have edges with a minimum radius of ⅛ inch. Section 505.8 of the 2010 Standards requires handrail gripping surfaces to have rounded edges.

• Section 4.26.2 of the 1991 Standards requires handrail gripping surfaces to have a diameter of 1¼ inches to 1½ inches, or to provide an equivalent gripping surface. Section 505.7 of the 2010 Standards requires handrail gripping surfaces with a circular cross section to have an outside diameter of 1¼ inches to 2 inches. Handrail gripping surfaces with a non-circular cross section must have a perimeter dimension of 4 inches to 6¼ inches, and a cross section dimension of 2¼ inches maximum.

• Sections 4.8.5 and 4.9.4 of the 1991 Standards require handrail gripping surfaces to be continuous, and to be uninterrupted by newel posts, other construction elements, or obstructions. Section 505.3 of the 2010 Standards sets technical requirements for continuity of gripping surfaces. Section 505.6 requires handrail gripping surfaces to be continuous along their length and not to be obstructed along their tops or sides. The bottoms of handrail gripping surfaces must not be obstructed for more than twenty percent (20%) of their length. Where provided, horizontal projections must occur at least 1½ inches below the bottom of the handrail gripping surface. An exception permits the distance between the horizontal projections and the bottom of the gripping surface to be reduced by ⅛ inch for each ½ inch of additional handrail perimeter dimension that exceeds 4 inches.

• Section 4.9.4 of the 1991 Standards requires handrails at the bottom of stairs to continue to slope for a distance of the width of one tread beyond the bottom riser nosing and to further extend horizontally at least 12 inches. Section 505.10 of the 2010 Standards requires handrails at the bottom of stairs to extend at the slope of the stair flight for a horizontal distance at least equal to one tread depth beyond the last riser nosing. Section 4.1.6(3) of the 1991 Standards has a special technical provision for alterations to existing facilities that exempts handrails at the top and bottom of ramps and stairs from providing full extensions where it will be hazardous due to plan configuration. Section 505.10 of the 2010 Standards has a similar exception that applies in alterations.

A commenter noted that handrail extensions are currently required at the top and bottom of stairs, but the proposed regulations do not include this requirement, and urged the Department to retain the current requirement. Other commenters questioned the need for the extension at the bottom of stairs.

Sections 505.10.2 and 505.10.3 of the 2010 Standards require handrail extensions at both the top and bottom of a flight of stairs. The requirement in the 1991 Standards that handrails extend horizontally at least 12 inches beyond the width of one tread at the bottom of a stair was changed in the 2004 ADAAG by the Access Board in response to public comments. Existing horizontal handrail extensions that comply with 4.9.4(2) of the 1991 Standards should meet or exceed the requirements of the 2010 Standards.

Commenters noted that the 2010 Standards will require handrail gripping surfaces with a circular cross section to have an outside diameter of 2 inches, and that this requirement would impose a physical barrier to individuals with disabilities who need the handrail for stability and support while accessing stairs.

The requirement permits an outside diameter of 1¼ inches to 2 inches. This range allows flexibility in meeting the needs of individuals with disabilities and designers and architects. The Department is not aware of any data indicating that an outside diameter of 2 inches would pose any adverse impairment to use by individuals with disabilities.

Handrails Along Walkways. The 1991 Standards do not contain any technical requirement for handrails provided along walkways

that are not ramps. Section 403.6 of the 2010 Standards specifies that where handrails are provided along walkways that are not ramps, they shall comply with certain technical requirements. The change is expected to have minimal impact.

[AG Order No. 3181–2010, 75 FR 56317, Sept. 15, 2010]

APPENDIX C TO PART 36—GUIDANCE ON ADA REGULATION ON NONDISCRIMINATION ON THE BASIS OF DISABILITY BY PUBLIC ACCOMMODATIONS AND IN COMMERCIAL FACILITIES ORIGINALLY PUBLISHED ON JULY 26, 1991

NOTE: For the convenience of the reader, this appendix contains the text of the preamble to the final regulation on nondiscrimination on the basis of disability by public accommodations and in commercial facilities beginning at the heading ''Section-by-Section Analysis and Response to Comments'' and ending before ''List of Subjects in 28 CFR part 36'' (56 FR 35546, July 26, 1991).

SECTION-BY-SECTION ANALYSIS AND RESPONSE TO COMMENTS

Subpart A—General

Section 36.101 Purpose

Section 36.101 states the purpose of the rule, which is to effectuate title III of the Americans with Disabilities Act of 1990. This title prohibits discrimination on the basis of disability by public accommodations, requires places of public accommodation and commercial facilities to be designed, constructed, and altered in compliance with the accessibility standards established by this part, and requires that examinations or courses related to licensing or certification for professional or trade purposes be accessible to persons with disabilities.

Section 36.102 Application

Section 36.102 specifies the range of entities and facilities that have obligations under the final rule. The rule applies to any public accommodation or commercial facility as those terms are defined in §36.104. It also applies, in accordance with section 309 of the ADA, to private entities that offer examinations or courses related to applications, licensing, certification, or credentialing for secondary or postsecondary education, professional, or trade purposes. Except as provided in §36.206, ''Retaliation or coercion,'' this part does not apply to individuals other than public accommodations or to public entities. Coverage of private individuals and public entities is discussed in the preamble to §36.206.

As defined in §36.104, a public accommodation is a private entity that owns, leases or leases to, or operates a place of public accommodation. Section 36.102(b)(2) emphasizes that the general and specific public accommodations requirements of subparts B and C obligate a public accommodation only with respect to the operations of a place of public accommodation. This distinction is drawn in recognition of the fact that a private entity that meets the regulatory definition of public accommodation could also own, lease or lease to, or operate facilities that are not places of public accommodation. The rule would exceed the reach of the ADA if it were to apply the public accommodations requirements of subparts B and C to the operations of a private entity that do not involve a place of public accommodation. Similarly, §36.102(b)(3) provides that the new construction and alterations requirements of subpart D obligate a public accommodation only with respect to facilities used as, or designed or constructed for use as, places of public accommodation or commercial facilities.

On the other hand, as mandated by the ADA and reflected in §36.102(c), the new construction and alterations requirements of subpart D apply to a commercial facility whether or not the facility is a place of public accommodation, or is owned, leased, leased to, or operated by a public accommodation.

Section 36.102(e) states that the rule does not apply to any private club, religious entity, or public entity. Each of these terms is defined in §36.104. The exclusion of private clubs and religious entities is derived from section 307 of the ADA; and the exclusion of public entities is based on the statutory definition of public accommodation in section 301(7) of the ADA, which excludes entities other than private entities from coverage under title III of the ADA.

Section 36.103 Relationship to Other Laws

Section 36.103 is derived from sections 501 (a) and (b) of the ADA. Paragraph (a) provides that, except as otherwise specifically provided by this part, the ADA is not intended to apply lesser standards than are required under title V of the Rehabilitation Act of 1973, as amended (29 U.S.C. 790–794), or the regulations implementing that title. The standards of title V of the Rehabilitation Act apply for purposes of the ADA to the extent that the ADA has not explicitly adopted a different standard from title V. Where the ADA explicitly provides a different standard from section 504, the ADA standard applies to the ADA, but not to section 504. For example, section 504 requires that all federally assisted programs and activities be readily accessible to and usable by individuals with

handicaps, even if major structural alterations are necessary to make a program accessible. Title III of the ADA, in contrast, only requires alterations to existing facilities if the modifications are ''readily achievable,'' that is, able to be accomplished easily and without much difficulty or expense. A public accommodation that is covered under both section 504 and the ADA is still required to meet the ''program accessibility'' standard in order to comply with section 504, but would not be in violation of the ADA unless it failed to make ''readily achievable'' modifications. On the other hand, an entity covered by the ADA is required to make ''readily achievable'' modifications, even if the program can be made accessible without any architectural modifications. Thus, an entity covered by both section 504 and title III of the ADA must meet both the ''program accessibility'' requirement and the ''readily achievable'' requirement.

Paragraph (b) makes explicit that the rule does not affect the obligation of recipients of Federal financial assistance to comply with the requirements imposed under section 504 of the Rehabilitation Act of 1973.

Paragraph (c) makes clear that Congress did not intend to displace any of the rights or remedies provided by other Federal laws or other State or local laws (including State common law) that provide greater or equal protection to individuals with disabilities. A plaintiff may choose to pursue claims under a State law that does not confer greater substantive rights, or even confers fewer substantive rights, if the alleged violation is protected under the alternative law and the remedies are greater. For example, assume that a person with a physical disability seeks damages under a State law that allows compensatory and punitive damages for discrimination on the basis of physical disability, but does not allow them on the basis of mental disability. In that situation, the State law would provide narrower coverage, by excluding mental disabilities, but broader remedies, and an individual covered by both laws could choose to bring an action under both laws. Moreover, State tort claims confer greater remedies and are not preempted by the ADA. A plaintiff may join a State tort claim to a case brought under the ADA. In such a case, the plaintiff must, of course, prove all the elements of the State tort claim in order to prevail under that cause of action.

A commenter had concerns about privacy requirements for banking transactions using telephone relay services. Title IV of the Act provides adequate protections for ensuring the confidentiality of communications using the relay services. This issue is more appropriately addressed by the Federal Communications Commission in its regulation implementing title IV of the Act.

Section 36.104 Definitions

''Act.'' The word ''Act'' is used in the regulation to refer to the Americans with Disabilities Act of 1990, Pub. L. 101–336, which is also referred to as the ''ADA.''

''Commerce.'' The definition of ''commerce'' is identical to the statutory definition provided in section 301(l) of the ADA. It means travel, trade, traffic, commerce, transportation, or communication among the several States, between any foreign country or any territory or possession and any State, or between points in the same State but through another State or foreign country. Commerce is defined in the same manner as in title II of the Civil Rights Act of 1964, which prohibits racial discrimination in public accommodations.

The term ''commerce'' is used in the definition of ''place of public accommodation.'' According to that definition, one of the criteria that an entity must meet before it can be considered a place of public accommodation is that its operations affect commerce. The term ''commerce'' is similarly used in the definition of ''commercial facility.''

The use of the phrase ''operations affect commerce'' applies the full scope of coverage of the Commerce Clause of the Constitution in enforcing the ADA. The Constitution gives Congress broad authority to regulate interstate commerce, including the activities of local business enterprises (e.g., a physician's office, a neighborhood restaurant, a laundromat, or a bakery) that affect interstate commerce through the purchase or sale of products manufactured in other States, or by providing services to individuals from other States. Because of the integrated nature of the national economy, the ADA and this final rule will have extremely broad application.

''Commercial facilities'' are those facilities that are intended for nonresidential use by a private entity and whose operations affect commerce. As explained under §36.401, ''New construction,'' the new construction and alteration requirements of subpart D of the rule apply to all commercial facilities, whether or not they are places of public accommodation. Those commercial facilities that are not places of public accommodation are not subject to the requirements of subparts B and C (e.g., those requirements concerning auxiliary aids and general nondiscrimination provisions).

Congress recognized that the employees within commercial facilities would generally be protected under title I (employment) of the Act. However, as the House Committee on Education and Labor pointed out, ''[t]o the extent that new facilities are built in a manner that make[s] them accessible to all individuals, including potential employees,

there will be less of a need for individual employers to engage in reasonable accommodations for particular employees.'' H.R. Rep. No. 485, 101st Cong., 2d Sess., pt. 2, at 117 (1990) [hereinafter ''Education and Labor report'']. While employers of fewer than 15 employees are not covered by title I's employment discrimination provisions, there is no such limitation with respect to new construction covered under title III. Congress chose not to so limit the new construction provisions because of its desire for a uniform requirement of accessibility in new construction, because accessibility can be accomplished easily in the design and construction stage, and because future expansion of a business or sale or lease of the property to a larger employer or to a business that is a place of public accommodation is always a possibility.

The term ''commercial facilities'' is not intended to be defined by dictionary or common industry definitions. Included in this category are factories, warehouses, office buildings, and other buildings in which employment may occur. The phrase, ''whose operations affect commerce,'' is to be read broadly, to include all types of activities reached under the commerce clause of the Constitution.

Privately operated airports are also included in the category of commercial facilities. They are not, however, places of public accommodation because they are not terminals used for ''specified public transportation.'' (Transportation by aircraft is specifically excluded from the statutory definition of ''specified public transportation.'') Thus, privately operated airports are subject to the new construction and alteration requirements of this rule (subpart D) but not to subparts B and C. (Airports operated by public entities are covered by title II of the Act.) Places of public accommodation located within airports, such as restaurants, shops, lounges, or conference centers, however, are covered by subparts B and C of this part.

The statute's definition of ''commercial facilities'' specifically includes only facilities ''that are intended for nonresidential use'' and specifically exempts those facilities that are covered or expressly exempted from coverage under the Fair Housing Act of 1968, as amended (42 U.S.C. 3601–3631). The interplay between the Fair Housing Act and the ADA with respect to those facilities that are ''places of public accommodation'' was the subject of many comments and is addressed in the preamble discussion of the definition of ''place of public accommodation.''

''Current illegal use of drugs.'' The phrase ''current illegal use of drugs'' is used in § 36.209. Its meaning is discussed in the preamble for that section.

''Disability.'' The definition of the term ''disability'' is comparable to the definition of the term ''individual with handicaps'' in section 7(8)(B) of the Rehabilitation Act and section 802(h) of the Fair Housing Act. The Education and Labor Committee report makes clear that the analysis of the term ''individual with handicaps'' by the Department of Health, Education, and Welfare in its regulations implementing section 504 (42 FR 22685 (May 4, 1977)) and the analysis by the Department of Housing and Urban Development in its regulation implementing the Fair Housing Amendments Act of 1988 (54 FR 3232 (Jan. 23, 1989)) should also apply fully to the term ''disability'' (Education and Labor report at 50).

The use of the term ''disability'' instead of ''handicap'' and the term ''individual with a disability'' instead of ''individual with handicaps'' represents an effort by the Congress to make use of up-to-date, currently accepted terminology. The terminology applied to individuals with disabilities is a very significant and sensitive issue. As with racial and ethnic terms, the choice of words to describe a person with a disability is overlaid with stereotypes, patronizing attitudes, and other emotional connotations. Many individuals with disabilities, and organizations representing such individuals, object to the use of such terms as ''handicapped person'' or ''the handicapped.'' In other recent legislation, Congress also recognized this shift in terminology, e.g., by changing the name of the National Council on the Handicapped to the National Council on Disability (Pub. L. 100–630).

In enacting the Americans with Disabilities Act, Congress concluded that it was important for the current legislation to use terminology most in line with the sensibilities of most Americans with disabilities. No change in definition or substance is intended nor should be attributed to this change in phraseology.

The term ''disability'' means, with respect to an individual—

(A) A physical or mental impairment that substantially limits one or more of the major life activities of such individual;

(B) A record of such an impairment; or

(C) Being regarded as having such an impairment.

If an individual meets any one of these three tests, he or she is considered to be an individual with a disability for purposes of coverage under the Americans with Disabilities Act.

Congress adopted this same basic definition of ''disability,'' first used in the Rehabilitation Act of 1973 and in the Fair Housing Amendments Act of 1988, for a number of reasons. It has worked well since it was adopted in 1974. There is a substantial body of administrative interpretation and judicial precedent on this definition. Finally, it would not be possible to guarantee comprehensiveness by providing a list of specific

disabilities, especially because new disorders may be recognized in the future, as they have since the definition was first established in 1974.

Test A—A Physical or Mental Impairment That Substantially Limits One or More of the Major Life Activities of Such Individual

Physical or mental impairment. Under the first test, an individual must have a physical or mental impairment. As explained in paragraph (1) (i) of the definition, ''impairment'' means any physiological disorder or condition, cosmetic disfigurement, or anatomical loss affecting one or more of the following body systems: Neurological; musculoskeletal; special sense organs (including speech organs that are not respiratory, such as vocal cords, soft palate, and tongue); respiratory, including speech organs; cardiovascular; reproductive; digestive; genitourinary; hemic and lymphatic; skin; and endocrine. It also means any mental or psychological disorder, such as mental retardation, organic brain syndrome, emotional or mental illness, and specific learning disabilities. This list closely tracks the one used in the regulations for section 504 of the Rehabilitation Act of 1973 (see, *e.g.*, 45 CFR 84.3(j)(2)(i)).

Many commenters asked that ''traumatic brain injury'' be added to the list in paragraph (1)(i). Traumatic brain injury is already included because it is a physiological condition affecting one of the listed body systems, i.e., ''neurological.'' Therefore, it was unnecessary for the Department to add the term to the regulation.

It is not possible to include a list of all the specific conditions, contagious and noncontagious diseases, or infections that would constitute physical or mental impairments because of the difficulty of ensuring the comprehensiveness of such a list, particularly in light of the fact that other conditions or disorders may be identified in the future. However, the list of examples in paragraph (1)(iii) of the definition includes: Orthopedic, visual, speech and hearing impairments; cerebral palsy; epilepsy, muscular dystrophy, multiple sclerosis, cancer, heart disease, diabetes, mental retardation, emotional illness, specific learning disabilities, HIV disease (symptomatic or asymptomatic), tuberculosis, drug addiction, and alcoholism.

The examples of ''physical or mental impairments'' in paragraph (1)(iii) are the same as those contained in many section 504 regulations, except for the addition of the phrase ''contagious and noncontagious'' to describe the types of diseases and conditions included, and the addition of ''HIV disease (symptomatic or asymptomatic)'' and ''tuberculosis'' to the list of examples. These additions are based on the ADA committee reports, caselaw, and official legal opinions interpreting section 504. In *School Board of Nassau County* v. *Arline,* 480 U.S. 273 (1987), a case involving an individual with tuberculosis, the Supreme Court held that people with contagious diseases are entitled to the protections afforded by section 504. Following the *Arline* decision, this Department's Office of Legal Counsel issued a legal opinion that concluded that symptomatic HIV disease is an impairment that substantially limits a major life activity; therefore it has been included in the definition of disability under this part. The opinion also concluded that asymptomatic HIV disease is an impairment that substantially limits a major life activity, either because of its actual effect on the individual with HIV disease or because the reactions of other people to individuals with HIV disease cause such individuals to be treated as though they are disabled. See Memorandum from Douglas W. Kmiec, Acting Assistant Attorney General, Office of Legal Counsel, Department of Justice, to Arthur B. Culvahouse, Jr., Counsel to the President (Sept. 27, 1988), *reprinted in* Hearings on S. 933, the Americans with Disabilities Act, Before the Subcomm. on the Handicapped of the Senate Comm. on Labor and Human Resources, 101st Cong., 1st Sess. 346 (1989). The phrase ''symptomatic or asymptomatic'' was inserted in the final rule after ''HIV disease'' in response to commenters who suggested that the clarification was necessary to give full meaning to the Department's opinion.

Paragraph (1)(iv) of the definition states that the phrase ''physical or mental impairment'' does not include homosexuality or bisexuality. These conditions were never considered impairments under other Federal disability laws. Section 511(a) of the statute makes clear that they are likewise not to be considered impairments under the Americans with Disabilities Act.

Physical or mental impairment does not include simple physical characteristics, such as blue eyes or black hair. Nor does it include environmental, cultural, economic, or other disadvantages, such as having a prison record, or being poor. Nor is age a disability. Similarly, the definition does not include common personality traits such as poor judgment or a quick temper where these are not symptoms of a mental or psychological disorder. However, a person who has these characteristics and also has a physical or mental impairment may be considered as having a disability for purposes of the Americans with Disabilities Act based on the impairment.

Substantial limitation of a major life activity. Under Test A, the impairment must be one that ''substantially limits a major life activity.'' Major life activities include such things as caring for one's self, performing manual tasks, walking, seeing, hearing, speaking, breathing, learning, and working.

For example, a person who is paraplegic is substantially limited in the major life activity of walking, a person who is blind is substantially limited in the major life activity of seeing, and a person who is mentally retarded is substantially limited in the major life activity of learning. A person with traumatic brain injury is substantially limited in the major life activities of caring for one's self, learning, and working because of memory deficit, confusion, contextual difficulties, and inability to reason appropriately.

A person is considered an individual with a disability for purposes of Test A, the first prong of the definition, when the individual's important life activities are restricted as to the conditions, manner, or duration under which they can be performed in comparison to most people. A person with a minor, trivial impairment, such as a simple infected finger, is not impaired in a major life activity. A person who can walk for 10 miles continuously is not substantially limited in walking merely because, on the eleventh mile, he or she begins to experience pain, because most people would not be able to walk eleven miles without experiencing some discomfort.

The Department received many comments on the proposed rule's inclusion of the word ''temporary'' in the definition of ''disability.'' The preamble indicated that impairments are not necessarily excluded from the definition of ''disability'' simply because they are temporary, but that the duration, or expected duration, of an impairment is one factor that may properly be considered in determining whether the impairment substantially limits a major life activity. The preamble recognized, however, that temporary impairments, such as a broken leg, are not commonly regarded as disabilities, and only in rare circumstances would the degree of the limitation and its expected duration be substantial: Nevertheless, many commenters objected to inclusion of the word ''temporary'' both because it is not in the statute and because it is not contained in the definition of ''disability'' set forth in the title I regulations of the Equal Employment Opportunity Commission (EEOC). The word ''temporary'' has been deleted from the final rule to conform with the statutory language. The question of whether a temporary impairment is a disability must be resolved on a case-by-case basis, taking into consideration both the duration (or expected duration) of the impairment and the extent to which it actually limits a major life activity of the affected individual.

The question of whether a person has a disability should be assessed without regard to the availability of mitigating measures, such as reasonable modifications or auxiliary aids and services. For example, a person with hearing loss is substantially limited in the major life activity of hearing, even though the loss may be improved through the use of a hearing aid. Likewise, persons with impairments, such as epilepsy or diabetes, that substantially limit a major life activity, are covered under the first prong of the definition of disability, even if the effects of the impairment are controlled by medication.

Many commenters asked that environmental illness (also known as multiple chemical sensitivity) as well as allergy to cigarette smoke be recognized as disabilities. The Department, however, declines to state categorically that these types of allergies or sensitivities are disabilities, because the determination as to whether an impairment is a disability depends on whether, given the particular circumstances at issue, the impairment substantially limits one or more major life activities (or has a history of, or is regarded as having such an effect).

Sometimes respiratory or neurological functioning is so severely affected that an individual will satisfy the requirements to be considered disabled under the regulation. Such an individual would be entitled to all of the protections afforded by the Act and this part. In other cases, individuals may be sensitive to environmental elements or to smoke but their sensitivity will not rise to the level needed to constitute a disability. For example, their major life activity of breathing may be somewhat, but not substantially, impaired. In such circumstances, the individuals are not disabled and are not entitled to the protections of the statute despite their sensitivity to environmental agents.

In sum, the determination as to whether allergies to cigarette smoke, or allergies or sensitivities characterized by the commenters as environmental illness are disabilities covered by the regulation must be made using the same case-by-case analysis that is applied to all other physical or mental impairments. Moreover, the addition of specific regulatory provisions relating to environmental illness in the final rule would be inappropriate at this time pending future consideration of the issue by the Architectural and Transportation Barriers Compliance Board, the Environmental Protection Agency, and the Occupational Safety and Health Administration of the Department of Labor.

Test B—A Record of Such an Impairment

This test is intended to cover those who have a record of an impairment. As explained in paragraph (3) of the rule's definition of disability, this includes a person who has a history of an impairment that substantially limited a major life activity, such as someone who has recovered from an impairment. It also includes persons who have been misclassified as having an impairment.

This provision is included in the definition in part to protect individuals who have recovered from a physical or mental impairment that previously substantially limited them in a major life activity. Discrimination on the basis of such a past impairment is prohibited. Frequently occurring examples of the first group (those who have a history of an impairment) are persons with histories of mental or emotional illness, heart disease, or cancer; examples of the second group (those who have been misclassified as having an impairment) are persons who have been misclassified as having mental retardation or mental illness.

Test C—Being Regarded as Having Such an Impairment

This test, as contained in paragraph (4) of the definition, is intended to cover persons who are treated by a private entity or public accommodation as having a physical or mental impairment that substantially limits a major life activity. It applies when a person is treated as if he or she has an impairment that substantially limits a major life activity, regardless of whether that person has an impairment.

The Americans with Disabilities Act uses the same ''regarded as'' test set forth in the regulations implementing section 504 of the Rehabilitation Act. *See, e.g.,* 28 CFR 42.540(k)(2)(iv), which provides:

(iv) ''Is regarded as having an impairment'' means (A) Has a physical or mental impairment that does not substantially limit major life activities but that is treated by a recipient as constituting such a limitation; (B) Has a physical or mental impairment that substantially limits major life activities only as a result of the attitudes of others toward such impairment; or (C) Has none of the impairments defined in paragraph (k)(2)(i) of this section but is treated by a recipient as having such an impairment.

The perception of the private entity or public accommodation is a key element of this test. A person who perceives himself or herself to have an impairment, but does not have an impairment, and is not treated as if he or she has an impairment, is not protected under this test. A person would be covered under this test if a restaurant refused to serve that person because of a fear of ''negative reactions'' of others to that person. A person would also be covered if a public accommodation refused to serve a patron because it perceived that the patron had an impairment that limited his or her enjoyment of the goods or services being offered.

For example, persons with severe burns often encounter discrimination in community activities, resulting in substantial limitation of major life activities. These persons would be covered under this test based on the attitudes of others towards the impairment, even if they did not view themselves as ''impaired.''

The rationale for this third test, as used in the Rehabilitation Act of 1973, was articulated by the Supreme Court in *Arline,* 480 U.S. 273 (1987). The Court noted that, although an individual may have an impairment that does not in fact substantially limit a major life activity, the reaction of others may prove just as disabling. ''Such an impairment might not diminish a person's physical or mental capabilities, but could nevertheless substantially limit that person's ability to work as a result of the negative reactions of others to the impairment.'' *Id.* at 283. The Court concluded that, by including this test in the Rehabilitation Act's definition, ''Congress acknowledged that society's accumulated myths and fears about disability and disease are as handicapping as are the physical limitations that flow from actual impairment.'' *Id.* at 284.

Thus, a person who is not allowed into a public accommodation because of the myths, fears, and stereotypes associated with disabilities would be covered under this third test whether or not the person's physical or mental condition would be considered a disability under the first or second test in the definition.

If a person is refused admittance on the basis of an actual or perceived physical or mental condition, and the public accommodation can articulate no legitimate reason for the refusal (such as failure to meet eligibility criteria), a perceived concern about admitting persons with disabilities could be inferred and the individual would qualify for coverage under the ''regarded as'' test. A person who is covered because of being regarded as having an impairment is not required to show that the public accommodation's perception is inaccurate (e.g., that he will be accepted by others, or that insurance rates will not increase) in order to be admitted to the public accommodation.

Paragraph (5) of the definition lists certain conditions that are not included within the definition of ''disability.'' The excluded conditions are: transvestism, transsexualism, pedophilia, exhibitionism, voyeurism, gender identity disorders not resulting from physical impairments, other sexual behavior disorders, compulsive gambling, kleptomania, pyromania, and psychoactive substance use disorders resulting from current illegal use of drugs. Unlike homosexuality and bisexuality, which are not considered impairments under either the Americans with Disabilities Act (see the definition of ''disability,'' paragraph (1)(iv)) or section 504, the conditions listed in paragraph (5), except for transvestism, are not necessarily excluded as impairments under section 504. (Transvestism was excluded from the definition of disability for section 504 by the Fair Housing Amendments Act of 1988, Pub. L. 100–430,

§6(b).) The phrase ''current illegal use of drugs'' used in this definition is explained in the preamble to §36.209.

''Drug.'' The definition of the term ''drug'' is taken from section 510(d)(2) of the ADA.

''Facility.'' ''Facility'' means all or any portion of buildings, structures, sites, complexes, equipment, rolling stock or other conveyances, roads, walks, passageways, parking lots, or other real or personal property, including the site where the building, property, structure, or equipment is located. Committee reports made clear that the definition of facility was drawn from the definition of facility in current Federal regulations (*see, e.g.,* Education and Labor report at 114). It includes both indoor and outdoor areas where human-constructed improvements, structures, equipment, or property have been added to the natural environment.

The term ''rolling stock or other conveyances'' was not included in the definition of facility in the proposed rule. However, commenters raised questions about the applicability of this part to places of public accommodation operated in mobile facilities (such as cruise ships, floating restaurants, or mobile health units). Those places of public accommodation are covered under this part, and would be included in the definition of ''facility.'' Thus the requirements of subparts B and C would apply to those places of public accommodation. For example, a covered entity could not discriminate on the basis of disability in the full and equal enjoyment of the facilities (§36.201). Similarly, a cruise line could not apply eligibility criteria to potential passengers in a manner that would screen out individuals with disabilities, unless the criteria are ''necessary,'' as provided in §36.301.

However, standards for new construction and alterations of such facilities are not yet included in the Americans with Disabilities Act Accessibility Guidelines for Buildings and Facilities (ADAAG) adopted by §36.406 and incorporated in appendix A. The Department therefore will not interpret the new construction and alterations provisions of subpart D to apply to the types of facilities discussed here, pending further development of specific requirements.

Requirements pertaining to accessible transportation services provided by public accommodations are included in §36.310 of this part; standards pertaining to accessible vehicles will be issued by the Secretary of Transportation pursuant to section 306 of the Act, and will be codified at 49 CFR part 37.

A public accommodation has obligations under this rule with respect to a cruise ship to the extent that its operations are subject to the laws of the United States.

The definition of ''facility'' only includes the site over which the private entity may exercise control or on which a place of public accommodation or a commercial facility is located. It does not include, for example, adjacent roads or walks controlled by a public entity that is not subject to this part. Public entities are subject to the requirements of title II of the Act. The Department's regulation implementing title II, which will be codified at 28 CFR part 35, addresses the obligations of public entities to ensure accessibility by providing curb ramps at pedestrian walkways.

''Illegal use of drugs.'' The definition of ''illegal use of drugs'' is taken from section 510(d)(1) of the Act and clarifies that the term includes the illegal use of one or more drugs.

''Individual with a disability'' means a person who has a disability but does not include an individual who is currently illegally using drugs, when the public accommodation acts on the basis of such use. The phrase ''current illegal use of drugs'' is explained in the preamble to §36.209.

''Place of public accommodation.'' The term ''place of public accommodation'' is an adaptation of the statutory definition of ''public accommodation'' in section 301(7) of the ADA and appears as an element of the regulatory definition of public accommodation. The final rule defines ''place of public accommodation'' as a facility, operated by a private entity, whose operations affect commerce and fall within at least one of 12 specified categories. The term ''public accommodation,'' on the other hand, is reserved by the final rule for the private entity that owns, leases (or leases to), or operates a place of public accommodation. It is the public accommodation, and not the place of public accommodation, that is subject to the regulation's nondiscrimination requirements. Placing the obligation not to discriminate on the public accommodation, as defined in the rule, is consistent with section 302(a) of the ADA, which places the obligation not to discriminate on any person who owns, leases (or leases to), or operates a place of public accommodation.

Facilities operated by government agencies or other public entities as defined in this section do not qualify as places of public accommodation. The actions of public entities are governed by title II of the ADA and will be subject to regulations issued by the Department of Justice under that title. The receipt of government assistance by a private entity does not by itself preclude a facility from being considered as a place of public accommodation.

The definition of place of public accommodation incorporates the 12 categories of facilities represented in the statutory definition of public accommodation in section 301(7) of the ADA:

1. Places of lodging.
2. Establishments serving food or drink.
3. Places of exhibition or entertainment.
4. Places of public gathering.

5. Sales or rental establishments.
6. Service establishments.
7. Stations used for specified public transportation.
8. Places of public display or collection.
9. Places of recreation.
10. Places of education.
11. Social service center establishments.
12. Places of exercise or recreation.

In order to be a place of public accommodation, a facility must be operated by a private entity, its operations must affect commerce, and it must fall within one of these 12 categories. While the list of categories is exhaustive, the representative examples of facilities within each category are not. Within each category only a few examples are given. The category of social service center establishments would include not only the types of establishments listed, day care centers, senior citizen centers, homeless shelters, food banks, adoption agencies, but also establishments such as substance abuse treatment centers, rape crisis centers, and halfway houses. As another example, the category of sales or rental establishments would include an innumerable array of facilities that would sweep far beyond the few examples given in the regulation. For example, other retail or wholesale establishments selling or renting items, such as bookstores, videotape rental stores, car rental establishment, pet stores, and jewelry stores would also be covered under this category, even though they are not specifically listed.

Several commenters requested clarification as to the coverage of wholesale establishments under the category of ''sales or rental establishments.'' The Department intends for wholesale establishments to be covered under this category as places of public accommodation except in cases where they sell exclusively to other businesses and not to individuals. For example, a company that grows food produce and supplies its crops exclusively to food processing corporations on a wholesale basis does not become a public accommodation because of these transactions. If this company operates a road side stand where its crops are sold to the public, the road side stand would be a sales establishment covered by the ADA. Conversely, a sales establishment that markets its goods as ''wholesale to the public'' and sells to individuals would not be exempt from ADA coverage despite its use of the word ''wholesale'' as a marketing technique.

Of course, a company that operates a place of public accommodation is subject to this part only in the operation of that place of public accommodation. In the example given above, the wholesale produce company that operates a road side stand would be a public accommodation only for the purposes of the operation of that stand. The company would be prohibited from discriminating on the basis of disability in the operation of the road side stand, and it would be required to remove barriers to physical access to the extent that it is readily achievable to do so (see §36.304); however, in the event that it is not readily achievable to remove barriers, for example, by replacing a gravel surface or regrading the area around the stand to permit access by persons with mobility impairments, the company could meet its obligations through alternative methods of making its goods available, such as delivering produce to a customer in his or her car (see §36.305). The concepts of readily achievable barrier removal and alternatives to barrier removal are discussed further in the preamble discussion of §§36.304 and 36.305.

Even if a facility does not fall within one of the 12 categories, and therefore does not qualify as a place of public accommodation, it still may be a commercial facility as defined in §36.104 and be subject to the new construction and alterations requirements of subpart D.

A number of commenters questioned the treatment of residential hotels and other residential facilities in the Department's proposed rule. These commenters were essentially seeking resolution of the relationship between the Fair Housing Act and the ADA concerning facilities that are both residential in nature and engage in activities that would cause them to be classified as ''places of public accommodation'' under the ADA. The ADA's express exemption relating to the Fair Housing Act applies only to ''commercial facilities'' and not to ''places of public accommodation.''

A facility whose operations affect interstate commerce is a place of public accommodation for purposes of the ADA to the extent that its operations include those types of activities engaged in or services provided by the facilities contained on the list of 12 categories in section 301(7) of the ADA. Thus, a facility that provides social services would be considered a ''social service center establishment.'' Similarly, the category ''places of lodging'' would exclude solely residential facilities because the nature of a place of lodging contemplates the use of the facility for short-term stays.

Many facilities, however, are mixed use facilities. For example, in a large hotel that has a separate residential apartment wing, the residential wing would not be covered by the ADA because of the nature of the occupancy of that part of the facility. This residential wing would, however, be covered by the Fair Housing Act. The separate nonresidential accommodations in the rest of the hotel would be a place of lodging, and thus a public accommodation subject to the requirements of this final rule. If a hotel allows both residential and short-term stays, but does not allocate space for these different uses in separate, discrete units, both the ADA and the Fair Housing Act may

apply to the facility. Such determinations will need to be made on a case-by-case basis. Any place of lodging of the type described in paragraph (1) of the definition of place of public accommodation and that is an establishment located within a building that contains not more than five rooms for rent or hire and is actually occupied by the proprietor of the establishment as his or her residence is not covered by the ADA. (This exclusion from coverage does not apply to other categories of public accommodations, for example, professional offices or homeless shelters, that are located in a building that is also occupied as a private residence.)

A number of commenters noted that the term ''residential hotel'' may also apply to a type of hotel commonly known as a ''single room occupancy hotel.'' Although such hotels or portions of such hotels may fall under the Fair Housing Act when operated or used as long-term residences, they are also considered ''places of lodging'' under the ADA when guests of such hotels are free to use them on a short-term basis. In addition, ''single room occupancy hotels'' may provide social services to their guests, often through the operation of Federal or State grant programs. In such a situation, the facility would be considered a ''social service center establishment'' and thus covered by the ADA as a place of public accommodation, regardless of the length of stay of the occupants.

A similar analysis would also be applied to other residential facilities that provide social services, including homeless shelters, shelters for people seeking refuge from domestic violence, nursing homes, residential care facilities, and other facilities where persons may reside for varying lengths of time. Such facilities should be analyzed under the Fair Housing Act to determine the application of that statute. The ADA, however, requires a separate and independent analysis. For example, if the facility, or a portion of the facility, is intended for or permits short-term stays, or if it can appropriately be categorized as a service establishment or as a social service establishment, then the facility or that portion of the facility used for the covered purpose is a place of public accommodation under the ADA. For example, a homeless shelter that is intended and used only for long-term residential stays and that does not provide social services to its residents would not be covered as a place of public accommodation. However, if this facility permitted short-term stays or provided social services to its residents, it would be covered under the ADA either as a ''place of lodging'' or as a ''social service center establishment,'' or as both.

A private home, by itself, does not fall within any of the 12 categories. However, it can be covered as a place of public accommodation to the extent that it is used as a facility that would fall within one of the 12 categories. For example, if a professional office of a dentist, doctor, or psychologist is located in a private home, the portion of the home dedicated to office use (including areas used both for the residence and the office, e.g., the entrance to the home that is also used as the entrance to the professional office) would be considered a place of public accommodation. Places of public accommodation located in residential facilities are specifically addressed in §36.207.

If a tour of a commercial facility that is not otherwise a place of public accommodation, such as, for example, a factory or a movie studio production set, is open to the general public, the route followed by the tour is a place of public accommodation and the tour must be operated in accordance with the rule's requirements for public accommodations. The place of public accommodation defined by the tour does not include those portions of the commercial facility that are merely viewed from the tour route. Hence, the barrier removal requirements of §36.304 only apply to the physical route followed by the tour participants and not to work stations or other areas that are merely adjacent to, or within view of, the tour route. If the tour is not open to the general public, but rather is conducted, for example, for selected business colleagues, partners, customers, or consultants, the tour route is not a place of public accommodation and the tour is not subject to the requirements for public accommodations.

Public accommodations that receive Federal financial assistance are subject to the requirements of section 504 of the Rehabilitation Act as well as the requirements of the ADA.

Private schools, including elementary and secondary schools, are covered by the rule as places of public accommodation. The rule itself, however, does not require a private school to provide a free appropriate education or develop an individualized education program in accordance with regulations of the Department of Education implementing section 504 of the Rehabilitation Act of 1973, as amended (34 CFR part 104), and regulations implementing the Individuals with Disabilities Education Act (34 CFR part 300). The receipt of Federal assistance by a private school, however, would trigger application of the Department of Education's regulations to the extent mandated by the particular type of assistance received.

''Private club.'' The term ''private club'' is defined in accordance with section 307 of the ADA as a private club or establishment exempted from coverage under title II of the Civil Rights Act of 1964. Title II of the 1964 Act exempts any ''private club or other establishment not in fact open to the public, except to the extent that the facilities of such establishment are made available to the customers or patrons of [a place of public

accommodation as defined in title II].'' The rule, therefore, as reflected in §36.102(e) of the application section, limits the coverage of private clubs accordingly. The obligations of a private club that rents space to any other private entity for the operation of a place of public accommodation are discussed further in connection with §36.201.

In determining whether a private entity qualifies as a private club under title II, courts have considered such factors as the degree of member control of club operations, the selectivity of the membership selection process, whether substantial membership fees are charged, whether the entity is operated on a nonprofit basis, the extent to which the facilities are open to the public, the degree of public funding, and whether the club was created specifically to avoid compliance with the Civil Rights Act. See *e.g., Tillman* v. *Wheaton-Haven Recreation Ass'n,* 410 U.S. 431 (1973); *Daniel* v. *Paul,* 395 U.S. 298 (1969); *Olzman* v. *Lake Hills Swim Club, Inc.,* 495 F.2d 1333 (2d Cir. 1974); *Anderson* v. *Pass Christian Isles Golf Club, Inc.,* 488 F.2d 855 (5th Cir. 1974); *Smith* v. *YMCA,* 462 F.2d 634 (5th Cir. 1972); *Stout* v. *YMCA,* 404 F.2d 687 (5th Cir. 1968); *United States* v. *Richberg,* 398 F.2d 523 (5th Cir. 1968); *Nesmith* v. *YMCA,* 397 F.2d 96 (4th Cir. 1968); *United States* v. *Lansdowne Swim Club,* 713 F. Supp. 785 (E.D. Pa. 1989); *Durham* v. *Red Lake Fishing and Hunting Club, Inc.,* 666 F. Supp. 954 (W.D. Tex. 1987); *New York* v. *Ocean Club, Inc.,* 602 F. Supp. 489 (E.D.N.Y. 1984); *Brown* v. *Loudoun Golf and Country Club, Inc.,* 573 F. Supp. 399 (E.D. Va. 1983); *United States* v. *Trustees of Fraternal Order of Eagles,* 472 F. Supp. 1174 (E.D. Wis. 1979); *Cornelius* v. *Benevolent Protective Order of Elks,* 382 F. Supp. 1182 (D. Conn. 1974).

''Private entity.'' The term ''private entity'' is defined as any individual or entity other than a public entity. It is used as part of the definition of ''public accommodation'' in this section.

The definition adds ''individual'' to the statutory definition of private entity (see section 301(6) of the ADA). This addition clarifies that an individual may be a private entity and, therefore, may be considered a public accommodation if he or she owns, leases (or leases to), or operates a place of public accommodation. The explicit inclusion of individuals under the definition of private entity is consistent with section 302(a) of the ADA, which broadly prohibits discrimination on the basis of disability by any person who owns, leases (or leases to), or operates a place of public accommodation.

''Public accommodation.'' The term ''public accommodation'' means a private entity that owns, leases (or leases to), or operates a place of public accommodation. The regulatory term, ''public accommodation,'' corresponds to the statutory term, ''person,'' in section 302(a) of the ADA. The ADA prohibits discrimination ''by any person who owns, leases (or leases to), or operates a place of public accommodation.'' The text of the regulation consequently places the ADA's nondiscrimination obligations on ''public accommodations'' rather than on ''persons'' or on ''places of public accommodation.''

As stated in §36.102(b)(2), the requirements of subparts B and C obligate a public accommodation only with respect to the operations of a place of public accommodation. A public accommodation must also meet the requirements of subpart D with respect to facilities used as, or designed or constructed for use as, places of public accommodation or commercial facilities.

''Public entity.'' The term ''public entity'' is defined in accordance with section 201(1) of the ADA as any State or local government; any department, agency, special purpose district, or other instrumentality of a State or States or local government; and the National Railroad Passenger Corporation, and any commuter authority (as defined in section 103(8) of the Rail Passenger Service Act). It is used in the definition of ''private entity'' in §36.104. Public entities are excluded from the definition of private entity and therefore cannot qualify as public accommodations under this regulation. However, the actions of public entities are covered by title II of the ADA and by the Department's title II regulations codified at 28 CFR part 35.

''Qualified interpreter.'' The Department received substantial comment regarding the lack of a definition of ''qualified interpreter.'' The proposed rule defined auxiliary aids and services to include the statutory term, ''qualified interpreters'' (§36.303(b)), but did not define that term. Section 36.303 requires the use of a qualified interpreter where necessary to achieve effective communication, unless an undue burden or fundamental alteration would result. Commenters stated that a lack of guidance on what the term means would create confusion among those trying to secure interpreting services and often result in less than effective communication.

Many commenters were concerned that, without clear guidance on the issue of ''qualified'' interpreter, the rule would be interpreted to mean ''available, rather than qualified'' interpreters. Some claimed that few public accommodations would understand the difference between a qualified interpreter and a person who simply knows a few signs or how to fingerspell.

In order to clarify what is meant by ''qualified interpreter'' the Department has added a definition of the term to the final rule. A qualified interpreter means an interpreter who is able to interpret effectively, accurately, and impartially both receptively and expressively, using any necessary specialized vocabulary. This definition focuses on the actual ability of the interpreter in a particular interpreting context to facilitate

effective communication between the public accommodation and the individual with disabilities.

Public comment also revealed that public accommodations have at times asked persons who are deaf to provide family members or friends to interpret. In certain circumstances, notwithstanding that the family member or friend is able to interpret or is a certified interpreter, the family member or friend may not be qualified to render the necessary interpretation because of factors such as emotional or personal involvement or considerations of confidentiality that may adversely affect the ability to interpret ''effectively, accurately, and impartially.''

''Readily achievable.'' The definition of ''readily achievable'' follows the statutory definition of that term in section 301(9) of the ADA. Readily achievable means easily accomplishable and able to be carried out without much difficulty or expense. The term is used as a limitation on the obligation to remove barriers under §§36.304(a), 36.305(a), 36.308(a), and 36.310(b). Further discussion of the meaning and application of the term ''readily achievable'' may be found in the preamble section for §36.304.

The definition lists factors to be considered in determining whether barrier removal is readily achievable in any particular circumstance. A significant number of commenters objected to §36.306 of the proposed rule, which listed identical factors to be considered for determining ''readily achievable'' and ''undue burden'' together in one section. They asserted that providing a consolidated section blurred the distinction between the level of effort required by a public accommodation under the two standards. The readily achievable standard is a ''lower'' standard than the ''undue burden'' standard in terms of the level of effort required, but the factors used in determining whether an action is readily achievable or would result in an undue burden are identical (See Education and Labor report at 109). Although the preamble to the proposed rule clearly delineated the relationship between the two standards, to eliminate any confusion the Department has deleted §36.306 of the proposed rule. That section, in any event, as other commenters noted, had merely repeated the lists of factors contained in the definitions of readily achievable and undue burden.

The list of factors included in the definition is derived from section 301(9) of the ADA. It reflects the congressional intention that a wide range of factors be considered in determining whether an action is readily achievable. It also takes into account that many local facilities are owned or operated by parent corporations or entities that conduct operations at many different sites. This section makes clear that, in some instances, resources beyond those of the local facility where the barrier must be removed may be relevant in determining whether an action is readily achievable. One must also evaluate the degree to which any parent entity has resources that may be allocated to the local facility.

The statutory list of factors in section 301(9) of the Act uses the term ''covered entity'' to refer to the larger entity of which a particular facility may be a part. ''Covered entity'' is not a defined term in the ADA and is not used consistently throughout the Act. The definition, therefore, substitutes the term ''parent entity'' in place of ''covered entity'' in paragraphs (3), (4), and (5) when referring to the larger private entity whose overall resources may be taken into account. This usage is consistent with the House Judiciary Committee's use of the term ''parent company'' to describe the larger entity of which the local facility is a part (H.R. Rep. No. 485, 101st Cong., 2d Sess., pt. 3, at 40–41, 54–55 (1990) (hereinafter ''Judiciary report'')).

A number of commenters asked for more specific guidance as to when and how the resources of a parent corporation or entity are to be taken into account in determining what is readily achievable. The Department believes that this complex issue is most appropriately resolved on a case-by-case basis. As the comments reflect, there is a wide variety of possible relationships between the site in question and any parent corporation or other entity. It would be unwise to posit legal ramifications under the ADA of even generic relationships (e.g., banks involved in foreclosures or insurance companies operating as trustees or in other similar fiduciary relationships), because any analysis will depend so completely on the detailed fact situations and the exact nature of the legal relationships involved. The final rule does, however, reorder the factors to be considered. This shift and the addition of the phrase ''if applicable'' make clear that the line of inquiry concerning factors will start at the site involved in the action itself. This change emphasizes that the overall resources, size, and operations of the parent corporation or entity should be considered to the extent appropriate in light of ''the geographic separateness, and the administrative or fiscal relationship of the site or sites in question to any parent corporation or entity.''

Although some commenters sought more specific numerical guidance on the definition of readily achievable, the Department has declined to establish in the final rule any kind of numerical formula for determining whether an action is readily achievable. It would be difficult to devise a specific ceiling on compliance costs that would take into account the vast diversity of enterprises covered by the ADA's public accommodations requirements and the economic situation that any particular entity would find itself in at any moment. The final rule, therefore,

implements the flexible case-by-case approach chosen by Congress.

A number of commenters requested that security considerations be explicitly recognized as a factor in determining whether a barrier removal action is readily achievable. The Department believes that legitimate safety requirements, including crime prevention measures, may be taken into account so long as they are based on actual risks and are necessary for safe operation of the public accommodation. This point has been included in the definition.

Some commenters urged the Department not to consider acts of barrier removal in complete isolation from each other in determining whether they are readily achievable. The Department believes that it is appropriate to consider the cost of other barrier removal actions as one factor in determining whether a measure is readily achievable.

''Religious entity.'' The term ''religious entity'' is defined in accordance with section 307 of the ADA as a religious organization or entity controlled by a religious organization, including a place of worship. Section 36.102(e) of the rule states that the rule does not apply to any religious entity.

The ADA's exemption of religious organizations and religious entities controlled by religious organizations is very broad, encompassing a wide variety of situations. Religious organizations and entities controlled by religious organizations have no obligations under the ADA. Even when a religious organization carries out activities that would othervise make it a public accommodation, the religious organization is exempt from ADA coverage. Thus, if a church itself operates a day care center, a nursing home, a private school, or a diocesan school system, the operations of the center, home, school, or schools would not be subject to the requirements of the ADA or this part. The religious entity would not lose its exemption merely because the services provided were open to the general public. The test is whether the church or other religious organization operates the public accommodation, not which individuals receive the public accommodation's services.

Religious entities that are controlled by religious organizations are also exempt from the ADA's requirements. Many religious organizations in the United States use lay boards and other secular or corporate mechanisms to operate schools and an array of social services. The use of a lay board or other mechanism does not itself remove the ADA's religious exemption. Thus, a parochial school, having religious doctrine in its curriculum and sponsored by a religious order, could be exempt either as a religious organization or as an entity controlled by a religious organization, even if it has a lay board. The test remains a factual one—whether the church or other religious organization controls the operations of the school or of the service or whether the school or service is itself a religious organization.

Although a religious organization or a religious entity that is controlled by a religious organization has no obligations under the rule, a public accommodation that is not itself a religious organization, but that operates a place of public accommodation in leased space on the property of a religious entity, which is not a place of worship, is subject to the rule's requirements if it is not under control of a religious organization. When a church rents meeting space, which is not a place of worship, to a local community group or to a private, independent day care center, the ADA applies to the activities of the local community group and day care center if a lease exists and consideration is paid.

''Service animal.'' The term ''service animal'' encompasses any guide dog, signal dog, or other animal individually trained to provide assistance to an individual with a disability. The term is used in §36.302(c), which requires public accommodations generally to modify policies, practices, and procedures to accommodate the use of service animals in places of public accommodation.

''Specified public transportation.'' The definition of ''specified public transportation'' is identical to the statutory definition in section 301(10) of the ADA. The term means transportation by bus, rail, or any other conveyance (other than by aircraft) that provides the general public with general or special service (including charter service) on a regular and continuing basis. It is used in category (7) of the definition of ''place of public accommodation,'' which includes stations used for specified public transportation.

The effect of this definition, which excludes transportation by aircraft, is that it excludes privately operated airports from coverage as places of public accommodation. However, places of public accommodation located within airports would be covered by this part. Airports that are operated by public entities are covered by title II of the ADA and, if they are operated as part of a program receiving Federal financial assistance, by section 504 of the Rehabilitation Act. Privately operated airports are similarly covered by section 504 if they are operated as part of a program receiving Federal financial assistance. The operations of any portion of any airport that are under the control of an air carrier are covered by the Air Carrier Access Act. In addition, airports are covered as commercial facilities under this rule.

''State.'' The definition of ''State'' is identical to the statutory definition in section 3(3) of the ADA. The term is used in the definitions of ''commerce'' and ''public entity'' in §36.104.

''Undue burden.'' The definition of ''undue burden'' is analogous to the statutory definition of ''undue hardship'' in employment under section 101(10) of the ADA. The term undue burden means ''significant difficulty or expense'' and serves as a limitation on the obligation to provide auxiliary aids and services under §36.303 and §§36.309 (b)(3) and (c)(3). Further discussion of the meaning and application of the term undue burden may be found in the preamble discussion of §36.303.

The definition lists factors considered in determining whether provision of an auxiliary aid or service in any particular circumstance would result in an undue burden. The factors to be considered in determining whether an action would result in an undue burden are identical to those to be considered in determining whether an action is readily achievable. However, ''readily achievable'' is a lower standard than ''undue burden'' in that it requires a lower level of effort on the part of the public accommodation (see Education and Labor report at 109).

Further analysis of the factors to be considered in determining undue burden may be found in the preamble discussion of the definition of the term ''readily achievable.''

Subpart B—General Requirements

Subpart B includes general prohibitions restricting a public accommodation from discriminating against people with disabilities by denying them the opportunity to benefit from goods or services, by giving them unequal goods or services, or by giving them different or separate goods or services. These general prohibitions are patterned after the basic, general prohibitions that exist in other civil rights laws that prohibit discrimination on the basis of race, sex, color, religion, or national origin.

Section 36.201 General

Section 36.201(a) contains the general rule that prohibits discrimination on the basis of disability in the full and equal enjoyment of goods, services, facilities, privileges, advantages, and accommodations of any place of public accommodation.

Full and equal enjoyment means the right to participate and to have an equal opportunity to obtain the same results as others to the extent possible with such accommodations as may be required by the Act and these regulations. It does not mean that an individual with a disability must achieve an identical result or level of achievement as persons without a disability. For example, an exercise class cannot exclude a person who uses a wheelchair because he or she cannot do all of the exercises and derive the same result from the class as persons without a disability.

Section 302(a) of the ADA states that the prohibition against discrimination applies to ''any person who owns, leases (or leases to), or operates a place of public accommodation,'' and this language is reflected in §36.201(a). The coverage is quite extensive and would include sublessees, management companies, and any other entity that owns, leases, leases to, or operates a place of public accommodation, even if the operation is only for a short time.

The first sentence of paragraph (b) of §36.201 reiterates the general principle that both the landlord that owns the building that houses the place of public accommodation, as well as the tenant that owns or operates the place of public accommodation, are public accommodations subject to the requirements of this part. Although the statutory language could be interpreted as placing equal responsibility on all private entities, whether lessor, lessee, or operator of a public accommodation, the committee reports suggest that liability may be allocated. Section 36.201(b) of that section of the proposed rule attempted to allocate liability in the regulation itself. Paragraph (b)(2) of that section made a specific allocation of liability for the obligation to take readily achievable measures to remove barriers, and paragraph (b)(3) made a specific allocation for the obligation to provide auxiliary aids.

Numerous commenters pointed out that these allocations would not apply in all situations. Some asserted that paragraph (b)(2) of the proposed rule only addressed the situation when a lease gave the tenant the right to make alterations with permission of the landlord, but failed to address other types of leases, e.g., those that are silent on the right to make alterations, or those in which the landlord is not permitted to enter a tenant's premises to make alterations. Several commenters noted that many leases contain other clauses more relevant to the ADA than the alterations clause. For example, many leases contain a ''compliance clause,'' a clause which allocates responsibility to a particular party for compliance with all relevant Federal, State, and local laws. Many commenters pointed out various types of relationships that were left unaddressed by the regulation, e.g., sale and leaseback arrangements where the landlord is a financial institution with no control or responsibility for the building; franchises; subleases; and management companies which, at least in the hotel industry, often have control over operations but are unable to make modifications to the premises.

Some commenters raised specific questions as to how the barrier removal allocation would work as a practical matter. Paragraph (b)(2) of the proposed rule provided that the burden of making readily achievable modifications within the tenant's place of public accommodation would shift to the landlord when the modifications were not readily

achievable for the tenant or when the landlord denied a tenant's request for permission to make such modifications. Commenters noted that the rule did not specify exactly when the burden would actually shift from tenant to landlord and whether the landlord would have to accept a tenant's word that a particular action is not readily achievable. Others questioned if the tenant should be obligated to use alternative methods of barrier removal before the burden shifts. In light of the fact that readily achievable removal of barriers can include such actions as moving of racks and displays, some commenters doubted the appropriateness of requiring a landlord to become involved in day-to-day operations of its tenants' businesses.

The Department received widely differing comments in response to the preamble question asking whether landlord and tenant obligations should vary depending on the length of time remaining on an existing lease. Many suggested that tenants should have no responsibilities in ''shorter leases,'' which commenters defined as ranging anywhere from 90 days to three years. Other commenters pointed out that the time remaining on the lease should not be a factor in the rule's allocation of responsibilities, but is relevant in determining what is readily achievable for the tenant. The Department agrees with this latter approach and will interpret the rule in that manner.

In recognition of the somewhat limited applicability of the allocation scheme contained in the proposed rule, paragraphs (b)(2) and (b)(3) have been deleted from the final rule. The Department has substituted instead a statement that allocation of responsibility as between the parties for taking readily achievable measures to remove barriers and to provide auxiliary aids and services both in common areas and within places of public accommodation may be determined by the lease or other contractual relationships between the parties. The ADA was not intended to change existing landlord/tenant responsibilities as set forth in the lease. By deleting specific provisions from the rule, the Department gives full recognition to this principle. As between the landlord and tenant, the extent of responsibility for particular obligations may be, and in many cases probably will be, determined by contract.

The suggested allocation of responsibilities contained in the proposed rule may be used if appropriate in a particular situation. Thus, the landlord would generally be held responsible for making readily achievable changes and providing auxiliary aids and services in common areas and for modifying policies, practices, or procedures applicable to all tenants, and the tenant would generally be responsible for readily achievable changes, provision of auxiliary aids, and modification of policies within its own place of public accommodation.

Many commenters objected to the proposed rule's allocation of responsibility for providing auxiliary aids and services solely to the tenant, pointing out that this exclusive allocation may not be appropriate in the case of larger public accommodations that operate their businesses by renting space out to smaller public accommodations. For example, large theaters often rent to smaller traveling companies and hospitals often rely on independent contractors to provide childbirth classes. Groups representing persons with disabilities objected to the proposed rule because, in their view, it permitted the large theater or hospital to evade ADA responsibilities by leasing to independent smaller entities. They suggested that these types of public accommodations are not really landlords because they are in the business of providing a service, rather than renting space, as in the case of a shopping center or office building landlord. These commenters believed that responsibility for providing auxiliary aids should shift to the landlord, if the landlord relies on a smaller public accommodation or independent contractor to provide services closely related to those of the larger public accommodation, and if the needed auxiliary aids prove to be an undue burden for the smaller public accommodation. The final rule no longer lists specific allocations to specific parties but, rather, leaves allocation of responsibilities to the lease negotiations. Parties are, therefore, free to allocate the responsibility for auxiliary aids.

Section 36.201(b)(4) of the proposed rule, which provided that alterations by a tenant on its own premises do not trigger a path of travel obligation on the landlord, has been moved to § 36.403(d) of the final rule.

An entity that is not in and of itself a public accommodation, such as a trade association or performing artist, may become a public accommodation when it leases space for a conference or performance at a hotel, convention center, or stadium. For an entity to become a public accommodation when it is the lessee of space, however, the Department believes that consideration in some form must be given. Thus, a Boy Scout troop that accepts donated space does not become a public accommodation because the troop has not ''leased'' space, as required by the ADA.

As a public accommodation, the trade association or performing artist will be responsible for compliance with this part. Specific responsibilities should be allocated by contract, but, generally, the lessee should be responsible for providing auxiliary aids and services (which could include interpreters, Braille programs, etc.) for the participants in its conference or performance as well as for assuring that displays are accessible to individuals with disabilities.

Some commenters suggested that the rule should allocate responsibilities for areas other than removal of barriers and auxiliary aids. The final rule leaves allocation of all areas to the lease negotiations. However, in general landlords should not be given responsibility for policies a tenant applies in operating its business, if such policies are solely those of the tenant. Thus, if a restaurant tenant discriminates by refusing to seat a patron, it would be the tenant, and not the landlord, who would be responsible, because the discriminatory policy is imposed solely by the tenant and not by the landlord. If, however, a tenant refuses to modify a ''no pets'' rule to allow service animals in its restaurant because the landlord mandates such a rule, then both the landlord and the tenant would be liable for violation of the ADA when a person with a service dog is refused entrance. The Department wishes to emphasize, however, that the parties are free to allocate responsibilities in any way they choose.

Private clubs are also exempt from the ADA. However, consistent with title II of the Civil Rights Act (42 U.S.C. 2000a(e), a private club is considered a public accommodation to the extent that ''the facilities of such establishment are made available to the customers or patrons'' of a place of public accommodation. Thus, if a private club runs a day care center that is open exclusively to its own members, the club, like the church in the example above, would have no responsibility for compliance with the ADA. Nor would the day care center have any responsibilities because it is part of the private club exempt from the ADA.

On the other hand, if the private club rents to a day care center that is open to the public, then the private club would have the same obligations as any other public accommodation that functions as a landlord with respect to compliance with title III within the day care center. In such a situation, both the private club that ''leases to'' a public accommodation and the public accommodation lessee (the day care center) would be subject to the ADA. This same principle would apply if the private club were to rent to, for example, a bar association, which is not generally a public accommodation but which, as explained above, becomes a public accommodation when it leases space for a conference.

Section 36.202 Activities

Section 36.202 sets out the general forms of discrimination prohibited by title III of the ADA. These general prohibitions are further refined by the specific prohibitions in subpart C. Section 36.213 makes clear that the limitations on the ADA's requirements contained in subpart C, such as ''necessity'' (§36.301(a)) and ''safety'' (§36.301(b)), are applicable to the prohibitions in §36.202. Thus, it is unnecessary to add these limitations to §36.202 as has been requested by some commenters. In addition, the language of §36.202 very closely tracks the language of section 302(b)(1)(A) of the Act, and that statutory provision does not expressly contain these limitations.

Deny participation—Section 36.202(a) provides that it is discriminatory to deny a person with a disability the right to participate in or benefit from the goods, services, facilities, privileges, advantages, or accommodations of a place of public accommodation.

A public accommodation may not exclude persons with disabilities on the basis of disability for reasons other than those specifically set forth in this part. For example, a public accommodation cannot refuse to serve a person with a disability because its insurance company conditions coverage or rates on the absence of persons with disabilities. This is a frequent basis of exclusion from a variety of community activities and is prohibited by this part.

Unequal benefit—Section 36.202(b) prohibits services or accommodations that are not equal to those provided others. For example, persons with disabilities must not be limited to certain performances at a theater.

Separate benefit—Section 36.202(c) permits different or separate benefits or services only when necessary to provide persons with disabilities opportunities as effective as those provided others. This paragraph permitting separate benefits ''when necessary'' should be read together with §36.203(a), which requires integration in ''the most integrated setting appropriate to the needs of the individual.'' The preamble to that section provides further guidance on separate programs. Thus, this section would not prohibit the designation of parking spaces for persons with disabilities.

Each of the three paragraphs (a)–(c) prohibits discrimination against an individual or class of individuals ''either directly or through contractual, licensing, or other arrangements.'' The intent of the contractual prohibitions of these paragraphs is to prohibit a public accommodation from doing indirectly, through a contractual relationship, what it may not do directly. Thus, the ''individual or class of individuals'' referenced in the three paragraphs is intended to refer to the clients and customers of the public accommodation that entered into a contractual arrangement. It is not intended to encompass the clients or customers of other entities. A public accommodation, therefore, is not liable under this provision for discrimination that may be practiced by those with whom it has a contractual relationship, when that discrimination is not directed against its own clients or customers. For example, if an amusement park contracts with a food service company to operate its restaurants at the park, the amusement park is

not responsible for other operations of the food service company that do not involve clients or customers of the amusement park. Section 36.202(d) makes this clear by providing that the term ''individual or class of individuals'' refers to the clients or customers of the public accommodation that enters into the contractual, licensing, or other arrangement.

Section 36.203 Integrated Settings

Section 36.203 addresses the integration of persons with disabilities. The ADA recognizes that the provision of goods and services in an integrated manner is a fundamental tenet of nondiscrimination on the basis of disability. Providing segregated accommodations and services relegates persons with disabilities to the status of second-class citizens. For example, it would be a violation of this provision to require persons with mental disabilities to eat in the back room of a restaurant or to refuse to allow a person with a disability the full use of a health spa because of stereotypes about the person's ability to participate. Section 36.203(a) states that a public accommodation shall afford goods, services, facilities, privileges, advantages, and accommodations to an individual with a disability in the most integrated setting appropriate to the needs of the individual. Section 36.203(b) specifies that, notwithstanding the existence of separate or different programs or activities provided in accordance with this section, an individual with a disability shall not be denied the opportunity to participate in such programs or activities that are not separate or different. Section 306.203(c), which is derived from section 501(d) of the Americans with Disabilities Act, states that nothing in this part shall be construed to require an individual with a disability to accept an accommodation, aid, service, opportunity, or benefit that he or she chooses not to accept.

Taken together, these provisions are intended to prohibit exclusion and segregation of individuals with disabilities and the denial of equal opportunities enjoyed by others, based on, among other things, presumptions, patronizing attitudes, fears, and stereotypes about individuals with disabilities. Consistent with these standards, public accommodations are required to make decisions based on facts applicable to individuals and not on the basis of presumptions as to what a class of individuals with disabilities can or cannot do.

Sections 36.203 (b) and (c) make clear that individuals with disabilities cannot be denied the opportunity to participate in programs that are not separate or different. This is an important and overarching principle of the Americans with Disabilities Act. Separate, special, or different programs that are designed to provide a benefit to persons with disabilities cannot be used to restrict the participation of persons with disabilities in general, integrated activities.

For example, a person who is blind may wish to decline participating in a special museum tour that allows persons to touch sculptures in an exhibit and instead tour the exhibit at his or her own pace with the museum's recorded tour. It is not the intent of this section to require the person who is blind to avail himself or herself of the special tour. Modified participation for persons with disabilities must be a choice, not a requirement.

Further, it would not be a violation of this section for an establishment to offer recreational programs specially designed for children with mobility impairments in those limited circumstances. However, it would be a violation of this section if the entity then excluded these children from other recreational services made available to nondisabled children, or required children with disabilities to attend only designated programs.

Many commenters asked that the Department clarify a public accommodation's obligations within the integrated program when it offers a separate program, but an individual with a disability chooses not to participate in the separate program. It is impossible to make a blanket statement as to what level of auxiliary aids or modifications are required in the integrated program. Rather, each situation must be assessed individually. Assuming the integrated program would be appropriate for a particular individual, the extent to which that individual must be provided with modifications will depend not only on what the individual needs but also on the limitations set forth in subpart C. For example, it may constitute an undue burden for a particular public accommodation, which provides a full-time interpreter in its special guided tour for individuals with hearing impairments, to hire an additional interpreter for those individuals who choose to attend the integrated program. The Department cannot identify categorically the level of assistance or aid required in the integrated program.

The preamble to the proposed rule contained a statement that some interpreted as encouraging the continuation of separate schools, sheltered workshops, special recreational programs, and other similar programs. It is important to emphasize that §36.202(c) only calls for separate programs when such programs are ''necessary'' to provide as effective an opportunity to individuals with disabilities as to other individuals. Likewise, §36.203(a) only permits separate programs when a more integrated setting would not be ''appropriate.'' Separate programs are permitted, then, in only limited circumstances. The sentence at issue has been deleted from the preamble because it

was too broadly stated and had been erroneously interpreted as Departmental encouragement of separate programs without qualification.

The proposed rule's reference in §36.203(b) to separate programs or activities provided in accordance with ''this section'' has been changed to ''this subpart'' in recognition of the fact that separate programs or activities may, in some limited circumstances, be permitted not only by §36.203(a) but also by §36.202(c).

In addition, some commenters suggested that the individual with the disability is the only one who can decide whether a setting is ''appropriate'' and what the ''needs'' are. Others suggested that only the public accommodation can make these determinations. The regulation does not give exclusive responsibility to either party. Rather, the determinations are to be made based on an objective view, presumably one which would take into account views of both parties.

Some commenters expressed concern that §36.203(c), which states that nothing in the rule requires an individual with a disability to accept special accommodations and services provided under the ADA, could be interpreted to allow guardians of infants or older people with disabilities to refuse medical treatment for their wards. Section 36.203(c) has been revised to make it clear that paragraph (c) is inapplicable to the concern of the commenters. A new paragraph (c)(2) has been added stating that nothing in the regulation authorizes the representative or guardian of an individual with a disability to decline food, water, medical treatment, or medical services for that individual. New paragraph (c) clarifies that neither the ADA nor the regulation alters current Federal law ensuring the rights of incompetent individuals with disabilities to receive food, water, and medical treatment. See, *e.g.*, Child Abuse Amendments of 1984 (42 U.S.C. 5106a(b)(10), 5106g(10)); Rehabilitation Act of 1973, as amended (29 U.S.C 794); Developmentally Disabled Assistance and Bill of Rights Act (42 U.S.C. 6042).

Sections 36.203(c) (1) and (2) are based on section 501(d) of the ADA. Section §501(d) was designed to clarify that nothing in the ADA requires individuals with disabilities to accept special accommodations and services for individuals with disabilities that may segregate them:

The Committee added this section (501(d)) to clarify that nothing in the ADA is intended to permit discriminatory treatment on the basis of disability, even when such treatment is rendered under the guise of providing an accommodation, service, aid or benefit to the individual with disability. For example, a blind individual may choose not to avail himself or herself of the right to go to the front of a line, even if a particular public accommodation has chosen to offer such a modification of a policy for blind individuals. Or, a blind individual may choose to decline to participate in a special museum tour that allows persons to touch sculptures in an exhibit and instead tour the exhibits at his or her own pace with the museum's recorded tour.

(Judiciary report at 71–72.) The Act is not to be construed to mean that an individual with disabilities must accept special accommodations and services for individuals with disabilities when that individual chooses to participate in the regular services already offered. Because medical treatment, including treatment for particular conditions, is not a special accommodation or service for individuals with disabilities under section 501(d), neither the Act nor this part provides affirmative authority to suspend such treatment. Section 501(d) is intended to clarify that the Act is not designed to foster discrimination through mandatory acceptance of special services when other alternatives are provided; this concern does not reach to the provision of medical treatment for the disabling condition itself.

Section 36.213 makes clear that the limitations contained in subpart C are to be read into subpart B. Thus, the integration requirement is subject to the various defenses contained in subpart C, such as safety, if eligibility criteria are at issue (§36.301(b)), or fundamental alteration and undue burden, if the concern is provision of auxiliary aids (§36.303(a)).

Section 36.204 Administrative Methods

Section 36.204 specifies that an individual or entity shall not, directly, or through contractual or other arrangements, utilize standards or criteria or methods of administration that have the effect of discriminating on the basis of disability or that perpetuate the discrimination of others who are subject to common administrative control. The preamble discussion of §36.301 addresses eligibility criteria in detail.

Section 36.204 is derived from section 302(b)(1)(D) of the Americans with Disabilities Act, and it uses the same language used in the employment section of the ADA (section 102(b)(3)). Both sections incorporate a disparate impact standard to ensure the effectiveness of the legislative mandate to end discrimination. This standard is consistent with the interpretation of section 504 by the U.S. Supreme Court in *Alexander* v. *Choate,* 469 U.S. 287 (1985). The Court in *Choate* explained that members of Congress made numerous statements during passage of section 504 regarding eliminating architectural barriers, providing access to transportation, and eliminating discriminatory effects of job qualification procedures. The Court then noted: ''These statements would ring hollow if the resulting legislation could not rectify

the harms resulting from action that discriminated by effect as well as by design.'' *Id* at 297 (footnote omitted).

Of course, §36.204 is subject to the various limitations contained in subpart C including, for example, necessity (§36.301(a)), safety (§36.301(b)), fundamental alteration (§36.302(a)), readily achievable (§36.304(a)), and undue burden (§36.303(a)).

Section 36.205 Association

Section 36.205 implements section 302(b)(1)(E) of the Act, which provides that a public accommodation shall not exclude or otherwise deny equal goods, services, facilities, privileges, advantages, accommodations, or other opportunities to an individual or entity because of the known disability of an individual with whom the individual or entity is known to have a relationship or association. This section is unchanged from the proposed rule.

The individuals covered under this section include any individuals who are discriminated against because of their known association with an individual with a disability. For example, it would be a violation of this part for a day care center to refuse admission to a child because his or her brother has HIV disease.

This protection is not limited to those who have a familial relationship with the individual who has a disability. If a place of public accommodation refuses admission to a person with cerebral palsy and his or her companions, the companions have an independent right of action under the ADA and this section.

During the legislative process, the term ''entity'' was added to section 302(b)(1)(E) to clarify that the scope of the provision is intended to encompass not only persons who have a known association with a person with a disability, but also entities that provide services to or are otherwise associated with such individuals. This provision was intended to ensure that entities such as health care providers, employees of social service agencies, and others who provide professional services to persons with disabilities are not subjected to discrimination because of their professional association with persons with disabilities. For example, it would be a violation of this section to terminate the lease of an entity operating an independent living center for persons with disabilities, or to seek to evict a health care provider because that individual or entity provides services to persons with mental impairments.

Section 36.206 Retaliation or Coercion

Section 36.206 implements section 503 of the ADA, which prohibits retaliation against any individual who exercises his or her rights under the Act. This section is unchanged from the proposed rule. Paragraph (a) of §36.206 provides that no private entity or public entity shall discriminate against any individual because that individual has exercised his or her right to oppose any act or practice made unlawful by this part, or because that individual made a charge, testified, assisted, or participated in any manner in an investigation, proceeding, or hearing under the Act or this part.

Paragraph (b) provides that no private entity or public entity shall coerce, intimidate, threaten, or interfere with any individual in the exercise of his or her rights under this part or because that individual aided or encouraged any other individual in the exercise or enjoyment of any right granted or protected by the Act or this part.

Illustrations of practices prohibited by this section are contained in paragraph (c), which is modeled on a similar provision in the regulations issued by the Department of Housing and Urban Development to implement the Fair Housing Act (see 24 CFR 100.400(c)(1)). Prohibited actions may include:

(1) Coercing an individual to deny or limit the benefits, services, or advantages to which he or she is entitled under the Act or this part;

(2) Threatening, intimidating, or interfering with an individual who is seeking to obtain or use the goods, services, facilities, privileges, advantages, or accommodations of a public accommodation;

(3) Intimidating or threatening any person because that person is assisting or encouraging an individual or group entitled to claim the rights granted or protected by the Act or this part to exercise those rights; or

(4) Retaliating against any person because that person has participated in any investigation or action to enforce the Act or this part.

This section protects not only individuals who allege a violation of the Act or this part, but also any individuals who support or assist them. This section applies to all investigations or proceedings initiated under the Act or this part without regard to the ultimate resolution of the underlying allegations. Because this section prohibits any act of retaliation or coercion in response to an individual's effort to exercise rights established by the Act and this part (or to support the efforts of another individual), the section applies not only to public accommodations that are otherwise subject to this part, but also to individuals other than public accommodations or to public entities. For example, it would be a violation of the Act and this part for a private individual, e.g., a restaurant customer, to harass or intimidate an individual with a disability in an effort to prevent that individual from patronizing the restaurant. It would, likewise, be a violation of the Act and this part for a public entity to take adverse action against an employee who

appeared as a witness on behalf of an individual who sought to enforce the Act.

Section 36.207 Places of Public Accommodation Located in Private Residences

A private home used exclusively as a residence is not covered by title III because it is neither a ''commercial facility'' nor a ''place of public accommodation.'' In some situations, however, a private home is not used exclusively as a residence, but houses a place of public accommodation in all or part of a home (e.g., an accountant who meets with his or her clients at his or her residence). Section 36.207(a) provides that those portions of the private residence used in the operation of the place of public accommodation are covered by this part.

For instance, a home or a portion of a home may be used as a day care center during the day and a residence at night. If all parts of the house are used for the day care center, then the entire residence is a place of public accommodation because no part of the house is used exclusively as a residence. If an accountant uses one room in the house solely as his or her professional office, then a portion of the house is used exclusively as a place of public accommodation and a portion is used exclusively as a residence. Section 36.207 provides that when a portion of a residence is used exclusively as a residence, that portion is not covered by this part. Thus, the portions of the accountant's house, other than the professional office and areas and spaces leading to it, are not covered by this part. All of the requirements of this rule apply to the covered portions, including requirements to make reasonable modifications in policies, eliminate discriminatory eligibility criteria, take readily achievable measures to remove barriers or provide readily achievable alternatives (e.g., making house calls), provide auxiliary aids and services and undertake only accessible new construction and alterations.

Paragraph (b) was added in response to comments that sought clarification on the extent of coverage of the private residence used as the place of public accommodation. The final rule makes clear that the place of accommodation extends to all areas of the home used by clients and customers of the place of public accommodation. Thus, the ADA would apply to any door or entry way, hallways, a restroom, if used by customers and clients; and any other portion of the residence, interior or exterior, used by customers or clients of the public accommodation. This interpretation is simply an application of the general rule for all public accommodations, which extends statutory requirements to all portions of the facility used by customers and clients, including, if applicable, restrooms, hallways, and approaches to the public accommodation. As with other public accommodations, barriers at the entrance and on the sidewalk leading up to the public accommodation, if the sidewalk is under the control of the public accommodation, must be removed if doing so is readily achievable.

The Department recognizes that many businesses that operate out of personal residences are quite small, often employing only the homeowner and having limited total revenues. In these circumstances the effect of ADA coverage would likely be quite minimal. For example, because the obligation to remove existing architectural barriers is limited to those that are easily accomplishable without much difficulty or expense (*see* § 36.304), the range of required actions would be quite modest. It might not be readily achievable for such a place of public accommodation to remove any existing barriers. If it is not readily achievable to remove existing architectural barriers, a public accommodation located in a private residence may meet its obligations under the Act and this part by providing its goods or services to clients or customers with disabilities through the use of alternative measures, including delivery of goods or services in the home of the customer or client, to the extent that such alternative measures are readily achievable (*See* § 36.305).

Some commenters asked for clarification as to how the new construction and alteration standards of subpart D will apply to residences. The new construction standards only apply to the extent that the residence or portion of the residence was designed or intended for use as a public accommodation. Thus, for example, if a portion of a home is designed or constructed for use exclusively as a lawyer's office or for use both as a lawyer's office and for residential purposes, then it must be designed in accordance with the new construction standards in the appendix. Likewise, if a homeowner is undertaking alterations to convert all or part of his residence to a place of public accommodation, that work must be done in compliance with the alterations standards in the appendix.

The preamble to the proposed rule addressed the applicable requirements when a commercial facility is located in a private residence. That situation is now addressed in § 36.401(b) of subpart D.

Section 36.208 Direct Threat

Section 36.208(a) implements section 302(b)(3) of the Act by providing that this part does not require a public accommodation to permit an individual to participate in or benefit from the goods, services, facilities, privileges, advantages and accommodations of the public accommodation, if that individual poses a direct threat to the health or safety of others. This section is unchanged from the proposed rule.

The Department received a significant number of comments on this section. Commenters representing individuals with disabilities generally supported this provision, but suggested revisions to further limit its application. Commenters representing public accommodations generally endorsed modifications that would permit a public accommodation to exercise its own judgment in determining whether an individual poses a direct threat.

The inclusion of this provision is not intended to imply that persons with disabilities pose risks to others. It is intended to address concerns that may arise in this area. It establishes a strict standard that must be met before denying service to an individual with a disability or excluding that individual from participation.

Paragraph (b) of this section explains that a ''direct threat'' is a significant risk to the health or safety of others that cannot be eliminated by a modification of policies, practices, or procedures, or by the provision of auxiliary aids and services. This paragraph codifies the standard first applied by the Supreme Court in *School Board of Nassau County* v. *Arline,* 480 U.S. 273 (1987), in which the Court held that an individual with a contagious disease may be an ''individual with handicaps'' under section 504 of the Rehabilitation Act. In *Arline,* the Supreme Court recognized that there is a need to balance the interests of people with disabilities against legitimate concerns for public safety. Although persons with disabilities are generally entitled to the protection of this part, a person who poses a significant risk to others may be excluded if reasonable modifications to the public accommodation's policies, practices, or procedures will not eliminate that risk. The determination that a person poses a direct threat to the health or safety of others may not be based on generalizations or stereotypes about the effects of a particular disability; it must be based on an individual assessment that conforms to the requirements of paragraph (c) of this section.

Paragraph (c) establishes the test to use in determining whether an individual poses a direct threat to the health or safety of others. A public accommodation is required to make an individualized assessment, based on reasonable judgment that relies on current medical evidence or on the best available objective evidence, to determine: The nature, duration, and severity of the risk; the probability that the potential injury will actually occur; and whether reasonable modifications of policies, practices, or procedures will mitigate the risk. This is the test established by the Supreme Court in *Arline.* Such an inquiry is essential if the law is to achieve its goal of protecting disabled individuals from discrimination based on prejudice, stereotypes, or unfounded fear, while giving appropriate weight to legitimate concerns, such as the need to avoid exposing others to significant health and safety risks. Making this assessment will not usually require the services of a physician. Sources for medical knowledge include guidance from public health authorities, such as the U.S. Public Health Service, the Centers for Disease Control, and the National Institutes of Health, including the National Institute of Mental Health.

Many of the commenters sought clarification of the inquiry requirement. Some suggested that public accommodations should be prohibited from making any inquiries to determine if an individual with a disability would pose a direct threat to other persons. The Department believes that to preclude all such inquiries would be inappropriate. Under §36.301 of this part, a public accommodation is permitted to establish eligibility criteria necessary for the safe operation of the place of public accommodation. Implicit in that right is the right to ask if an individual meets the criteria. However, any eligibility or safety standard established by a public accommodation must be based on actual risk, not on speculation or stereotypes; it must be applied to all clients or customers of the place of public accommodation; and inquiries must be limited to matters necessary to the application of the standard.

Some commenters suggested that the test established in the *Arline* decision, which was developed in the context of an employment case, is too stringent to apply in a public accommodations context where interaction between the public accommodation and its client or customer is often very brief. One suggested alternative was to permit public accommodations to exercise ''good faith'' judgment in determining whether an individual poses a direct threat, particularly when a public accommodation is dealing with a client or customer engaged in disorderly or disruptive behavior.

The Department believes that the ADA clearly requires that any determination to exclude an individual from participation must be based on an objective standard. A public accommodation may establish neutral eligibility criteria as a condition of receiving its goods or services. As long as these criteria are necessary for the safe provision of the public accommodation's goods and services and applied neutrally to all clients or customers, regardless of whether they are individuals with disabilities, a person who is unable to meet the criteria may be excluded from participation without inquiry into the underlying reason for the inability to comply. In places of public accommodation such as restaurants, theaters, or hotels, where the contact between the public accommodation and its clients is transitory, the uniform application of an eligibility standard precluding violent or disruptive behavior by any

client or customer should be sufficient to enable a public accommodation to conduct its business in an orderly manner.

Some other commenters asked for clarification of the application of this provision to persons, particularly children, who have short-term, contagious illnesses, such as fevers, influenza, or the common cold. It is common practice in schools and day care settings to exclude persons with such illnesses until the symptoms subside. The Department believes that these commenters misunderstand the scope of this rule. The ADA only prohibits discrimination against an individual with a disability. Under the ADA and this part, a ''disability'' is defined as a physical or mental impairment that substantially limits one or more major life activities. Common, short-term illnesses that predictably resolve themselves within a matter of days do not ''substantially limit'' a major life activity; therefore, it is not a violation of this part to exclude an individual from receiving the services of a public accommodation because of such transitory illness. However, this part does apply to persons who have long-term illnesses. Any determination with respect to a person who has a chronic or long-term illness must be made in compliance with the requirements of this section.

Section 36.209 Illegal Use of Drugs

Section 36.209 effectuates section 510 of the ADA, which clarifies the Act's application to people who use drugs illegally. Paragraph (a) provides that this part does not prohibit discrimination based on an individual's current illegal use of drugs.

The Act and the regulation distinguish between illegal use of drugs and the legal use of substances, whether or not those substances are ''controlled substances,'' as defined in the Controlled Substances Act (21 U.S.C. 812). Some controlled substances are prescription drugs that have legitimate medical uses. Section 36.209 does not affect use of controlled substances pursuant to a valid prescription, under supervision by a licensed health care professional, or other use that is authorized by the Controlled Substances Act or any other provision of Federal law. It does apply to illegal use of those substances, as well as to illegal use of controlled substances that are not prescription drugs. The key question is whether the individual's use of the substance is illegal, not whether the substance has recognized legal uses. Alcohol is not a controlled substance, so use of alcohol is not addressed by §36.209. Alcoholics are individuals with disabilities, subject to the protections of the statute.

A distinction is also made between the use of a substance and the status of being addicted to that substance. Addiction is a disability, and addicts are individuals with disabilities protected by the Act. The protection, however, does not extend to actions based on the illegal use of the substance. In other words, an addict cannot use the fact of his or her addiction as a defense to an action based on illegal use of drugs. This distinction is not artificial. Congress intended to deny protection to people who engage in the illegal use of drugs, whether or not they are addicted, but to provide protection to addicts so long as they are not currently using drugs.

A third distinction is the difficult one between current use and former use. The definition of ''current illegal use of drugs'' in §36.104, which is based on the report of the Conference Committee, H.R. Conf. Rep. No. 596, 101st Cong., 2d Sess. 64 (1990), is ''illegal use of drugs that occurred recently enough to justify a reasonable belief that a person's drug use is current or that continuing use is a real and ongoing problem.''

Paragraph (a)(2)(i) specifies that an individual who has successfully completed a supervised drug rehabilitation program or has otherwise been rehabilitated successfully and who is not engaging in current illegal use of drugs is protected. Paragraph (a)(2)(ii) clarifies that an individual who is currently participating in a supervised rehabilitation program and is not engaging in current illegal use of drugs is protected. Paragraph (a)(2)(iii) provides that a person who is erroneously regarded as engaging in current illegal use of drugs, but who is not engaging in such use, is protected.

Paragraph (b) provides a limited exception to the exclusion of current illegal users of drugs from the protections of the Act. It prohibits denial of health services, or services provided in connection with drug rehabilitation, to an individual on the basis of current illegal use of drugs, if the individual is otherwise entitled to such services. As explained further in the discussion of §36.302, a health care facility that specializes in a particular type of treatment, such as care of burn victims, is not required to provide drug rehabilitation services, but it cannot refuse to treat an individual's burns on the grounds that the individual is illegally using drugs.

A commenter argued that health care providers should be permitted to use their medical judgment to postpone discretionary medical treatment of individuals under the influence of alcohol or drugs. The regulation permits a medical practitioner to take into account an individual's use of drugs in determining appropriate medical treatment. Section 36.209 provides that the prohibitions on discrimination in this part do not apply when the public accommodation acts on the basis of current illegal use of drugs. Although those prohibitions do apply under paragraph (b), the limitations established under this part also apply. Thus, under §36.208, a health care provider or other public accommodation covered under §36.209(b) may exclude an individual whose current illegal

use of drugs poses a direct threat to the health or safety of others, and, under §36.301, a public accommodation may impose or apply eligibility criteria that are necessary for the provision of the services being offered, and may impose legitimate safety requirements that are necessary for safe operation. These same limitations also apply to individuals with disabilities who use alcohol or prescription drugs. The Department believes that these provisions address this commenter's concerns.

Other commenters pointed out that abstention from the use of drugs is an essential condition for participation in some drug rehabilitation programs, and may be a necessary requirement in inpatient or residential settings. The Department believes that this comment is well-founded. Congress clearly did not intend to exclude from drug treatment programs the very individuals who need such programs because of their use of drugs. In such a situation, however, once an individual has been admitted to a program, abstention may be a necessary and appropriate condition to continued participation. The final rule therefore provides that a drug rehabilitation or treatment program may deny participation to individuals who use drugs while they are in the program.

Paragraph (c) expresses Congress' intention that the Act be neutral with respect to testing for illegal use of drugs. This paragraph implements the provision in section 510(b) of the Act that allows entities ''to adopt or administer reasonable policies or procedures, including but not limited to drug testing,'' that ensure an individual who is participating in a supervised rehabilitation program, or who has completed such a program or otherwise been rehabilitated successfully, is no longer engaging in the illegal use of drugs. Paragraph (c) is not to be construed to encourage, prohibit, restrict, or authorize the conducting of testing for the illegal use of drugs.

Paragraph (c) of §36.209 clarifies that it is not a violation of this part to adopt or administer reasonable policies or procedures to ensure that an individual who formerly engaged in the illegal use of drugs is not currently engaging in illegal use of drugs. Any such policies or procedures must, of course, be reasonable, and must be designed to identify accurately the illegal use of drugs. This paragraph does not authorize inquiries, tests, or other procedures that would disclose use of substances that are not controlled substances or are taken under supervision by a licensed health care professional, or other uses authorized by the Controlled Substances Act or other provisions of Federal law, because such uses are not included in the definition of ''illegal use of drugs.''

One commenter argued that the rule should permit testing for lawful use of prescription drugs, but most favored the explanation that tests must be limited to *unlawful* use in order to avoid revealing the use of prescription medicine used to treat disabilities. Tests revealing legal use of prescription drugs might violate the prohibition in §36.301 of attempts to unnecessarily identify the existence of a disability.

Section 36.210 Smoking

Section 36.210 restates the clarification in section 501(b) of the Act that the Act does not preclude the prohibition of, or imposition of restrictions on, smoking. Some commenters argued that §36.210 does not go far enough, and that the regulation should prohibit smoking in all places of public accommodation. The reference to smoking in section 501 merely clarifies that the Act does not require public accommodations to accommodate smokers by permitting them to smoke in places of public accommodations.

Section 36.211 Maintenance of Accessible Features

Section 36.211 provides that a public accommodation shall maintain in operable working condition those features of facilities and equipment that are required to be readily accessible to and usable by persons with disabilities by the Act or this part. The Act requires that, to the maximum extent feasible, facilities must be accessible to, *and usable by,* individuals with disabilities. This section recognizes that it is not sufficient to provide features such as accessible routes, elevators, or ramps, if those features are not maintained in a manner that enables individuals with disabilities to use them. Inoperable elevators, locked accessible doors, or ''accessible'' routes that are obstructed by furniture, filing cabinets, or potted plants are neither ''accessible to'' nor ''usable by'' individuals with disabilities.

Some commenters objected that this section appeared to establish an absolute requirement and suggested that language from the preamble be included in the text of the regulation. It is, of course, impossible to guarantee that mechanical devices will never fail to operate. Paragraph (b) of the final regulation provides that this section does not prohibit isolated or temporary interruptions in service or access due to maintenance or repairs. This paragraph is intended to clarify that temporary obstructions or isolated instances of mechanical failure would not be considered violations of the Act or this part. However, allowing obstructions or ''out of service'' equipment to persist beyond a reasonable period of time would violate this part, as would repeated mechanical failures due to improper or inadequate maintenance. Failure of the public accommodation to ensure that accessible routes are properly maintained and free of obstructions, or failure to arrange prompt

repair of inoperable elevators or other equipment intended to provide access, would also violate this part.

Other commenters requested that this section be expanded to include specific requirements for inspection and maintenance of equipment, for training staff in the proper operation of equipment, and for maintenance of specific items. The Department believes that this section properly establishes the general requirement for maintaining access and that further, more detailed requirements are not necessary.

Section 36.212 Insurance

The Department received numerous comments on proposed §36.212. Most supported the proposed regulation but felt that it did not go far enough in protecting individuals with disabilities and persons associated with them from discrimination. Many commenters argued that language from the preamble to the proposed regulation should be included in the text of the final regulation. Other commenters argued that even that language was not strong enough, and that more stringent standards should be established. Only a few commenters argued that the Act does not apply to insurance underwriting practices or the terms of insurance contracts. These commenters cited language from the Senate committee report (S. Rep. No. 116, 101st Cong., 1st Sess., at 84–86 (1989) (hereinafter ''Senate report'')), indicating that Congress did not intend to affect existing insurance practices.

The Department has decided to adopt the language of the proposed rule without change. Sections 36.212 (a) and (b) restate section 501(c) of the Act, which provides that the Act shall not be construed to restrict certain insurance practices on the part of insurance companies and employers, as long as such practices are not used to evade the purposes of the Act. Section 36.212(c) is a specific application of §36.202(a), which prohibits denial of participation on the basis of disability. It provides that a public accommodation may not refuse to serve an individual with a disability because of limitations on coverage or rates in its insurance policies (see Judiciary report at 56).

Many commenters supported the requirements of §36.212(c) in the proposed rule because it addressed an important reason for denial of services by public accommodations. One commenter argued that services could be denied if the insurance coverage required exclusion of people whose disabilities were reasonably related to the risks involved in that particular place of public accommodation. Sections 36.208 and 36.301 establish criteria for denial of participation on the basis of legitimate safety concerns. This paragraph does not prohibit consideration of such concerns in insurance policies, but provides that any exclusion on the basis of disability must be based on the permissible criteria, rather than on the terms of the insurance contract.

Language in the committee reports indicates that Congress intended to reach insurance practices by prohibiting differential treatment of individuals with disabilities in insurance offered by public accommodations unless the differences are justified. ''Under the ADA, a person with a disability cannot be denied insurance or be subject to different terms or conditions of insurance based on disability alone, if the disability does not pose increased risks'' (Senate report at 84; Education and Labor report at 136). Section 501(c) (1) of the Act was intended to emphasize that ''insurers may continue to sell to and underwrite individuals applying for life, health, or other insurance on an individually underwritten basis, or to service such insurance products, *so long as the standards used are based on sound actuarial data and not on speculation*'' (Judiciary report at 70 (emphasis added); see also Senate report at 85; Education and Labor report at 137).

The committee reports indicate that underwriting and classification of risks must be ''based on sound actuarial principles or be related to actual or reasonably anticipated experience'' (see, *e.g.*, Judiciary report at 71). Moreover, ''while a plan which limits certain kinds of coverage based on classification of risk would be allowed * * *, the plan may not refuse to insure, or refuse to continue to insure, or limit the amount, extent, or kind of coverage available to an individual, or charge a different rate for the same coverage solely because of a physical or mental impairment, except where the refusal, limitation, or rate differential is based on sound actuarial principles or is related to actual or reasonably anticipated experience'' (Senate report at 85; Education and Labor report at 136–37; Judiciary report at 71). The ADA, therefore, does not prohibit use of legitimate actuarial considerations to justify differential treatment of individuals with disabilities in insurance.

The committee reports provide some guidance on how nondiscrimination principles in the disability rights area relate to insurance practices. For example, a person who is blind may not be denied coverage based on blindness independent of actuarial risk classification. With respect to group health insurance coverage, an individual with a pre-existing condition may be denied coverage for that condition for the period specified in the policy, but cannot be denied coverage for illness or injuries unrelated to the pre-existing condition. Also, a public accommodation may offer insurance policies that limit coverage for certain procedures or treatments, but may not entirely deny coverage to a person with a disability.

The Department requested comment on the extent to which data that would establish statistically sound correlations are available. Numerous commenters cited pervasive problems in the availability and cost of insurance for individuals with disabilities and parents of children with disabilities. No commenters cited specific data, or sources of data, to support specific exclusionary practices. Several commenters reported that, even when statistics are available, they are often outdated and do not reflect current medical technology and treatment methods. Concern was expressed that adequate efforts are not made to distinguish those individuals who are high users of health care from individuals in the same diagnostic groups who may be low users of health care. One insurer reported that ''hard data and actuarial statistics are not available to provide precise numerical justifications for every underwriting determination,'' but argued that decisions may be based on ''logical principles generally accepted by actuarial science and fully consistent with state insurance laws.'' The commenter urged that the Department recognize the validity of information other than statistical data as a basis for insurance determinations.

The most frequent comment was a recommendation that the final regulation should require the insurance company to provide a copy of the actuarial data on which its actions are based when requested by the applicant. Such a requirement would be beyond anything contemplated by the Act or by Congress and has therefore not been included in the Department's final rule. Because the legislative history of the ADA clarifies that different treatment of individuals with disabilities in insurance may be justified by sound actuarial data, such actuarial data will be critical to any potential litigation on this issue. This information would presumably be obtainable in a court proceeding where the insurer's actuarial data was the basis for different treatment of persons with disabilities. In addition, under some State regulatory schemes, insurers may have to file such actuarial information with the State regulatory agency and this information may be obtainable at the State level.

A few commenters representing the insurance industry conceded that underwriting practices in life and health insurance are clearly covered, but argued that property and casualty insurance are not covered. The Department sees no reason for this distinction. Although life and health insurance are the areas where the regulation will have its greatest application, the Act applies equally to unjustified discrimination in all types of insurance provided by public accommodations. A number of commenters, for example, reported difficulties in obtaining automobile insurance because of their disabilities, despite their having good driving records.

Section 36.213 Relationship of Subpart 8 to Subparts C and D

This section explains that subpart B sets forth the general principles of nondiscrimination applicable to all entities subject to this regulation, while subparts C and D provide guidance on the application of this part to specific situations. The specific provisions in subparts C and D, including the limitations on those provisions, control over the general provisions in circumstances where both specific and general provisions apply. Resort to the general provisions of subpart B is only appropriate where there are no applicable specific rules of guidance in subparts C or D. This interaction between the specific requirements and the general requirements operates with regard to contractual obligations as well.

One illustration of this principle is its application to the obligation of a public accommodation to provide access to services by removal of architectural barriers or by alternatives to barrier removal. The general requirement, established in subpart B by §36.203, is that a public accommodation must provide its services to individuals with disabilities in the most integrated setting appropriate. This general requirement would appear to categorically prohibit ''segregated'' seating for persons in wheelchairs. Section 36.304, however, only requires removal of architectural barriers to the extent that removal is ''readily achievable.'' If providing access to all areas of a restaurant, for example, would not be ''readily achievable,'' a public accommodation may provide access to selected areas only. Also, §36.305 provides that, where barrier removal is not readily achievable, a public accommodation may use alternative, readily achievable methods of making services available, such as curbside service or home delivery. Thus, in this manner, the specific requirements of §§36.304 and 36.305 control over the general requirement of §36.203.

Subpart C—Specific Requirements

In general, subpart C implements the ''specific prohibitions'' that comprise section 302(b)(2) of the ADA. It also addresses the requirements of section 309 of the ADA regarding examinations and courses.

Section 36.301 Eligibility Criteria

Section 36.301 of the rule prohibits the imposition or application of eligibility criteria that screen out or tend to screen out an individual with a disability or any class of individuals with disabilities from fully and equally enjoying any goods, services, facilities, privileges, advantages, and accommodations, unless such criteria can be shown to be

necessary for the provision of the goods, services, facilities, privileges, advantages, or accommodations being offered. This prohibition is based on section 302(b)(2)(A)(i) of the ADA.

It would violate this section to establish exclusive or segregative eligibility criteria that would bar, for example, all persons who are deaf from playing on a golf course or all individuals with cerebral palsy from attending a movie theater, or limit the seating of individuals with Down's syndrome to only particular areas of a restaurant. The wishes, tastes, or preferences of other customers may not be asserted to justify criteria that would exclude or segregate individuals with disabilities.

Section 36.301 also prohibits attempts by a public accommodation to unnecessarily identify the existence of a disability; for example, it would be a violation of this section for a retail store to require an individual to state on a credit application whether the applicant has epilepsy, mental illness, or any other disability, or to inquire unnecessarily whether an individual has HIV disease.

Section 36.301 also prohibits policies that unnecessarily impose requirements or burdens on individuals with disabilities that are not placed on others. For example, public accommodations may not require that an individual with a disability be accompanied by an attendant. As provided by §36.306, however, a public accommodation is not required to provide services of a personal nature including assistance in toileting, eating, or dressing.

Paragraph (c) of §36.301 provides that public accommodations may not place a surcharge on a particular individual with a disability or any group of individuals with disabilities to cover the costs of measures, such as the provision of auxiliary aids and services, barrier removal, alternatives to barrier removal, and reasonable modifications in policies, practices, and procedures, that are required to provide that individual or group with the nondiscriminatory treatment required by the Act or this part.

A number of commenters inquired as to whether deposits required for the use of auxiliary aids, such as assistive listening devices, are prohibited surcharges. It is the Department's view that reasonable, completely refundable, deposits are not to be considered surcharges prohibited by this section. Requiring deposits is an important means of ensuring the availability of equipment necessary to ensure compliance with the ADA.

Other commenters sought clarification as to whether §36.301(c) prohibits professionals from charging for the additional time that it may take in certain cases to provide services to an individual with disabilities. The Department does not intend §36.301(c) to prohibit professionals who bill on the basis of time from charging individuals with disabilities on that basis. However, fees may not be charged for the provision of auxiliary aids and services, barrier removal, alternatives to barrier removal, reasonable modifications in policies, practices, and procedures, or any other measures necessary to ensure compliance with the ADA.

Other commenters inquired as to whether day care centers may charge for extra services provided to individuals with disabilities. As stated above, §36.302(c) is intended only to prohibit charges for measures necessary to achieve compliance with the ADA.

Another commenter asserted that charges may be assessed for home delivery provided as an alternative to barrier removal under §36.305, when home delivery is provided to all customers for a fee. Charges for home delivery are permissible if home delivery is not considered an alternative to barrier removal. If the public accommodation offers an alternative, such as curb, carry-out, or sidewalk service for which no surcharge is assessed, then it may charge for home delivery in accordance with its standard pricing for home delivery.

In addition, §36.301 prohibits the imposition of criteria that ''tend to'' screen out an individual with a disability. This concept, which is derived from current regulations under section 504 (see, *e.g.,* 45 CFR 84.13), makes it discriminatory to impose policies or criteria that, while not creating a direct bar to individuals with disabilities, indirectly prevent or limit their ability to participate. For example, requiring presentation of a driver's license as the sole means of identification for purposes of paying by check would violate this section in situations where, for example, individuals with severe vision impairments or developmental disabilities or epilepsy are ineligible to receive a driver's license and the use of an alternative means of identification, such as another photo I.D. or credit card, is feasible.

A public accommodation may, however, impose neutral rules and criteria that screen out, or tend to screen out, individuals with disabilities, if the criteria are necessary for the safe operation of the public accommodation. Examples of safety qualifications that would be justifiable in appropriate circumstances would include height requirements for certain amusement park rides or a requirement that all participants in a recreational rafting expedition be able to meet a necessary level of swimming proficiency. Safety requirements must be based on actual risks and not on speculation, stereotypes, or generalizations about individuals with disabilities.

Section 36.302 Modifications in Policies, Practices, or Procedures

Section 36.302 of the rule prohibits the failure to make reasonable modifications in policies, practices, and procedures when such

modifications may be necessary to afford any goods, services, facilities, privileges, advantages, or accommodations, unless the entity can demonstrate that making such modifications would fundamentally alter the nature of such goods, services, facilities, privileges, advantages, or accommodations. This prohibition is based on section 302(b)(2)(A)(ii) of the ADA.

For example, a parking facility would be required to modify a rule barring all vans or all vans with raised roofs, if an individual who uses a wheelchair-accessible van wishes to park in that facility, and if overhead structures are high enough to accommodate the height of the van. A department store may need to modify a policy of only permitting one person at a time in a dressing room, if an individual with mental retardation needs and requests assistance in dressing from a companion. Public accommodations may need to revise operational policies to ensure that services are available to individuals with disabilities. For instance, a hotel may need to adopt a policy of keeping an accessible room unoccupied until an individual with a disability arrives at the hotel, assuming the individual has properly reserved the room.

One example of application of this principle is specifically included in a new §36.302(d) on check-out aisles. That paragraph provides that a store with check-out aisles must ensure that an adequate number of accessible check-out aisles is kept open during store hours, or must otherwise modify its policies and practices, in order to ensure that an equivalent level of convenient service is provided to individuals with disabilities as is provided to others. For example, if only one check-out aisle is accessible, and it is generally used for express service, one way of providing equivalent service is to allow persons with mobility impairments to make all of their purchases at that aisle. This principle also applies with respect to other accessible elements and services. For example, a particular bank may be in compliance with the accessibility guidelines for new construction incorporated in appendix A with respect to automated teller machines (ATM) at a new branch office by providing one accessible walk-up machine at that location, even though an adjacent walk-up ATM is not accessible and the drive-up ATM is not accessible. However, the bank would be in violation of this section if the accessible ATM was located in a lobby that was locked during evening hours while the drive-up ATM was available to customers without disabilities during those same hours. The bank would need to ensure that the accessible ATM was available to customers during the hours that any of the other ATM's was available.

A number of commenters inquired as to the relationship between this section and §36.307, ''Accessible or special goods.'' Under §36.307, a public accommodation is not required to alter its inventory to include accessible or special goods that are designed for, or facilitate use by, individuals with disabilities. The rule enunciated in §36.307 is consistent with the ''fundamental alteration'' defense to the reasonable modifications requirement of §36.302. Therefore, §36.302 would not require the inventory of goods provided by a public accommodation to be altered to include goods with accessibility features. For example, §36.302 would not require a bookstore to stock Brailled books or order Brailled books, if it does not do so in the normal course of its business.

The rule does not require modifications to the legitimate areas of specialization of service providers. Section 36.302(b) provides that a public accommodation may refer an individual with a disability to another public accommodation, if that individual is seeking, or requires, treatment or services outside of the referring public accommodation's area of specialization, and if, in the normal course of its operations, the referring public accommodation would make a similar referral for an individual without a disability who seeks or requires the same treatment or services.

For example, it would not be discriminatory for a physician who specializes only in burn treatment to refer an individual who is deaf to another physician for treatment of an injury other than a burn injury. To require a physician to accept patients outside of his or her specialty would fundamentally alter the nature of the medical practice and, therefore, not be required by this section.

A clinic specializing exclusively in drug rehabilitation could similarly refuse to treat a person who is not a drug addict, but could not refuse to treat a person who is a drug addict simply because the patient tests positive for HIV. Conversely, a clinic that specializes in the treatment of individuals with HIV could refuse to treat an individual that does not have HIV, but could not refuse to treat a person for HIV infection simply because that person is also a drug addict.

Some commenters requested clarification as to how this provision would apply to situations where manifestations of the disability in question, itself, would raise complications requiring the expertise of a different practitioner. It is not the Department's intention in §36.302(b) to prohibit a physician from referring an individual with a disability to another physician, if the disability itself creates specialized complications for the patient's health that the physician lacks the experience or knowledge to address (see Education and Labor report at 106).

Section 36.302(c)(1) requires that a public accommodation modify its policies, practices, or procedures to permit the use of a

service animal by an individual with a disability in any area open to the general public. The term ''service animal'' is defined in §36.104 to include guide dogs, signal dogs, or any other animal individually trained to provide assistance to an individual with a disability.

A number of commenters pointed to the difficulty of making the distinction required by the proposed rule between areas open to the general public and those that are not. The ambiguity and uncertainty surrounding these provisions has led the Department to adopt a single standard for all public accommodations.

Section 36.302(c)(1) of the final rule now provides that ''[g]enerally, a public accommodation shall modify policies, practices, and procedures to permit the use of a service animal by an individual with a disability.'' This formulation reflects the general intent of Congress that public accommodations take the necessary steps to accommodate service animals and to ensure that individuals with disabilities are not separated from their service animals. It is intended that the broadest feasible access be provided to service animals in all places of public accommodation, including movie theaters, restaurants, hotels, retail stores, hospitals, and nursing homes (see Education and Labor report at 106; Judiciary report at 59). The section also acknowledges, however, that, in rare circumstances, accommodation of service animals may not be required because a fundamental alteration would result in the nature of the goods, services, facilities, privileges, or accommodations offered or provided, or the safe operation of the public accommodation would be jeopardized.

As specified in §36.302(c)(2), the rule does not require a public accommodation to supervise or care for any service animal. If a service animal must be separated from an individual with a disability in order to avoid a fundamental alteration or a threat to safety, it is the responsibility of the individual with the disability to arrange for the care and supervision of the animal during the period of separation.

A museum would not be required by §36.302 to modify a policy barring the touching of delicate works of art in order to enhance the participation of individuals who are blind, if the touching threatened the integrity of the work. Damage to a museum piece would clearly be a fundamental alteration that is not required by this section.

Section 36.303 Auxiliary Aids and Services.

Section 36.303 of the final rule requires a public accommodation to take such steps as may be necessary to ensure that no individual with a disability is excluded, denied services, segregated or otherwise treated differently than other individuals because of the absence of auxiliary aids and services, unless the public accommodation can demonstrate that taking such steps would fundamentally alter the nature of the goods, services, facilities, advantages, or accommodations being offered or would result in an undue burden. This requirement is based on section 302(b)(2)(A)(iii) of the ADA.

Implicit in this duty to provide auxiliary aids and services is the underlying obligation of a public accommodation to communicate effectively with its customers, clients, patients, or participants who have disabilities affecting hearing, vision, or speech. To give emphasis to this underlying obligation, §36.303(c) of the rule incorporates language derived from section 504 regulations for federally conducted programs (see *e.g.*, 28 CFR 39.160(a)) that requires that appropriate auxiliary aids and services be furnished to ensure that communication with persons with disabilities is as effective as communication with others.

Auxiliary aids and services include a wide range of services and devices for ensuring effective communication. Use of the most advanced technology is not required so long as effective communication is ensured. The Department's proposed §36.303(b) provided a list of examples of auxiliary aids and services that was taken from the definition of auxiliary aids and services in section 3(1) of the ADA and was supplemented by examples from regulations implementing section 504 in federally conducted programs (see *e.g.*, 28 CFR 39.103). A substantial number of commenters suggested that additional examples be added to this list. The Department has added several items to this list but wishes to clarify that the list is not an all-inclusive or exhaustive catalogue of possible or available auxiliary aids or services. It is not possible to provide an exhaustive list, and such an attempt would omit new devices that will become available with emerging technology.

The Department has added videotext displays, computer-aided transcription services, and open and closed captioning to the list of examples. Videotext displays have become an important means of accessing auditory communications through a public address system. Transcription services are used to relay aurally delivered material almost simultaneously in written form to persons who are deaf or hard of hearing. This technology is often used at conferences, conventions, and hearings. While the proposed rule expressly included television decoder equipment as an auxiliary aid or service, it did not mention captioning itself. The final rule rectifies this omission by mentioning both closed and open captioning.

In this section, the Department has changed the proposed rule's phrase, ''orally delivered materials,'' to the phrase, ''aurally delivered materials.'' This new phrase tracks the language in the definition of ''auxiliary aids and services'' in section 3 of the ADA

and is meant to include nonverbal sounds and alarms and computer-generated speech.

Several persons and organizations requested that the Department replace the term ''telecommunications devices for deaf persons'' or ''TDD's'' with the term ''text telephone.'' The Department has declined to do so. The Department is aware that the Architectural and Transportation Barriers Compliance Board has used the phrase ''text telephone'' in lieu of the statutory term ''TDD'' in its final accessibility guidelines. Title IV of the ADA, however, uses the term ''Telecommunications Device for the Deaf,'' and the Department believes it would be inappropriate to abandon this statutory term at this time.

Paragraph (b)(2) lists examples of aids and services for making visually delivered materials accessible to persons with visual impairments. Many commenters proposed additional examples such as signage or mapping, audio description services, secondary auditory programs (SAP), telebraillers, and reading machines. While the Department declines to add these items to the list in the regulation, they may be considered appropriate auxiliary aids and services.

Paragraph (b)(3) refers to the acquisition or modification of equipment or devices. For example, tape players used for an audio-guided tour of a museum exhibit may require the addition of Brailled adhesive labels to the buttons on a reasonable number of the tape players to facilitate their use by individuals who are blind. Similarly, permanent or portable assistive listening systems for persons with hearing impairments may be required at a hotel conference center.

Several commenters suggested the addition of current technological innovations in microelectronics and computerized control systems (e.g., voice recognition systems, automatic dialing telephones, and infrared elevator and light control systems) to the list of auxiliary aids and services. The Department interprets auxiliary aids and services as those aids and services designed to provide effective communications, i. e., making aurally and visually delivered information available to persons with hearing, speech, and vision impairments. Methods of making services, programs, or activities accessible to, or usable by, individuals with mobility or manual dexterity impairments are addressed by other sections of this part, including the requirements for modifications in policies, practices, or procedures (§36.302), the elimination of existing architectural barriers (§36.304), and the provision of alternatives to barriers removal (§36.305).

Paragraph (b)(4) refers to other similar services and actions. Several commenters asked for clarification that ''similar services and actions'' include retrieving items from shelves, assistance in reaching a marginally accessible seat, pushing a barrier aside in order to provide an accessible route, or assistance in removing a sweater or coat. While retrieving an item from a shelf might be an ''auxiliary aid or service'' for a blind person who could not locate the item without assistance, it might be a readily achievable alternative to barrier removal for a person using a wheelchair who could not reach the shelf, or a reasonable modification to a self-service policy for an individual who lacked the ability to grasp the item. (Of course, a store would not be required to provide a personal shopper.) As explained above, auxiliary aids and services are those aids and services required to provide effective communications. Other forms of assistance are more appropriately addressed by other provisions of the final rule.

The auxiliary aid requirement is a flexible one. A public accommodation can choose among various alternatives as long as the result is effective communication. For example, a restaurant would not be required to provide menus in Braille for patrons who are blind, if the waiters in the restaurant are made available to read the menu. Similarly, a clothing boutique would not be required to have Brailled price tags if sales personnel provide price information orally upon request; and a bookstore would not be required to make available a sign language interpreter, because effective communication can be conducted by notepad.

A critical determination is what constitutes an effective auxiliary aid or service. The Department's proposed rule recommended that, in determining what auxiliary aid to use, the public accommodation consult with an individual before providing him or her with a particular auxiliary aid or service. This suggestion sparked a significant volume of public comment. Many persons with disabilities, particularly persons who are deaf or hard of hearing, recommended that the rule should require that public accommodations give ''primary consideration'' to the ''expressed choice'' of an individual with a disability. These commenters asserted that the proposed rule was inconsistent with congressional intent of the ADA, with the Department's proposed rule implementing title II of the ADA, and with longstanding interpretations of section 504 of the Rehabilitation Act.

Based upon a careful review of the ADA legislative history, the Department believes that Congress did not intend under title III to impose upon a public accommodation the requirement that it give primary consideration to the request of the individual with a disability. To the contrary, the legislative history demonstrates congressional intent to strongly encourage consulting with persons with disabilities. In its analysis of the ADA's auxiliary aids requirement for public accommodations, the House Education and Labor Committee stated that it ''expects'' that

''public accommodation(s) will consult with the individual with a disability before providing a particular auxiliary aid or service'' (Education and Labor report at 107). Some commenters also cited a different committee statement that used mandatory language as evidence of legislative intent to require primary consideration. However, this statement was made in the context of reasonable accommodations required by title I with respect to employment (Education and Labor report at 67). Thus, the Department finds that strongly encouraging consultation with persons with disabilities, in lieu of mandating primary consideration of their expressed choice, is consistent with congressional intent.

The Department wishes to emphasize that public accommodations must take steps necessary to ensure that an individual with a disability will not be excluded, denied services, segregated or otherwise treated differently from other individuals because of the use of inappropriate or ineffective auxiliary aids. In those situations requiring an interpreter, the public accommodations must secure the services of a qualified interpreter, unless an undue burden would result.

In the analysis of §36.303(c) in the proposed rule, the Department gave as an example the situation where a note pad and written materials were insufficient to permit effective communication in a doctor's office when the matter to be decided was whether major surgery was necessary. Many commenters objected to this statement, asserting that it gave the impression that only decisions about major surgery would merit the provision of a sign language interpreter. The statement would, as the commenters also claimed, convey the impression to other public accommodations that written communications would meet the regulatory requirements in all but the most extreme situations. The Department, when using the example of major surgery, did not intend to limit the provision of interpreter services to the most extreme situations.

Other situations may also require the use of interpreters to ensure effective communication depending on the facts of the particular case. It is not difficult to imagine a wide range of communications involving areas such as health, legal matters, and finances that would be sufficiently lengthy or complex to require an interpreter for effective communication. In some situations, an effective alternative to use of a notepad or an interpreter may be the use of a computer terminal upon which the representative of the public accommodation and the customer or client can exchange typewritten messages.

Section 36.303(d) specifically addresses requirements for TDD's. Partly because of the availability of telecommunications relay services to be established under title IV of the ADA, §36.303(d)(2) provides that a public accommodation is not required to use a telecommunication device for the deaf (TDD) in receiving or making telephone calls incident to its operations. Several commenters were concerned that relay services would not be sufficient to provide effective access in a number of situations. Commenters argued that relay systems (1) do not provide effective access to the automated systems that require the caller to respond by pushing a button on a touch tone phone, (2) cannot operate fast enough to convey messages on answering machines, or to permit a TDD user to leave a recorded message, and (3) are not appropriate for calling crisis lines relating to such matters as rape, domestic violence, child abuse, and drugs where confidentiality is a concern. The Department believes that it is more appropriate for the Federal Communications Commission to address these issues in its rulemaking under title IV.

A public accommodation is, however, required to make a TDD available to an individual with impaired hearing or speech, if it customarily offers telephone service to its customers, clients, patients, or participants on more than an incidental convenience basis. Where entry to a place of public accommodation requires use of a security entrance telephone, a TDD or other effective means of communication must be provided for use by an individual with impaired hearing or speech.

In other words, individual retail stores, doctors' offices, restaurants, or similar establishments are not required by this section to have TDD's, because TDD users will be able to make inquiries, appointments, or reservations with such establishments through the relay system established under title IV of the ADA. The public accommodation will likewise be able to contact TDD users through the relay system. On the other hand, hotels, hospitals, and other similar establishments that offer nondisabled individuals the opportunity to make outgoing telephone calls on more than an incidental convenience basis must provide a TDD on request.

Section 36.303(e) requires places of lodging that provide televisions in five or more guest rooms and hospitals to provide, upon request, a means for decoding closed captions for use by an individual with impaired hearing. Hotels should also provide a TDD or similar device at the front desk in order to take calls from guests who use TDD's in their rooms. In this way guests with hearing impairments can avail themselves of such hotel services as making inquiries of the front desk and ordering room service. The term ''hospital'' is used in its general sense and should be interpreted broadly.

Movie theaters are not required by §36.303 to present open-captioned films. However, other public accommodations that impart verbal information through soundtracks on

films, video tapes, or slide shows are required to make such information accessible to persons with hearing impairments. Captioning is one means to make the information accessible to individuals with disabilities.

The rule specifies that auxiliary aids and services include the acquisition or modification of equipment or devices. For example, tape players used for an audio-guided tour of a museum exhibit may require the addition of Brailled adhesive labels to the buttons on a reasonable number of the tape players to facilitate their use by individuals who are blind. Similarly, a hotel conference center may need to provide permanent or portable assistive listening systems for persons with hearing impairments.

As provided in §36.303(f), a public accommodation is not required to provide any particular aid or service that would result either in a fundamental alteration in the nature of the goods, services, facilities, privileges, advantages, or accommodations offered or in an undue burden. Both of these statutory limitations are derived from existing regulations and caselaw under section 504 and are to be applied on a case-by-case basis (see, e.g., 28 CFR 39.160(d) and *Southeastern Community College* v. *Davis,* 442 U.S. 397 (1979)). Congress intended that ''undue burden'' under §36.303 and ''undue hardship,'' which is used in the employment provisions of title I of the ADA, should be determined on a case-by-case basis under the same standards and in light of the same factors (Judiciary report at 59). The rule, therefore, in accordance with the definition of undue hardship in section 101(10) of the ADA, defines undue burden as ''significant difficulty or expense'' (see §§36.104 and 36.303(a)) and requires that undue burden be determined in light of the factors listed in the definition in 36.104.

Consistent with regulations implementing section 504 in federally conducted programs (see, e.g., 28 CFR 39.160(d)), §36.303(f) provides that the fact that the provision of a particular auxiliary aid or service would result in an undue burden does not relieve a public accommodation from the duty to furnish an alternative auxiliary aid or service, if available, that would not result in such a burden.

Section 36.303(g) of the proposed rule has been deleted from this section and included in a new §36.306. That new section continues to make clear that the auxiliary aids requirement does not mandate the provision of individually prescribed devices, such as prescription eyeglasses or hearing aids.

The costs of compliance with the requirements of this section may not be financed by surcharges limited to particular individuals with disabilities or any group of individuals with disabilities (§36.301(c)).

Section 36.304 Removal of Barriers

Section 36.304 requires the removal of architectural barriers and communication barriers that are structural in nature in existing facilities, where such removal is readily achievable, i.e., easily accomplishable and able to be carried out without much difficulty or expense. This requirement is based on section 302(b)(2)(A)(iv) of the ADA.

A number of commenters interpreted the phrase ''communication barriers that are structural in nature'' broadly to encompass the provision of communications devices such as TDD's, telephone handset amplifiers, assistive listening devices, and digital check-out displays. The statute, however, as read by the Department, limits the application of the phrase ''communications barriers that are structural in nature'' to those barriers that are an integral part of the physical structure of a facility. In addition to the communications barriers posed by permanent signage and alarm systems noted by Congress (see Education and Labor report at 110), the Department would also include among the communications barriers covered by §36.304 the failure to provide adequate sound buffers, and the presence of physical partitions that hamper the passage of sound waves between employees and customers. Given that §36.304's proper focus is on the removal of physical barriers, the Department believes that the obligation to provide communications equipment and devices such as TDD's, telephone handset amplifiers, assistive listening devices, and digital check-out displays is more appropriately determined by the requirements for auxiliary aids and services under §36.303 (see Education and Labor report at 107–108). The obligation to remove communications barriers that are structural in nature under §36.304, of course, is independent of any obligation to provide auxiliary aids and services under §36.303.

The statutory provision also requires the readily achievable removal of certain barriers in existing vehicles and rail passenger cars. This transportation requirement is not included in §36.304, but rather in §36.310(b) of the rule.

In striking a balance between guaranteeing access to individuals with disabilities and recognizing the legitimate cost concerns of businesses and other private entities, the ADA establishes different standards for existing facilities and new construction. In existing facilities, which are the subject of §36.304, where retrofitting may prove costly, a less rigorous degree of accessibility is required than in the case of new construction and alterations (see §§36.401–36.406) where accessibility can be more conveniently and economically incorporated in the initial stages of design and construction.

For example, a bank with existing automatic teller machines (ATM's) would have to

remove barriers to the use of the ATM's, if it is readily achievable to do so. Whether or not it is necessary to take actions such as ramping a few steps or raising or lowering an ATM would be determined by whether the actions can be accomplished easily and without much difficulty or expense.

On the other hand, a newly constructed bank with ATM's would be required by §36.401 to have an ATM that is ''readily accessible to and usable by'' persons with disabilities in accordance with accessibility guidelines incorporated under §36.406.

The requirement to remove architectural barriers includes the removal of physical barriers of any kind. For example, §36.304 requires the removal, when readily achievable, of barriers caused by the location of temporary or movable structures, such as furniture, equipment, and display racks. In order to provide access to individuals who use wheelchairs, for example, restaurants may need to rearrange tables and chairs, and department stores may need to reconfigure display racks and shelves. As stated in §36.304(f), such actions are not readily achievable to the extent that they would result in a significant loss of selling or serving space. If the widening of all aisles in selling or serving areas is not readily achievable, then selected widening should be undertaken to maximize the amount of merchandise or the number of tables accessible to individuals who use wheelchairs. Access to goods and services provided in any remaining inaccessible areas must be made available through alternative methods to barrier removal, as required by §36.305.

Because the purpose of title III of the ADA is to ensure that public accommodations are accessible to their customers, clients, or patrons (as opposed to their employees, who are the focus of title I), the obligation to remove barriers under §36.304 does not extend to areas of a facility that are used exclusively as employee work areas.

Section 36.304(b) provides a wide-ranging list of the types of modest measures that may be taken to remove barriers and that are likely to be readily achievable. The list includes examples of measures, such as adding raised letter markings on elevator control buttons and installing flashing alarm lights, that would be used to remove communications barriers that are structural in nature. It is not an exhaustive list, but merely an illustrative one. Moreover, the inclusion of a measure on this list does not mean that it is readily achievable in all cases. Whether or not any of these measures is readily achievable is to be determined on a case-by-case basis in light of the particular circumstances presented and the factors listed in the definition of readily achievable (§36.104).

A public accommodation generally would not be required to remove a barrier to physical access posed by a flight of steps, if removal would require extensive ramping or an elevator. Ramping a single step, however, will likely be readily achievable, and ramping several steps will in many circumstances also be readily achievable. The readily achievable standard does not require barrier removal that requires extensive restructuring or burdensome expense. Thus, where it is not readily achievable to do, the ADA would not require a restaurant to provide access to a restroom reachable only by a flight of stairs.

Like §36.405, this section permits deference to the national interest in preserving significant historic structures. Barrier removal would not be considered ''readily achievable'' if it would threaten or destroy the historic significance of a building or facility that is eligible for listing in the National Register of Historic Places under the National Historic Preservation Act (16 U.S.C. 470, *et seq.*), or is designated as historic under State or local law.

The readily achievable defense requires a less demanding level of exertion by a public accommodation than does the undue burden defense to the auxiliary aids requirements of §36.303. In that sense, it can be characterized as a ''lower'' standard than the undue burden standard. The readily achievable defense is also less demanding than the undue hardship defense in section 102(b)(5) of the ADA, which limits the obligation to make reasonable accommodation in employment. Barrier removal measures that are not easily accomplishable and are not able to be carried out without much difficulty or expense are not required under the readily achievable standard, even if they do not impose an undue burden or an undue hardship.

Section 36.304(f)(1) of the proposed rule, which stated that ''barrier removal is not readily achievable if it would result in significant loss of profit or significant loss of efficiency of operation,'' has been deleted from the final rule. Many commenters objected to this provision because it impermissibly introduced the notion of profit into a statutory standard that did not include it. Concern was expressed that, in order for an action not to be considered readily achievable, a public accommodation would inappropriately have to show, for example, not only that the action could not be done without ''much difficulty or expense'', but that a significant loss of profit would result as well. In addition, some commenters asserted use of the word ''significant,'' which is used in the definition of undue hardship under title I (the standard for interpreting the meaning of undue burden as a defense to title III's auxiliary aids requirements) (see §§36.104, 36.303(f)), blurs the fact that the readily achievable standard requires a lower

level of effort on the part of a public accommodation than does the undue burden standard.

The obligation to engage in readily achievable barrier removal is a continuing one. Over time, barrier removal that initially was not readily achievable may later be required because of changed circumstances. Many commenters expressed support for the Department's position that the obligation to comply with §36.304 is continuing in nature. Some urged that the rule require public accommodations to assess their compliance on at least an annual basis in light of changes in resources and other factors that would be relevant to determining what barrier removal measures would be readily achievable.

Although the obligation to engage in readily achievable barrier removal is clearly a continuing duty, the Department has declined to establish any independent requirement for an annual assessment or self-evaluation. It is best left to the public accommodations subject to §36.304 to establish policies to assess compliance that are appropriate to the particular circumstances faced by the wide range of public accommodations covered by the ADA. However, even in the absence of an explicit regulatory requirement for periodic self-evaluations, the Department still urges public accommodations to establish procedures for an ongoing assessment of their compliance with the ADA's barrier removal requirements. The Department recommends that this process include appropriate consultation with individuals with disabilities or organizations representing them. A serious effort at self-assessment and consultation can diminish the threat of litigation and save resources by identifying the most efficient means of providing required access.

The Department has been asked for guidance on the best means for public accommodations to comply voluntarily with this section. Such information is more appropriately part of the Department's technical assistance effort and will be forthcoming over the next several months. The Department recommends, however, the development of an implementation plan designed to achieve compliance with the ADA's barrier removal requirements before they become effective on January 26, 1992. Such a plan, if appropriately designed and diligently executed, could serve as evidence of a good faith effort to comply with the requirements of §36.104. In developing an implementation plan for readily achievable barrier removal, a public accommodation should consult with local organizations representing persons with disabilities and solicit their suggestions for cost-effective means of making individual places of public accommodation accessible. Such organizations may also be helpful in allocating scarce resources and establishing priorities. Local associations of businesses may want to encourage this process and serve as the forum for discussions on the local level between disability rights organizations and local businesses.

Section 36.304(c) recommends priorities for public accommodations in removing barriers in existing facilities. Because the resources available for barrier removal may not be adequate to remove all existing barriers at any given time, §36.304(c) suggests priorities for determining which types of barriers should be mitigated or eliminated first. The purpose of these priorities is to facilitate long-term business planning and to maximize, in light of limited resources, the degree of effective access that will result from any given level of expenditure.

Although many commenters expressed support for the concept of establishing priorities, a significant number objected to their mandatory nature in the proposed rule. The Department shares the concern of these commenters that mandatory priorities would increase the likelihood of litigation and inappropriately reduce the discretion of public accommodations to determine the most effective mix of barrier removal measures to undertake in particular circumstances. Therefore, in the final rule the priorities are no longer mandatory.

In response to comments that the priorities failed to address communications issues, the Department wishes to emphasize that the priorities encompass the removal of communications barriers that are structural in nature. It would be counter to the ADA's carefully wrought statutory scheme to include in this provision the wide range of communication devices that are required by the ADA's provisions on auxiliary aids and services. The final rule explicitly includes Brailled and raised letter signage and visual alarms among the examples of steps to remove barriers provided in §36.304(c)(2).

Section 36.304(c)(1) places the highest priority on measures that will enable individuals with disabilities to physically enter a place of public accommodation. This priority on ''getting through the door'' recognizes that providing actual physical access to a facility from public sidewalks, public transportation, or parking is generally preferable to any alternative arrangements in terms of both business efficiency and the dignity of individuals with disabilities.

The next priority, which is established in §36.304(c)(2), is for measures that provide access to those areas of a place of public accommodation where goods and services are made available to the public. For example, in a hardware store, to the extent that it is readily achievable to do so, individuals with disabilities should be given access not only to assistance at the front desk, but also access, like that available to other customers, to the retail display areas of the store.

The Department agrees with those commenters who argued that access to the areas where goods and services are provided is generally more important than the provision of restrooms. Therefore, the final rule reverses priorities two and three of the proposed rule in order to give lower priority to accessible restrooms. Consequently, the third priority in the final rule (§36.304(c)(3)) is for measures to provide access to restroom facilities and the last priority is placed on any remaining measures required to remove barriers.

Section 36.304(d) requires that measures taken to remove barriers under §36.304 be subject to subpart D's requirements for alterations (except for the path of travel requirements in §36.403). It only permits deviations from the subpart D requirements when compliance with those requirements is not readily achievable. In such cases, §36.304(d) permits measures to be taken that do not fully comply with the subpart D requirements, so long as the measures do not pose a significant risk to the health or safety of individuals with disabilities or others.

This approach represents a change from the proposed rule which stated that ''readily achievable'' measures taken solely to remove barriers under §36.304 are exempt from the alterations requirements of subpart D. The intent of the proposed rule was to maximize the flexibility of public accommodations in undertaking barrier removal by allowing deviations from the technical standards of subpart D. It was thought that allowing slight deviations would provide access and release additional resources for expanding the amount of barrier removal that could be obtained under the readily achievable standard.

Many commenters, however, representing both businesses and individuals with disabilities, questioned this approach because of the likelihood that unsafe or ineffective measures would be taken in the absence of the subpart D standards for alterations as a reference point. Some advocated a rule requiring strict compliance with the subpart D standard.

The Department in the final rule has adopted the view of many commenters that (1) public accommodations should in the first instance be required to comply with the subpart D standards for alterations where it is readily achievable to do so and (2) safe, readily achievable measures must be taken when compliance with the subpart D standards is not readily achievable. Reference to the subpart D standards in this manner will promote certainty and good design at the same time that permitting slight deviations will expand the amount of barrier removal that may be achieved under §36.304.

Because of the inconvenience to individuals with disabilities and the safety problems involved in the use of portable ramps, §36.304(e) permits the use of a portable ramp to comply with §36.304(a) only when installation of a permanent ramp is not readily achievable. In order to promote safety, §36.304(e) requires that due consideration be given to the incorporation of features such as nonslip surfaces, railings, anchoring, and strength of materials in any portable ramp that is used.

Temporary facilities brought in for use at the site of a natural disaster are subject to the barrier removal requirements of §36.304.

A number of commenters requested clarification regarding how to determine when a public accommodation has discharged its obligation to remove barriers in existing facilities. For example, is a hotel required by §36.304 to remove barriers in all of its guest rooms? Or is some lesser percentage adequate? A new paragraph (g) has been added to §36.304 to address this issue. The Department believes that the degree of barrier removal required under §36.304 may be less, but certainly would not be required to exceed, the standards for alterations under the ADA Accessibility Guidelines incorporated by subpart D of this part (ADAAG). The ADA's requirements for readily achievable barrier removal in existing facilities are intended to be substantially less rigorous than those for new construction and alterations. It, therefore, would be obviously inappropriate to require actions under §36.304 that would exceed the ADAAG requirements. Hotels, then, in order to satisfy the requirements of §36.304, would not be required to remove barriers in a higher percentage of rooms than required by ADAAG. If relevant standards for alterations are not provided in ADAAG, then reference should be made to the standards for new construction.

Section 36.305 Alternatives to Barrier Removal

Section 36.305 specifies that where a public accommodation can demonstrate that removal of a barrier is not readily achievable, the public accommodation must make its goods, services, facilities, privileges, advantages, or accommodations available through alternative methods, if such methods are readily achievable. This requirement is based on section 302(b)(2)(A)(v) of the ADA.

For example, if it is not readily achievable for a retail store to raise, lower, or remove shelves or to rearrange display racks to provide accessible aisles, the store must, if readily achievable, provide a clerk or take other alternative measures to retrieve inaccessible merchandise. Similarly, if it is not readily achievable to ramp a long flight of stairs leading to the front door of a restaurant or a pharmacy, the restaurant or the pharmacy must take alternative measures, if readily achievable, such as providing curb service or home delivery. If, within a restaurant, it is not readily achievable to remove physical barriers to a certain section of a restaurant, the restaurant must, where it is readily

achievable to do so, offer the same menu in an accessible area of the restaurant.

Where alternative methods are used to provide access, a public accommodation may not charge an individual with a disability for the costs associated with the alternative method (see §36.301(c)). Further analysis of the issue of charging for alternative measures may be found in the preamble discussion of §36.301(c).

In some circumstances, because of security considerations, some alternative methods may not be readily achievable. The rule does not require a cashier to leave his or her post to retrieve items for individuals with disabilities, if there are no other employees on duty.

Section 36.305(c) of the proposed rule has been deleted and the requirements have been included in a new §36.306. That section makes clear that the alternative methods requirement does not mandate the provision of personal devices, such as wheelchairs, or services of a personal nature.

In the final rule, §36.305(c) provides specific requirements regarding alternatives to barrier removal in multiscreen cinemas. In some situations, it may not be readily achievable to remove enough barriers to provide access to all of the theaters of a multiscreen cinema. If that is the case, §36.305(c) requires the cinema to establish a film rotation schedule that provides reasonable access for individuals who use wheelchairs to films being presented by the cinema. It further requires that reasonable notice be provided to the public as to the location and time of accessible showings. Methods for providing notice include appropriate use of the international accessibility symbol in a cinema's print advertising and the addition of accessibility information to a cinema's recorded telephone information line.

Section 36.306 Personal Devices and Services

The final rule includes a new §36.306, entitled ''Personal devices and services.'' Section 36.306 of the proposed rule, ''Readily achievable and undue burden: Factors to be considered,'' was deleted for the reasons described in the preamble discussion of the definition of the term ''readily achievable'' in §36.104. In place of §§36.303(g) and 36.305(c) of the proposed rule, which addressed the issue of personal devices and services in the contexts of auxiliary aids and alternatives to barrier removal, §36.306 provides a general statement that the regulation does not require the provision of personal devices and services. This section states that a public accommodation is not required to provide its customers, clients, or participants with personal devices, such as wheelchairs; individually prescribed devices, such as prescription eyeglasses or hearing aids; or services of a personal nature including assistance in eating, toileting, or dressing.

This statement serves as a limitation on all the requirements of the regulation. The personal devices and services limitation was intended to have general application in the proposed rule in all contexts where it was relevant. The final rule, therefore, clarifies, this point by including a general provision that will explicitly apply not just to auxiliary aids and services and alternatives to barrier removal, but across-the-board to include such relevant areas as modifications in policies, practices, and procedures (§36.302) and examinations and courses (§36.309), as well.

The Department wishes to clarify that measures taken as alternatives to barrier removal, such as retrieving items from shelves or providing curb service or home delivery, are not to be considered personal services. Similarly, minimal actions that may be required as modifications in policies, practices, or procedures under §36.302, such as a waiter's removing the cover from a customer's straw, a kitchen's cutting up food into smaller pieces, or a bank's filling out a deposit slip, are not services of a personal nature within the meaning of §36.306. (Of course, such modifications may be required under §36.302 only if they are ''reasonable.'') Similarly, this section does not preclude the short-term loan of personal receivers that are part of an assistive listening system.

Of course, if personal services are customarily provided to the customers or clients of a public accommodation, e.g., in a hospital or senior citizen center, then these personal services should also be provided to persons with disabilities using the public accommodation.

Section 36.307 Accessible or Special Goods.

Section 36.307 establishes that the rule does not require a public accommodation to alter its inventory to include accessible or special goods with accessibility features that are designed for, or facilitate use by, individuals with disabilities. As specified in §36.307(c), accessible or special goods include such items as Brailled versions of books, books on audio-cassettes, closed captioned video tapes, special sizes or lines of clothing, and special foods to meet particular dietary needs.

The purpose of the ADA's public accommodations requirements is to ensure accessibility to the goods offered by a public accommodation, not to alter the nature or mix of goods that the public accommodation has typically provided. In other words, a bookstore, for example, must make its facilities and sales operations accessible to individuals with disabilities, but is not required to stock Brailled or large print books. Similarly, a video store must make its facilities and rental operations accessible, but is not required to stock closed-captioned video tapes.

The Department has been made aware, however, that the most recent titles in videotape rental establishments are, in fact, closed captioned.

Although a public accommodation is not required by §36.307(a) to modify its inventory, it is required by §36.307(b), at the request of an individual with disabilities, to order accessible or special goods that it does not customarily maintain in stock if, in the normal course of its operation, it makes special orders for unstocked goods, and if the accessible or special goods can be obtained from a supplier with whom the public accommodation customarily does business. For example, a clothing store would be required to order specially-sized clothing at the request of an individual with a disability, if it customarily makes special orders for clothing that it does not keep in stock, and if the clothing can be obtained from one of the store's customary suppliers.

One commenter asserted that the proposed rule could be interpreted to require a store to special order accessible or special goods of all types, even if only one type is specially ordered in the normal course of its business. The Department, however, intends for §36.307(b) to require special orders only of those particular types of goods for which a public accommodation normally makes special orders. For example, a book and recording store would not have to specially order Brailled books if, in the normal course of its business, it only specially orders recordings and not books.

Section 36.308 Seating in Assembly Areas.

Section 36.308 establishes specific requirements for removing barriers to physical access in assembly areas, which include such facilities as theaters, concert halls, auditoriums, lecture halls, and conference rooms. This section does not address the provision of auxiliary aids or the removal of communications barriers that are structural in nature. These communications requirements are the focus of other provisions of the regulation (see §§36.303–36.304).

Individuals who use wheelchairs historically have been relegated to inferior seating in the back of assembly areas separate from accompanying family members and friends. The provisions of §36.308 are intended to promote integration and equality in seating.

In some instances it may not be readily achievable for auditoriums or theaters to remove seats to allow individuals with wheelchairs to sit next to accompanying family members or friends. In these situations, the final rule retains the requirement that the public accommodation provide portable chairs or other means to allow the accompanying individuals to sit with the persons in wheelchairs. Persons in wheelchairs should have the same opportunity to enjoy movies, plays, and similar events with their families and friends, just as other patrons do. The final rule specifies that portable chairs or other means to permit family members or companions to sit with individuals who use wheelchairs must be provided only when it is readily achievable to do so.

In order to facilitate seating of wheelchair users who wish to transfer to existing seating, paragraph (a)(1) of the final rule adds a requirement that, to the extent readily achievable, a reasonable number of seats with removable aisle-side armrests must be provided. Many persons in wheelchairs are able to transfer to existing seating with this relatively minor modification. This solution avoids the potential safety hazard created by the use of portable chairs and fosters integration. The final ADA Accessibility Guidelines incorporated by subpart D (ADAAG) also add a requirement regarding aisle seating that was not in the proposed guidelines. In situations when a person in a wheelchair transfers to existing seating, the public accommodation shall provide assistance in handling the wheelchair of the patron with the disability.

Likewise, consistent vith ADAAG, the final rule adds in §36.308(a)(1)(ii)(B) a requirement that, to the extent readily achievable, wheelchair seating provide lines of sight and choice of admission prices comparable to those for members of the general public.

Finally, because Congress intended that the requirements for barrier removal in existing facilities be substantially less rigorous than those required for new construction and alterations, the final rule clarifies in §36.308(a)(3) that in no event can the requirements for existing facilities be interpreted to exceed the standards for alterations under ADAAG. For example, §4.33 of ADAAG only requires wheelchair spaces to be provided in more than one location when the seating capacity of the assembly area exceeds 300. Therefore, paragraph (a) of §36.308 may not be interpreted to require readily achievable dispersal of wheelchair seating in assembly areas with 300 or fewer seats. Similarly, §4.1.3(19) of ADAAG requires six accessible wheelchair locations in an assembly area with 301 to 500 seats. The reasonable number of wheelchair locations required by paragraph (a), therefore, may be less than six, but may not be interpreted to exceed six.

Proposed Section 36.309 Purchase of Furniture and Equipment

Section 36.309 of the proposed rule would have required that newly purchased furniture or equipment made available for use at a place of public accommodation be accessible, to the extent such furniture or equipment is available, unless this requirement

would fundamentally alter the goods, services, facilities, privileges, advantages, or accommodations offered, or would not be readily achievable. Proposed §36.309 has been omitted from the final rule because the Department has determined that its requirements are more properly addressed under other sections, and because there are currently no appropriate accessibility standards addressing many types of furniture and equipment.

Some types of equipment will be required to meet the accessibility requirements of subpart D. For example, ADAAG establishes technical and scoping requirements in new construction and alterations for automated teller machines and telephones. Purchase or modification of equipment is required in certain instances by the provisions in §§36.201 and 36.202. For example, an arcade may need to provide accessible video machines in order to ensure full and equal enjoyment of the facilities and to provide an opportunity to participate in the services and facilities it provides. The barrier removal requirements of §36.304 will apply as well to furniture and equipment (lowering shelves, rearranging furniture, adding Braille labels to a vending machine).

Section 36.309 Examinations and Courses

Section 36.309(a) sets forth the general rule that any private entity that offers examinations or courses related to applications, licensing, certification, or credentialing for secondary or postsecondary education, professional, or trade purposes shall offer such examinations or courses in a place and manner accessible to persons with disabilities or offer alternative accessible arrangements for such individuals.

Paragraph (a) restates section 309 of the Americans with Disabilities Act. Section 309 is intended to fill the gap that is created when licensing, certification, and other testing authorities are not covered by section 504 of the Rehabilitation Act or title II of the ADA. Any such authority that is covered by section 504, because of the receipt of Federal money, or by title II, because it is a function of a State or local government, must make all of its programs accessible to persons with disabilities, which includes physical access as well as modifications in the way the test is administered, e.g., extended time, written instructions, or assistance of a reader.

Many licensing, certification, and testing authorities are not covered by section 504, because no Federal money is received; nor are they covered by title II of the ADA because they are not State or local agencies. However, States often require the licenses provided by such authorities in order for an individual to practice a particular profession or trade. Thus, the provision was included in the ADA in order to assure that persons with disabilities are not foreclosed from educational, professional, or trade opportunities because an examination or course is conducted in an inaccessible site or without needed modifications.

As indicated in the ''Application'' section of this part (§36.102), §36.309 applies to any private entity that offers the specified types of examinations or courses. This is consistent with section 309 of the Americans with Disabilities Act, which states that the requirements apply to ''any person'' offering examinations or courses.

The Department received a large number of comments on this section, reflecting the importance of ensuring that the key gateways to education and employment are open to individuals with disabilities. The most frequent comments were objections to the fundamental alteration and undue burden provisions in §§36.309 (b)(3) and (c)(3) and to allowing courses and examinations to be provided through alternative accessible arrangements, rather than in an integrated setting.

Although section 309 of the Act does not refer to a fundamental alteration or undue burden limitation, those limitations do appear in section 302(b)(2)(A)(iii) of the Act, which establishes the obligation of public accommodations to provide auxiliary aids and services. The Department, therefore, included it in the paragraphs of §36.309 requiring the provision of auxiliary aids. One commenter argued that similar limitations should apply to all of the requirements of §36.309, but the Department did not consider this extension appropriate.

Commenters who objected to permitting ''alternative accessible arrangements'' argued that such arrangements allow segregation and should not be permitted, unless they are the least restrictive available alternative, for example, for someone who cannot leave home. Some commenters made a distinction between courses, where interaction is an important part of the educational experience, and examinations, where it may be less important. Because the statute specifically authorizes alternative accessible arrangements as a method of meeting the requirements of section 309, the Department has not adopted this suggestion. The Department notes, however, that, while examinations of the type covered by §36.309 may not be covered elsewhere in the regulation, courses will generally be offered in a ''place of education,'' which is included in the definition of ''place of public accommodation'' in §36.104, and, therefore, will be subject to the integrated setting requirement of §36.203.

Section 36.309(b) sets forth specific requirements for examinations. Examinations covered by this section would include a bar exam or the Scholastic Aptitude Test prepared by the Educational Testing Service. Paragraph (b)(1) is adopted from the Department of Education's section 504 regulation

on admission tests to postsecondary educational programs (34 CFR 104.42(b)(3)). Paragraph (b)(1)(i) requires that a private entity offering an examination covered by the section must assure that the examination is selected and administered so as to best ensure that the examination accurately reflects an individual's aptitude or achievement level or other factor the examination purports to measure, rather than reflecting the individual's impaired sensory, manual, or speaking skills (except where those skills are the factors that the examination purports to measure).

Paragraph (b)(1)(ii) requires that any examination specially designed for individuals with disabilities be offered as often and in as timely a manner as other examinations. Some commenters noted that persons with disabilities may be required to travel long distances when the locations for examinations for individuals with disabilities are limited, for example, to only one city in a State instead of a variety of cities. The Department has therefore revised this paragraph to add a requirement that such examinations be offered at locations that are as convenient as the location of other examinations.

Commenters representing organizations that administer tests wanted to be able to require individuals with disabilities to provide advance notice and appropriate documentation, at the applicants' expense, of their disabilities and of any modifications or aids that would be required. The Department agrees that such requirements are permissible, provided that they are not unreasonable and that the deadline for such notice is no earlier than the deadline for others applying to take the examination. Requiring individuals with disabilities to file earlier applications would violate the requirement that examinations designed for individuals with disabilities be offered in as timely a manner as other examinations.

Examiners may require evidence that an applicant is entitled to modifications or aids as required by this section, but requests for documentation must be reasonable and must be limited to the need for the modification or aid requested. Appropriate documentation might include a letter from a physician or other professional, or evidence of a prior diagnosis or accommodation, such as eligibility for a special education program. The applicant may be required to bear the cost of providing such documentation, but the entity administering the examination cannot charge the applicant for the cost of any modifications or auxiliary aids, such as interpreters, provided for the examination.

Paragraph (b)(1)(iii) requires that examinations be administered in facilities that are accessible to individuals with disabilities or alternative accessible arrangements are made.

Paragraph (b)(2) gives examples of modifications to examinations that may be necessary in order to comply with this section. These may include providing more time for completion of the examination or a change in the manner of giving the examination, e.g., reading the examination to the individual.

Paragraph (b)(3) requires the provision of auxiliary aids and services, unless the private entity offering the examination can demonstrate that offering a particular auxiliary aid would fundamentally alter the examination or result in an undue burden. Examples of auxiliary aids include taped examinations, interpreters or other effective methods of making aurally delivered materials available to individuals with hearing impairments, readers for individuals with visual impairments or learning disabilities, and other similar services and actions. The suggestion that individuals with learning disabilities may need readers is included, although it does not appear in the Department of Education regulation, because, in fact, some individuals with learning disabilities have visual perception problems and would benefit from a reader.

Many commenters pointed out the importance of ensuring that modifications provide the individual with a disability an equal opportunity to demonstrate his or her knowledge or ability. For example, a reader who is unskilled or lacks knowledge of specific terminology used in the examination may be unable to convey the information in the questions or to follow the applicant's instructions effectively. Commenters pointed out that, for persons with visual impairments who read Braille, Braille provides the closest functional equivalent to a printed test. The Department has, therefore, added Brailled examinations to the examples of auxiliary aids and services that may be required. For similar reasons, the Department also added to the list of examples of auxiliary aids and services large print examinations and answer sheets; ''qualified'' readers; and transcribers to write answers.

A commenter suggested that the phrase ''fundamentally alter the examination'' in this paragraph of the proposed rule be revised to more accurately reflect the function affected. In the final rule the Department has substituted the phrase ''fundamentally alter the measurement of the skills or knowledge the examination is intended to test.''

Paragraph (b)(4) gives examples of alternative accessible arrangements. For instance, the private entity might be required to provide the examination at an individual's home with a proctor. Alternative arrangements must provide conditions for individuals with disabilities that are comparable to the conditions under which other individuals take the examinations. In other words, an

examination cannot be offered to an individual with a disability in a cold, poorly lit basement, if other individuals are given the examination in a warm, well lit classroom.

Some commenters who provide examinations for licensing or certification for particular occupations or professions urged that they be permitted to refuse to provide modifications or aids for persons seeking to take the examinations if those individuals, because of their disabilities, would be unable to perform the essential functions of the profession or occupation for which the examination is given, or unless the disability is reasonably determined in advance as not being an obstacle to certification. The Department has not changed its rule based on this comment. An examination is one stage of a licensing or certification process. An individual should not be barred from attempting to pass that stage of the process merely because he or she might be unable to meet other requirements of the process. If the examination is not the first stage of the qualification process, an applicant may be required to complete the earlier stages prior to being admitted to the examination. On the other hand, the applicant may not be denied admission to the examination on the basis of doubts about his or her abilities to meet requirements that the examination is not designed to test.

Paragraph (c) sets forth specific requirements for courses. Paragraph (c)(1) contains the general rule that any course covered by this section must be modified to ensure that the place and manner in which the course is given is accessible. Paragraph (c)(2) gives examples of possible modifications that might be required, including extending the time permitted for completion of the course, permitting oral rather than written delivery of an assignment by a person with a visual impairment, or adapting the manner in which the course is conducted (i.e., providing cassettes of class handouts to an individual with a visual impairment). In response to comments, the Department has added to the examples in paragraph (c)(2) specific reference to distribution of course materials. If course materials are published and available from other sources, the entity offering the course may give advance notice of what materials will be used so as to allow an individual to obtain them in Braille or on tape but materials provided by the course offerer must be made available in alternative formats for individuals with disabilities.

In language similar to that of paragraph (b), paragraph (c)(3) requires auxiliary aids and services, unless a fundamental alteration or undue burden would result, and paragraph (c)(4) requires that courses be administered in accessible facilities. Paragraph (c)(5) gives examples of alternative accessible arrangements. These may include provision of the course through videotape, cassettes, or prepared notes. Alternative arrangements must provide comparable conditions to those provided to others, including similar lighting, room temperature, and the like. An entity offering a variety of courses, to fulfill continuing education requirements for a profession, for example, may not limit the selection or choice of courses available to individuals with disabilities.

Section 36.310 Transportation Provided by Public Accommodations

Section 36.310 contains specific provisions relating to public accommodations that provide transportation to their clients or customers. This section has been substantially revised in order to coordinate the requirements of this section with the requirements applicable to these transportation systems that will be contained in the regulations issued by the Secretary of Transportation pursuant to section 306 of the ADA, to be codified at 49 CFR part 37. The Department notes that, although the responsibility for issuing regulations applicable to transportation systems operated by public accommodations is divided between this Department and the Department of –Transportation, enforcement authority is assigned only to the Department of Justice.

The Department received relatively few comments on this section of the proposed rule. Most of the comments addressed issues that are not specifically addressed in this part, such as the standards for accessible vehicles and the procedure for determining whether equivalent service is provided. Those standards will be contained in the regulation issued by the Department of Transportation. Other commenters raised questions about the types of transportation that will be subject to this section. In response to these inquiries, the Department has revised the list of examples contained in the regulation.

Paragraph (a)(1) states the general rule that covered public accommodations are subject to all of the specific provisions of subparts B, C, and D, except as provided in §36.310. Examples of operations covered by the requirements are listed in paragraph (a)(2). The stated examples include hotel and motel airport shuttle services, customer shuttle bus services operated by private companies and shopping centers, student transportation, and shuttle operations of recreational facilities such as stadiums, zoos, amusement parks, and ski resorts. This brief list is not exhaustive. The section applies to any fixed route or demand responsive transportation system operated by a public accommodation for the benefit of its clients or customers. The section does not apply to transportation services provided only to employees. Employee transportation will be subject to the regulations issued by the

Equal Employment Opportunity Commission to implement title I of the Act. However, if employees and customers or clients are served by the same transportation system, the provisions of this section will apply.

Paragraph (b) specifically provides that a public accommodation shall remove transportation barriers in existing vehicles to the extent that it is readily achievable to do so, but that the installation of hydraulic or other lifts is not required.

Paragraph (c) provides that public accommodations subject to this section shall comply with the requirements for transportation vehicles and systems contained in the regulations issued by the Secretary of Transportation.

Subpart D—New Construction and Alterations

Subpart D implements section 303 of the Act, which requires that newly constructed or altered places of public accommodation or commercial facilities be readily accessible to and usable by individuals with disabilities. This requirement contemplates a high degree of convenient access. It is intended to ensure that patrons and employees of places of public accommodation and employees of commercial facilities are able to get to, enter, and use the facility.

Potential patrons of places of public accommodation, such as retail establishments, should be able to get to a store, get into the store, and get to the areas where goods are being provided. Employees should have the same types of access, although those individuals require access to and around the employment area as well as to the area in which goods and services are provided.

The ADA is geared to the future—its goal being that, over time, access will be the rule, rather than the exception. Thus, the Act only requires modest expenditures, of the type addressed in §36.304 of this part, to provide access to existing facilities not otherwise being altered, but requires all new construction and alterations to be accessible.

The Act does not require new construction or alterations; it simply requires that, when a public accommodation or other private entity undertakes the construction or alteration of a facility subject to the Act, the newly constructed or altered facility must be made accessible. This subpart establishes the requirements for new construction and alterations.

As explained under the discussion of the definition of ''facility,'' §36.104, pending development of specific requirements, the Department will not apply this subpart to places of public accommodation located in mobile units, boats, or other conveyances.

Section 36.401 New Construction

General

Section 36.401 implements the new construction requirements of the ADA. Section 303 (a)(1) of the Act provides that discrimination for purposes of section 302(a) of the Act includes a failure to design and construct facilities for first occupancy later than 30 months after the date of enactment (i.e., after January 26, 1993) that are readily accessible to and usable by individuals with disabilities.

Paragraph 36.401(a)(1) restates the general requirement for accessible new construction. The proposed rule stated that ''any public accommodation or other private entity responsible for design and construction'' must ensure that facilities conform to this requirement. Various commenters suggested that the proposed language was not consistent with the statute because it substituted ''private entity responsible for design and construction'' for the statutory language; because it did not address liability on the part of architects, contractors, developers, tenants, owners, and other entities; and because it limited the liability of entities responsible for commercial facilities. In response, the Department has revised this paragraph to repeat the language of section 303(a) of the ADA. The Department will interpret this section in a manner consistent with the intent of the statute and with the nature of the responsibilities of the various entities for design, for construction, or for both.

Designed and Constructed for First Occupancy

According to paragraph (a)(2), a facility is subject to the new construction requirements only if a completed application for a building permit or permit extension is filed after January 26, 1992, and the facility is occupied after January 26, 1993.

The proposed rule set forth for comment two alternative ways by which to determine what facilities are subject to the Act and what standards apply. Paragraph (a)(2) of the final rule is a slight variation on Option One in the proposed rule. The reasons for the Department's choice of Option One are discussed later in this section.

Paragraph (a)(2) acknowledges that Congress did not contemplate having actual occupancy be the sole trigger for the accessibility requirements, because the statute prohibits a failure to ''design and construct for first occupancy,'' rather than requiring accessibility in facilities actually occupied after a particular date.

The commenters overwhelmingly agreed with the Department's proposal to use a date certain; many cited the reasons given in the preamble to the proposed rule. First, it is

helpful for designers and builders to have a fixed date for accessible design, so that they can determine accessibility requirements early in the planning and design stage. It is difficult to determine accessibility requirements in anticipation of the actual date of first occupancy because of unpredictable and uncontrollable events (e.g., strikes affecting suppliers or labor, or natural disasters) that may delay occupancy. To redesign or reconstruct portions of a facility if it begins to appear that occupancy will be later than anticipated would be quite costly. A fixed date also assists those responsible for enforcing, or monitoring compliance with, the statute, and those protected by it.

The Department considered using as a trigger date for application of the accessibility standards the date on which a permit is granted. The Department chose instead the date on which a complete permit application is certified as received by the appropriate government entity. Almost all commenters agreed with this choice of a trigger date. This decision is based partly on information that several months or even years can pass between application for a permit and receipt of a permit. Design is virtually complete at the time an application is complete (i.e., certified to contain all the information required by the State, county, or local government). After an application is filed, delays may occur before the permit is granted due to numerous factors (not necessarily relating to accessibility): for example, hazardous waste discovered on the property, flood plain requirements, zoning disputes, or opposition to the project from various groups. These factors should not require redesign for accessibility if the application was completed before January 26, 1992. However, if the facility must be redesigned for other reasons, such as a change in density or environmental preservation, and the final permit is based on a new application, the rule would require accessibility if that application was certified complete after January 26, 1992.

The certification of receipt of a complete application for a building permit is an appropriate point in the process because certifications are issued in writing by governmental authorities. In addition, this approach presents a clear and objective standard.

However, a few commenters pointed out that in some jurisdictions it is not possible to receive a ''certification'' that an application is complete, and suggested that in those cases the fixed date should be the date on which an application for a permit is received by the government agency. The Department has included such a provision in §36.401(a)(2)(i).

The date of January 26, 1992, is relevant only with respect to the last application for a permit or permit extension for a facility. Thus, if an entity has applied for only a ''foundation'' permit, the date of that permit application has no effect, because the entity must also apply for and receive a permit at a later date for the actual superstructure. In this case, it is the date of the later application that would control, unless construction is not completed within the time allowed by the permit, in which case a third permit would be issued and the date of the application for that permit would be determinative for purposes of the rule.

Choice of Option One for Defining ''Designed and Constructed for First Occupancy''

Under the option the Department has chosen for determining applicability of the new construction standards, a building would be considered to be ''for first occupancy'' after January 26, 1993, only (1) if the last application for a building permit or permit extension for the facility is certified to be complete (or, in some jurisdictions, received) by a State, county, or local government after January 26, 1992, and (2) if the first certificate of occupancy is issued after January 26, 1993. The Department also asked for comment on an Option Two, which would have imposed new construction requirements if a completed application for a building permit or permit extension was filed after the enactment of the ADA (July 26, 1990), and the facility was occupied after January 26, 1993.

The request for comment on this issue drew a large number of comments expressing a wide range of views. Most business groups and some disability rights groups favored Option One, and some business groups and most disability rights groups favored Option Two. Individuals and government entities were equally divided; several commenters proposed other options.

Those favoring Option One pointed out that it is more reasonable in that it allows time for those subject to the new construction requirements to anticipate those requirements and to receive technical assistance pursuant to the Act. Numerous commenters said that time frames for designing and constructing some types of facilities (for example, health care facilities) can range from two to four years or more. They expressed concerns that Option Two, which would apply to some facilities already under design or construction as of the date the Act was signed, and to some on which construction began shortly after enactment, could result in costly redesign or reconstruction of those facilities. In the same vein, some Option One supporters found Option Two objectionable on due process grounds. In their view, Option Two would mean that in July 1991 (upon issuance of the final DOJ rule) the responsible entities would learn that ADA standards had been in effect since July 26, 1990, and this would amount to retroactive

application of standards. Numerous commenters characterized Option Two as having no support in the statute and Option One as being more consistent with congressional intent.

Those who favored Option Two pointed out that it would include more facilities within the coverage of the new construction standards. They argued that because similar accessibility requirements are in effect under State laws, no hardship would be imposed by this option. Numerous commenters said that hardship would also be eliminated in light of their view that the ADA requires compliance with the Uniform Federal Accessibility Standards (UFAS) until issuance of DOJ standards. Those supporting Option Two claimed that it was more consistent with the statute and its legislative history.

The Department has chosen Option One rather than Option Two, primarily on the basis of the language of three relevant sections of the statute. First, section 303(a) requires compliance with accessibility standards set forth, or incorporated by reference in, regulations to be issued by the Department of Justice. Standing alone, this section cannot be read to require compliance with the Department's standards before those standards are issued (through this rulemaking). Second, according to section 310 of the statute, section 303 becomes effective on January 26, 1992. Thus, section 303 cannot impose requirements on the design of buildings before that date. Third, while section 306(d) of the Act requires compliance with UFAS if final regulations have not been issued, that provision cannot reasonably be read to take effect until July 26, 1991, the date by which the Department of Justice must issue final regulations under title III.

Option Two was based on the premise that the interim standards in section 306(d) take effect as of the ADA's enactment (July 26, 1990), rather than on the date by which the Department of Justice regulations are due to be issued (July 26, 1991). The initial clause of section 306(d)(1) itself is silent on this question:

If final regulations have not been issued pursuant to this section, for new construction for which a * * * building permit is obtained prior to the issuance of final regulations * * * (interim standards apply).

The approach in Option Two relies partly on the language of section 310 of the Act, which provides that section 306, the interim standards provision, takes effect on the date of enactment. Under this interpretation the interim standards provision would prevail over the operative provision, section 303, which requires that new construction be accessible and which becomes effective January 26, 1992. This approach would also require construing the language of section 306(d)(1) to take effect before the Department's standards are due to be issued. The preferred reading of section 306 is that it would require that, if the Department's final standards had not been issued by July 26, 1991, UFAS would apply to certain buildings until such time as the Department's standards were issued.

General Substantive Requirements of the New Construction Provisions

The rule requires, as does the statute, that covered newly constructed facilities be readily accessible to and usable by individuals with disabilities. The phrase ''readily accessible to and usable by individuals with disabilities'' is a term that, in slightly varied formulations, has been used in the Architectural Barriers Act of 1968, the Fair Housing Act, the regulations implementing section 504 of the Rehabilitation Act of 1973, and current accessibility standards. It means, with respect to a facility or a portion of a facility, that it can be approached, entered, and used by individuals with disabilities (including mobility, sensory, and cognitive impairments) easily and conveniently. A facility that is constructed to meet the requirements of the rule's accessibility standards will be considered readily accessible and usable with respect to construction. To the extent that a particular type or element of a facility is not specifically addressed by the standards, the language of this section is the safest guide.

A private entity that renders an ''accessible'' building inaccessible in its operation, through policies or practices, may be in violation of section 302 of the Act. For example, a private entity can render an entrance to a facility inaccessible by keeping an accessible entrance open only during certain hours (whereas the facility is available to others for a greater length of time). A facility could similarly be rendered inaccessible if a person with disabilities is significantly limited in her or his choice of a range of accommodations.

Ensuring access to a newly constructed facility will include providing access to the facility from the street or parking lot, to the extent the responsible entity has control over the route from those locations. In some cases, the private entity will have no control over access at the point where streets, curbs, or sidewalks already exist, and in those instances the entity is encouraged to request modifications to a sidewalk, including installation of curb cuts, from a public entity responsible for them. However, as some commenters pointed out, there is no obligation for a private entity subject to title III of the ADA to seek or ensure compliance by a public entity with title II. Thus, although a locality may have an obligation under title II of the Act to install curb cuts at a particular location, that responsibility is separate from the private entity's title III obligation, and

any involvement by a private entity in seeking cooperation from a public entity is purely voluntary in this context.

Work Areas

Proposed paragraph 36.401(b) addressed access to employment areas, rather than to the areas where goods or services are being provided. The preamble noted that the proposed paragraph provided guidance for new construction and alterations until more specific guidance was issued by the ATBCB and reflected in this Department's regulation. The entire paragraph has been deleted from this section in the final rule. The concepts of paragraphs (b) (1), (2), and (5) of the proposed rule are included, with modifications and expansion, in ADAAG. Paragraphs (3) and (4) of the proposed rule, concerning fixtures and equipment, are not included in the rule or in ADAAG.

Some commenters asserted that questions relating to new construction and alterations of work areas should be addressed by the EEOC under title I, as employment concerns. However, the legislative history of the statute clearly indicates that the new construction and alterations requirements of title III were intended to ensure accessibility of new facilities to all individuals, including employees. The language of section 303 sweeps broadly in its application to all public accommodations and commercial facilities. EEOC's title I regulations will address accessibility requirements that come into play when ''reasonable accommodation'' to individual employees or applicants with disabilities is mandated under title I.

The issues dealt with in proposed §36.401(b) (1) and (2) are now addressed in ADAAG section 4.1.1(3). The Department's proposed paragraphs would have required that areas that will be used only by employees as work stations be constructed so that individuals with disabilities could approach, enter, and exit the areas. They would not have required that all individual work stations be constructed or equipped (for example, with shelves that are accessible or adaptable) to be accessible. This approach was based on the theory that, as long as an employee with disabilities could enter the building and get to and around the employment area, modifications in a particular work station could be instituted as a ''reasonable accommodation'' to that employee if the modifications were necessary and they did not constitute an undue hardship.

Almost all of the commenters agreed with the proposal to require access to a work area but not to require accessibility of each individual work station. This principle is included in ADAAG 4.1.1(3). Several of the comments related to the requirements of the proposed ADAAG and have been addressed in the accessibility standards.

Proposed paragraphs (b) (3) and (4) would have required that consideration be given to placing fixtures and equipment at accessible heights in the first instance, and to purchasing new equipment and fixtures that are adjustable. These paragraphs have not been included in the final rule because the rule in most instances does not establish accessibility standards for purchased equipment. (See discussion elsewhere in the preamble of proposed §36.309.) While the Department encourages entities to consider providing accessible or adjustable fixtures and equipment for employees, this rule does not require them to do so.

Paragraph (b)(5) of proposed §36.401 clarified that proposed paragraph (b) did not limit the requirement that employee areas other than individual work stations must be accessible. For example, areas that are employee ''common use'' areas and are not solely used as work stations (e.g., employee lounges, cafeterias, health units, exercise facilities) are treated no differently under this regulation than other parts of a building; they must be constructed or altered in compliance with the accessibility standards. This principle is not stated in §36.401 but is implicit in the requirements of this section and ADAAG.

Commercial Facilities in Private Residences

Section 36.401(b) of the final rule is a new provision relating to commercial facilities located in private residences. The proposed rule addressed these requirements in the preamble to §36.207, ''Places of public accommodation located in private residences.'' The preamble stated that the approach for commercial facilities would be the same as that for places of public accommodation, i.e., those portions used exclusively as a commercial facility or used as both a commercial facility and for residential purposes would be covered. Because commercial facilities are only subject to new construction and alterations requirements, however, the covered portions would only be subject to subpart D. This approach is reflected in §36.401(b)(1).

The Department is aware that the statutory definition of ''commercial facility'' excludes private residences because they are ''expressly exempted from coverage under the Fair Housing Act of 1968, as amended.'' However, the Department interprets that exemption as applying only to facilities that are exclusively residential. When a facility is used as both a residence and a commercial facility, the exemption does not apply.

Paragraph (b)(2) is similar to the new paragraph (b) under §36.207, ''Places of public accommodation located in private residences.'' The paragraph clarifies that the covered portion includes not only the space used as a commercial facility, but also the elements used to enter the commercial facility, e.g., the homeowner's front sidewalk, if any; the

doorway; the hallways; the restroom, if used by employees or visitors of the commercial facility; and any other portion of the residence, interior or exterior, used by employees or visitors of the commercial facility.

As in the case of public accommodations located in private residences, the new construction standards only apply to the extent that a portion of the residence is designed or intended for use as a commercial facility. Likewise, if a homeowner alters a portion of his home to convert it to a commercial facility, that work must be done in compliance with the alterations standards in appendix A.

Structural Impracticability

Proposed §36.401(c) is included in the final rule with minor changes. It details a statutory exception to the new construction requirement: the requirement that new construction be accessible does not apply where an entity can demonstrate that it is structurally impracticable to meet the requirements of the regulation. This provision is also included in ADAAG, at section 4.1.1(5)(a).

Consistent with the legislative history of the ADA, this narrow exception will apply only in rare and unusual circumstances where unique characteristics of terrain make accessibility unusually difficult. Such limitations for topographical problems are analogous to an acknowledged limitation in the application of the accessibility requirements of the Fair Housing Amendments Act (FHAA) of 1988.

Almost all commenters supported this interpretation. Two commenters argued that the DOJ requirement is too limiting and would not exempt some buildings that should be exempted because of soil conditions, terrain, and other unusual site conditions. These commenters suggested consistency with HUD's Fair Housing Accessibility Guidelines (56 FR 9472 (1991)), which generally would allow exceptions from accessibility requirements, or allow compliance with less stringent requirements, on sites with slopes exceeding 10%.

The Department is aware of the provisions in HUD's guidelines, which were issued on March 6, 1991, after passage of the ADA and publication of the Department's proposed rule. The approach taken in these guidelines, which apply to different types of construction and implement different statutory requirements for new construction, does not bind this Department in regulating under the ADA. The Department has included in the final rule the substance of the proposed provision, which is faithful to the intent of the statute, as expressed in the legislative history. (See Senate report at 70–71; Education and Labor report at 120.)

The limited structural impracticability exception means that it is acceptable to deviate from accessibility requirements only where unique characteristics of terrain prevent the incorporation of accessibility features and where providing accessibility would destroy the physical integrity of a facility. A situation in which a building must be built on stilts because of its location in marshlands or over water is an example of one of the few situations in which the exception for structural impracticability would apply.

This exception to accessibility requirements should not be applied to situations in which a facility is located in ''hilly'' terrain or on a plot of land upon which there are steep grades. In such circumstances, accessibility can be achieved without destroying the physical integrity of a structure, and is required in the construction of new facilities.

Some commenters asked for clarification concerning when and how to apply the ADA rules or the Fair Housing Accessibility Guidelines, especially when a facility may be subject to both because of mixed use. Guidance on this question is provided in the discussion of the definitions of place of public accommodation and commercial facility. With respect to the structural impracticability exception, a mixed-use facility could not take advantage of the Fair Housing exemption, to the extent that it is less stringent than the ADA exemption, except for those portions of the facility that are subject only to the Fair Housing Act.

As explained in the preamble to the proposed rule, in those rare circumstances in which it is structurally impracticable to achieve full compliance with accessibility retirements under the ADA, places of public accommodation and commercial facilities should still be designed and constructed to incorporate accessibility features to the extent that the features are structurally practicable. The accessibility requirements should not be viewed as an all-or-nothing proposition in such circumstances.

If it is structurally impracticable for a facility in its entirety to be readily accessible to and usable by people with disabilities, then those portions that can be made accessible should be made accessible. If a building cannot be constructed in compliance with the full range of accessibility requirements because of structural impracticability, then it should still incorporate those features that are structurally practicable. If it is structurally impracticable to make a particular facility accessible to persons who have particular types of disabilities, it is still appropriate to require it to be made accessible to persons with other types of disabilities. For example, a facility that is of necessity built on stilts and cannot be made accessible to persons who use wheelchairs because it is structurally impracticable to do so, must be made accessible for individuals

with vision or hearing impairments or other kinds of disabilities.

Elevator Exemption

Section 36.401(d) implements the ''elevator exemption'' for new construction in section 303(b) of the ADA. The elevator exemption is an exception to the general requirement that new facilities be readily accessible to and usable by individuals with disabilities. Generally, an elevator is the most common way to provide individuals who use wheelchairs ''ready access'' to floor levels above or below the ground floor of a multi-story building. Congress, however, chose not to require elevators in new small buildings, that is, those with less than three stories or less than 3,000 square feet per story. In buildings eligible for the exemption, therefore, ''ready access'' from the building entrance to a floor above or below the ground floor is not required, because the statute does not require that an elevator be installed in such buildings. The elevator exemption does not apply, however, to a facility housing a shopping center, a shopping mall, or the professional office of a health care provider, or other categories of facilities as determined by the Attorney General. For example, a new office building that will have only two stories, with no elevator planned, will not be required to have an elevator, even if each story has 20,000 square feet. In other words, having either less than 3000 square feet per story or less than three stories qualifies a facility for the exemption; it need not qualify for the exemption on both counts. Similarly, a facility that has five stories of 2800 square feet each qualifies for the exemption. If a facility has three or more stories at any point, it is not eligible for the elevator exemption unless all the stories are less than 3000 square feet.

The terms ''shopping center or shopping mall'' and ''professional office of a health care provider'' are defined in this section. They are substantively identical to the definitions included in the proposed rule in § 36.104, ''Definitions.'' They have been moved to this section because, as commenters pointed out, they are relevant only for the purposes of the elevator exemption, and inclusion in the general definitions section could give the incorrect impression that an office of a health care provider is not covered as a place of public accommodation under other sections of the rule, unless the office falls within the definition.

For purposes of § 36.401, a ''shopping center or shopping mall'' is (1) a building housing five or more sales or rental establishments, or (2) a series of buildings on a common site, either under common ownership or common control or developed either as one project or as a series of related projects, housing five or more sales or rental establishments. The term ''shopping center or shopping mall'' only includes floor levels containing at least one sales or rental establishment, or any floor level that was designed or intended for use by at least one sales or rental establishment.

Any sales or rental establishment of the type that is included in paragraph (5) of the definition of ''place of public accommodation'' (for example, a bakery, grocery store, clothing store, or hardware store) is considered a sales or rental establishment for purposes of this definition; the other types of public accommodations (e.g., restaurants, laundromats, banks, travel services, health spas) are not.

In the preamble to the proposed rule, the Department sought comment on whether the definition of ''shopping center or mall'' should be expanded to include any of these other types of public accommodations. The Department also sought comment on whether a series of buildings should fall within the definition only if they are physically connected.

Most of those responding to the first question (overwhelmingly groups representing people with disabilities, or individual commenters) urged that the definition encompass more places of public accommodation, such as restaurants, motion picture houses, laundromats, dry cleaners, and banks. They pointed out that often it is not known what types of establishments will be tenants in a new facility. In addition, they noted that malls are advertised as entities, that their appeal is in the ''package'' of services offered to the public, and that this package often includes the additional types of establishments mentioned.

Commenters representing business groups sought to exempt banks, travel services, grocery stores, drug stores, and freestanding retail stores from the elevator requirement. They based this request on the desire to continue the practice in some locations of incorporating mezzanines housing administrative offices, raised pharmacist areas, and raised areas in the front of supermarkets that house safes and are used by managers to oversee operations of check-out aisles and other functions. Many of these concerns are adequately addressed by ADAAG. Apart from those addressed by ADAAG, the Department sees no reason to treat a particular type of sales or rental establishment differently from any other. Although banks and travel services are not included as ''sales or rental establishments,'' because they do not fall under paragraph (5) of the definition of place of public accommodation, grocery stores and drug stores are included.

The Department has declined to include places of public accommodation other than sales or rental establishments in the definition. The statutory definition of ''public accommodation'' (section 301(7)) lists 12 types of establishments that are considered public

accommodations. Category (E) includes ''a bakery, grocery store, clothing store, hardware store, shopping center, or other sales or rental establishment.'' This arrangement suggests that it is only these types of establishments that would make up a shopping center for purposes of the statute. To include all types of places of public accommodation, or those from 6 or 7 of the categories, as commenters suggest, would overly limit the elevator exemption; the universe of facilities covered by the definition of ''shopping center'' could well exceed the number of multitenant facilities *not* covered, which would render the exemption almost meaningless.

For similar reasons, the Department is retaining the requirement that a building or series of buildings must house five or more sales or rental establishments before it falls within the definition of ''shopping center.'' Numerous commenters objected to the number and requested that the number be lowered from five to three or four. Lowering the number in this manner would include an inordinately large number of two-story multitenant buildings within the category of those required to have elevators.

The responses to the question concerning whether a series of buildings should be connected in order to be covered were varied. Generally, disability rights groups and some government agencies said a series of buildings should not have to be connected, and pointed to a trend in some areas to build shopping centers in a garden or village setting. The Department agrees that this design choice should not negate the elevator requirement for new construction. Some business groups answered the question in the affirmative, and some suggested a different definition of shopping center. For example, one commenter recommended the addition of a requirement that the five or more establishments be physically connected on the non-ground floors by a common pedestrian walkway or pathway, because otherwise a series of stand-alone facilities would have to comply with the elevator requirement, which would be unduly burdensome and perhaps infeasible. Another suggested use of what it characterized as the standard industry definition: ''A group of retail stores and related business facilities, the whole planned, developed, operated and managed as a unit.'' While the rule's definition would reach a series of related projects that are under common control but were not developed as a single project, the Department considers such a facility to be a shopping center within the meaning of the statute. However, in light of the hardship that could confront a series of existing small stand-alone buildings if elevators were required in alterations, the Department has included a common access route in the definition of shopping center or shopping mall for purposes of § 36.404.

Some commenters suggested that access to restrooms and other shared facilities open to the public should be required even if those facilities were not on a shopping floor. Such a provision with respect to toilet or bathing facilities is included in the elevator exception in final ADAAG 4.1.3(5).

For purposes of this subpart, the rule does not distinguish between a ''shopping mall'' (usually a building with a roofed-over common pedestrian area serving more than one tenant in which a majority of the tenants have a main entrance from the common pedestrian area) and a ''shopping center'' (e.g., a ''shopping strip''). Any facility housing five or more of the types of sales or rental establishments described, regardless of the number of other types of places of public accommodation housed there (e.g., offices, movie theatres, restaurants), is a shopping center or shopping mall.

For example, a two-story facility built for mixed-use occupancy on both floors (e.g., by sales and rental establishments, a movie theater, restaurants, and general office space) is a shopping center or shopping mall if it houses five or more sales or rental establishments. If none of these establishments is located on the second floor, then only the ground floor, which contains the sales or rental establishments, would be a ''shopping center or shopping mall,'' unless the second floor was designed or intended for use by at least one sales or rental establishment. In determining whether a floor was intended for such use, factors to be considered include the types of establishments that first occupied the floor, the nature of the developer's marketing strategy, i.e., what types of establishments were sought, and inclusion of any design features particular to rental and sales establishments.

A ''professional office of a health care provider'' is defined as a location where a person or entity regulated by a State to provide professional services related to the physical or mental health of an individual makes such services available to the public. In a two-story development that houses health care providers only on the ground floor, the ''professional office of a health care provider'' is limited to the ground floor unless the second floor was designed or intended for use by a health care provider. In determining if a floor was intended for such use, factors to be considered include whether the facility was constructed with special plumbing, electrical, or other features needed by health care providers, whether the developer marketed the facility as a medical office center, and whether any of the establishments that first occupied the floor was, in fact, a health care provider.

In addition to requiring that a building that is a shopping center, shopping mall, or the professional office of a health care provider have an elevator regardless of square

footage or number of floors, the ADA (section 303(b)) provides that the Attorney General may determine that a particular category of facilities requires the installation of elevators based on the usage of the facilities. The Department, as it proposed to do, has added to the nonexempt categories terminals, depots, or other stations used for specified public transportation, and airport passenger terminals. Numerous commenters in all categories endorsed this proposal; none opposed it. It is not uncommon for an airport passenger terminal or train station, for example, to have only two floors, with gates on both floors. Because of the significance of transportation, because a person with disabilities could be arriving or departing at any gate, and because inaccessible facilities could result in a total denial of transportation services, it is reasonable to require that newly constructed transit facilities be accessible, regardless of square footage or number of floors. One comment suggested an amendment that would treat terminals and stations similarly to shopping centers, by requiring an accessible route only to those areas used for passenger loading and unloading and for other passenger services. Paragraph (d)(2)(ii) has been modified accordingly.

Some commenters suggested that other types of facilities (e.g., educational facilities, libraries, museums, commercial facilities, and social service facilities) should be included in the category of nonexempt facilities. The Department has not found adequate justification for including any other types of facilities in the nonexempt category at this time.

Section 36.401(d)(2) establishes the operative requirements concerning the elevator exemption and its application to shopping centers and malls, professional offices of health care providers, transit stations, and airport passenger terminals. Under the rule's framework, it is necessary first to determine if a new facility (including one or more buildings) houses places of public accommodation or commercial facilities that are in the categories for which elevators are required. If so, and the facility is a shopping center or shopping mall, or a professional office of a health care provider, then any area housing such an office or a sales or rental establishment or the professional office of a health care provider is not entitled to the elevator exemption.

The following examples illustrate the application of these principles:

1. A shopping mall has an upper and a lower level. There are two ''anchor stores'' (in this case, major department stores at either end of the mall, both with exterior entrances and an entrance on each level from the common area). In addition, there are 30 stores (sales or rental establishments) on the upper level, all of which have entrances from a common central area. There are 30 stores on the lower level, all of which have entrances from a common central area. According to the rule, elevator access must be provided to each store and to each level of the anchor stores. This requirement could be satisfied with respect to the 60 stores through elevators connecting the two pedestrian levels, provided that an individual could travel from the elevator to any other point on that level (i.e., into any store through a common pedestrian area) on an accessible path.

2. A commercial (nonresidential) ''townhouse'' development is composed of 20 two-story attached buildings. The facility is developed as one project, with common ownership, and the space will be leased to retailers. Each building has one accessible entrance from a pedestrian walk to the first floor. From that point, one can enter a store on the first floor, or walk up a flight of stairs to a store on the second floor. All 40 stores must be accessible at ground floor level or by accessible vertical access from that level. This does not mean, however, that 20 elevators must be installed. Access could be provided to the second floor by an elevator from the pedestrian area on the lower level to an upper walkway connecting all the areas on the second floor.

3. In the same type of development, it is planned that retail stores will be housed exclusively on the ground floor, with only office space (not professional offices of health care providers) on the second. Elevator access need not be provided to the second floor because all the sales or rental establishments (the entities that make the facility a shopping center) are located on an accessible ground floor.

4. In the same type of development, the space is designed and marketed as medical or office suites, or as a medical office facility. Accessible vertical access must be provided to all areas, as described in example 2.

Some commenters suggested that building owners who knowingly lease or rent space to nonexempt places of public accommodation would violate §36.401. However, the Department does not consider leasing or renting inaccessible space in itself to constitute a violation of this part. Nor does a change in use of a facility, with no accompanying alterations (e.g., if a psychiatrist replaces an attorney as a tenant in a second-floor office, but no alterations are made to the office) trigger accessibility requirements.

Entities cannot evade the requirements of this section by constructing facilities in such a way that no story is intended to constitute a ''ground floor.'' For example, if a private entity constructs a building whose main entrance leads only to stairways or escalators that connect with upper or lower floors, the Department would consider at least one level of the facility a ground story.

The rule requires in §36.401(d)(3), consistent with the proposed rule, that, even if a building falls within the elevator exemption, the floor or floors other than the ground floor must nonetheless be accessible, except for elevator access, to individuals with disabilities, including people who use wheelchairs. This requirement applies to buildings that do not house sales or rental establishments or the professional offices of a health care provider as well as to those in which such establishments or offices are all located on the ground floor. In such a situation, little added cost is entailed in making the second floor accessible, because it is similar in structure and floor plan to the ground floor.

There are several reasons for this provision. First, some individuals who are mobility impaired may work on a building's second floor, which they can reach by stairs and the use of crutches; however, the same individuals, once they reach the second floor, may then use a wheelchair that is kept in the office. Secondly, because the first floor will be accessible, there will be little additional cost entailed in making the second floor, with the same structure and generally the same floor plan, accessible. In addition, the second floor must be accessible to those persons with disabilities who do not need elevators for level changes (for example, persons with sight or hearing impairments and those with certain mobility impairments). Finally, if an elevator is installed in the future for any reason, full access to the floor will be facilitated.

One commenter asserted that this provision goes beyond the Department's authority under the Act, and disagreed with the Department's claim that little additional cost would be entailed in compliance. However, the provision is taken directly from the legislative history (see Education and Labor report at 114).

One commenter said that where an elevator is not required, platform lifts should be required. Two commenters pointed out that the elevator exemption is really an exemption from the requirement for providing an accessible route to a second floor not served by an elevator. The Department agrees with the latter comment. Lifts to provide access between floors are not required in buildings that are not required to have elevators. This point is specifically addressed in the appendix to ADAAG (§4.1.3(5)). ADAAG also addresses in detail the situations in which lifts are permitted or required.

Section 36.402 Alterations

Sections 36.402–36.405 implement section 303(a)(2) of the Act, which requires that alterations to existing facilities be made in a way that ensures that the altered portion is readily accessible to and usable by individuals with disabilities. This part does not require alterations; it simply provides that when alterations are undertaken, they must be made in a manner that provides access.

Section 36.402(a)(1) provides that any alteration to a place of public accommodation or a commercial facility, after January 26, 1992, shall be made so as to ensure that, to the maximum extent feasible, the altered portions of the facility are readily accessible to and usable by individuals with disabilities, including individuals who use wheelchairs.

The proposed rule provided that an alteration would be deemed to be undertaken after January 26, 1992, if the physical alteration of the property is in progress after that date. Commenters pointed out that this provision would, in some cases, produce an unjust result by requiring the redesign or retrofitting of projects initiated before this part established the ADA accessibility standards. The Department agrees that the proposed rule would, in some instances, unfairly penalize projects that were substantially completed before the effective date. Therefore, paragraph (a)(2) has been revised to specify that an alteration will be deemed to be undertaken after January 26, 1992, if the physical alteration of the property begins after that date. As a matter of interpretation, the Department will construe this provision to apply to alterations that require a permit from a State, County or local government, if physical alterations pursuant to the terms of the permit begin after January 26, 1992. The Department recognizes that this application of the effective date may require redesign of some facilities that were planned prior to the publication of this part, but no retrofitting will be required of facilities on which the physical alterations were initiated prior to the effective date of the Act. Of course, nothing in this section in any way alters the obligation of any facility to remove architectural barriers in existing facilities to the extent that such barrier removal is readily achievable.

Paragraph (b) provides that, for the purposes of this part, an ''alteration'' is a change to a place of public accommodation or a commercial facility that affects or could affect the usability of the building or facility or any part thereof. One commenter suggested that the concept of usability should apply only to those changes that affect access by persons with disabilities. The Department remains convinced that the Act requires the concept of ''usability'' to be read broadly to include any change that affects the usability of the facility, not simply changes that relate directly to access by individuals with disabilities.

The Department received a significant number of comments on the examples provided in paragraphs (b)(1) and (b)(2) of the proposed rule. Some commenters urged the Department to limit the application of this provision to major structural modifications,

while others asserted that it should be expanded to include cosmetic changes such as painting and wallpapering. The Department believes that neither approach is consistent with the legislative history, which requires this Department's regulation to be consistent with the accessibility guidelines (ADAAG) developed by the Architectural and Transportation Barriers Compliance Board (ATBCB). Although the legislative history contemplates that, in some instances, the ADA accessibility standards will exceed the current MGRAD requirements, it also clearly indicates the view of the drafters that ''minor changes such as painting or papering walls * * * do not affect usability'' (Education and Labor report at 111, Judiciary report at 64), and, therefore, are not alterations. The proposed rule was based on the existing MGRAD definition of ''alteration.'' The language of the final rule has been revised to be consistent with ADAAG, incorporated as appendix A to this part.

Some commenters sought clarification of the intended scope of this section. The proposed rule contained illustrations of changes that affect usability and those that do not. The intent of the illustrations was to explain the scope of the alterations requirement; the effect was to obscure it. As a result of the illustrations, some commenters concluded that any alteration to a facility, even a minor alteration such as relocating an electrical outlet, would trigger an extensive obligation to provide access throughout an entire facility. That result was never contemplated.

Therefore, in this final rule paragraph (b)(1) has been revised to include the major provisions of paragraphs (b)(1) and (b)(2) of the proposed rule. The examples in the proposed rule have been deleted. Paragraph (b)(1) now provides that alterations include, but are not limited to, remodeling, renovation, rehabilitation, reconstruction, historic restoration, changes or rearrangement in structural parts or elements, and changes or rearrangement in the plan configuration of walls and full-height partitions. Normal maintenance, reroofing, painting or wallpapering, asbestos removal, or changes to mechanical and electrical systems are not alterations unless they affect the usability of building or facility.

Paragraph (b)(2) of this final rule was added to clarify the scope of the alterations requirement. Paragraph (b)(2) provides that if existing elements, spaces, or common areas are altered, then each such altered element, space, or area shall comply with the applicable provisions of appendix A (ADAAG). As provided in §36.403, if an altered space or area is an area of the facility that contains a primary function, then the requirements of that section apply.

Therefore, when an entity undertakes a minor alteration to a place of public accommodation or commercial facility, such as moving an electrical outlet, the new outlet must be installed in compliance with ADAAG. (Alteration of the elements listed in §36.403(c)(2) cannot trigger a path of travel obligation.) If the alteration is to an area, such as an employee lounge or locker room, that is not an area of the facility that contains a primary function, that area must comply with ADAAG. It is only when an alteration affects access to or usability of an area containing a primary function, as opposed to other areas or the elements listed in §36.403(c)(2), that the path of travel to the altered area must be made accessible.

The Department received relatively few comments on paragraph (c), which explains the statutory phrase ''to the maximum extent feasible.'' Some commenters suggested that the regulation should specify that cost is a factor in determining whether it is feasible to make an altered area accessible. The legislative history of the ADA indicates that the concept of feasibility only reaches the question of whether it is possible to make the alteration accessible in compliance with this part. Costs are to be considered only when an alteration to an area containing a primary function triggers an additional requirement to make the path of travel to the altered area accessible.

Section 36.402(c) is, therefore, essentially unchanged from the proposed rule. At the recommendation of a commenter, the Department has inserted the word ''virtually'' to modify ''impossible'' to conform to the language of the legislative history. It explains that the phrase ''to the maximum extent feasible'' as used in this section applies to the occasional case where the nature of an existing facility makes it virtually impossible to comply fully with applicable accessibility standards through a planned alteration. In the occasional cases in which full compliance is impossible, alterations shall provide the maximum physical accessibility feasible. Any features of the facility that are being altered shall be made accessible unless it is technically infeasible to do so. If providing accessibility in conformance with this section to individuals with certain disabilities (e.g., those who use wheelchairs) would not be feasible, the facility shall be made accessible to persons with other types of disabilities (e.g., those who use crutches or who have impaired vision or hearing, or those who have other types of impairments).

Section 36.403 Alterations: Path of Travel

Section 36.403 implements the statutory requirement that any alteration that affects or could affect the usability of or access to an area of a facility that contains a primary function shall be made so as to ensure that, to the maximum extent feasible, the path of travel to the altered area, and the restrooms,

telephones, and drinking fountains serving the altered area, are readily accessible to and usable by individuals with disabilities, including individuals who use wheelchairs, unless the cost and scope of such alterations is disproportionate to the cost of the overall alteration. Paragraph (a) restates this statutory requirement.

Paragraph (b) defines a ''primary function'' as a major activity for which the facility is intended. This paragraph is unchanged from the proposed rule. Areas that contain a primary function include, but are not limited to, the customer services lobby of a bank, the dining area of a cafeteria, the meeting rooms in a conference center, as well as offices and all other work areas in which the activities of the public accommodation or other private entities using the facility are carried out. The concept of ''areas containing a primary function'' is analogous to the concept of ''functional spaces'' in §3.5 of the existing Uniform Federal Accessibility Standards, which defines ''functional spaces'' as ''[t]he rooms and spaces in a building or facility that house the major activities for which the building or facility is intended.''

Paragraph (b) provides that areas such as mechanical rooms, boiler rooms, supply storage rooms, employee lounges and locker rooms, janitorial closets, entrances, corridors, and restrooms are not areas containing a primary function. There may be exceptions to this general rule. For example, the availability of public restrooms at a place of public accommodation at a roadside rest stop may be a major factor affecting customers' decisions to patronize the public accommodation. In that case, a restroom would be considered to be an ''area containing a primary function'' of the facility.

Most of the commenters who addressed this issue supported the approach taken by the Department; but a few commenters suggested that areas not open to the general public or those used exclusively by employees should be excluded from the definition of primary function. The preamble to the proposed rule noted that the Department considered an alternative approach to the definition of ''primary function,'' under which a primary function of a commercial facility would be defined as a major activity for which the facility was intended, while a primary function of a place of public accommodation would be defined as an activity which involves providing significant goods, services, facilities, privileges, advantages, or accommodations. However, the Department concluded that, although portions of the legislative history of the ADA support this alternative, the better view is that the language now contained in §36.403(b) most accurately reflects congressional intent. No commenter made a persuasive argument that the Department's interpretation of the legislative history is incorrect.

When the ADA was introduced, the requirement to make alterations accessible was included in section 302 of the Act, which identifies the practices that constitute discrimination by a public accommodation. Because section 302 applies only to the operation of a place of public accommodation, the alterations requirement was intended only to provide access to clients and customers of a public accommodation. It was anticipated that access would be provided to employees with disabilities under the ''reasonable accommodation'' requirements of title I. However, during its consideration of the ADA, the House Judiciary Committee amended the bill to move the alterations provision from section 302 to section 303, which applies to commercial facilities as well as public accommodations. The Committee report accompanying the bill explains that:

New construction and alterations of both public accommodations and commercial facilities must be made readily accessible to and usable by individuals with disabilities * * *. Essentially, [this requirement] is designed to ensure that patrons *and employees* of public accommodations and commercial facilities are able to get to, enter and use the facility * * *. The rationale for making new construction accessible applies with equal force to alterations.

Judiciary report at 62–63 (emphasis added).

The ADA, as enacted, contains the language of section 303 as it was reported out of the Judiciary Committee. Therefore, the Department has concluded that the concept of ''primary function'' should be applied in the same manner to places of public accommodation and to commercial facilities, thereby including employee work areas in places of public accommodation within the scope of this section.

Paragraph (c) provides examples of alterations that affect the usability of or access to an area containing a primary function. The examples include: Remodeling a merchandise display area or employee work areas in a department store; installing a new floor surface to replace an inaccessible surface in the customer service area or employee work areas of a bank; redesigning the assembly line area of a factory; and installing a computer center in an accounting firm. This list is illustrative, not exhaustive. Any change that affects the usability of or access to an area containing a primary function triggers the statutory obligation to make the path of travel to the altered area accessible.

When the proposed rule was drafted, the Department believed that the rule made it clear that the ADA would require alterations to the path of travel only when such alterations are not disproportionate to the alteration to the primary function area. However, the comments that the Department received

indicated that many commenters believe that even minor alterations to individual elements would require additional alterations to the path of travel. To address the concern of these commenters, a new paragraph (c)(2) has been added to the final rule to provide that alterations to such elements as windows, hardware, controls (e.g. light switches or thermostats), electrical outlets, or signage will not be deemed to be alterations that affect the usability of or access to an area containing a primary function. Of course, each element that is altered must comply with ADAAG (appendix A) . The cost of alterations to individual elements would be included in the overall cost of an alteration for purposes of determining disproportionality and would be counted when determining the aggregate cost of a series of small alterations in accordance with §36.401(h) if the area is altered in a manner that affects access to or usability of an area containing a primary function.

Paragraph (d) concerns the respective obligations of landlords and tenants in the cases of alterations that trigger the path of travel requirement under §36.403. This paragraph was contained in the landlord/tenant section of the proposed rule, §36.201(b). If a tenant is making alterations upon its premises pursuant to terms of a lease that grant it the authority to do so (even if they constitute alterations that trigger the path of travel requirement), and the landlord is not making alterations to other parts of the facility, then the alterations by the tenant on its own premises do not trigger a path of travel obligation upon the landlord in areas of the facility under the landlord's authority that are not otherwise being altered. The legislative history makes clear that the path of travel requirement applies only to the entity that is already making the alteration, and thus the Department has not changed the final rule despite numerous comments suggesting that the tenant be required to provide a path of travel.

Paragraph (e) defines a ''path of travel'' as a continuous, unobstructed way of pedestrian passage by means of which an altered area may be approached, entered, and exited; and which connects the altered area with an exterior approach (including sidewalks, streets, and parking areas), an entrance to the facility, and other parts of the facility. This concept of an accessible path of travel is analogous to the concepts of ''accessible route'' and ''circulation path'' contained in section 3.5 of the current UFAS. Some commenters suggested that this paragraph should address emergency egress. The Department disagrees. ''Path of travel'' as it is used in this section is a term of art under the ADA that relates only to the obligation of the public accommodation or commercial facility to provide additional accessible elements when an area containing a primary function is altered. The Department recognizes that emergency egress is an important issue, but believes that it is appropriately addressed in ADAAG (appendix A), not in this paragraph. Furthermore, ADAAG does not require changes to emergency egress areas in alterations.

Paragraph (e)(2) is drawn from section 3.5 of UFAS. It provides that an accessible path of travel may consist of walks and sidewalks, curb ramps and other interior or exterior pedestrian ramps; clear floor paths through lobbies, corridors, rooms, and other improved areas; parking access aisles; elevators and lifts; or a combination of such elements. Paragraph (e)(3) provides that, for the purposes of this part, the term ''path of travel'' also includes the restrooms, telephones, and drinking fountains serving an altered area.

Although the Act establishes an expectation that an accessible path of travel should generally be included when alterations are made to an area containing a primary function, Congress recognized that, in some circumstances, providing an accessible path of travel to an altered area may be sufficiently burdensome in comparison to the alteration being undertaken to the area containing a primary function as to render this requirement unreasonable. Therefore, Congress provided, in section 303(a)(2) of the Act, that alterations to the path of travel that are disproportionate in cost and scope to the overall alteration are not required.

The Act requires the Attorney General to determine at what point the cost of providing an accessible path of travel becomes disproportionate. The proposed rule provided three options for making this determination.

Two committees of Congress specifically addressed this issue: the House Committee on Education and Labor and the House Committee on the Judiciary. The reports issued by each committee suggested that accessibility alterations to a path of travel might be ''disproportionate'' if they exceed 30% of the alteration costs (Education and Labor report at 113; Judiciary report at 64). Because the Department believed that smaller percentage rates might be appropriate, the proposed rule sought comments on three options: 10%, 20%, or 30%.

The Department received a significant number of comments on this section. Commenters representing individuals with disabilities generally supported the use of 30% (or more); commenters representing covered entities supported a figure of 10% (or less). The Department believes that alterations made to provide an accessible path of travel to the altered area should be deemed disproportionate to the overall alteration when the cost exceeds 20% of the cost of the alteration to the primary function area. This approach appropriately reflects the intent of Congress to provide access for individuals with disabilities without causing economic

hardship for the covered public accommodations and commercial facilities.

The Department has determined that the basis for this cost calculation shall be the cost of the alterations to the area containing the primary function. This approach will enable the public accommodation or other private entity that is making the alteration to calculate its obligation as a percentage of a clearly ascertainable base cost, rather than as a percentage of the ''total'' cost, an amount that will change as accessibility alterations to the path of travel are made.

Paragraph (f)(2) (paragraph (e)(2) in the proposed rule) is unchanged. It provides examples of costs that may be counted as expenditures required to provide an accessible path of travel. They include:

• Costs associated with providing an accessible entrance and an accessible route to the altered area, for example, the cost of widening doorways or installing ramps;

• Costs associated with making restrooms accessible, such as installing grab bars, enlarging toilet stalls, insulating pipes, or installing accessible faucet controls;

• Costs associated with providing accessible telephones, such as relocating telephones to an accessible height, installing amplification devices, or installing telecommunications devices for deaf persons (TDD's);

• Costs associated with relocating an inaccessible drinking fountain.

Paragraph (f)(1) of the proposed rule provided that when the cost of alterations necessary to make the path of travel serving an altered area fully accessible is disproportionate to the cost of the overall alteration, the path of travel shall be made accessible to the maximum extent feasible. In response to the suggestion of a commenter, the Department has made an editorial change in the final rule (paragraph (g)(1)) to clarify that if the cost of providing a fully accessible path of travel is disproportionate, the path of travel shall be made accessible ''to the extent that it can be made accessible without incurring disproportionate costs.''

Paragraph (g)(2) (paragraph (f)(2) in the NPRM) establishes that priority should be given to those elements that will provide the greatest access, in the following order: An accessible entrance; an accessible route to the altered area; at least one accessible restroom for each sex or a single unisex restroom; accessible telephones; accessible drinking fountains; and, whenever possible, additional accessible elements such as parking, storage, and alarms. This paragraph is unchanged from the proposed rule.

Paragraph (h) (paragraph (g) in the proposed rule) provides that the obligation to provide an accessible path of travel may not be evaded by performing a series of small alterations to the area served by a single path of travel if those alterations could have been performed as a single undertaking. If an area containing a primary function has been altered without providing an accessible path of travel to serve that area, and subsequent alterations of that area, or a different area on the same path of travel, are undertaken within three years of the original alteration, the total cost of alterations to primary function areas on that path of travel during the preceding three year period shall be considered in determining whether the cost of making the path of travel serving that area accessible is disproportionate. Only alterations undertaken after January 26, 1992, shall be considered in determining if the cost of providing accessible features is disproportionate to the overall cost of the alterations.

Section 36.404 Alterations: Elevator Exemption

Section 36.404 implements the elevator exemption in section 303(b) of the Act as it applies to altered facilities. The provisions of section 303(b) are discussed in the preamble to §36.401(d) above. The statute applies the same exemption to both new construction and alterations. The principal difference between the requirements of §36.401(d) and §36.404 is that, in altering an existing facility that is not eligible for the statutory exemption, the public accommodation or other private entity responsible for the alteration is not required to install an elevator if the installation of an elevator would be disproportionate in cost and scope to the cost of the overall alteration as provided in §36.403(f)(1). In addition, the standards referenced in §36.406 (ADAAG) provide that installation of an elevator in an altered facility is not required if it is ''technically infeasible.''

This section has been revised to define the terms ''professional office of a health care provider'' and ''shopping center or shopping mall'' for the purposes of this section. The definition of ''professional office of a health care provider'' is identical to the definition included in §36.401(d).

It has been brought to the attention of the Department that there is some misunderstanding about the scope of the elevator exemption as it applies to the professional office of a health care provider. A public accommodation, such as the professional office of a health care provider, is required to remove architectural barriers to its facility to the extent that such barrier removal is readily achievable (see §36.304), but it is not otherwise required by this part to undertake new construction or alterations. This part does not require that an existing two story building that houses the professional office of a health care provider be altered for the purpose of providing elevator access. If, however, alterations to the area housing the office of the health care provider are undertaken for other purposes, the installation of

an elevator might be required, but only if the cost of the elevator is not disproportionate to the cost of the overall alteration. Neither the Act nor this part prohibits a health care provider from locating his or her professional office in an existing facility that does not have an elevator.

Because of the unique challenges presented in altering existing facilities, the Department has adopted a definition of ''shopping center or shopping mall'' for the purposes of this section that is slightly different from the definition adopted under §36.401(d). For the purposes of this section, a ''shopping center or shopping mall'' is (1) a building housing five or more sales or rental establishments, or (2) a series of buildings on a common site, connected by a common pedestrian access route above or below the ground floor, either under common ownership or common control or developed either as one project or as a series of related projects, housing five or more sales or rental establishments. As is the case with new construction, the term ''shopping center or shopping mall'' only includes floor levels housing at least one sales or rental establishment, or any floor level that was designed or intended for use by at least one sales or rental establishment.

The Department believes that it is appropriate to use a different definition of ''shopping center or shopping mall'' for this section than for §36.401, in order to make it clear that a series of existing buildings on a common site that is altered for the use of sales or rental establishments does not become a ''shopping center or shopping mall'' required to install an elevator, unless there is a common means of pedestrian access above or below the ground floor. Without this exemption, separate, but adjacent, buildings that were initially designed and constructed independently of each other could be required to be retrofitted with elevators, if they were later renovated for a purpose not contemplated at the time of construction.

Like §36.401(d), §36.404 provides that the exemptions in this paragraph do not obviate or limit in any way the obligation to comply with the other accessibility requirements established in this subpart. For example, alterations to floors above or below the ground floor must be accessible regardless of whether the altered facility has an elevator. If a facility that is not required to install an elevator nonetheless has an elevator, that elevator shall meet, to the maximum extent feasible, the accessibility requirements of this section.

Section 36.405 Alterations: Historic Preservation

Section 36.405 gives effect to the intent of Congress, expressed in section 504(c) of the Act, that this part recognize the national interest in preserving significant historic structures. Commenters criticized the Department's use of descriptive terms in the proposed rule that are different from those used in the ADA to describe eligible historic properties. In addition, some commenters criticized the Department's decision to use the concept of ''substantially impairing'' the historic features of a property, which is a concept employed in regulations implementing section 504 of the Rehabilitation Act of 1973. Those commenters recommended that the Department adopt the criteria of ''adverse effect'' published by the Advisory Council on Historic Preservation under the National Historic Preservation Act (36 CFR 800.9) as the standard for determining whether an historic property may be altered.

The Department agrees with these comments to the extent that they suggest that the language of the rule should conform to the language employed by Congress in the ADA. Therefore, the language of this section has been revised to make it clear that this provision applies to buildings or facilities that are eligible for listing in the National Register of Historic Places under the National Historic Preservation Act (16 U.S.C. 470 *et seq.*) and to buildings or facilities that are designated as historic under State or local law. The Department believes, however, that the criteria of adverse effect employed under the National Historic Preservation Act are inappropriate for this rule because section 504(c) of the ADA specifies that special alterations provisions shall apply only when an alteration would ''threaten or destroy the historic significance of qualified historic buildings and facilities.''

The Department intends that the exception created by this section be applied only in those very rare situations in which it is not possible to provide access to an historic property using the special access provisions in ADAAG. Therefore, paragraph (a) of §36.405 has been revised to provide that alterations to historic properties shall comply, to the maximum extent feasible, with section 4.1.7 of ADAAG. Paragraph (b) of this section has been revised to provide that if it has been determined, under the procedures established in ADAAG, that it is not feasible to provide physical access to an historic property that is a place of public accommodation in a manner that will not threaten or destroy the historic significance of the property, alternative methods of access shall be provided pursuant to the requirements of Subpart C.

Section 36.406 Standards for New Construction and Alterations

Section 36.406 implements the requirements of sections 306(b) and 306(c) of the Act, which require the Attorney General to promulgate standards for accessible design for buildings and facilities subject to the Act

and this part that are consistent with the supplemental minimum guidelines and requirements for accessible design published by the Architectural and Transportation Barriers Compliance Board (ATBCB or Board) pursuant to section 504 of the Act. This section of the rule provides that new construction and alterations subject to this part shall comply with the standards for accessible design published as appendix A to this part.

Appendix A contains the Americans with Disabilities Act Accessibility Guidelines for Buildings and Facilities (ADAAG) which is being published by the ATBCB as a final rule elsewhere in this issue of the FEDERAL REGISTER. As proposed in this Department's proposed rule, §36.406(a) adopts ADAAG as the accessibility standard applicable under this rule.

Paragraph (b) was not included in the proposed rule. It provides, in chart form, guidance for using ADAAG together with subparts A through D of this part when determining requirements for a particular facility. This chart is intended solely as guidance for the user; it has no effect for purposes of compliance or enforcement. It does not necessarily provide complete or mandatory information.

Proposed §36.406(b) is not included in the final rule. That provision, which would have taken effect only if the final rule had followed the proposed Option Two for §36.401(a), is unnecessary because the Department has chosen Option One, as explained in the preamble for that section.

Section 504(a) of the ADA requires the ATBCB to issue minimum guidelines to supplement the existing Minimum Guidelines and Requirements for Accessible Design (MGRAD) (36 CFR part 1190) for purposes of title III. According to section 504(b) of the Act, the guidelines are to establish additional requirements, consistent with the Act, ''to ensure that buildings and facilities are accessible, in terms of architecture and design, . . . and communication, to individuals with disabilities.'' Section 306(c) of the Act requires that the accessibility standards included in the Department's regulations be consistent with the minimum guidelines, in this case ADAAG.

As explained in the ATBCB's preamble to ADAAG, the substance and form of the guidelines are drawn from several sources. They use as their model the 1984 Uniform Federal Accessibility Standards (UFAS) (41 CFR part 101, subpart 101–19.6, appendix), which are the standards implementing the Architectural Barriers Act. UFAS is based on the Board's 1982 MGRAD. ADAAG follows the numbering system and format of the private sector American National Standard Institute's ANSI A117.1 standards. (American National Specifications for Making Buildings and Facilities Accessible to and Usable by Physically Handicapped People (ANSI A117–1980) and American National Standard for Buildings and Facilities—Providing Accessibility and Usability for Physically Handicapped People (ANSI A117.1–1986).) ADAAG supplements MGRAD. In developing ADAAG, the Board made every effort to be consistent with MGRAD and the current and proposed ANSI Standards, to the extent consistent with the ADA.

ADAAG consists of nine main sections and a separate appendix. Sections 1 through 3 contain general provisions and definitions. Section 4 contains scoping provisions and technical specifications applicable to all covered buildings and facilities. The scoping provisions are listed separately for new construction of sites and exterior facilities; new construction of buildings; additions; alterations; and alterations to historic properties. The technical specifications generally reprint the text and illustrations of the ANSI A117.1 standard, except where differences are noted by italics. Sections 5 through 9 of the guidelines are special application sections and contain additional requirements for restaurants and cafeterias, medical care facilities, business and mercantile facilities, libraries, and transient lodging. The appendix to the guidelines contains additional information to aid in understanding the technical specifications. The section numbers in the appendix correspond to the sections of the guidelines to which they relate. An asterisk after a section number indicates that additional information appears in the appendix.

ADAAG's provisions are further explained under Summary of ADAAG below.

GENERAL COMMENTS

One commenter urged the Department to move all or portions of subpart D, New Construction and Alterations, to the appendix (ADAAG) or to duplicate portions of subpart D in the appendix. The commenter correctly pointed out that subpart D is inherently linked to ADAAG, and that a self-contained set of rules would be helpful to users. The Department has attempted to simplify use of the two documents by deleting some paragraphs from subpart D (e.g., those relating to work areas), because they are included in ADAAG. However, the Department has retained in subpart D those sections that are taken directly from the statute or that give meaning to specific statutory concepts (e.g., structural impracticability, path of travel). While some of the subpart D provisions are duplicated in ADAAG, others are not. For example, issues relating to path of travel and disproportionality in alterations are not addressed in detail in ADAAG. (The structure and contents of the two documents are addressed below under Summary of ADAAG.) While the Department agrees that it would

be useful to have one self-contained document, the different focuses of this rule and ADAAG do not permit this result at this time. However, the chart included in §36.406(b) should assist users in applying the provisions of subparts A through D, and ADAAG together.

Numerous business groups have urged the Department not to adopt the proposed ADAAG as the accessibility standards, because the requirements established are too high, reflect the ''state of the art,'' and are inflexible, rigid, and impractical. Many of these objections have been lodged on the basis that ADAAG exceeds the statutory mandate to establish ''minimum'' guidelines. In the view of the Department, these commenters have misconstrued the meaning of the term ''minimum guidelines.'' The statute clearly contemplates that the guidelines establish a level of access—a minimum—that the standards must meet or exceed. The guidelines are not to be ''minimal'' in the sense that they would provide for a low level of access. To the contrary, Congress emphasized that the ADA requires a ''high degree of convenient access.'' Education and Labor report at 117–18. The legislative history explains that the guidelines may not ''reduce, weaken, narrow or set less accessibility standards than those included in existing MGRAD'' and should provide greater guidance in communication accessibility for individuals with hearing and vision impairments. Id. at 139. Nor did Congress contemplate a set of guidelines less detailed than ADAAG; the statute requires that the ADA guidelines supplement the existing MGRAD. When it established the statutory scheme, Congress was aware of the content and purpose of the 1982 MGRAD; as ADAAG does with respect to ADA, MGRAD establishes a minimum level of access that the Architectural Barriers Act standards (i.e., UFAS) must meet or exceed, and includes a high level of detail.

Many of the same commenters urged the Department to incorporate as its accessibility standards the ANSI standard's technical provisions and to adopt the proposed scoping provisions under development by the Council of American Building Officials' Board for the Coordination of Model Codes (BCMC). They contended that the ANSI standard is familiar to and accepted by professionals, and that both documents are developed through consensus. They suggested that ADAAG will not stay current, because it does not follow an established cyclical review process, and that it is not likely to be adopted by nonfederal jurisdictions in State and local codes. They urged the Department and the Board to coordinate the ADAAG provisions and any substantive changes to them with the ANSI A117 committee in order to maintain a consistent and uniform set of accessibility standards that can be efficiently and effectively implemented at the State and local level through the existing building regulatory processes.

The Department shares the commenters' goal of coordination between the private sector and Federal standards, to the extent that coordination can lead to substantive requirements consistent with the ADA. A single accessibility standard, or consistent accessibility standards, that can be used for ADA purposes and that can be incorporated or referenced by State and local governments, would help to ensure that the ADA requirements are routinely implemented at the design stage. The Department plans to work toward this goal.

The Department, however, must comply with the requirements of the ADA, the Federal Advisory Committee Act (5 U.S.C app. 1 *et seq.*) and the Administrative Procedure Act (5 U.S.C 551 *et seq.*). Neither the Department nor the Board can adopt private requirements wholesale. Furthermore, neither the 1991 ANSI A117 Standard revision nor the BCMC process is complete. Although the ANSI and BCMC provisions are not final, the Board has carefully considered both the draft BCMC scoping provisions and draft ANSI technical standards and included their language in ADAAG wherever consistent with the ADA.

Some commenters requested that, if the Department did not adopt ANSI by reference, the Department declare compliance with ANSI/BCMC to constitute equivalency with the ADA standards. The Department has not adopted this recommendation but has instead worked as a member of the ATBCB to ensure that its accessibility standards are practical and usable. In addition, as explained under subpart F, Certification of State Laws or Local Building Codes, the proper forum for further evaluation of this suggested approach would be in conjunction with the certification process.

Some commenters urged the Department to allow an additional comment period after the Board published its guidelines in final form, for purposes of affording the public a further opportunity to evaluate the appropriateness of including them as the Departments accessibility standards. Such an additional comment period is unnecessary and would unduly delay the issuance of final regulations. The Department put the public on notice, through the proposed rule, of its intention to adopt the proposed ADAAG, with any changes made by the Board, as the accessibility standards. As a member of the Board and of its ADA Task Force, the Department participated actively in the public hearings held on the proposed guidelines and in preparation of both the proposed and final versions of ADAAG. Many individuals and groups commented directly to the Department's docket, or at its public hearings, about ADAAG. The comments received on

ADAAG, whether by the Board or by this Department, were thoroughly analyzed and considered by the Department in the context of whether the proposed ADAAG was consistent with the ADA and suitable for adoption as both guidelines and standards. The Department is convinced that ADAAG as adopted in its final form is appropriate for these purposes. The final guidelines, adopted here as standards, will ensure the high level of access contemplated by Congress, consistent with the ADA's balance between the interests of people with disabilities and the business community.

A few commenters, citing the Senate report (at 70) and the Education and Labor report (at 119), asked the Department to include in the regulations a provision stating that departures from particular technical and scoping requirements of the accessibility standards will be permitted so long as the alternative methods used will provide substantially equivalent or greater access to and utilization of the facility. Such a provision is found in ADAAG 2.2 and by virtue of that fact is included in these regulations.

Comments on specific provisions of proposed ADAAG

During the course of accepting comments on its proposed rule, the Department received numerous comments on ADAAG. Those areas that elicited the heaviest response included assistive listening systems, automated teller machines, work areas, parking, areas of refuge, telephones (scoping for TDD's and volume controls) and visual alarms. Strenuous objections were raised by some business commenters to the proposed provisions of the guidelines concerning check-out aisles, counters, and scoping for hotels and nursing facilities. All these comments were considered in the same manner as other comments on the Department's proposed rule and, in the Department's view, have been addressed adequately in the final ADAAG.

Largely in response to comments, the Board made numerous changes from its proposal, including the following:

• Generally, at least 50% of public entrances to new buildings must be accessible, rather than all entrances, as would often have resulted from the proposed approach.

• Not all check-out aisles are required to be accessible.

• The final guidelines provide greater flexibility in providing access to sales counters, and no longer require a portion of every counter to be accessible.

• Scoping for TDD's or text telephones was increased. One TDD or text telephone, for speech and hearing impaired persons, must be provided at locations with 4, rather than 6, pay phones, and in hospitals and shopping malls. Use of portable (less expensive) TDD's is allowed.

• Dispersal of wheelchair seating areas in theaters will be required only where there are more than 300 seats, rather than in all cases. Seats with removable armrests (i.e., seats into which persons with mobility impairments can transfer) will also be required.

• Areas of refuge (areas with direct access to a stairway, and where people who cannot use stairs may await assistance during an emergency evacuation) will be required, as proposed, but the final provisions are based on the Uniform Building Code. Such areas are not required in alterations.

• Rather than requiring 5% of new hotel rooms to be accessible to people with mobility impairments, between 2 and 4% accessibility (depending on total number of rooms) is required. In addition, 1% of the rooms must have roll-in showers.

• The proposed rule reserved the provisions on alterations to homeless shelters. The final guidelines apply alterations requirements to homeless shelters, but the requirements are less stringent than those applied to other types of facilities.

• Parking spaces that can be used by people in vans (with lifts) will be required.

• As mandated by the ADA, the Board has established a procedure to be followed with respect to alterations to historic facilities.

SUMMARY OF ADAAG

This section of the preamble summarizes the structure of ADAAG, and highlights the more important portions.

• *Sections 1 Through 3*

Sections 1 through 3 contain general requirements, including definitions.

• *Section 4.1.1, Application*

Section 4 contains scoping requirements. Section 4.1.1, Application, provides that all areas of newly designed or newly constructed buildings and facilities and altered portions of existing buildings and facilities required to be accessible by §4.1.6 must comply with the guidelines unless otherwise provided in §4.1.1 or a special application section. It addresses areas used only by employees as work areas, temporary structures, and general exceptions.

Section 4.1.1(3) preserves the basic principle of the proposed rule: Areas that may be used by employees with disabilities shall be designed and constructed so that an individual with a disability can approach, enter, and exit the area. The language has been clarified to provide that it applies to any area used only as a work area (not just to areas ''that may be used by employees with disabilities''), and that the guidelines do not require that any area used as an individual work station be designed with maneuvering space or equipped to be accessible. The appendix to ADAAG explains that work areas

must meet the guidelines' requirements for doors and accessible routes, and recommends, but does not require, that 5% of individual work stations be designed to permit a person using a wheelchair to maneuver within the space.

Further discussion of work areas is found in the preamble concerning proposed §36.401(b).

Section 4.1.1(5)(a) includes an exception for structural impracticability that corresponds to the one found in §36.401(c) and discussed in that portion of the preamble.

• *Section 4.1.2, Accessible Sites and Exterior Facilities: New Construction*

This section addresses exterior features, elements, or spaces such as parking, portable toilets, and exterior signage, in new construction. Interior elements and spaces are covered by §4.1.3.

The final rule retains the UFAS scoping for parking but also requires that at least one of every eight accessible parking spaces be designed with adequate adjacent space to deploy a lift used with a van. These spaces must have a sign indicating that they are van-accessible, but they are not to be reserved exclusively for van users.

• *Section 4.1.3, Accessible Buildings: New Construction*

This section establishes scoping requirements for new construction of buildings and facilities.

Sections 4.1.3 (1) through (4) cover accessible routes, protruding objects, ground and floor surfaces, and stairs.

Section 4.1.3(5) generally requires elevators to serve each level in a newly constructed building, with four exceptions included in the subsection. Exception 1 is the ''elevator exception'' established in §36.401(d), which must be read with this section. Exception 4 allows the use of platform lifts under certain conditions.

Section 4.1.3(6), Windows, is reserved. Section 4.1.3(7) applies to doors.

Under §4.1.3(8), at least 50% of all public entrances must be accessible. In addition, if a building is designed to provide access to enclosed parking, pedestrian tunnels, or elevated walkways, at least one entrance that serves each such function must be accessible. Each tenancy in a building must be served by an accessible entrance. Where local regulations (e.g., fire codes) require that a minimum number of exits be provided, an equivalent number of accessible entrances must be provided. (The latter provision does not require a greater number of entrances than otherwise planned.)

ADAAG Section 4.1.3(9), with accompanying technical requirements in Section 4.3, requires an area of rescue assistance (*i.e.*, an area with direct access to an exit stairway and where people who are unable to use stairs may await assistance during an emergency evacuation) to be established on each floor of a multi-story building. This was one of the most controversial provisions in the guidelines. The final ADAAG is based on current Uniform Building Code requirements and retains the requirement that areas of refuge (renamed ''areas of rescue assistance'') be provided, but specifies that this requirement does not apply to buildings that have a supervised automatic sprinkler system. Areas of refuge are not required in alterations.

The next seven subsections deal with drinking fountains (§4.1.3(10)); toilet facilities (§4.1.3(11)); storage, shelving, and display units (§4.1.3(12)), controls and operating mechanisms (§4.1.3(13)), emergency warning systems (§4.1.3(14)), detectable warnings (§4.1.3(15)), and building signage (§4.1.3(16)). Paragraph 11 requires that toilet facilities comply with §4.22, which requires one accessible toilet stall (60<″×60<″) in each newly constructed restroom. In response to public comments, the final rule requires that a second accessible stall (36<″×60<″) be provided in restrooms that have six or more stalls.

ADAAG Section 4.1.3(17) establishes requirements for accessibility of pay phones to persons with mobility impairments, hearing impairments (requiring some phones with volume controls), and those who cannot use voice telephones. It requires one interior ''text telephone'' to be provided at any facility that has a total of four or more public pay phones. (The term ''text telephone'' has been adopted to reflect current terminology and changes in technology.) In addition, text telephones will be required in specific locations, such as covered shopping malls, hospitals (in emergency rooms, waiting rooms, and recovery areas), and convention centers.

Paragraph 18 of Section 4.1.3 generally requires that at least five percent of fixed or built-in seating or tables be accessible.

Paragraph 19, covering assembly areas, specifies the number of wheelchair seating spaces and types and numbers of assistive listening systems required. It requires dispersal of wheelchair seating locations in facilities where there are more than 300 seats. The guidelines also require that at least one percent of all fixed seats be aisle seats without armrests (or with moveable armrests) on the aisle side to increase accessibility for persons with mobility impairments who prefer to transfer from their wheelchairs to fixed seating. In addition, the final ADAAG requires that fixed seating for a companion be located adjacent to each wheelchair location.

Paragraph 20 requires that where automated teller machines are provided, at least one must comply with section 4.34, which, among other things, requires accessible controls, and instructions and other information

that are accessible to persons with sight impairments.

Under paragraph 21, where dressing rooms are provided, five percent or at least one must comply with section 4.35.

• *Section 4.1.5, Additions*

Each addition to an existing building or facility is regarded as an alteration subject to §§36.402 through 36.406 of subpart D, including the date established in §36.402(a). But additions also have attributes of new construction, and to the extent that a space or element in the addition is newly constructed, each new space or element must comply with the applicable scoping provisions of sections 4.1.1 to 4.1.3 for new construction, the applicable technical specifications of sections 4.2 through 4.34, and any applicable special provisions in sections 5 through 10. For instance, if a restroom is provided in the addition, it must comply with the requirements for new construction. Construction of an addition does not, however, create an obligation to retrofit the entire existing building or facility to meet requirements for new construction. Rather, the addition is to be regarded as an alteration and to the extent that it affects or could affect the usability of or access to an area containing a primary function, the requirements in section 4.1.6(2) are triggered with respect to providing an accessible path of travel to the altered area and making the restrooms, telephones, and drinking fountains serving the altered area accessible. For example, if a museum adds a new wing that does not have a separate entrance as part of the addition, an accessible path of travel would have to be provided through the existing building or facility unless it is disproportionate to the overall cost and scope of the addition as established in §36.403(f).

• *Section 4.1.6, Alterations*

An alteration is a change to a building or facility that affects or could affect the usability of or access to the building or facility or any part thereof. There are three general principles for alterations. First, if any existing element or space is altered, the altered element or space must meet new construction requirements (section 4.1.6(1)(b)). Second, if alterations to the elements in a space when considered together amount to an alteration of the space, the entire space must meet new construction requirements (section 4.1.6(1)(c)). Third, if the alteration affects or could affect the usability of or access to an area containing a primary function, the path of travel to the altered area and the restrooms, drinking fountains, and telephones serving the altered area must be made accessible unless it is disproportionate to the overall alterations in terms of cost and scope as determined under criteria established by the Attorney General (§4.1.6(2)).

Section 4.1.6 should be read with §§36.402 through 36.405. Requirements concerning alterations to an area serving a primary function are addressed with greater detail in the latter sections than in section 4.1.6(2). Section 4.1.6(1)(j) deals with technical infeasibility. Section 4.1.6(3) contains special technical provisions for alterations to existing buildings and facilities.

• *Section 4.1.7, Historic Preservation*

This section contains scoping provisions and alternative requirements for alterations to qualified historic buildings and facilities. It clarifies the procedures under the National Historic Preservation Act and their application to alterations covered by the ADA. An individual seeking to alter a facility that is subject to the ADA guidelines and to State or local historic preservation statutes shall consult with the State Historic Preservation Officer to determine if the planned alteration would threaten or destroy the historic significance of the facility.

• *Sections 4.2 Through 4.35*

Sections 4.2 through 4.35 contain the technical specifications for elements and spaces required to be accessible by the scoping provisions (sections 4.1 through 4.1.7) and special application sections (sections 5 through 10). The technical specifications are the same as the 1980 version of ANSI A117.1 standard, except as noted in the text by italics.

• *Sections 5 Through 9*

These are special application sections and contain additional requirements for restaurants and cafeterias, medical care facilities, business and mercantile facilities, libraries, and transient lodging. For example, at least 5 percent, but not less than one, of the fixed tables in a restaurant must be accessible.

In section 7, Business and Mercantile, paragraph 7.2 (Sales and Service Counters, Teller Windows, Information Counters) has been revised to provide greater flexibility in new construction than did the proposed rule. At least one of each type of sales or service counter where a cash register is located shall be made accessible. Accessible counters shall be dispersed throughout the facility. At counters such as bank teller windows or ticketing counters, alternative methods of compliance are permitted. A public accommodation may lower a portion of the counter, provide an auxiliary counter, or provide equivalent facilitation through such means as installing a folding shelf on the front of the counter at an accessible height to provide a work surface for a person using a wheelchair.

Section 7.3., Check-out Aisles, provides that, in new construction, a certain number of each design of check-out aisle, as listed in a chart based on the total number of check-out aisles of each design, shall be accessible. The percentage of check-outs required to be accessible generally ranges from 20% to 40%. In a newly constructed or altered facility with less than 5,000 square feet of selling space, at least one of each type of check-out aisle must be accessible. In altered facilities with 5,000 or more square feet of selling space, at least one of each design of check-out aisle must be made accessible when altered, until the number of accessible aisles of each design equals the number that would be required for new construction.

• *Section 9, Accessible Transient Lodging*

Section 9 addresses two types of transient lodging: hotels, motels, inns, boarding houses, dormitories, resorts, and other similar places (sections 9.1 through 9.4); and homeless shelters, halfway houses, transient group homes, and other social service establishments (section 9.5). The interplay of the ADA and Fair Housing Act with respect to such facilities is addressed in the preamble discussion of the definition of ''place of public accommodation'' in §36.104.

The final rule establishes scoping requirements for accessibility of newly constructed hotels. Four percent of the first hundred rooms, and roughly two percent of rooms in excess of 100, must meet certain requirements for accessibility to persons with mobility or hearing impairments, and an additional identical percentage must be accessible to persons with hearing impairments. An additional 1% of the available rooms must be equipped with roll-in showers, raising the actual scoping for rooms accessible to persons with mobility impairments to 5% of the first hundred rooms and 3% thereafter. The final ADAAG also provides that when a hotel is being altered, one fully accessible room and one room equipped with visual alarms, notification devices, and amplified telephones shall be provided for each 25 rooms being altered until the number of accessible rooms equals that required under the new construction standard. Accessible rooms must be dispersed in a manner that will provide persons with disabilities with a choice of single or multiple-bed accommodations.

In new construction, homeless shelters and other social service entities must comply with ADAAG; at least one type of amenity in each common area must be accessible. In a facility that is not required to have an elevator, it is not necessary to provide accessible amenities on the inaccessible floors if at least one of each type of amenity is provided in accessible common areas. The percentage of accessible sleeping accommodations required is the same as that required for other places of transient lodging. Requirements for facilities altered for use as a homeless shelter parallel the current MGRAD accessibility requirements for leased buildings. A shelter located in an altered facility must have at least one accessible entrance, accessible sleeping accommodations in a number equivalent to that established for new construction, at least one accessible toilet and bath, at least one accessible common area, and an accessible route connecting all accessible areas. All accessible areas in a homeless shelter in an altered facility may be located on one level.

Section 10, Transportation Facilities

Section 10 of ADAAG is reserved. On March 20, 1991, the ATBCB published a supplemental notice of proposed rulemaking (56 FR 11874) to establish special access requirements for transportation facilities. The Department anticipates that when the ATBCB issues final guidelines for transportation facilities, this part will be amended to include those provisions.

Subpart E—Enforcement

Because the Department of Justice does not have authority to establish procedures for judicial review and enforcement, subpart E generally restates the statutory procedures for enforcement.

Section 36.501 describes the procedures for private suits by individuals and the judicial remedies available. In addition to the language in section 308(a)(1) of the Act, §36.501(a) of this part includes the language from section 204(a) of the Civil Rights Act of 1964 (42 U.S.C. 2000a–3(a)) which is incorporated by reference in the ADA. A commenter noted that the proposed rule did not include the provision in section 204(a) allowing the court to appoint an attorney for the complainant and authorize the commencement of the civil action without the payment of fees, costs, or security. That provision has been included in the final rule.

Section 308(a)(1) of the ADA permits a private suit by an individual who has reasonable grounds for believing that he or she is ''about to be'' subjected to discrimination in violation of section 303 of the Act (subpart D of this part), which requires that new construction and alterations be readily accessible to and usable by individuals with disabilities. Authorizing suits to prevent construction of facilities with architectural barriers will avoid the necessity of costly retrofitting that might be required if suits were not permitted until after the facilities were completed. To avoid unnecessary suits, this section requires that the individual bringing the suit have 'reasonable grounds' for believing that a violation is about to occur, but does not require the individual to engage in

a futile gesture if he or she has notice that a person or organization covered by title III of the Act does not intend to comply with its provisions.

Section 36.501(b) restates the provisions of section 308(a)(2) of the Act, which states that injunctive relief for the failure to remove architectural barriers in existing facilities or the failure to make new construction and alterations accessible ''shall include'' an order to alter these facilities to make them readily accessible to and usable by persons with disabilities to the extent required by title III. The Report of the Energy and Commerce Committee notes that ''an order to make a facility readily accessible to and usable by individuals with disabilities is mandatory'' under this standard. H.R. Rep. No. 485, 101st Cong., 2d Sess, pt 4, at 64 (1990). Also, injunctive relief shall include, where appropriate, requiring the provision of an auxiliary aid or service, modification of a policy, or provision of alternative methods, to the extent required by title III of the Act and this part.

Section 36.502 is based on section 308(b)(1)(A)(i) of the Act, which provides that the Attorney General shall investigate alleged violations of title III and undertake periodic reviews of compliance of covered entities. Although the Act does not establish a comprehensive administrative enforcement mechanism for investigation and resolution of all complaints received, the legislative history notes that investigation of alleged violations and periodic compliance reviews are essential to effective enforcement of title III, and that the Attorney General is expected to engage in active enforcement and to allocate sufficient resources to carry out this responsibility. Judiciary Report at 67.

Many commenters argued for inclusion of more specific provisions for administrative resolution of disputes arising under the Act and this part in order to promote voluntary compliance and avoid the need for litigation. Administrative resolution is far more efficient and economical than litigation, particularly in the early stages of implementation of complex legislation when the specific requirements of the statute are not widely understood. The Department has added a new paragraph (c) to this section authorizing the Attorney General to initiate a compliance review where he or she has reason to believe there may be a violation of this rule.

Section 36.503 describes the procedures for suits by the Attorney General set out in section 308(b)(1)(B) of the Act. If the Department has reasonable cause to believe that any person or group of persons is engaged in a pattern or practice of resistance to the full enjoyment of any of the rights granted by title III or that any person or group of persons has been denied any of the rights granted by title III and such denial raises an issue of general public importance, the Attorney General may commence a civil action in any appropriate United States district court. The proposed rule provided for suit by the Attorney General ''or his or her designee.'' The reference to a ''designee'' has been omitted in the final rule because it is unnecessary. The Attorney General has delegated enforcement authority under the ADA to the Assistant Attorney General for Civil Rights. 55 FR 40653 (October 4, 1990) (to be codified at 28 CFR 0.50(l).)

Section 36.504 describes the relief that may be granted in a suit by the Attorney General under section 308(b)(2) of the Act. In such an action, the court may grant any equitable relief it considers to be appropriate, including granting temporary, preliminary, or permanent relief, providing an auxiliary aid or service, modification of policy or alternative method, or making facilities readily accessible to and usable by individuals with disabilities, to the extent required by title III. In addition, a court may award such other relief as the court considers to be appropriate, including monetary damages to persons aggrieved, when requested by the Attorney General.

Furthermore, the court may vindicate the public interest by assessing a civil penalty against the covered entity in an amount not exceeding $50,000 for a first violation and not exceeding $100,000 for any subsequent violation. Section 36.504(b) of the rule adopts the standard of section 308(b)(3) of the Act. This section makes it clear that, in counting the number of previous determinations of violations for determining whether a ''first'' or ''subsequent'' violation has occurred, determinations in the same action that the entity has engaged in more than one discriminatory act are to be counted as a single violation. A ''second violation'' would not accrue to that entity until the Attorney General brought another suit against the entity and the entity was again held in violation. Again, all of the violations found in the second suit would be cumulatively considered as a ''subsequent violation.''

Section 36.504(c) clarifies that the terms ''monetary damages'' and ''other relief'' do not include punitive damages. They do include, however, all forms of compensatory damages, including out-of-pocket expenses and damages for pain and suffering.

Section 36.504(a)(3) is based on section 308(b)(2)(C) of the Act, which provides that, ''to vindicate the public interest,'' a court may assess a civil penalty against the entity that has been found to be in violation of the Act in suits brought by the Attorney General. In addition, §36.504(d), which is taken from section 308(b)(5) of the Act, further provides that, in considering what amount of civil penalty, if any, is appropriate, the court shall give consideration to ''any good faith effort or attempt to comply with this part.'' In evaluating such good faith, the court shall consider ''among other factors it

deems relevant, whether the entity could have reasonably anticipated the need for an appropriate type of auxiliary aid needed to accommodate the unique needs of a particular individual with a disability.''

The ''good faith'' standard referred to in this section is not intended to imply a willful or intentional standard—that is, an entity cannot demonstrate good faith simply by showing that it did not willfully, intentionally, or recklessly disregard the law. At the same time, the absence of such a course of conduct would be a factor a court should weigh in determining the existence of good faith.

Section 36.505 states that courts are authorized to award attorneys fees, including litigation expenses and costs, as provided in section 505 of the Act. Litigation expenses include items such as expert witness fees, travel expenses, etc. The Judiciary Committee Report specifies that such items are included under the rubric of ''attorneys fees'' and not ''costs'' so that such expenses will be assessed against a plaintiff only under the standard set forth in *Christiansburg Garment Co.* v. *Equal Employment Opportunity Commission*, 434 U.S. 412 (1978). (Judiciary report at 73.)

Section 36.506 restates section 513 of the Act, which encourages use of alternative means of dispute resolution. Section 36.507 explains that, as provided in section 506(e) of the Act, a public accommodation or other private entity is not excused from compliance with the requirements of this part because of any failure to receive technical assistance.

Section 36.305 Effective Date

In general, title III is effective 18 months after enactment of the Americans with Disabilities Act, i.e., January 26, 1992. However, there are several exceptions to this general rule contained throughout title III. Section 36.508 sets forth all of these exceptions in one place.

Paragraph (b) contains the rule on civil actions. It states that, except with respect to new construction and alterations, no civil action shall be brought for a violation of this part that occurs before July 26, 1992, against businesses with 25 or fewer employees and gross receipts of $1,000,000 or less; and before January 26, 1993, against businesses with 10 or fewer employees and gross receipts of $500,000 or less. In determining what constitutes gross receipts, it is appropriate to exclude amounts collected for sales taxes.

Paragraph (c) concerns transportation services provided by public accommodations not primarily engaged in the business of transporting people. The 18-month effective date applies to all of the transportation provisions except those requiring newly purchased or leased vehicles to be accessible. Vehicles subject to that requirement must be accessible to and usable by individuals with disabilities if the solicitation for the vehicle is made on or after August 26, 1990.

Subpart F—Certification of State Labs or Local Building Codes

Subpart F establishes procedures to implement section 308(b)(1)(A)(ii) of the Act, which provides that, on the application of a State or local government, the Attorney General may certify that a State law or local building code or similar ordinance meets or exceeds the minimum accessibility requirements of the Act. In enforcement proceedings, this certification will constitute rebuttable evidence that the law or code meets or exceeds the ADA's requirements.

Three significant changes, further explained below, were made from the proposed subpart, in response to comments. First, the State or local jurisdiction is required to hold a public hearing on its proposed request for certification and to submit to the Department, as part of the information and materials in support of a request for certification, a transcript of the hearing. Second, the time allowed for interested persons and organizations to comment on the request filed with the Department (§36.605(a)(1)) has been changed from 30 to 60 days. Finally, a new §36.608, Guidance concerning model codes, has been added.

Section 36.601 establishes the definitions to be used for purposes of this subpart. Two of the definitions have been modified, and a definition of ''model code'' has been added. First, in response to a comment, a reference to a code ''or part thereof'' has been added to the definition of ''code.'' The purpose of this addition is to clarify that an entire code need not be submitted if only part of it is relevant to accessibility, or if the jurisdiction seeks certification of only some of the portions that concern accessibility. The Department does not intend to encourage ''piecemeal'' requests for certification by a single jurisdiction. In fact, the Department expects that in some cases, rather than certifying portions of a particular code and refusing to certify others, it may notify a submitting jurisdiction of deficiencies and encourage a reapplication that cures those deficiencies, so that the entire code can be certified eventually. Second, the definition of ''submitting official'' has been modified. The proposed rule defined the submitting official to be the State or local official who has principal responsibility for administration of a code. Commenters pointed out that in some cases more than one code within the same jurisdiction is relevant for purposes of certification. It was also suggested that the Department allow a State to submit a single application on behalf of the State, as well as on behalf of any local jurisdictions required

to follow the State accessibility requirements. Consistent with these comments, the Department has added to the definition language clarifying that the official can be one authorized to submit a code on behalf of a jurisdiction.

A definition of ''model code'' has been added in light of new §36.608.

Most commenters generally approved of the proposed certification process. Some approved of what they saw as the Department's attempt to bring State and local codes into alignment with the ADA. A State agency said that this section will be the backbone of the intergovernmental cooperation essential if the accessibility provisions of the ADA are to be effective.

Some comments disapproved of the proposed process as timeconsuming and laborious for the Department, although some of these comments pointed out that, if the Attorney General certified model codes on which State and local codes are based, many perceived problems would be alleviated. (This point is further addressed by new §36.608.)

Many of the comments received from business organizations, as well as those from some individuals and disability rights groups, addressed the relationship of the ADA requirements and their enforcement, to existing State and local codes and code enforcement systems. These commenters urged the Department to use existing code-making bodies for interpretations of the ADA, and to actively participate in the integration of the ADA into the text of the national model codes that are adopted by State and local enforcement agencies. These issues are discussed in preamble section 36.406 under General comments.

Many commenters urged the Department to evaluate or certify the entire code enforcement system (including any process for hearing appeals from builders of denials by the building code official of requests for variances, waivers, or modifications). Some urged that certification not be allowed in jurisdictions where waivers can be granted, unless there is a clearly identified decision-making process, with written rulings and notice to affected parties of any waiver or modification request. One commenter urged establishment of a dispute resolution mechanism, providing for interpretation (usually through a building official) and an administrative appeals mechanism (generally called Boards of Appeal, Boards of Construction Appeals, or Boards of Review), before certification could be granted.

The Department thoroughly considered these proposals but has declined to provide for certification of processes of enforcement or administration of State and local codes. The statute clearly authorizes the Department to certify the codes themselves for equivalency with the statute; it would be ill-advised for the Department at this point to inquire beyond the face of the code and written interpretations of it. It would be inappropriate to require those jurisdictions that grant waivers or modifications to establish certain procedures before they can apply for certification, or to insist that no deviations can be permitted. In fact, the Department expects that many jurisdictions will allow slight variations from a particular code, consistent with ADAAG itself. ADAAG includes in §2.2 a statement allowing departures from particular requirements where substantially equivalent or greater access and usability is provided. Several sections specifically allow for alternative methods providing equivalent facilitation and, in some cases, provide examples. (See, e.g., section 4.31.9, Text Telephones; section 7.2(2) (iii), Sales and Service Counters.) Section 4.1.6 includes less stringent requirements that are permitted in alterations, in certain circumstances.

However, in an attempt to ensure that it does not certify a code that in practice has been or will be applied in a manner that defeats its equivalency with the ADA, the Department will require that the submitting official include, with the application for certification, any relevant manuals, guides, or any other interpretive information issued that pertain to the code. (§36.603(c)(1).) The requirement that this information be provided is in addition to the NPRM's requirement that the official provide any pertinent formal opinions of the State Attorney General or the chief legal officer of the jurisdiction.

The first step in the certification process is a request for certification, filed by a ''submitting official'' (§36.603). The Department will not accept requests for certification until after January 26, 1992, the effective date of this part. The Department received numerous comments from individuals and organizations representing a variety of interests, urging that the hearing required to be held by the Assistant Attorney General in Washington, DC, after a preliminary determination of equivalency (§36.605(a)(2)), be held within the State or locality requesting certification, in order to facilitate greater participation by all interested parties. While the Department has not modified the requirement that it hold a hearing in Washington, it has added a new subparagraph 36.603(b)(3) requiring a hearing within the State or locality before a request for certification is filed. The hearing must be held after adequate notice to the public and must be on the record; a transcript must be provided with the request for certification. This procedure will insure input from the public at the State or local level and will also insure a Washington, DC, hearing as mentioned in the legislative history.

The request for certification, along with supporting documents (§36.603(c)), must be

filed in duplicate with the office of the Assistant Attorney General for Civil Rights. The Assistant Attorney General may request further information. The request and supporting materials will be available for public examination at the office of the Assistant Attorney General and at the office of the State or local agency charged with administration and enforcement of the code. The submitting official must publish public notice of the request for certification.

Next, under §36.604, the Assistant Attorney General's office will consult with the ATBCB and make a preliminary determination to either (1) find that the code is equivalent (make a ''preliminary determination of equivalency'') or (2) deny certification. The next step depends on which of these preliminary determinations is made.

If the preliminary determination is to find equivalency, the Assistant Attorney General, under §36.605, will inform the submitting official in writing of the preliminary determination and publish a notice in the FEDERAL REGISTER informing the public of the preliminary determination and inviting comment for 60 days. (This time period has been increased from 30 days in light of public comment pointing out the need for more time within which to evaluate the code.) After considering the information received in response to the comments, the Department will hold a hearing in Washington. This hearing will not be subject to the formal requirements of the Administrative Procedure Act. In fact, this requirement could be satisfied by a meeting with interested parties. After the hearing, the Assistant Attorney General's office will consult again with the ATBCB and make a final determination of equivalency or a final determination to deny the request for certification, with a notice of the determination published in the FEDERAL REGISTER.

1If the preliminary determination is to deny certification, there will be no hearing (§36.606). The Department will notify the submitting official of the preliminary determination, and may specify how the code could be modified in order to receive a preliminary determination of equivalency. The Department will allow at least 15 days for the submitting official to submit relevant material in opposition to the preliminary denial. If none is received, no further action will be taken. If more information is received, the Department will consider it and make either a final decision to deny certification or a preliminary determination of equivalency. If at that stage the Assistant Attorney General makes a preliminary determination of equivalency, the hearing procedures set out in §36.605 will be followed.

Section 36.607 addresses the effect of certification. First, certification will only be effective concerning those features or elements that are both (1) covered by the certified code and (2) addressed by the regulations against which they are being certified. For example, if children's facilities are not addressed by the Department's standards, and the building in question is a private elementary school, certification will not be effective for those features of the building to be used by children. And if the Department's regulations addressed equipment but the local code did not, a building's equipment would not be covered by the certification.

In addition, certification will be effective only for the particular edition of the code that is certified. Amendments will not automatically be considered certified, and a submitting official will need to reapply for certification of the changed or additional provisions.

Certification will not be effective in those situations where a State or local building code official allows a facility to be constructed or altered in a manner that does not follow the technical or scoping provisions of the certified code. Thus, if an official either waives an accessible element or feature or allows a change that does not provide equivalent facilitation, the fact that the Department has certified the code itself will not stand as evidence that the facility has been constructed or altered in accordance with the minimum accessibility requirements of the ADA. The Department's certification of a code is effective only with respect to the standards in the code; it is not to be interpreted to apply to a State or local government's application of the code. The fact that the Department has certified a code with provisions concerning waivers, variances, or equivalent facilitation shall not be interpreted as an endorsement of actions taken pursuant to those provisions.

The final rule includes a new §36.608 concerning model codes. It was drafted in response to concerns raised by numerous commenters, many of which have been discussed under General comments (§36.406). It is intended to assist in alleviating the difficulties posed by attempting to certify possibly tens of thousands of codes. It is included in recognition of the fact that many codes are based on, or incorporate, model or consensus standards developed by nationally recognized organizations (e.g., the American National Standards Institute (ANSI); Building Officials and Code Administrators (BOCA) International; Council of American Building Officials (CABO) and its Board for the Coordination of Model Codes (BCMC); Southern Building Code Congress International (SBCCI)). While the Department will not certify or ''precertify'' model codes, as urged by some commenters, it does wish to encourage the continued viability of the consensus and model code process consistent with the purposes of the ADA.

The new section therefore allows an authorized representative of a private entity

responsible for developing a model code to apply to the Assistant Attorney General for review of the code. The review process will be informal and will not be subject to the procedures of §§36.602 through 36.607. The result of the review will take the form of guidance from the Assistant Attorney General as to whether and in what respects the model code is consistent with the ADA's requirements. The guidance will not be binding on any entity or on the Department; it will assist in evaluations of individual State or local codes and may serve as a basis for establishing priorities for consideration of individual codes. The Department anticipates that this approach will foster further cooperation among various government levels, the private entities developing standards, and individuals with disabilities.

[Order No. 1513–91, 56 FR 35592, July 26, 1991, redesignated by AG Order No. 3181–2010, 75 FR 56317, Sept. 15, 2010]

APPENDIX D TO PART 36—1991 STANDARDS FOR ACCESSIBLE DESIGN AS ORIGINALLY PUBLISHED ON JULY 26, 1991

ADA ACCESSIBILITY GUIDELINES FOR BUILDINGS AND FACILITIES TABLE OF CONTENTS

1. PURPOSE **1**

2. GENERAL **1**

2.1 Provisions for Adults 1
2.2 Equivalent Facilitation 1

3. MISCELLANEOUS INSTRUCTIONS AND DEFINITIONS **1**

3.1 Graphic Conventions 1
3.2 Dimensional Tolerances 2
3.3 Notes 2
3.4 General Terminology 2
3.5 Definitions 2

4. ACCESSIBLE ELEMENTS AND SPACES: SCOPE AND TECHNICAL REQUIREMENTS **5**

4.1 Minimum Requirements 5

4.1.1. Application 5
4.1.2. Accessible Sites and Exterior Facilities: New Construction 5
4.1.3. Accessible Buildings: New Construction 7
4.1.4. (Reserved) 10
4.1.5. Accessible Buildings: Additions 10
4.1.6. Accessible Buildings: Alterations 11
4.1.7. Accessible Buildings: Historic Preservation 13

4.2 Space Allowance and Reach Ranges 14
4.3 Accessible Route 15
4.4 Protruding Objects 21
4.5 Ground and Floor Surfaces 22
4.6 Parking and Passenger Loading Zones 24
4.7 Curb Ramps 26
4.8 Ramps 27
4.9 Stairs 30
4.10 Elevators 30

4.11 Platform Lifts (Wheelchair Lifts) 36
4.12 Windows 36
4.13 Doors 36
4.14 Entrances 40
4.15 Drinking Fountains and Water Coolers 40
4.16 Water Closets 40
4.17 Toilet Stalls 41
4.18 Urinals 44
4.19 Lavatories and Mirrors 44
4.20 Bathtubs 45
4.21 Shower Stalls 45
4.22 Toilet Rooms 45
4.23 Bathrooms, Bathing Facilities, and Shower Rooms 48
4.24 Sinks 49
4.25 Storage 49
4.26 Handrails, Grab Bars, and Tub and Shower Seats 50
4.27 Controls and Operating Mechanisms 51
4.28 Alarms 52
4.29 Detectable Warnings 53
4.30 Signage 53
4.31 Telephones 54
4.32 Fixed or Built-in Seating and Tables 56
4.33 Assembly Areas 56
4.34 Automated Teller Machines 58
4.35 Dressing and Fitting Rooms 58

5. RESTAURANTS AND CAFETERIAS. 59

6. MEDICAL CARE FACILITIES 60

7. BUSINESS AND MERCANTILE 61

8. LIBRARIES 62

9. ACCESSIBLE TRANSIENT LODGING 63

10. TRANSPORTATION FACILITIES 67

APPENDIX A1

1. PURPOSE.

This document sets guidelines for accessibility to places of public accommodation and commercial facilities by individuals with disabilities. These guidelines are to be applied during the design, construction, and alteration of such buildings and facilities to the extent required by regulations issued by Federal agencies, including the Department of Justice, under the Americans with Disabilities Act of 1990.

The technical specifications 4.2 through 4.35, of these guidelines are the same as those of the American National Standard Institute's document A117.1-1980, except as noted in this text by italics. However, sections 4.1.1 through 4.1.7 and sections 5 through 10 are different from ANSI A117.1 in their entirety and are printed in standard type.

The illustrations and text of ANSI A117.1 are reproduced with permission from the American National Standards Institute. Copies of the standard may be purchased from the American National Standards Institute at 1430 Broadway, New York, New York 10018.

2. GENERAL.

2.1 Provisions for Adults. *The specifications in these guidelines are based upon adult dimensions and anthropometrics.*

2.2* Equivalent Facilitation. *Departures from particular technical and scoping requirements of this guideline by the use of other designs and technologies are permitted where the alternative designs and technologies used will provide substantially equivalent or greater access to and usability of the facility.*

3. MISCELLANEOUS INSTRUCTIONS AND DEFINITIONS.

3.1 Graphic Conventions. Graphic conventions are shown in Table 1. Dimensions that are not marked minimum or maximum are absolute, unless otherwise indicated in the text or captions.

Table 1
Graphic Conventions

Convention	Description
36 / 915	Typical dimension line showing U.S. customary units (in inches) above the line and SI units (in millimeters) below
9 / 230	Dimensions for short distances indicated on extended line
9 / 230 36 / 915	Dimension line showing alternate dimensions required
	Direction of approach
max	Maximum
min	Minimum
	Boundary of clear floor area
℄	Centerline

1

3.4 General Terminology

3.2 Dimensional Tolerances. All dimensions are subject to conventional building industry tolerances for field conditions.

3.3 Notes. The text of *these guidelines* does not contain notes or footnotes. Additional information, explanations, and advisory materials are located in the Appendix. Paragraphs marked with an asterisk have related, nonmandatory material in the Appendix. In the Appendix, the corresponding paragraph numbers are preceded by an A.

3.4 General Terminology.

comply with. Meet one or more specifications of *these guidelines*.

if, if ... then. Denotes a specification that applies only when the conditions described are present.

may. Denotes an option or alternative.

shall. Denotes a mandatory specification or requirement.

should. Denotes an advisory specification or recommendation.

3.5 Definitions.

Access Aisle. An accessible pedestrian space between elements, such as parking spaces, seating, and desks, that provides clearances appropriate for use of the elements.

Accessible. Describes a site, building, facility, or portion thereof that complies with *these guidelines*.

Accessible Element. An *element* specified by *these guidelines* (for example, telephone, controls, and the like).

Accessible Route. A continuous unobstructed path connecting all accessible elements and spaces of a building or facility. Interior accessible routes may include corridors, floors, ramps, elevators, lifts, and clear floor space at fixtures. Exterior accessible routes may include parking access aisles, curb ramps, *crosswalks at vehicular ways*, walks, ramps, and lifts.

Accessible Space. *Space that complies with these guidelines.*

Adaptability. The ability of certain building spaces and elements, such as kitchen counters, sinks, and grab bars, to be added or altered so as to accommodate the needs of *individuals with or without disabilities* or to accommodate the needs of persons with different types or degrees of disability.

Addition. *An expansion, extension, or increase in the gross floor area of a building or facility.*

Administrative Authority. A governmental agency that adopts or enforces regulations and *guidelines* for the design, construction, or *alteration* of buildings and facilities.

Alteration. *An alteration is a change to a building or facility made by, on behalf of, or for the use of a public accommodation or commercial facility, that affects or could affect the usability of the building or facility or part thereof. Alterations include, but are not limited to, remodeling, renovation, rehabilitation, reconstruction, historic restoration, changes or rearrangement of the structural parts or elements, and changes or rearrangement in the plan configuration of walls and full-height partitions. Normal maintenance, reroofing, painting or wallpapering, or changes to mechanical and electrical systems are not alterations unless they affect the usability of the building or facility.*

Area of Rescue Assistance. *An area, which has direct access to an exit, where people who are unable to use stairs may remain temporarily in safety to await further instructions or assistance during emergency evacuation.*

Assembly Area. A room or space accommodating a *group of* individuals for recreational, educational, political, social, or amusement purposes, or for the consumption of food and drink.

Automatic Door. A door equipped with a power-operated mechanism and controls that open and close the door automatically upon receipt of a momentary actuating signal. The switch that begins the automatic cycle may be a photoelectric device, floor mat, or manual switch (see power-assisted door).

Building. Any structure used and intended for supporting or sheltering any use or occupancy.

Circulation Path. An exterior or interior way of passage from one place to another for pedestrians, including, but not limited to, walks, hallways, courtyards, stairways, and stair landings.

Clear. Unobstructed.

Clear Floor Space. *The minimum unobstructed floor or ground space required to accommodate a single, stationary wheelchair and occupant.*

Closed Circuit Telephone. *A telephone with dedicated line(s) such as a house phone, courtesy phone or phone that must be used to gain entrance to a facility.*

Common Use. Refers to those interior and exterior rooms, spaces, or elements that are made available for the use of a restricted group of people (for example, *occupants of a homeless shelter*, the occupants of an office building, or the guests of such occupants).

Cross Slope. The slope that is perpendicular to the direction of travel (see running slope).

Curb Ramp. A short ramp cutting through a curb or built up to it.

Detectable Warning. *A standardized surface feature built in or applied to walking surfaces or other elements to warn visually impaired people of hazards on a circulation path.*

Dwelling Unit. A single unit which provides a kitchen or food preparation area, in addition to rooms and spaces for living, bathing, sleeping, and the like. *Dwelling units include a single family home or a townhouse used as a transient group home; an apartment building used as a shelter; guestrooms in a hotel that provide sleeping accommodations and food preparation areas; and other similar facilities used on a transient basis. For purposes of these guidelines, use of the term "Dwelling Unit" does not imply the unit is used as a residence.*

Egress, Means of. *A continuous and unobstructed way of exit travel from any point in a building or facility to a public way. A means of egress comprises vertical and horizontal travel and may include intervening room spaces, doorways, hallways, corridors, passageways, balconies, ramps, stairs, enclosures, lobbies, horizontal exits, courts and yards. An accessible means of egress is one that complies with these guidelines and does not include stairs, steps, or escalators. Areas of rescue assistance or evacuation elevators may be included as part of accessible means of egress.*

Element. *An architectural or mechanical component of a building, facility, space, or site, e.g., telephone, curb ramp, door, drinking fountain, seating, or water closet.*

Entrance. *Any access point to a building or portion of a building or facility used for the purpose of entering. An entrance includes the approach walk, the vertical access leading to the entrance platform, the entrance platform itself, vestibules if provided, the entry door(s) or gate(s), and the hardware of the entry door(s) or gate(s).*

Facility. *All or any portion of buildings, structures, site improvements, complexes, equipment, roads, walks, passageways, parking lots, or other real or personal property located on a site.*

Ground Floor. *Any occupiable floor less than one story above or below grade with direct access to grade. A building or facility always has at least one ground floor and may have more than one ground floor as where a split level entrance has been provided or where a building is built into a hillside.*

Mezzanine or Mezzanine Floor. *That portion of a story which is an intermediate floor level placed within the story and having occupiable space above and below its floor.*

Marked Crossing. A crosswalk or other identified path intended for pedestrian use in crossing a vehicular way.

Multifamily Dwelling. Any building containing more than two dwelling units.

Occupiable. *A room or enclosed space designed for human occupancy in which individuals congregate for amusement, educational or similar purposes, or in which occupants are engaged at labor, and which is equipped with means of egress, light, and ventilation.*

3.5 Definitions

Operable Part. A part of a piece of equipment or appliance used to insert or withdraw objects, or to activate, deactivate, or adjust the equipment or appliance (for example, coin slot, pushbutton, handle).

Path of Travel. *(Reserved).*

Power-assisted Door. A door used *for human passage* with a mechanism that helps to open the door, or relieves the opening resistance of a door, upon the activation of a switch or a continued force applied to the door itself.

Public Use. Describes interior or exterior rooms or spaces that are made available to the general public. Public use may be provided at a building or facility that is privately or publicly owned.

Ramp. A walking surface which has a running slope greater than 1:20.

Running Slope. The slope that is parallel to the direction of travel (see cross slope).

Service Entrance. An entrance intended primarily for delivery of goods or services.

Signage. *Displayed* verbal, symbolic, *tactile,* and pictorial information.

Site. A parcel of land bounded by a property line or a designated portion of a public right-of-way.

Site Improvement. Landscaping, paving for pedestrian and vehicular ways, outdoor lighting, recreational facilities, and the like, added to a site.

Sleeping Accommodations. Rooms in which people sleep; for example, dormitory and hotel or motel guest rooms or suites.

Space. *A definable area, e.g., room, toilet room, hall, assembly area, entrance, storage room, alcove, courtyard, or lobby.*

Story. *That portion of a building included between the upper surface of a floor and upper surface of the floor or roof next above. If such portion of a building does not include occupiable space, it is not considered a story for purposes of these guidelines. There may be more than one floor level within a story as in the case of a mezzanine or mezzanines.*

Structural Frame. The structural frame shall be considered to be the columns and the girders, beams, trusses and spandrels having direct connections to the columns and all other members which are essential to the stability of the building as a whole.

Tactile. Describes an object that can be perceived using the sense of touch.

Text Telephone. *Machinery or equipment that employs interactive graphic (i.e., typed) communications through the transmission of coded signals across the standard telephone network. Text telephones can include, for example, devices known as TDD's (telecommunication display devices or telecommunication devices for deaf persons) or computers.*

Transient Lodging. *A building, facility, or portion thereof, excluding inpatient medical care facilities, that contains one or more dwelling units or sleeping accommodations. Transient lodging may include, but is not limited to, resorts, group homes, hotels, motels, and dormitories.*

Vehicular Way. A route intended for vehicular traffic, such as a street, driveway, or parking lot.

Walk. An exterior pathway with a prepared surface intended for pedestrian use, including general pedestrian areas such as plazas and courts.

NOTE: Sections 4.1.1 through 4.1.7 are different from ANSI A117.1 in their entirety and are printed in standard type (ANSI A117.1 does not include scoping provisions).

4. ACCESSIBLE ELEMENTS AND SPACES: SCOPE AND TECHNICAL REQUIREMENTS.

4.1 Minimum Requirements

4.1.1* Application.

(1) General. All areas of newly designed or newly constructed buildings and facilities required to be accessible by 4.1.2 and 4.1.3 and altered portions of existing buildings and facilities required to be accessible by 4.1.6 shall comply with these guidelines, 4.1 through 4.35, unless otherwise provided in this section or as modified in a special application section.

(2) Application Based on Building Use. Special application sections 5 through 10 provide additional requirements for restaurants and cafeterias, medical care facilities, business and mercantile, libraries, accessible transient lodging, and transportation facilities. When a building or facility contains more than one use covered by a special application section, each portion shall comply with the requirements for that use.

(3)* Areas Used Only by Employees as Work Areas. Areas that are used only as work areas shall be designed and constructed so that individuals with disabilities can approach, enter, and exit the areas. These guidelines do not require that any areas used only as work areas be constructed to permit maneuvering within the work area or be constructed or equipped (i.e., with racks or shelves) to be accessible.

(4) Temporary Structures. These guidelines cover temporary buildings or facilities as well as permanent facilities. Temporary buildings and facilities are not of permanent construction but are extensively used or are essential for public use for a period of time. Examples of temporary buildings or facilities covered by these guidelines include, but are not limited to: reviewing stands, temporary classrooms, bleacher areas, exhibit areas, temporary banking facilities, temporary health screening services, or temporary safe pedestrian passageways around a construction site. Structures, sites and equipment directly associated with the actual processes of construction, such as scaffolding, bridging, materials hoists, or construction trailers are not included.

(5) General Exceptions.

(a) In new construction, a person or entity is not required to meet fully the requirements of these guidelines where that person or entity can demonstrate that it is structurally impracticable to do so. Full compliance will be considered structurally impracticable only in those rare circumstances when the unique characteristics of terrain prevent the incorporation of accessibility features. If full compliance with the requirements of these guidelines is structurally impracticable, a person or entity shall comply with the requirements to the extent it is not structurally impracticable. Any portion of the building or facility which can be made accessible shall comply to the extent that it is not structurally impracticable.

(b) Accessibility is not required to (i) observation galleries used primarily for security purposes; or (ii) in non-occupiable spaces accessed only by ladders, catwalks, crawl spaces, very narrow passageways, or freight (non-passenger) elevators, and frequented only by service personnel for repair purposes; such spaces include, but are not limited to, elevator pits, elevator penthouses, piping or equipment catwalks.

4.1.2 Accessible Sites and Exterior Facilities: New Construction. An accessible site shall meet the following minimum requirements:

(1) At least one accessible route complying with 4.3 shall be provided within the boundary of the site from public transportation stops, accessible parking spaces, passenger loading zones if provided, and public streets or sidewalks, to an accessible building entrance.

(2) At least one accessible route complying with 4.3 shall connect accessible buildings, accessible facilities, accessible elements, and accessible spaces that are on the same site.

(3) All objects that protrude from surfaces or posts into circulation paths shall comply with 4.4.

4.1.2 Accessible Sites and Exterior Facilities: New Construction

(4) Ground surfaces along accessible routes and in accessible spaces shall comply with 4.5.

(5) (a) If parking spaces are provided for self-parking by employees or visitors, or both, then accessible spaces complying with 4.6 shall be provided in each such parking area in conformance with the table below. Spaces required by the table need not be provided in the particular lot. They may be provided in a different location if equivalent or greater accessibility, in terms of distance from an accessible entrance, cost and convenience is ensured.

Total Parking in Lot	Required Minimum Number of Accessible Spaces
1 to 25	1
26 to 50	2
51 to 75	3
76 to 100	4
101 to 150	5
151 to 200	6
201 to 300	7
301 to 400	8
401 to 500	9
501 to 1000	2 percent of total
1001 and over	20 plus 1 for each 100 over 1000

Except as provided in (b), access aisles adjacent to accessible spaces shall be 60 in (1525 mm) wide minimum.

(b) One in every eight accessible spaces, but not less than one, shall be served by an access aisle 96 in (2440 mm) wide minimum and shall be designated "van accessible" as required by 4.6.4. The vertical clearance at such spaces shall comply with 4.6.5. All such spaces may be grouped on one level of a parking structure.

EXCEPTION: Provision of all required parking spaces in conformance with "Universal Parking Design" (see appendix A4.6.3) is permitted.

(c) If passenger loading zones are provided, then at least one passenger loading zone shall comply with 4.6.6.

(d) At facilities providing medical care and other services for persons with mobility impairments, parking spaces complying with 4.6 shall be provided in accordance with 4.1.2(5)(a) except as follows:

(i) Outpatient units and facilities: 10 percent of the total number of parking spaces provided serving each such outpatient unit or facility;

(ii) Units and facilities that specialize in treatment or services for persons with mobility impairments: 20 percent of the total number of parking spaces provided serving each such unit or facility.

(e)*Valet parking: Valet parking facilities shall provide a passenger loading zone complying with 4.6.6 located on an accessible route to the entrance of the facility. Paragraphs 5(a), 5(b), and 5(d) of this section do not apply to valet parking facilities.

(6) If toilet facilities are provided on a site, then each such public or common use toilet facility shall comply with 4.22. If bathing facilities are provided on a site, then each such public or common use bathing facility shall comply with 4.23.

For single user portable toilet or bathing units clustered at a single location, at least 5% but no less than one toilet unit or bathing unit complying with 4.22 or 4.23 shall be installed at each cluster whenever typical inaccessible units are provided. Accessible units shall be identified by the International Symbol of Accessibility.

EXCEPTION: Portable toilet units at construction sites used exclusively by construction personnel are not required to comply with 4.1.2(6).

(7) Building Signage. Signs which designate permanent rooms and spaces shall comply with 4.30.1, 4.30.4, 4.30.5 and 4.30.6. Other signs which provide direction to, or information about, functional spaces of the building shall comply with 4.30.1, 4.30.2, 4.30.3, and 4.30.5. Elements and spaces of accessible facilities which shall be identified by the International Symbol of Accessibility and which shall comply with 4.30.7 are:

(a) Parking spaces designated as reserved for individuals with disabilities;

(b) Accessible passenger loading zones;

(c) Accessible entrances when not all are accessible (inaccessible entrances shall have directional signage to indicate the route to the nearest accessible entrance);

(d) Accessible toilet and bathing facilities when not all are accessible.

4.1.3 Accessible Buildings: New Construction. Accessible buildings and facilities shall meet the following minimum requirements:

(1) At least one accessible route complying with 4.3 shall connect accessible building or facility entrances with all accessible spaces and elements within the building or facility.

(2) All objects that overhang or protrude into circulation paths shall comply with 4.4.

(3) Ground and floor surfaces along accessible routes and in accessible rooms and spaces shall comply with 4.5.

(4) Interior and exterior stairs connecting levels that are not connected by an elevator, ramp, or other accessible means of vertical access shall comply with 4.9.

(5)* One passenger elevator complying with 4.10 shall serve each level, including mezzanines, in all multi-story buildings and facilities unless exempted below. If more than one elevator is provided, each full passenger elevator shall comply with 4.10.

EXCEPTION 1: Elevators are not required in facilities that are less than three stories or that have less than 3000 square feet per story unless the building is a shopping center, a shopping mall, or the professional office of a health care provider, or another type of facility as determined by the Attorney General. The elevator exemption set forth in this paragraph does not obviate or limit in any way the obligation to comply with the other accessibility requirements established in section 4.1.3. For example, floors above or below the accessible ground floor must meet the requirements of this section except for elevator service. If toilet or bathing facilities are provided on a level not served by an elevator, then toilet or bathing facilities must be provided on the accessible ground floor. In new construction if a building or facility is eligible for this exemption but a full passenger elevator is nonetheless planned, that elevator shall meet the requirements of 4.10 and shall serve each level in the building. A full passenger elevator that provides service from a garage to only one level of a building or facility is not required to serve other levels.

EXCEPTION 2: Elevator pits, elevator penthouses, mechanical rooms, piping or equipment catwalks are exempted from this requirement.

EXCEPTION 3: Accessible ramps complying with 4.8 may be used in lieu of an elevator.

EXCEPTION 4: Platform lifts (wheelchair lifts) complying with 4.11 of this guideline and applicable state or local codes may be used in lieu of an elevator only under the following conditions:

(a) To provide an accessible route to a performing area in an assembly occupancy.

(b) To comply with the wheelchair viewing position line-of-sight and dispersion requirements of 4.33.3.

(c) To provide access to incidental occupiable spaces and rooms which are not open to the general public and which house no more than five persons, including but not limited to equipment control rooms and projection booths.

(d) To provide access where existing site constraints or other constraints make use of a ramp or an elevator infeasible.

(6) Windows: (Reserved).

(7) Doors:

(a) At each accessible entrance to a building or facility, at least one door shall comply with 4.13.

(b) Within a building or facility, at least one door at each accessible space shall comply with 4.13.

(c) Each door that is an element of an accessible route shall comply with 4.13.

4.1.3 Accessible Buildings: New Construction

(d) Each door required by 4.3.10, Egress, shall comply with 4.13.

(8) In new construction, at a minimum, the requirements in (a) and (b) below shall be satisfied independently:

(a)(i) At least 50% of all public entrances (excluding those in (b) below) must be accessible. At least one must be a ground floor entrance. Public entrances are any entrances that are not loading or service entrances.

(ii) Accessible entrances must be provided in a number at least equivalent to the number of exits required by the applicable building/fire codes. (This paragraph does not require an increase in the total number of entrances planned for a facility.)

(iii) An accessible entrance must be provided to each tenancy in a facility (for example, individual stores in a strip shopping center).

One entrance may be considered as meeting more than one of the requirements in (a). Where feasible, accessible entrances shall be the entrances used by the majority of people visiting or working in the building.

(b)(i) In addition, if direct access is provided for pedestrians from an enclosed parking garage to the building, at least one direct entrance from the garage to the building must be accessible.

(ii) If access is provided for pedestrians from a pedestrian tunnel or elevated walkway, one entrance to the building from each tunnel or walkway must be accessible.

One entrance may be considered as meeting more than one of the requirements in (b).

Because entrances also serve as emergency exits whose proximity to all parts of buildings and facilities is essential, it is preferable that all entrances be accessible.

(c) If the only entrance to a building, or tenancy in a facility, is a service entrance, that entrance shall be accessible.

(d) Entrances which are not accessible shall have directional signage complying with 4.30.1, 4.30.2, 4.30.3, and 4.30.5, which indicates the location of the nearest accessible entrance.

(9)* In buildings or facilities, or portions of buildings or facilities, required to be accessible, accessible means of egress shall be provided in the same number as required for exits by local building/life safety regulations. Where a required exit from an occupiable level above or below a level of accessible exit discharge is not accessible, an area of rescue assistance shall be provided on each such level (in a number equal to that of inaccessible required exits). Areas of rescue assistance shall comply with 4.3.11. A horizontal exit, meeting the requirements of local building/life safety regulations, shall satisfy the requirement for an area of rescue assistance.

EXCEPTION: Areas of rescue assistance are not required in buildings or facilities having a supervised automatic sprinkler system.

(10)* Drinking Fountains:

(a) Where only one drinking fountain is provided on a floor there shall be a drinking fountain which is accessible to individuals who use wheelchairs in accordance with 4.15 and one accessible to those who have difficulty bending or stooping. (This can be accommodated by the use of a "hi-lo" fountain; by providing one fountain accessible to those who use wheelchairs and one fountain at a standard height convenient for those who have difficulty bending; by providing a fountain accessible under 4.15 and a water cooler; or by such other means as would achieve the required accessibility for each group on each floor.)

(b) Where more than one drinking fountain or water cooler is provided on a floor, 50% of those provided shall comply with 4.15 and shall be on an accessible route.

(11) Toilet Facilities: If toilet rooms are provided, then each public and common use toilet room shall comply with 4.22. Other toilet rooms provided for the use of occupants of specific spaces (i.e., a private toilet room for the occupant of a private office) shall be adaptable. If bathing rooms are provided, then each public and common use bathroom shall comply with 4.23. Accessible toilet rooms and bathing facilities shall be on an accessible route.

(12) Storage, Shelving and Display Units:

(a) If fixed or built-in storage facilities such as cabinets, shelves, closets, and drawers are provided in accessible spaces, at least one of each type provided shall contain storage space complying with 4.25. Additional storage may be provided outside of the dimensions required by 4.25.

(b) Shelves or display units allowing self-service by customers in mercantile occupancies shall be located on an accessible route complying with 4.3. Requirements for accessible reach range do not apply.

(13) Controls and operating mechanisms in accessible spaces, along accessible routes, or as parts of accessible elements (for example, light switches and dispenser controls) shall comply with 4.27.

(14) If emergency warning systems are provided, then they shall include both audible alarms and visual alarms complying with 4.28. Sleeping accommodations required to comply with 9.3 shall have an alarm system complying with 4.28. Emergency warning systems in medical care facilities may be modified to suit standard health care alarm design practice.

(15) Detectable warnings shall be provided at locations as specified in 4.29.

(16) Building Signage:

(a) Signs which designate permanent rooms and spaces shall comply with 4.30.1, 4.30.4, 4.30.5 and 4.30.6.

(b) Other signs which provide direction to or information about functional spaces of the building shall comply with 4.30.1, 4.30.2, 4.30.3, and 4.30.5.

EXCEPTION: Building directories, menus, and all other signs which are temporary are not required to comply.

(17) Public Telephones:

(a) If public pay telephones, public closed circuit telephones, or other public telephones are provided, then they shall comply with 4.31.2 through 4.31.8 to the extent required by the following table:

Number of each type of telephone provided on each floor	Number of telephones required to comply with 4.31.2 through 4.31.8[1]
1 or more single unit	1 per floor
1 bank[2]	1 per floor
2 or more banks[2]	1 per bank. Accessible unit may be installed as a single unit in proximity (either visible or with signage) to the bank. At least one public telephone per floor shall meet the requirements for a forward reach telephone[3].

[1] Additional public telephones may be installed at any height. Unless otherwise specified, accessible telephones may be either forward or side reach telephones.

[2] A bank consists of two or more adjacent public telephones, often installed as a unit.

[3] EXCEPTION: For exterior installations only, if dial tone first service is available, then a side reach telephone may be installed instead of the required forward reach telephone (i.e., one telephone in proximity to each bank shall comply with 4.31).

(b)* All telephones required to be accessible and complying with 4.31.2 through 4.31.8 shall be equipped with a volume control. In addition, 25 percent, but never less than one, of all other public telephones provided shall be equipped with a volume control and shall be dispersed among all types of public telephones, including closed circuit telephones, throughout the building or facility. Signage complying with applicable provisions of 4.30.7 shall be provided.

(c) The following shall be provided in accordance with 4.31.9:

(i) if a total number of four or more public pay telephones (including both interior and exterior phones) is provided at a site, and at least one is in an interior location, then at least one interior public text telephone shall be provided.

(ii) if an interior public pay telephone is provided in a stadium or arena, in a convention center, in a hotel with a convention center, or

4.1.3 Accessible Buildings: New Construction

in a covered mall, at least one interior public text telephone shall be provided in the facility.

(iii) if a public pay telephone is located in or adjacent to a hospital emergency room, hospital recovery room, or hospital waiting room, one public text telephone shall be provided at each such location.

(d) Where a bank of telephones in the interior of a building consists of three or more public pay telephones, at least one public pay telephone in each such bank shall be equipped with a shelf and outlet in compliance with 4.31.9(2).

(18) If fixed or built-in seating or tables (including, but not limited to, study carrels and student laboratory stations), are provided in accessible public or common use areas, at least five percent (5%), but not less than one, of the fixed or built-in seating areas or tables shall comply with 4.32. An accessible route shall lead to and through such fixed or built-in seating areas, or tables.

(19)* Assembly areas:

(a) in places of assembly with fixed seating accessible wheelchair locations shall comply with 4.33.2, 4.33.3, and 4.33.4 and shall be provided consistent with the following table:

Capacity of Seating in Assembly Areas	Number of Required Wheelchair Locations
4 to 25	1
26 to 50	2
51 to 300	4
301 to 500	6
over 500	6, plus 1 additional space for each total seating capacity increase of 100

In addition, one percent, but not less than one, of all fixed seats shall be aisle seats with no armrests on the aisle side, or removable or folding armrests on the aisle side. Each such seat shall be identified by a sign or marker. Signage notifying patrons of the availability of such seats shall be posted at the ticket office. Aisle seats are not required to comply with 4.33.4.

(b) This paragraph applies to assembly areas where audible communications are integral to the use of the space (e.g., concert and lecture halls, playhouses and movie theaters, meeting rooms, etc.). Such assembly areas, if (1) they accommodate at least 50 persons, or if they have audio-amplification systems, and (2) they have fixed seating, shall have a permanently installed assistive listening system complying with 4.33. For other assembly areas, a permanently installed assistive listening system, or an adequate number of electrical outlets or other supplementary wiring necessary to support a portable assistive listening system shall be provided. The minimum number of receivers to be provided shall be equal to 4 percent of the total number of seats, but in no case less than two. Signage complying with applicable provisions of 4.30 shall be installed to notify patrons of the availability of a listening system.

(20) Where automated teller machines are provided, each machine shall comply with the requirements of 4.34 except where two or more machines are provided at a location, then only one must comply.

EXCEPTION: Drive-up-only automated teller machines are not required to comply with 4.34.2 and 4.34.3.

(21) Where dressing and fitting rooms are provided for use by the general public, patients, customers or employees, 5 percent, but never less than one, of dressing rooms for each type of use in each cluster of dressing rooms shall be accessible and shall comply with 4.35.

Examples of types of dressing rooms are those serving different genders or distinct and different functions as in different treatment or examination facilities.

4.1.4 (Reserved).

4.1.5 Accessible Buildings: Additions. Each addition to an existing building or facility shall be regarded as an alteration. Each space or element added to the existing building or facility shall comply with the applicable provisions of 4.1.1 to 4.1.3, Minimum Requirements (for New Construction) and the applicable technical specifications of 4.2 through 4.35 and sections 5 through 10. Each addition that

affects or could affect the usability of an area containing a primary function shall comply with 4.1.6(2).

4.1.6 Accessible Buildings: Alterations.

(1) General. Alterations to existing buildings and facilities shall comply with the following:

(a) No alteration shall be undertaken which decreases or has the effect of decreasing accessibility or usability of a building or facility below the requirements for new construction at the time of alteration.

(b) If existing elements, spaces, or common areas are altered, then each such altered element, space, feature, or area shall comply with the applicable provisions of 4.1.1 to 4.1.3 Minimum Requirements (for New Construction). If the applicable provision for new construction requires that an element, space, or common area be on an accessible route, the altered element, space, or common area is not required to be on an accessible route except as provided in 4.1.6(2) (Alterations to an Area Containing a Primary Function.)

(c) If alterations of single elements, when considered together, amount to an alteration of a room or space in a building or facility, the entire space shall be made accessible.

(d) No alteration of an existing element, space, or area of a building or facility shall impose a requirement for greater accessibility than that which would be required for new construction. For example, if the elevators and stairs in a building are being altered and the elevators are, in turn, being made accessible, then no accessibility modifications are required to the stairs connecting levels connected by the elevator. If stair modifications to correct unsafe conditions are required by other codes, the modifications shall be done in compliance with these guidelines unless technically infeasible.

(e) At least one interior public text telephone complying with 4.31.9 shall be provided if:

(i) alterations to existing buildings or facilities with less than four exterior or interior public pay telephones would increase the total number to four or more telephones with at least one in an interior location; or

(ii) alterations to one or more exterior or interior public pay telephones occur in an existing building or facility with four or more public telephones with at least one in an interior location.

(f) If an escalator or stair is planned or installed where none existed previously and major structural modifications are necessary for such installation, then a means of accessible vertical access shall be provided that complies with the applicable provisions of 4.7, 4.8, 4.10, or 4.11.

(g) In alterations, the requirements of 4.1.3(9), 4.3.10 and 4.3.11 do not apply.

(h)*Entrances: If a planned alteration entails alterations to an entrance, and the building has an accessible entrance, the entrance being altered is not required to comply with 4.1.3(8), except to the extent required by 4.1.6(2). If a particular entrance is not made accessible, appropriate accessible signage indicating the location of the nearest accessible entrance(s) shall be installed at or near the inaccessible entrance, such that a person with disabilities will not be required to retrace the approach route from the inaccessible entrance.

(i) If the alteration work is limited solely to the electrical, mechanical, or plumbing system, or to hazardous material abatement, or automatic sprinkler retrofitting, and does not involve the alteration of any elements or spaces required to be accessible under these guidelines, then 4.1.6(2) does not apply.

(j) EXCEPTION: In alteration work, if compliance with 4.1.6 is technically infeasible, the alteration shall provide accessibility to the maximum extent feasible. Any elements or features of the building or facility that are being altered and can be made accessible shall be made accessible within the scope of the alteration.

Technically Infeasible. Means, with respect to an alteration of a building or a facility, that it has little likelihood of being accomplished because existing structural conditions would require removing or altering a load-bearing member which is an essential part of the structural frame; or because other existing physical or site constraints prohibit modification or

4.1.6 Accessible Buildings: Alterations

addition of elements, spaces, or features which are in full and strict compliance with the minimum requirements for new construction and which are necessary to provide accessibility.

(k) EXCEPTION:

(i) These guidelines do not require the installation of an elevator in an altered facility that is less than three stories or has less than 3,000 square feet per story unless the building is a shopping center, a shopping mall, the professional office of a health care provider, or another type of facility as determined by the Attorney General.

(ii) The exemption provided in paragraph (i) does not obviate or limit in any way the obligation to comply with the other accessibility requirements established in these guidelines. For example, alterations to floors above or below the ground floor must be accessible regardless of whether the altered facility has an elevator. If a facility subject to the elevator exemption set forth in paragraph (i) nonetheless has a full passenger elevator, that elevator shall meet, to the maximum extent feasible, the accessibility requirements of these guidelines.

(2) Alterations to an Area Containing a Primary Function: In addition to the requirements of 4.1.6(1), an alteration that affects or could affect the usability of or access to an area containing a primary function shall be made so as to ensure that, to the maximum extent feasible, the path of travel to the altered area and the restrooms, telephones, and drinking fountains serving the altered area, are readily accessible to and usable by individuals with disabilities, unless such alterations are disproportionate to the overall alterations in terms of cost and scope (as determined under criteria established by the Attorney General).

(3) Special Technical Provisions for Alterations to Existing Buildings and Facilities:

(a) Ramps: Curb ramps and interior or exterior ramps to be constructed on sites or in existing buildings or facilities where space limitations prohibit the use of a 1:12 slope or less may have slopes and rises as follows:

(i) A slope between 1:10 and 1:12 is allowed for a maximum rise of 6 inches.

(ii) A slope between 1:8 and 1:10 is allowed for a maximum rise of 3 inches. A slope steeper than 1:8 is not allowed.

(b) Stairs: Full extension of handrails at stairs shall not be required in alterations where such extensions would be hazardous or impossible due to plan configuration.

(c) Elevators:

(i) If safety door edges are provided in existing automatic elevators, automatic door reopening devices may be omitted (see 4.10.6).

(ii) Where existing shaft configuration or technical infeasibility prohibits strict compliance with 4.10.9, the minimum car plan dimensions may be reduced by the minimum amount necessary, but in no case shall the inside car area be smaller than 48 in by 48 in.

(iii) Equivalent facilitation may be provided with an elevator car of different dimensions when usability can be demonstrated and when all other elements required to be accessible comply with the applicable provisions of 4.10. For example, an elevator of 47 in by 69 in (1195 mm by 1755 mm) with a door opening on the narrow dimension, could accommodate the standard wheelchair clearances shown in Figure 4.

(d) Doors:

(i) Where it is technically infeasible to comply with clear opening width requirements of 4.13.5, a projection of 5/8 in maximum will be permitted for the latch side stop.

(ii) If existing thresholds are 3/4 in high or less, and have (or are modified to have) a beveled edge on each side, they may remain.

(e) Toilet Rooms:

(i) Where it is technically infeasible to comply with 4.22 or 4.23, the installation of at least one unisex toilet/bathroom per floor, located in the same area as existing toilet facilities, will be permitted in lieu of modifying existing toilet facilities to be accessible. Each unisex toilet room shall contain one water closet complying with 4.16 and one lavatory complying with 4.19, and the door shall have a privacy latch.

(ii) Where it is technically infeasible to install a required standard stall (Fig. 30(a)), or where other codes prohibit reduction of the fixture count (i.e., removal of a water closet in order to create a double-wide stall), either alternate stall (Fig.30(b)) may be provided in lieu of the standard stall.

(iii) When existing toilet or bathing facilities are being altered and are not made accessible, signage complying with 4.30.1, 4.30.2, 4.30.3, 4.30.5, and 4.30.7 shall be provided indicating the location of the nearest accessible toilet or bathing facility within the facility.

(f) Assembly Areas:

(i) Where it is technically infeasible to disperse accessible seating throughout an altered assembly area, accessible seating areas may be clustered. Each accessible seating area shall have provisions for companion seating and shall be located on an accessible route that also serves as a means of emergency egress.

(ii) Where it is technically infeasible to alter all performing areas to be on an accessible route, at least one of each type of performing area shall be made accessible.

(g) Platform Lifts (Wheelchair Lifts): In alterations, platform lifts (wheelchair lifts) complying with 4.11 and applicable state or local codes may be used as part of an accessible route. The use of lifts is not limited to the four conditions in exception 4 of 4.1.3(5).

(h) Dressing Rooms: In alterations where technical infeasibility can be demonstrated, one dressing room for each sex on each level shall be made accessible. Where only unisex dressing rooms are provided, accessible unisex dressing rooms may be used to fulfill this requirement.

4.1.7 Accessible Buildings: Historic Preservation.

(1) Applicability:

(a) General Rule. Alterations to a qualified historic building or facility shall comply with 4.1.6 Accessible Buildings: Alterations, the applicable technical specifications of 4.2 through 4.35 and the applicable special application sections 5 through 10 unless it is determined in accordance with the procedures in 4.1.7(2) that compliance with the requirements for accessible routes (exterior and interior), ramps, entrances, or toilets would threaten or destroy the historic significance of the building or facility in which case the alternative requirements in 4.1.7(3) may be used for the feature.

EXCEPTION: (Reserved).

(b) Definition. A qualified historic building or facility is a building or facility that is:

(i) Listed in or eligible for listing in the National Register of Historic Places; or

(ii) Designated as historic under an appropriate State or local law.

(2) Procedures:

(a) Alterations to Qualified Historic Buildings and Facilities Subject to Section 106 of the National Historic Preservation Act:

(i) Section 106 Process. Section 106 of the National Historic Preservation Act (16 U.S.C. 470 f) requires that a Federal agency with jurisdiction over a Federal, federally assisted, or federally licensed undertaking consider the effects of the agency's undertaking on buildings and facilities listed in or eligible for listing in the National Register of Historic Places and give the Advisory Council on Historic Preservation a reasonable opportunity to comment on the undertaking prior to approval of the undertaking.

(ii) ADA Application. Where alterations are undertaken to a qualified historic building or facility that is subject to section 106 of the National Historic Preservation Act, the Federal agency with jurisdiction over the undertaking shall follow the section 106 process. If the State Historic Preservation Officer or Advisory Council on Historic Preservation agrees that compliance with the requirements for accessible routes (exterior and interior), ramps, entrances, or toilets would threaten or destroy the historic significance of the building or facility, the alternative requirements in 4.1.7(3) may be used for the feature.

4.2 Space Allowance and Reach Ranges

(b) Alterations to Qualified Historic Buildings and Facilities Not Subject to Section 106 of the National Historic Preservation Act. Where alterations are undertaken to a qualified historic building or facility that is not subject to section 106 of the National Historic Preservation Act, if the entity undertaking the alterations believes that compliance with the requirements for accessible routes (exterior and interior), ramps, entrances, or toilets would threaten or destroy the historic significance of the building or facility and that the alternative requirements in 4.1.7(3) should be used for the feature, the entity should consult with the State Historic Preservation Officer. If the State Historic Preservation Officer agrees that compliance with the accessibility requirements for accessible routes (exterior and interior), ramps, entrances or toilets would threaten or destroy the historical significance of the building or facility, the alternative requirements in 4.1.7(3) may be used.

(c) Consultation With Interested Persons. Interested persons should be invited to participate in the consultation process, including State or local accessibility officials, individuals with disabilities, and organizations representing individuals with disabilities.

(d) Certified Local Government Historic Preservation Programs. Where the State Historic Preservation Officer has delegated the consultation responsibility for purposes of this section to a local government historic preservation program that has been certified in accordance with section 101(c) of the National Historic Preservation Act of 1966 (16 U.S.C. 470a (c)) and implementing regulations (36 CFR 61.5), the responsibility may be carried out by the appropriate local government body or official.

(3) Historic Preservation: Minimum Requirements:

(a) At least one accessible route complying with 4.3 from a site access point to an accessible entrance shall be provided.

EXCEPTION: A ramp with a slope no greater than 1:6 for a run not to exceed 2 ft (610 mm) may be used as part of an accessible route to an entrance.

(b) At least one accessible entrance complying with 4.14 which is used by the public shall be provided.

EXCEPTION: If it is determined that no entrance used by the public can comply with 4.14, then access at any entrance not used by the general public but open (unlocked) with directional signage at the primary entrance may be used. The accessible entrance shall also have a notification system. Where security is a problem, remote monitoring may be used.

(c) If toilets are provided, then at least one toilet facility complying with 4.22 and 4.1.6 shall be provided along an accessible route that complies with 4.3. Such toilet facility may be unisex in design.

(d) Accessible routes from an accessible entrance to all publicly used spaces on at least the level of the accessible entrance shall be provided. Access shall be provided to all levels of a building or facility in compliance with 4.1 whenever practical.

(e) Displays and written information, documents, etc., should be located where they can be seen by a seated person. Exhibits and signage displayed horizontally (e.g., open books), should be no higher than 44 in (1120 mm) above the floor surface.

NOTE: The technical provisions of sections 4.2 through 4.35 are the same as those of the American National Standard Institute's document A117.1-1980, except as noted in the text.

4.2 Space Allowance and Reach Ranges.

4.2.1* Wheelchair Passage Width. The minimum clear width for single wheelchair passage shall be 32 in (815 mm) at a point and 36 in (915 mm) continuously (see Fig. 1 and 24(e)).

4.2.2 Width for Wheelchair Passing. The minimum width for two wheelchairs to pass is 60 in (1525 mm) (see Fig. 2).

4.2.3* Wheelchair Turning Space. The space required for a wheelchair to make a 180-degree turn is a clear space of 60 in (1525 mm)

4.2.4* Clear Floor or Ground Space for Wheelchairs

diameter (see Fig. 3(a)) or a T-shaped space (see Fig. 3(b)).

4.2.4* Clear Floor or Ground Space for Wheelchairs.

4.2.4.1 Size and Approach. The minimum clear floor or ground space required to accommodate a single, stationary wheelchair and occupant is 30 in by 48 in (760 mm by 1220 mm) (see Fig. 4(a)). The minimum clear floor or ground space for wheelchairs may be positioned for forward or parallel approach to an object (see Fig. 4(b) and (c)). Clear floor or ground space for wheelchairs may be part of the knee space required under some objects.

4.2.4.2 Relationship of Maneuvering Clearance to Wheelchair Spaces. One full unobstructed side of the clear floor or ground space for a wheelchair shall adjoin or overlap an accessible route or adjoin another wheelchair clear floor space. If a clear floor space is located in an alcove or otherwise confined on all or part of three sides, additional maneuvering clearances shall be provided as shown in Fig. 4(d) and (e).

4.2.4.3 Surfaces for Wheelchair Spaces. Clear floor or ground spaces for wheelchairs shall comply with 4.5.

4.2.5* Forward Reach. If the clear floor space only allows forward approach to an object, the maximum high forward reach allowed shall be 48 in (1220 mm) (see Fig. 5(a)). *The minimum low forward reach is 15 in (380 mm).* If the high forward reach is over an obstruction, reach and clearances shall be as shown in Fig. 5(b).

4.2.6* Side Reach. If the clear floor space allows parallel approach by a person in a wheelchair, the maximum high side reach allowed shall be 54 in (1370 mm) and the low side reach shall be no less than 9 in (230 mm) above the floor (Fig. 6(a) and (b)). If the side reach is over an obstruction, the reach and clearances shall be as shown in Fig 6(c).

4.3 Accessible Route.

4.3.1* General. All walks, halls, corridors, aisles, *skywalks, tunnels,* and other spaces

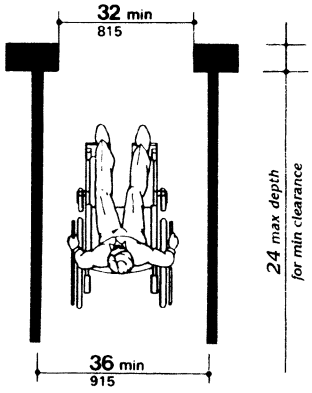

Fig. 1
Minimum Clear Width
for Single Wheelchair

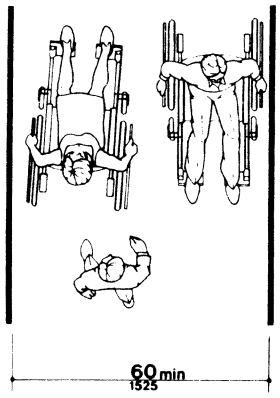

Fig. 2
Minimum Clear Width
for Two Wheelchairs

4.3 Accesssible Route

that are part of an accessible route shall comply with 4.3.

4.3.2 Location.

(1) At least one accessible route *within the boundary of the site* shall be provided from public transportation stops, accessible parking, and accessible passenger loading zones, and public streets or sidewalks to the accessible building entrance they serve. *The accessible route shall, to the maximum extent feasible, coincide with the route for the general public.*

(2) At least one accessible route shall connect accessible buildings, facilities, elements, and spaces that are on the same site.

(3) At least one accessible route shall connect accessible building or facility entrances with all accessible spaces and elements and with all accessible dwelling units within the building or facility.

(4) An accessible route shall connect at least one accessible entrance of each accessible dwelling unit with those exterior and interior spaces and facilities that serve the accessible dwelling unit.

4.3.3 Width. The minimum clear width of an accessible route shall be 36 in (915 mm) except at doors (see 4.13.5 and 4.13.6). If a person in a wheelchair must make a turn around an obstruction, the minimum clear width of the accessible route shall be as shown in Fig. 7(a) and (b).

4.3.4 Passing Space. If an accessible route has less than 60 in (1525 mm) clear width, then passing spaces at least 60 in by 60 in (1525 mm by 1525 mm) shall be located at reasonable intervals not to exceed 200 ft (61 m). A T-intersection of two corridors or walks is an acceptable passing place.

4.3.5 Head Room. Accessible routes shall comply with 4.4.2.

4.3.6 Surface Textures. The surface of an accessible route shall comply with 4.5.

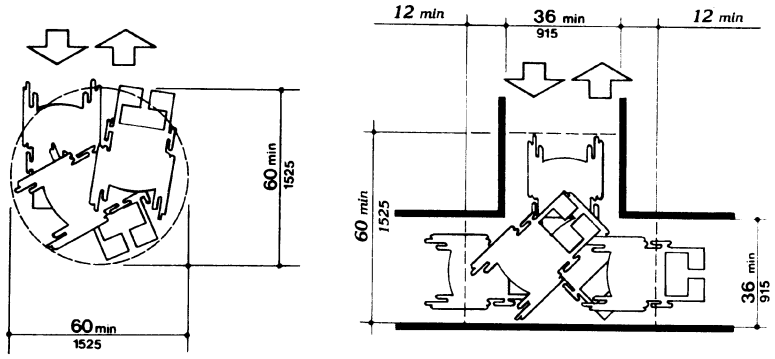

(a)
60-in (1525-mm)-Diameter Space

(b)
T-Shaped Space for 180° Turns

Fig. 3
Wheelchair Turning Space

4.3 Accessible Route

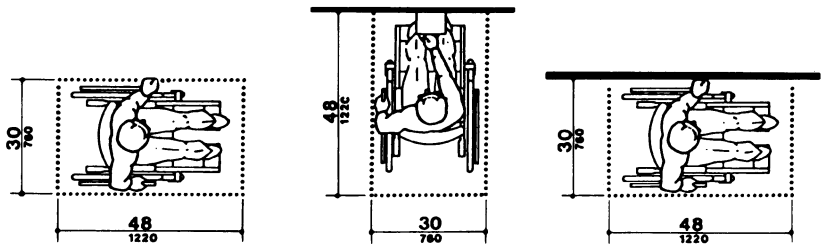

(a)
Clear Floor Space

(b)
Forward Approach

(c)
Parallel Approach

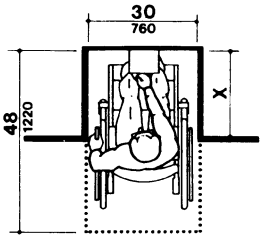

NOTE: x ≤ 24 in (610 mm).

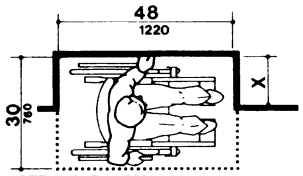

NOTE: x ≤ 15 in (380 mm).

(d)
Clear Floor Space in Alcoves

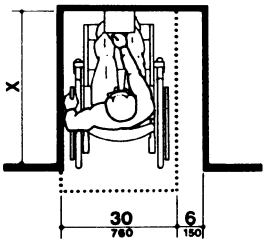

NOTE: If x > 24 in (610 mm), then an additional maneuvering clearance of 6 in (150 mm) shall be provided as shown.

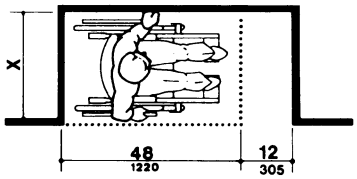

NOTE: If x > 15 in (380 mm), then an additional maneuvering clearance of 12 in (305 mm) shall be provided as shown.

(e)
Additional Maneuvering Clearances for Alcoves

Fig. 4
Minimum Clear Floor Space for Wheelchairs

17

4.3 Accessible Route

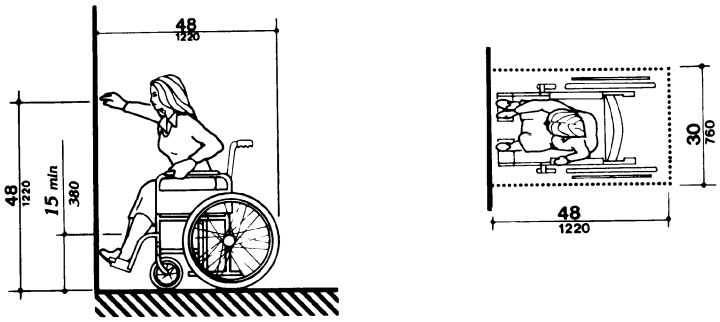

(a)
High Forward Reach Limit

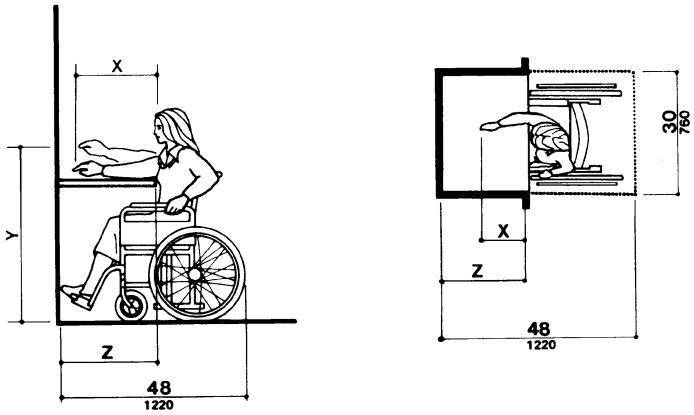

NOTE: x shall be ≤ 25 in (635 mm); z shall be ≥ x. When x < 20 in (510 mm), then y shall be 48 in (1220 mm) maximum. When x is 20 to 25 in (510 to 635 mm), then y shall be 44 in (1120 mm) maximum.

(b)
Maximum Forward Reach over an Obstruction

Fig. 5
Forward Reach

4.3.7 Slope

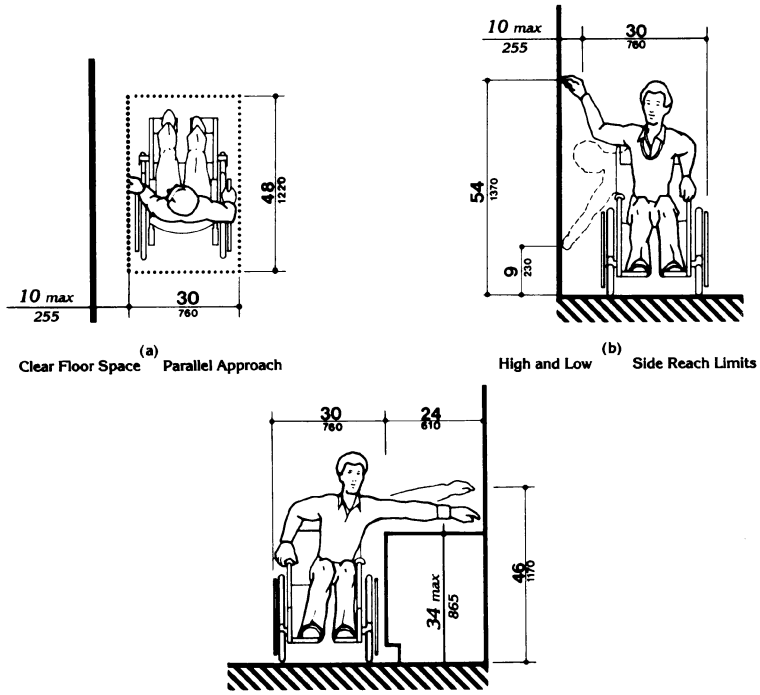

Fig. 6
Side Reach

4.3.7 Slope. An accessible route with a running slope greater than 1:20 is a ramp and shall comply with 4.8. Nowhere shall the cross slope of an accessible route exceed 1:50.

4.3.8 Changes in Levels. Changes in levels along an accessible route shall comply with 4.5.2. If an accessible route has changes in level greater than 1/2 in (13 mm), then a curb ramp, ramp, elevator, or platform lift *(as permitted in 4.1.3 and 4.1.6)* shall be provided that complies with 4.7, 4.8, 4.10, or 4.11, respectively. An accessible route does not include stairs, steps, or escalators. See definition of "egress, means of" in 3.5.

4.3.9 Doors. Doors along an accessible route shall comply with 4.13.

4.3.10* Egress

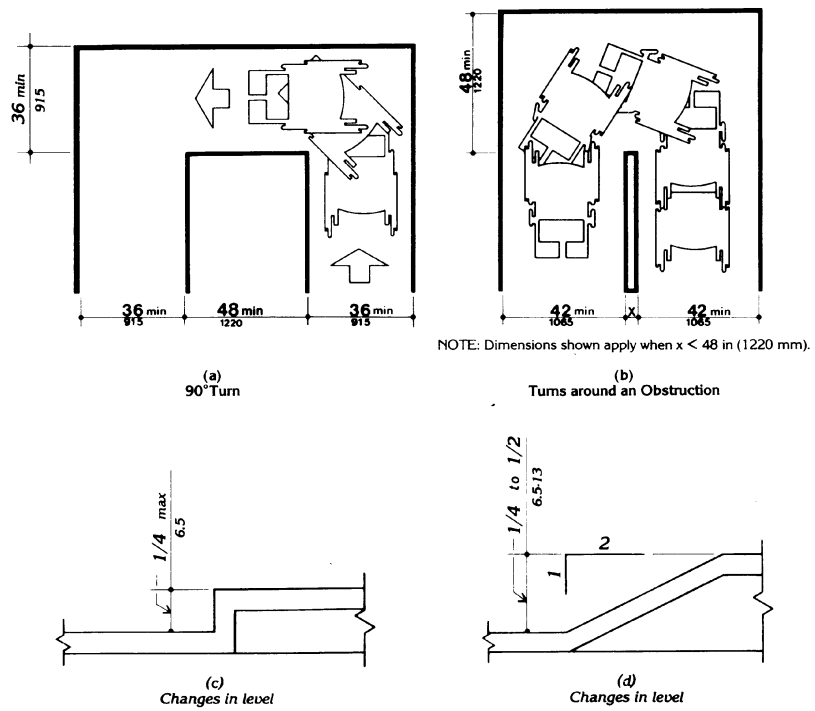

Fig. 7
Accessible Route

4.3.10* Egress. Accessible routes serving any accessible space or element shall also serve as a means of egress for emergencies or connect to an accessible area of *rescue assistance.*

4.3.11 Areas of Rescue Assistance.

4.3.11.1 Location and Construction. *An area of rescue assistance shall be one of the following:*

(1) A portion of a stairway landing within a smokeproof enclosure (complying with local requirements).

(2) A portion of an exterior exit balcony located immediately adjacent to an exit stairway when the balcony complies with local requirements for exterior exit balconies. Openings to the interior of the building located within 20 feet (6 m) of the

area of rescue assistance shall be protected with fire assemblies having a three-fourths hour fire protection rating.

(3) A portion of a one-hour fire-resistive corridor (complying with local requirements for fire-resistive construction and for openings) located immediately adjacent to an exit enclosure.

(4) A vestibule located immediately adjacent to an exit enclosure and constructed to the same fire-resistive standards as required for corridors and openings.

(5) A portion of a stairway landing within an exit enclosure which is vented to the exterior and is separated from the interior of the building with not less than one-hour fire-resistive doors.

(6) When approved by the appropriate local authority, an area or a room which is separated from other portions of the building by a smoke barrier. Smoke barriers shall have a fire-resistive rating of not less than one hour and shall completely enclose the area or room. Doors in the smoke barrier shall be tight-fitting smoke- and draft-control assemblies having a fire-protection rating of not less than 20 minutes and shall be self-closing or automatic closing. The area or room shall be provided with an exit directly to an exit enclosure. Where the room or area exits into an exit enclosure which is required to be of more than one-hour fire-resistive construction, the room or area shall have the same fire-resistive construction, including the same opening protection, as required for the adjacent exit enclosure.

(7) An elevator lobby when elevator shafts and adjacent lobbies are pressurized as required for smokeproof enclosures by local regulations and when complying with requirements herein for size, communication, and signage. Such pressurization system shall be activated by smoke detectors on each floor located in a manner approved by the appropriate local authority. Pressurization equipment and its duct work within the building shall be separated from other portions of the building by a minimum two-hour fire-resistive construction.

4.3.11.2 Size. *Each area of rescue assistance shall provide at least two accessible areas each being not less than 30 inches by 48 inches (760 mm by 1220 mm). The area of rescue assistance shall not encroach on any required exit width. The total number of such 30-inch by 48-inch (760 mm by 1220 mm) areas per story shall be not less than one for every 200 persons of calculated occupant load served by the area of rescue assistance.*

EXCEPTION: The appropriate local authority may reduce the minimum number of 30-inch by 48-inch (760 mm by 1220 mm) areas to one for each area of rescue assistance on floors where the occupant load is less than 200.

4.3.11.3* Stairway Width. *Each stairway adjacent to an area of rescue assistance shall have a minimum clear width of 48 inches between handrails.*

4.3.11.4* Two-way Communication. *A method of two-way communication, with both visible and audible signals, shall be provided between each area of rescue assistance and the primary entry. The fire department or appropriate local authority may approve a location other than the primary entry.*

4.3.11.5 Identification. *Each area of rescue assistance shall be identified by a sign which states "AREA OF RESCUE ASSISTANCE" and displays the international symbol of accessibility. The sign shall be illuminated when exit sign illumination is required. Signage shall also be installed at all inaccessible exits and where otherwise necessary to clearly indicate the direction to areas of rescue assistance. In each area of rescue assistance, instructions on the use of the area under emergency conditions shall be posted adjoining the two-way communication system.*

4.4 Protruding Objects.

4.4.1* General. Objects projecting from walls (for example, telephones) with their leading edges between 27 in and 80 in (685 mm and 2030 mm) above the finished floor shall protrude no more than 4 in (100 mm) into walks, halls, corridors, passageways, or aisles (see Fig. 8(a)). Objects mounted with their leading edges at or below 27 in (685 mm) above the finished floor may protrude any amount (see Fig. 8(a) and (b)). Free-standing objects mounted on posts or pylons may overhang 12 in (305 mm) maximum from 27 in to 80 in (685 mm to 2030 mm) above the ground or

4.4 Protruding Objects

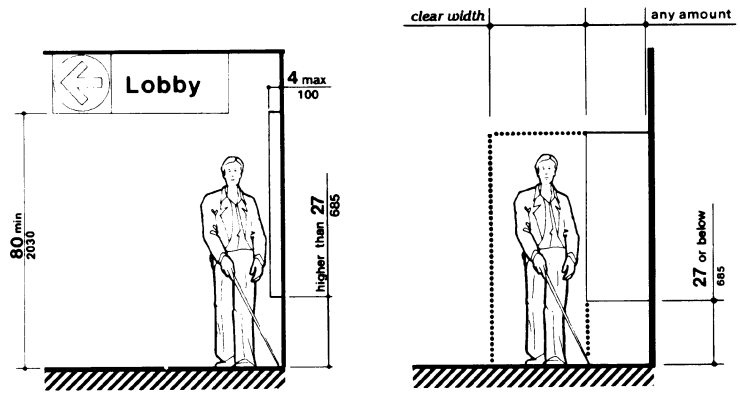

Fig. 8 (a)
Walking Parallel to a Wall

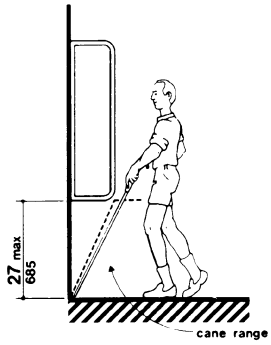

Fig. 8 (b)
Walking Perpendicular to a Wall

Fig. 8
Protruding Objects

finished floor (see Fig. 8(c) and (d)). Protruding objects shall not reduce the clear width of an accessible route or maneuvering space (see Fig. 8(e)).

4.4.2 Head Room. Walks, halls, corridors, passageways, aisles, or other circulation spaces shall have 80 in (2030 mm) minimum clear head room (see Fig. 8(a)). *If vertical clearance of an area adjoining an accessible route is reduced to less than 80 in (nominal dimension), a barrier to warn blind or visually-impaired persons shall be provided (see Fig. 8(c-1)).*

4.5 Ground and Floor Surfaces.

4.5.1* General. Ground and floor surfaces along accessible routes and in accessible rooms and spaces including floors, walks, ramps, stairs, and curb ramps, shall be stable, firm, slip-resistant, and shall comply with 4.5.

4.5.2 Changes in Level. Changes in level up to 1/4 in (6 mm) may be vertical and without edge treatment *(see Fig. 7(c))*. Changes in level between 1/4 in and 1/2 in (6 mm and 13 mm)

4.4 Protruding Objects

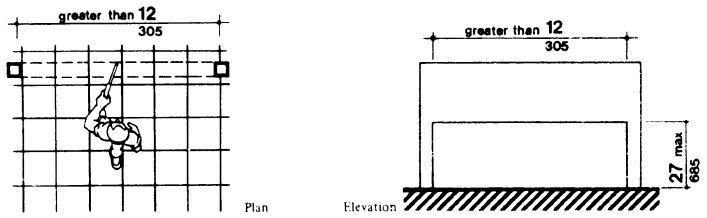

Fig. 8 (c) Free-Standing Overhanging Objects

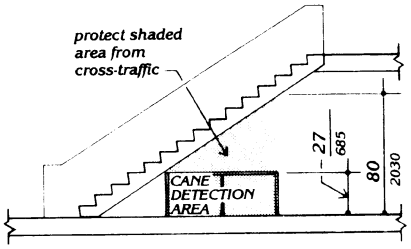

Fig. 8 (c-1) Overhead Hazards

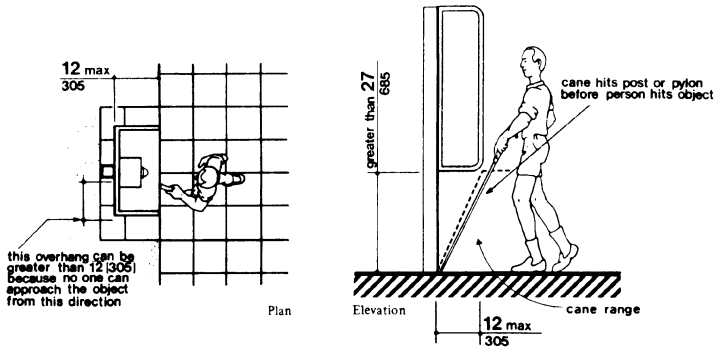

Fig. 8 (d)
Objects Mounted on Posts or Pylons

Fig. 8
Protruding Objects *(Continued)*

4.5 Ground and Floor Surfaces

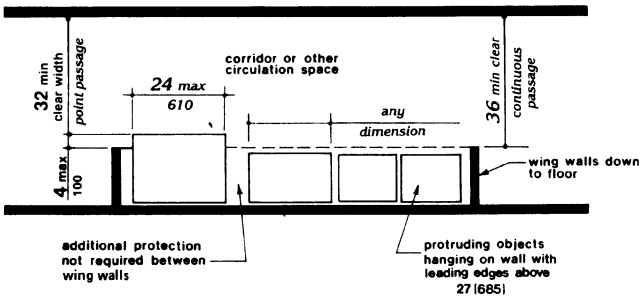

Fig. 8 (e)
Example of Protection around Wall-Mounted Objects and Measurements of Clear Widths

Fig. 8
Protruding Objects *(Continued)*

shall be beveled with a slope no greater than 1:2 *(see Fig. 7(d))*. Changes in level greater than 1/2 in (13 mm) shall be accomplished by means of a ramp that complies with 4.7 or 4.8.

4.5.3* Carpet. If carpet or carpet tile is used on a ground or floor surface, then it shall be securely attached; have a firm cushion, pad, or backing, or no cushion or pad; and have a level loop, textured loop, level cut pile, or level cut/uncut pile texture. The maximum pile *thickness* shall be 1/2 in (13 mm) (see Fig. 8(f)). Exposed edges of carpet shall be fastened to floor surfaces and have trim along the entire length of the exposed edge. Carpet edge trim shall comply with 4.5.2.

4.5.4 Gratings. If gratings are located in walking surfaces, then they shall have spaces no greater than 1/2 in (13 mm) wide in one direction *(see Fig. 8(g))*. If gratings have elongated openings, then they shall be placed so that the long dimension is perpendicular to the dominant direction of travel *(see Fig. 8(h))*.

4.6 Parking and Passenger Loading Zones.

4.6.1 Minimum Number. *Parking spaces required to be accessible by 4.1 shall comply with 4.6.2 through 4.6.5. Passenger loading zones required to be accessible by 4.1 shall comply with 4.6.5 and 4.6.6.*

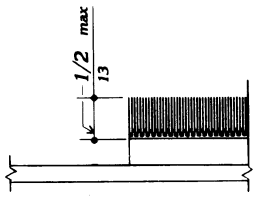

Fig. 8 (f)
Carpet Pile Thickness

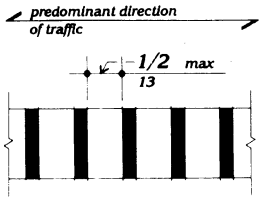

Fig. 8 (g)
Gratings

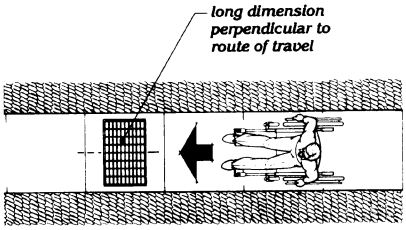

Fig. 8 (h)
Grating Orientation

4.6.2 Location. *Accessible parking spaces serving* a particular building shall be located on the shortest accessible route of travel *from adjacent parking* to an accessible entrance. *In parking facilities* that do not serve a particular building, *accessible parking* shall be located on the shortest accessible route *of travel* to an accessible pedestrian entrance of the parking facility. *In buildings with multiple accessible entrances with adjacent parking, accessible parking spaces shall be dispersed and located closest to the accessible entrances.*

4.6.3* Parking Spaces. *Accessible* parking spaces shall be at least 96 in (2440 mm) wide. Parking access aisles shall be part of an accessible route to the building or facility entrance and shall comply with 4.3. Two accessible parking spaces may share a common access aisle (see Fig. 9). Parked vehicle overhangs shall not reduce the clear width of an accessible route. *Parking spaces and access aisles shall be level with surface slopes not exceeding 1:50 (2%) in all directions.*

4.6.4* Signage. Accessible parking spaces shall be designated as reserved by a sign showing the symbol of accessibility (see 4.30.7). *Spaces complying with 4.1.2(5)(b) shall have an additional sign "Van-Accessible" mounted below the symbol of accessibility.* Such signs shall *be located so they cannot* be obscured by a vehicle parked in the space.

4.6.5* *Vertical Clearance.* *Provide minimum vertical clearance of 114 in (2895 mm) at accessible passenger loading zones and along at least one vehicle access route to such areas from site entrance(s) and exit(s). At parking spaces complying with 4.1.2(5)(b), provide minimum vertical clearance of 98 in (2490 mm) at the parking space and along at least one vehicle access route to such spaces from site entrance(s) and exit(s).*

4.6.6 Passenger Loading Zones. Passenger loading zones shall provide an access aisle at least 60 in *(1525 mm)* wide and 20 ft *(240 in) (6100 mm)* long adjacent and parallel to the vehicle pull-up space (see Fig. 10). If there are curbs between the access aisle and the vehicle pull-up space, then a curb ramp complying with 4.7 shall be provided. *Vehicle standing spaces and access aisles shall be level with*

4.7 Curb Ramps

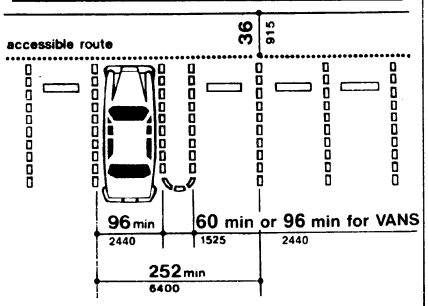

Fig. 9
Dimensions of Parking Spaces

surface slopes not exceeding 1:50 (2%) in all directions.

4.7 Curb Ramps.

4.7.1 Location. Curb ramps complying with 4.7 shall be provided wherever an accessible route crosses a curb.

4.7.2 Slope. Slopes of curb ramps shall comply with 4.8.2. The slope shall be measured as shown in Fig. 11. *Transitions from ramps to walks, gutters, or streets shall be flush and free of abrupt changes. Maximum slopes of adjoining gutters, road surface immediately adjacent to the curb ramp, or accessible route shall not exceed 1:20.*

4.7.3 Width. The minimum width of a curb ramp shall be 36 in (915 mm), exclusive of flared sides.

4.7.4 Surface. Surfaces of curb ramps shall comply with 4.5.

4.7.5 Sides of Curb Ramps. If a curb ramp is located where pedestrians must walk across the ramp, *or where it is not protected by handrails or guardrails,* it shall have flared sides; the maximum slope of the flare shall be 1:10 (see Fig. 12(a)). Curb ramps with returned curbs may be used where pedestrians would not normally walk across the ramp (see Fig. 12(b)).

4.7.6 Built-up Curb Ramps. Built-up curb ramps shall be located so that they do not project into vehicular traffic lanes (see Fig. 13).

4.7.7 *Detectable Warnings.* A curb ramp shall have a *detectable* warning complying with 4.29.2. *The detectable warning shall extend* the full width and depth of the curb ramp.

4.7.8 Obstructions. Curb ramps shall be located or protected to prevent their obstruction by parked vehicles.

4.7.9 Location at Marked Crossings. Curb ramps at marked crossings shall be wholly contained within the markings, excluding any flared sides (see Fig. 15).

4.7.10 Diagonal Curb Ramps. If diagonal (or corner type) curb ramps have returned curbs or other well-defined edges, such edges shall be parallel to the direction of pedestrian flow. The bottom of diagonal curb ramps shall have 48 in (1220 mm) minimum clear space as shown in Fig. 15(c) and (d). If diagonal curb ramps are provided at marked crossings, the 48 in (1220 mm) clear space shall be within the markings (see Fig. 15(c) and (d)). If diagonal curb ramps have flared sides, they shall also have at least a 24 in (610 mm) long segment of straight curb located on each side of the curb ramp and within the marked crossing (see Fig. 15(c)).

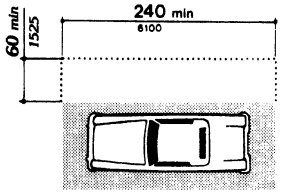

Fig. 10
Access Aisle at Passenger Loading Zones

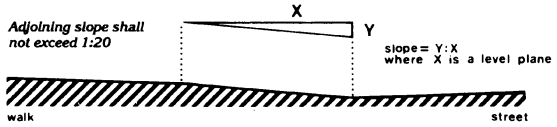

Fig. 11
Measurement of Curb Ramp Slopes

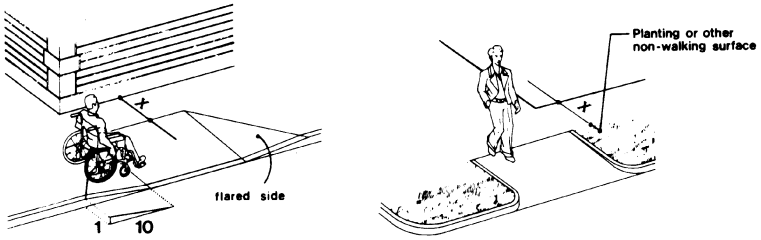

(a)
Flared Sides

(b)
Returned Curb

If X is less than 48 in, then the slope of the flared side shall not exceed 1:12.

Fig. 12
Sides of Curb Ramps

4.7.11 Islands. Any raised islands in crossings shall be cut through level with the street or have curb ramps at both sides and a level area at least 48 in (1220 mm) long between the curb ramps in the part of the island intersected by the crossings (see Fig. 15(a) and (b)).

4.8 Ramps.

4.8.1* General. Any part of an accessible route with a slope greater than 1:20 shall be considered a ramp and shall comply with 4.8.

4.8.2* Slope and Rise. The least possible slope shall be used for any ramp. The maximum slope of a ramp in new construction shall be 1:12. The maximum rise for any run shall be 30 in (760 mm) (see Fig. 16). Curb ramps and ramps to be constructed on existing sites or in existing buildings or facilities may have slopes and rises as *allowed in 4.1.6(3)(a)* if space limitations prohibit the use of a 1:12 slope or less.

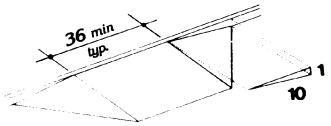

Fig. 13
Built-Up Curb Ramp

4.8 Ramps

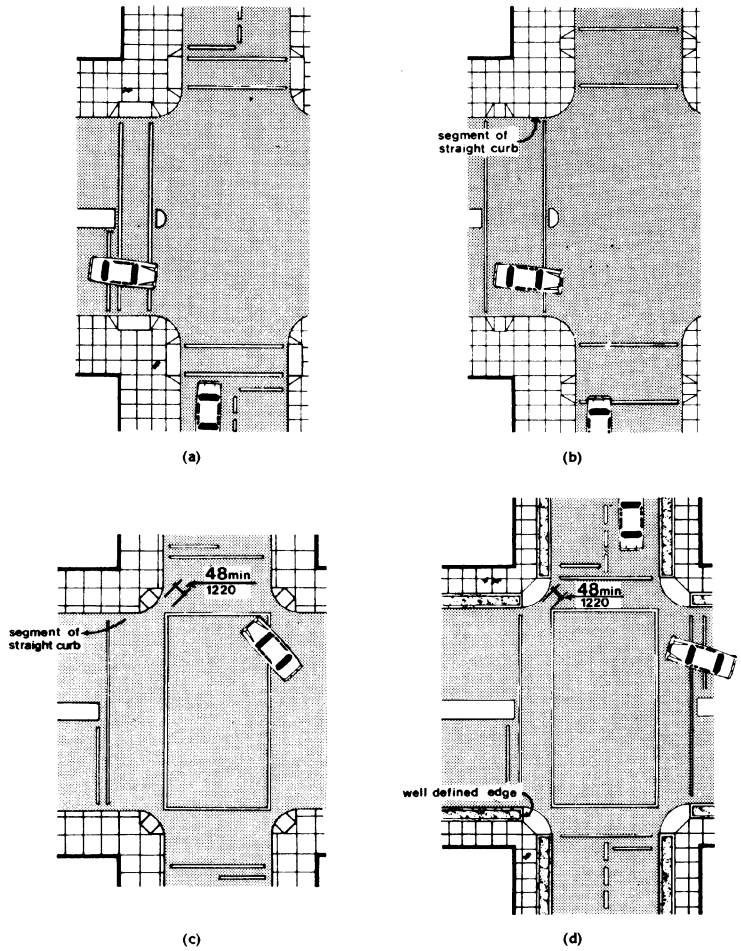

Fig. 15
Curb Ramps at Marked Crossings

28

4.8 Ramps

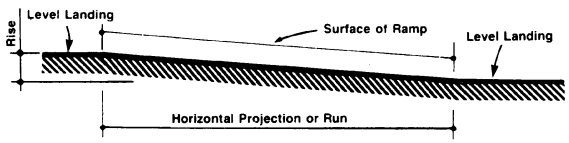

	Maximum Rise		Maximum Horizontal Projection	
Slope	in	mm	ft	m
1:12 to < 1:16	30	760	30	9
1:16 to < 1:20	30	760	40	12

Fig. 16
Components of a Single Ramp Run and Sample Ramp Dimensions

4.8.3 Clear Width. The minimum clear width of a ramp shall be 36 in (915 mm).

4.8.4* Landings. Ramps shall have level landings at bottom and top of *each ramp and* each *ramp* run. Landings shall have the following features:

(1) The landing shall be at least as wide as the ramp run leading to it.

(2) The landing length shall be a minimum of 60 in (1525 mm) clear.

(3) If ramps change direction at landings, the minimum landing size shall be 60 in by 60 in (1525 mm by 1525 mm).

(4) If a doorway is located at a landing, then the area in front of the doorway shall comply with 4.13.6.

4.8.5* Handrails. If a ramp run has a rise greater than 6 in (150 mm) or a horizontal projection greater than 72 in (1830 mm), then it shall have handrails on both sides. Handrails are not required on curb ramps *or adjacent to seating in assembly areas*. Handrails shall comply with 4.26 and shall have the following features:

(1) Handrails shall be provided along both sides of ramp segments. The inside handrail on switchback or dogleg ramps shall always be continuous.

(2) If handrails are not continuous, they shall extend at least 12 in (305 mm) beyond the top and bottom of the ramp segment and shall be parallel with the floor or ground surface (see Fig. 17).

(3) The clear space between the handrail and the wall shall be 1 - 1/2 in (38 mm).

(4) Gripping surfaces shall be continuous.

(5) Top of handrail gripping surfaces shall be mounted between 34 in and 38 in (865 mm and 965 mm) above ramp surfaces.

(6) Ends of handrails shall be either rounded or returned smoothly to floor, wall, or post.

(7) Handrails shall not rotate within their fittings.

4.8.6 Cross Slope and Surfaces. The cross slope of ramp surfaces shall be no greater than 1:50. Ramp surfaces shall comply with 4.5.

4.9 Stairs

4.8.7 Edge Protection. Ramps and landings with drop-offs shall have curbs, walls, railings, or projecting surfaces that prevent people from slipping off the ramp. Curbs shall be a minimum of 2 in (50 mm) high (see Fig. 17).

4.8.8 Outdoor Conditions. Outdoor ramps and their approaches shall be designed so that water will not accumulate on walking surfaces.

4.9 Stairs.

4.9.1* Minimum Number. *Stairs required to be accessible by 4.1 shall comply with 4.9.*

4.9.2 Treads and Risers. On any given flight of stairs, all steps shall have uniform riser heights and uniform tread widths. Stair treads shall be no less than 11 in (280 mm) wide, measured from riser to riser (see Fig. 18(a)). *Open risers are not permitted.*

4.9.3 Nosings. The undersides of nosings shall not be abrupt. The radius of curvature at the leading edge of the tread shall be no greater than 1/2 in (13 mm). Risers shall be sloped or the underside of the nosing shall have an angle not less than 60 degrees from the horizontal. Nosings shall project no more than 1-1/2 in (38 mm) (see Fig. 18).

4.9.4 Handrails. Stairways shall have handrails at both sides of all stairs. Handrails shall comply with 4.26 and shall have the following features:

(1) Handrails shall be continuous along both sides of stairs. The inside handrail on switchback or dogleg stairs shall always be continuous (see Fig. 19(a) and (b)).

(2) If handrails are not continuous, they shall extend at least 12 in (305 mm) beyond the top riser and at least 12 in (305 mm) plus the width of one tread beyond the bottom riser. At the top, the extension shall be parallel with the floor or ground surface. At the bottom, the handrail shall continue to slope for a distance of the width of one tread from the bottom riser; the remainder of the extension shall be horizontal (see Fig. 19(c) and (d)). Handrail extensions shall comply with 4.4.

(3) The clear space between handrails and wall shall be 1-1/2 in (38 mm).

(4) Gripping surfaces shall be uninterrupted by newel posts, other construction elements, or obstructions.

(5) Top of handrail gripping surface shall be mounted between 34 in and 38 in (865 mm and 965 mm) above stair nosings.

(6) Ends of handrails shall be either rounded or returned smoothly to floor, wall or post.

(7) Handrails shall not rotate within their fittings.

4.9.5 *Detectable* Warnings at Stairs. *(Reserved).*

4.9.6 Outdoor Conditions. Outdoor stairs and their approaches shall be designed so that water will not accumulate on walking surfaces.

4.10 Elevators.

4.10.1 General. *Accessible* elevators shall be on an accessible route and shall comply with 4.10 and with the *ASME A17.1-1990*, Safety Code for Elevators and Escalators. *Freight elevators shall not be considered as meeting the requirements of this section unless the only elevators provided are used as combination passenger and freight elevators for the public and employees.*

4.10.2 Automatic Operation. Elevator operation shall be automatic. Each car shall be equipped with a self-leveling feature that will automatically bring the car to floor landings within a tolerance of 1/2 in (13 mm) under rated loading to zero loading conditions. This self-leveling feature shall be automatic and independent of the operating device and shall correct the overtravel or undertravel.

4.10.3 Hall Call Buttons. Call buttons in elevator lobbies and halls shall be centered at 42 in (1065 mm) above the floor. Such call buttons shall have visual signals to indicate when each call is registered and when each call is answered. Call buttons shall be a minimum of 3/4 in (19 mm) in the smallest dimension. The button designating the up direction shall be on top. (See Fig. 20.) *Buttons shall be raised or flush. Objects mounted beneath hall call buttons shall not project into the elevator lobby more than 4 in (100 mm).*

4.10 Elevators

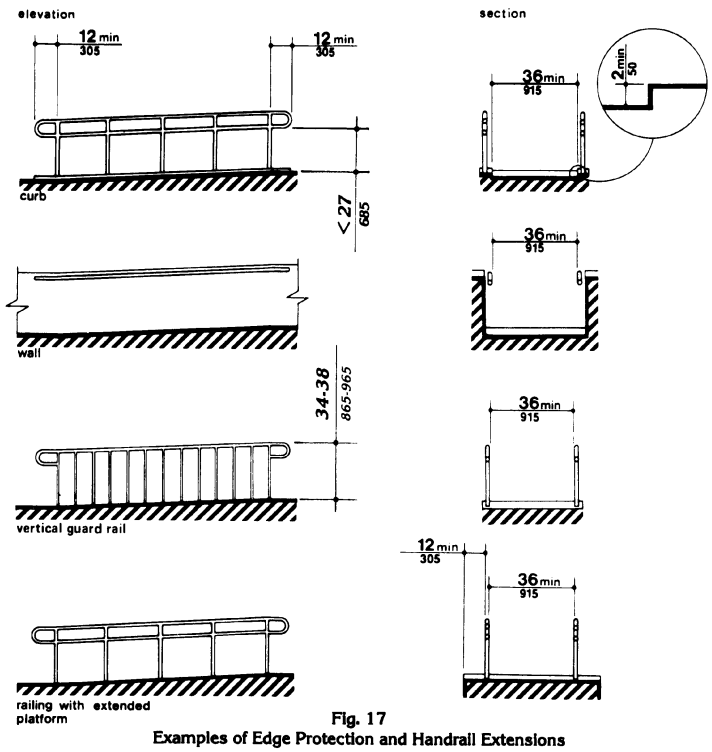

Fig. 17
Examples of Edge Protection and Handrail Extensions

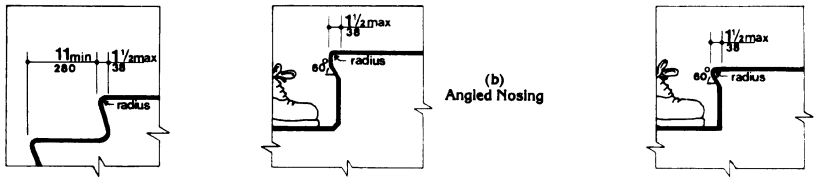

(a)
Flush Riser

(b)
Angled Nosing

(c)
Rounded Nosing

Fig. 18
Usable Tread Width and Examples of Acceptable Nosings

31

4.10 Elevators

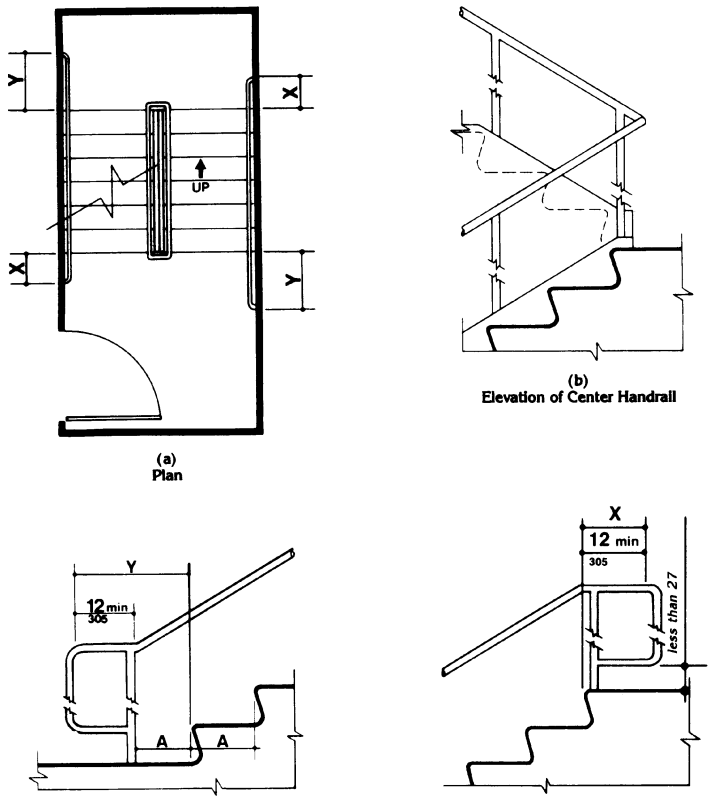

NOTE:

X is the 12 in minimum handrail extension required at each top riser.

Y is the minimum handrail extension of 12 in plus the width of one tread that is required at each bottom riser.

Fig. 19
Stair Handrails

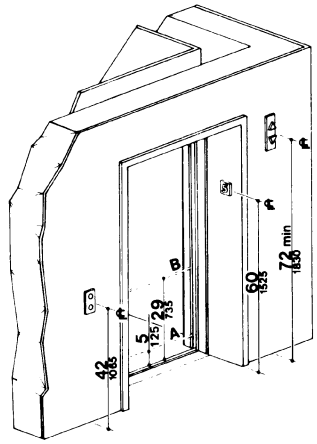

NOTE: The automatic door reopening device is activated if an object passes through either line A or line B. Line A and line B represent the vertical locations of the door reopening device not requiring contact.

Fig. 20
Hoistway and Elevator Entrances

4.10.4 Hall Lanterns. A visible and audible signal shall be provided at each hoistway entrance to indicate which car is answering a call. Audible signals shall sound once for the up direction and twice for the down direction or shall have verbal annunciators that say "up" or "down." Visible signals shall have the following features:

(1) Hall lantern fixtures shall be mounted so that their centerline is at least 72 in (1830 mm) above the lobby floor. (See Fig. 20.)

(2) Visual elements shall be at least 2-1/2 in (64 mm) in the smallest dimension.

(3) Signals shall be visible from the vicinity of the hall call button (see Fig. 20). In-car lanterns located in cars, visible from the vicinity of hall call buttons, and conforming to the above requirements, shall be acceptable.

4.10.5 *Raised and Braille* Characters on Hoistway Entrances. All elevator hoistway entrances shall have *raised and Braille* floor designations provided on both jambs. The centerline of the characters shall be 60 in (1525 mm) *above finish* floor. Such characters shall be 2 in (50 mm) high and shall comply with 4.30.4. Permanently applied plates are acceptable if they are permanently fixed to the jambs. (See Fig. 20).

4.10.6* Door Protective and Reopening Device. Elevator doors shall open and close automatically. They shall be provided with a reopening device that will stop and reopen a car door and hoistway door automatically if the door becomes obstructed by an object or person. The device shall be capable of completing these operations without requiring contact for an obstruction passing through the opening at heights of 5 in and 29 in (125 mm and 735 mm) above finish floor (see Fig. 20). Door reopening devices shall remain effective for at least 20 seconds. After such an interval, doors may close in accordance with the requirements of *ASME A17.1-1990.*

4.10.7* Door and Signal Timing for Hall Calls. The minimum acceptable time from notification that a car is answering a call until the doors of that car start to close shall be calculated from the following equation:

$$T = D/(1.5 \text{ ft/s}) \text{ or } T = D/(445 \text{ mm/s})$$

where T total time in seconds and D distance (in feet or millimeters) from a point in the lobby or corridor 60 in (1525 mm) directly in front of the farthest call button controlling that car to the centerline of its hoistway door (see Fig. 21). For cars with in-car lanterns, T begins when the lantern is visible from the vicinity of hall call buttons and an audible signal is sounded. *The minimum acceptable notification time shall be 5 seconds.*

4.10.8 Door Delay for Car Calls. The minimum time for elevator doors to remain fully open in response to a car call shall be 3 seconds.

4.10.9 Floor Plan of Elevator Cars. The floor area of elevator cars shall provide space for wheelchair users to enter the car, maneuver

4.10.12 Car Controls

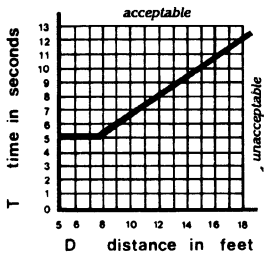

Fig. 21
Graph of Timing Equation

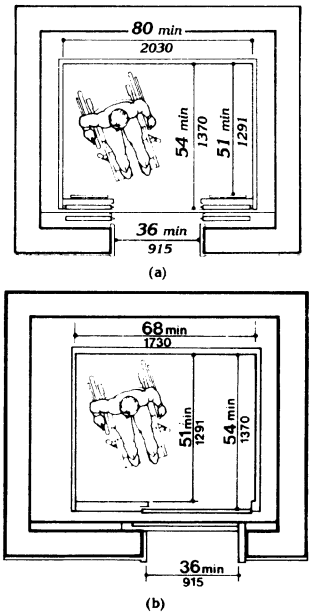

Fig. 22
Minimum Dimensions of Elevator Cars

within reach of controls, and exit from the car. Acceptable door opening and inside dimensions shall be as shown in Fig. 22. The clearance between the car platform sill and the edge of any hoistway landing shall be no greater than 1-1/4 in (32 mm).

4.10.10 Floor Surfaces. Floor surfaces shall comply with 4.5.

4.10.11 Illumination Levels. The level of illumination at the car controls, platform, and car threshold and landing sill shall be at least 5 footcandles (53.8 lux).

4.10.12* Car Controls. Elevator control panels shall have the following features:

(1) Buttons. All control buttons shall be at least 3/4 in (19 mm) in their smallest dimension. They *shall* be *raised* or flush.

(2) Tactile, *Braille*, and Visual Control Indicators. All control buttons shall be designated by *Braille and by raised* standard alphabet characters for letters, arabic characters for numerals, or standard symbols as shown in Fig. 23(a), and as required in *ASME A17.1-1990. Raised and Braille* characters and symbols shall comply with 4.30. The call button for the main entry floor shall be designated by a *raised* star at the left of the floor designation (see Fig. 23(a)). All raised designations for control buttons shall be placed immediately to the left of the button to which they apply. Applied plates, permanently attached, are an acceptable means to provide raised control designations. Floor buttons shall be provided with visual indicators to show when each call is registered. The visual indicators shall be extinguished when each call is answered.

(3) Height. All floor buttons shall be no higher than 54 in (1370 mm) above the *finish floor for side approach and 48 in (1220 mm) for front approach.* Emergency controls, including the emergency alarm and emergency stop, shall be grouped at the bottom of the panel and shall have their centerlines no less than 35 in (890 mm) above the finish floor (see Fig. 23(a) and (b)).

4.10.13* Car Position Indicators

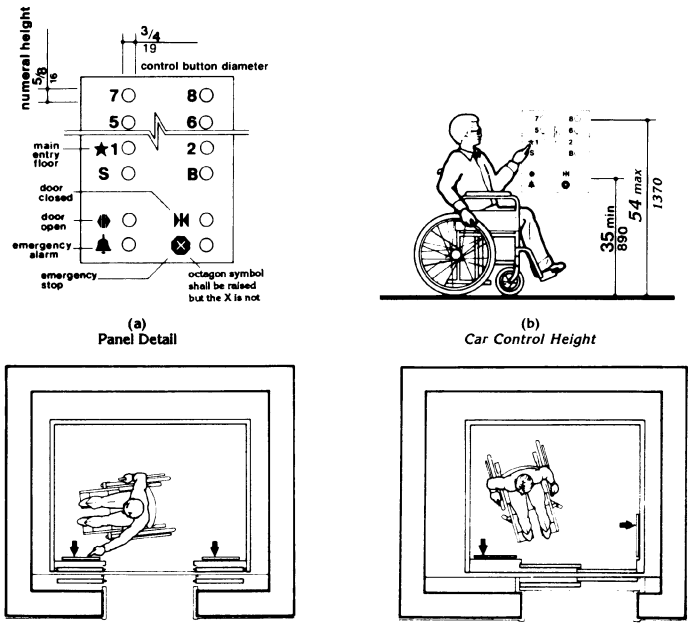

(a)
Panel Detail

(b)
Car Control Height

(c)
Alternate Locations of Panel with Center Opening Door

(d)
Alternate Locations of Panel with Side Opening Door

Fig. 23
Car Controls

(4) Location. Controls shall be located on a front wall if cars have center opening doors, and at the side wall or at the front wall next to the door if cars have side opening doors (see Fig. 23(c) and (d)).

4.10.13* Car Position Indicators. In elevator cars, a visual car position indicator shall be provided above the car control panel or over the door to show the position of the elevator in the hoistway. As the car passes or stops at a floor served by the elevators, the corresponding numerals shall illuminate, and an audible signal shall sound. Numerals shall be a minimum of 1/2 in (13 mm) high. The audible signal shall be no less than 20 decibels with a frequency no higher than 1500 Hz. An automatic verbal announcement of the floor number at which a car stops or which a car passes may be substituted for the audible signal.

4.10.14* Emergency Communications. If provided, emergency two-way communication systems between the elevator and a point outside the hoistway shall comply with *ASME*

4.11 Platform Lifts *(Wheelchair Lifts)*

A17.1-1990. The highest operable part of a two-way communication system shall be a maximum of *48 in (1220 mm)* from the floor of the car. It shall be identified by a raised symbol and lettering complying with 4.30 and located adjacent to the device. If the system uses a handset then the length of the cord from the panel to the handset shall be at least 29 in (735 mm). *If the system is located in a closed compartment the compartment door hardware shall conform to 4.27, Controls and Operating Mechanisms. The emergency intercommunication system shall not require voice communication.*

4.11 Platform Lifts *(Wheelchair Lifts).*

4.11.1 Location. *Platform lifts (wheelchair lifts) permitted by 4.1 shall comply with the requirements of 4.11.*

4.11.2* Other Requirements. If platform lifts *(wheelchair lifts)* are used, they shall comply with 4.2.4, 4.5, 4.27, and *ASME A17.1 Safety Code for Elevators and Escalators, Section XX, 1990.*

4.11.3 Entrance. *If platform lifts are used then they shall facilitate unassisted entry, operation, and exit from the lift in compliance with 4.11.2.*

4.12 Windows.

4.12.1* General. *(Reserved).*

4.12.2* Window Hardware. *(Reserved).*

4.13 Doors.

4.13.1 General. *Doors required to be accessible by 4.1* shall comply with the requirements of 4.13.

4.13.2 Revolving Doors and Turnstiles. Revolving doors or turnstiles shall not be the only means of passage at an accessible entrance or along an accessible route. *An accessible gate or door shall be provided adjacent to the turnstile or revolving door and shall be so designed as to facilitate the same use pattern.*

4.13.3 Gates. Gates, including ticket gates, shall meet all applicable specifications of 4.13.

4.13.4 Double-Leaf Doorways. If doorways have two *independently operated* door leaves, then at least one leaf shall meet the specifications in 4.13.5 and 4.13.6. That leaf shall be an active leaf.

4.13.5 Clear Width. Doorways shall have a minimum clear opening of 32 in (815 mm) with the door open 90 degrees, measured between the face of the door and the *opposite* stop (see Fig. 24(a), (b), (c), and (d)). Openings more than 24 in (610 mm) in depth shall comply with 4.2.1 and 4.3.3 (see Fig. 24(e)).

EXCEPTION: Doors not requiring full user passage, such as shallow closets, may have the clear opening reduced to 20 in (510 mm) minimum.

4.13.6 Maneuvering Clearances at Doors. Minimum maneuvering clearances at doors that are not automatic or power-assisted shall be as shown in Fig. 25. The floor or ground area within the required clearances shall be level and clear.

EXCEPTION: Entry doors to acute care hospital bedrooms for in-patients shall be exempted from the requirement for space at the latch side of the door (see dimension "x" in Fig. 25) if the door is at least 44 in (1120 mm) wide.

4.13.7 Two Doors in Series. The minimum space between two hinged or pivoted doors in series shall be 48 in (1220 mm) plus the width of any door swinging into the space. Doors in series shall swing either in the same direction or away from the space between the doors (see Fig. 26).

4.13.8* Thresholds at Doorways. Thresholds at doorways shall not exceed 3/4 in (19 mm) in height for exterior sliding doors or 1/2 in (13 mm) for other types of doors. Raised thresholds and floor level changes at accessible doorways shall be beveled with a slope no greater than 1:2 (see 4.5.2).

4.13.9* Door Hardware. Handles, pulls, latches, locks, and other operating devices on accessible doors shall have a shape that is easy

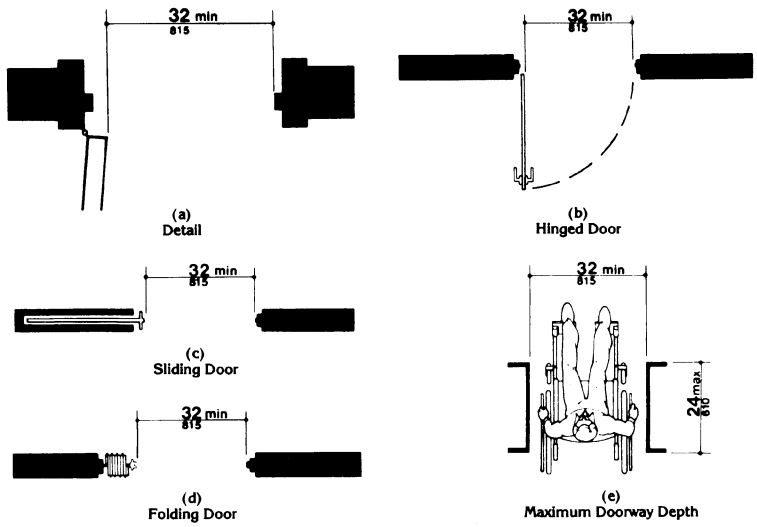

Fig. 24
Clear Doorway Width and Depth

to grasp with one hand and does not require tight grasping, tight pinching, or twisting of the wrist to operate. Lever-operated mechanisms, push-type mechanisms, and U-shaped handles are acceptable designs. When sliding doors are fully open, operating hardware shall be exposed and usable from both sides. *Hardware required for accessible door passage shall be mounted no higher than 48 in (1220 mm) above finished floor.*

4.13.10* Door Closers. If a door has a closer, then the sweep period of the closer shall be adjusted so that from an open position of 70 degrees, the door will take at least 3 seconds to move to a point 3 in (75 mm) from the latch, measured to the leading edge of the door.

4.13.11* Door Opening Force. The maximum force for pushing or pulling open a door shall be as follows:

(1) Fire doors shall have the minimum opening force allowable by the appropriate administrative authority.

(2) Other doors.

(a) exterior hinged doors: *(Reserved).*

(b) interior hinged doors: 5 lbf (22.2N)

(c) sliding or folding doors: 5 lbf (22.2N)

These forces do not apply to the force required to retract latch bolts or disengage other devices that may hold the door in a closed position.

4.13 Doors

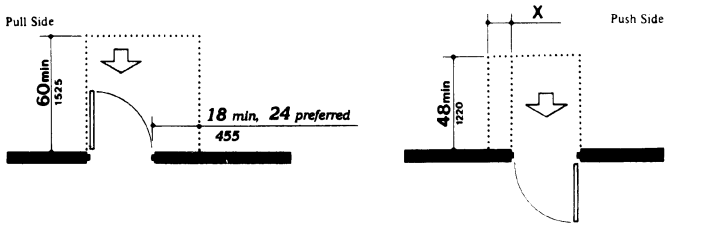

NOTE: x = 12 in (305 mm) if door has both a closer and latch.

(a)
Front Approaches — Swinging Doors

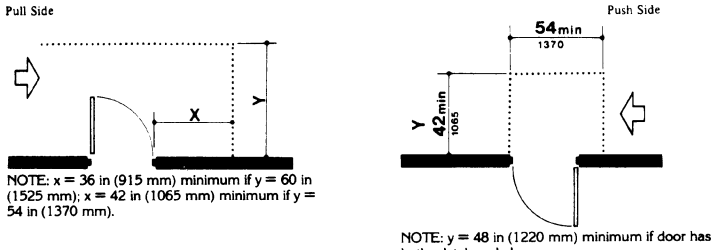

NOTE: x = 36 in (915 mm) minimum if y = 60 in (1525 mm); x = 42 in (1065 mm) minimum if y = 54 in (1370 mm).

NOTE: y = 48 in (1220 mm) minimum if door has both a latch and closer.

(b)
Hinge Side Approaches — Swinging Doors

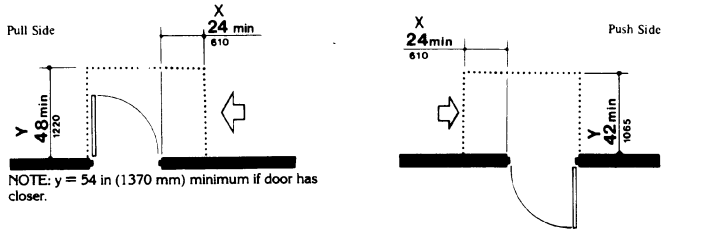

NOTE: y = 54 in (1370 mm) minimum if door has closer.

NOTE: y = 48 in (1220 mm) minimum if door has closer.

(c)
Latch Side Approaches — Swinging Doors

NOTE: All doors in alcoves shall comply with the clearances for front approaches.

Fig. 25
Maneuvering Clearances at Doors

38

4.13 Doors

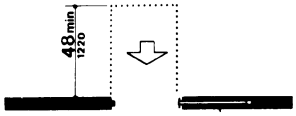

(d)
Front Approach — Sliding Doors *and Folding Doors*

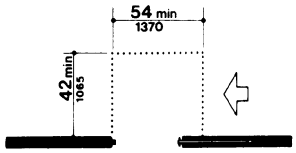

(e)
Slide Side Approach — Sliding Doors *and Folding Doors*

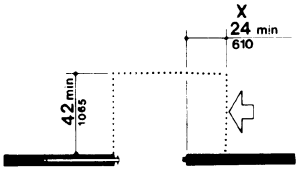

(f)
Latch Side Approach — Sliding Doors *and Folding Doors*

NOTE: All doors in alcoves shall comply with the clearances for front approaches.

Fig. 25
Maneuvering Clearances at Doors *(Continued)*

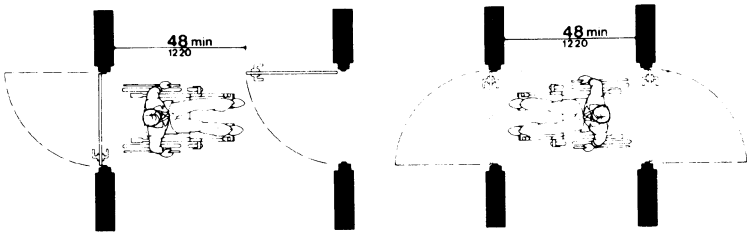

Fig. 26
Two Hinged Doors in Series

4.14 Entrances

4.13.12* Automatic Doors and Power-Assisted Doors. If an automatic door is used, then it shall comply with *ANSI/BHMA A156.10-1985.* Slowly opening, low-powered, automatic doors shall *comply with ANSI A156.19-1984.* Such doors shall not open to back check faster than 3 seconds and shall require no more than 15 lbf (66.6N) to stop door movement. If a power-assisted door is used, its door-opening force shall comply with 4.13.11 and its closing shall conform to the requirements in *ANSI A156.19-1984.*

4.14 Entrances.

4.14.1 Minimum Number. *Entrances required to be accessible by 4.1* shall be part of an accessible route complying with 4.3. Such entrances shall be connected by an accessible route to public transportation stops, to accessible parking and passenger loading zones, and to public streets or sidewalks if available (see 4.3.2(1)). They shall also be connected by an accessible route to all accessible spaces or elements within the building or facility.

4.14.2 Service Entrances. A service entrance shall not be the sole accessible entrance unless it is the only entrance to a building or facility (for example, in a factory or garage).

4.15 Drinking Fountains and Water Coolers.

4.15.1 Minimum Number. *Drinking fountains or water coolers required to be accessible by 4.1* shall comply with 4.15.

4.15.2* Spout Height. Spouts shall be no higher than 36 in (915 mm), measured from the floor or ground surfaces to the spout outlet (see Fig. 27(a)).

4.15.3 Spout Location. The spouts of drinking fountains and water coolers shall be at the front of the unit and shall direct the water flow in a trajectory that is parallel or nearly parallel to the front of the unit. The spout shall provide a flow of water at least 4 in (100 mm) high so as to allow the insertion of a cup or glass under the flow of water. *On an accessible drinking fountain with a round or oval bowl, the spout must be positioned so the flow of water is within 3 in (75 mm) of the front edge of the fountain.*

4.15.4 Controls. Controls shall comply with 4.27.4. *Unit controls shall be front mounted or side mounted near the front edge.*

4.15.5 Clearances.

(1) Wall- and post-mounted cantilevered units shall have a clear knee space between the bottom of the apron and the floor or ground at least 27 in (685 mm) high, 30 in (760 mm) wide, and 17 in to 19 in (430 mm to 485 mm) deep (see Fig. 27(a) and (b)). Such units shall also have a minimum clear floor space 30 in by 48 in (760 mm by 1220 mm) to allow a person in a wheelchair to approach the unit facing forward.

(2) Free-standing or built-in units not having a clear space under them shall have a clear floor space at least 30 in by 48 in (760 mm by 1220 mm) that allows a person in a wheelchair to make a parallel approach to the unit (see Fig. 27(c) and (d)). This clear floor space shall comply with 4.2.4.

4.16 Water Closets.

4.16.1 General. Accessible water closets shall comply with 4.16.

4.16.2 Clear Floor Space. Clear floor space for water closets not in stalls shall comply with Fig. 28. Clear floor space may be arranged to allow either a left-handed or right-handed approach.

4.16.3* Height. The height of water closets shall be 17 in to 19 in (430 mm to 485 mm), measured to the top of the toilet seat (see Fig. 29(b)). *Seats shall not be sprung to return to a lifted position.*

4.16.4* Grab Bars. Grab bars for water closets not located in stalls shall comply with 4.26 and Fig. 29. *The grab bar behind the water closet shall be 36 in (915 mm) minimum.*

4.16.5* Flush Controls. Flush controls shall be hand operated *or automatic* and shall comply with 4.27.4. Controls for flush valves

shall be mounted on the wide side of toilet areas no more than 44 in (1120 mm) above the floor.

4.16.6 Dispensers. Toilet paper dispensers shall be installed within reach, as shown in Fig. 29(b). *Dispensers that control delivery, or that do not permit continuous paper flow, shall not be used.*

4.17 Toilet Stalls.

4.17.1 Location. Accessible toilet stalls shall be on an accessible route and shall meet the requirements of 4.17.

4.17.2 Water Closets. Water closets in accessible stalls shall comply with 4.16.

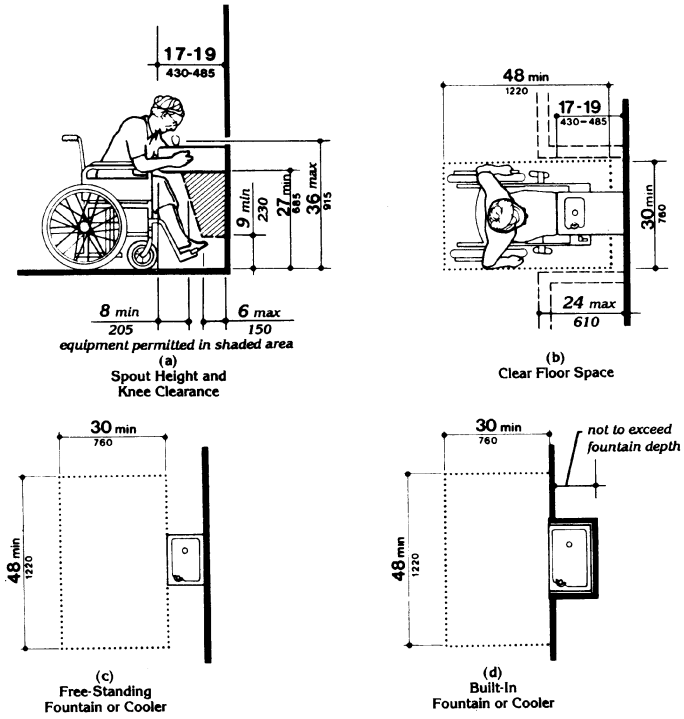

Fig. 27
Drinking Fountains and Water Coolers

4.17 Toilet Stalls

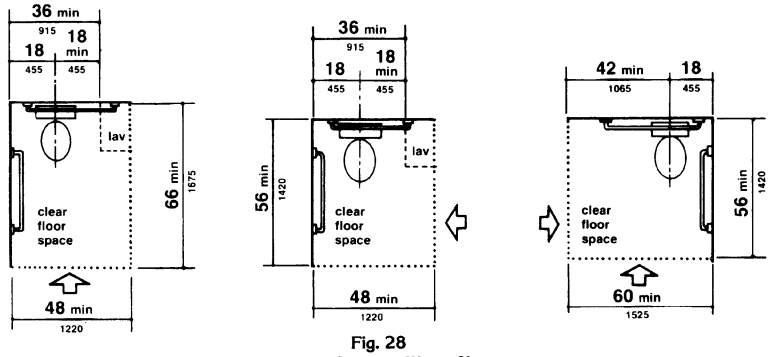

Fig. 28
Clear Floor Space at Water Closets

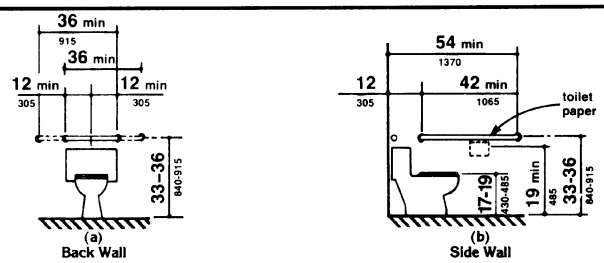

Fig. 29
Grab Bars at Water Closets

4.17.3* Size and Arrangement. The size and arrangement of the standard toilet stall shall comply with Fig. 30(a), *Standard Stall.* Standard toilet stalls with a minimum depth of 56 in (1420 mm) (see Fig. 30(a)) shall have wall-mounted water closets. If the depth of a standard toilet stall is increased at least 3 in (75 mm), then a floor-mounted water closet may be used. Arrangements shown for standard toilet stalls may be reversed to allow either a left- or right-hand approach. Additional stalls shall be provided in conformance with 4.22.4.

EXCEPTION: In instances of alteration work where provision of a standard stall (Fig. 30(a)) is technically infeasible or where plumbing code requirements prevent combining existing stalls to provide space, either alternate stall (Fig. 30(b)) may be provided in lieu of the standard stall.

4.17.4 Toe Clearances. In standard stalls, the front partition and at least one side partition shall provide a toe clearance of at least 9 in (230 mm) above the floor. If the depth of the stall is greater than 60 in (1525 mm), then the toe clearance is not required.

4.17.5* Doors. Toilet stall doors, *including door hardware,* shall comply with 4.13. *If toilet stall approach is from the latch side of the stall door, clearance between the door side of the*

4.17 Toilet Stalls

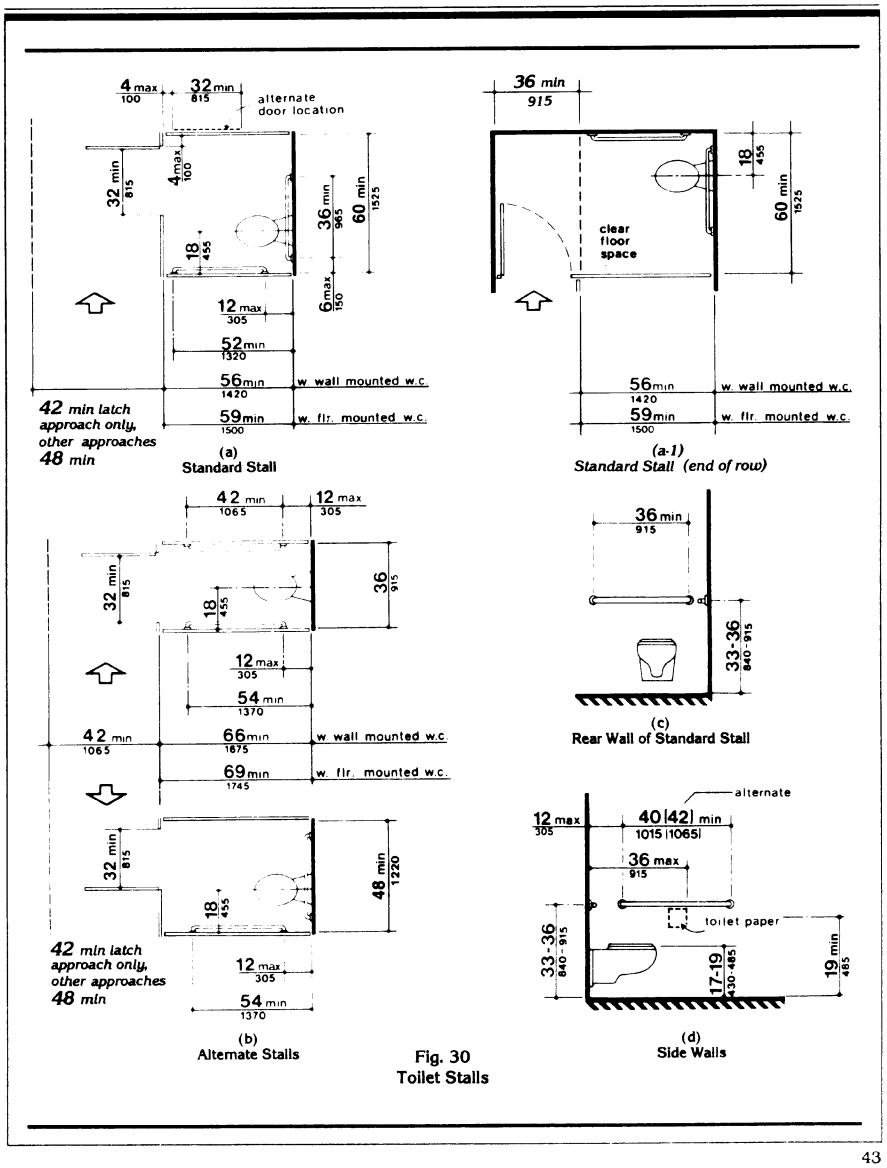

Fig. 30
Toilet Stalls

43

4.19 Lavatories and Mirrors

stall and any obstruction may be reduced to a minimum of 42 in (1065 mm) (Fig. 30).

4.17.6 Grab Bars. Grab bars complying with the length and positioning shown in Fig. 30(a), (b), (c), and (d) shall be provided. Grab bars may be mounted with any desired method as long as they have a gripping surface at the locations shown and do not obstruct the required clear floor area. Grab bars shall comply with 4.26.

4.18 Urinals.

4.18.1 General. Accessible urinals shall comply with 4.18.

4.18.2 Height. Urinals shall be stall-type or wall-hung with an elongated rim at a maximum of 17 in (430 mm) above the finish floor.

4.18.3 Clear Floor Space. A clear floor space 30 in by 48 in (760 mm by 1220 mm) shall be provided in front of urinals to allow forward approach. This clear space shall adjoin or overlap an accessible route and shall comply with 4.2.4. *Urinal shields that do not extend beyond the front edge of the urinal rim may be provided with 29 in (735 mm) clearance between them.*

4.18.4 Flush Controls. Flush controls shall be hand operated or automatic, and shall comply with 4.27.4, and shall be mounted no more than 44 in (1120 mm) above the finish floor.

4.19 Lavatories and Mirrors.

4.19.1 General. The requirements of 4.19 shall apply to lavatory fixtures, vanities, and built-in lavatories.

4.19.2 Height and Clearances. Lavatories shall be mounted with *the rim or counter surface no higher than 34 in (865 mm) above the finish floor.* Provide a clearance of at least 29 in (735 mm) above the finish floor to the bottom of the apron. Knee and toe clearance shall comply with Fig. 31.

4.19.3 Clear Floor Space. A clear floor space 30 in by 48 in (760 mm by 1220 mm) complying with 4.2.4 shall be provided in front of a lavatory to allow forward approach. Such clear floor space shall adjoin or overlap an accessible route and shall extend a maximum of 19 in (485 mm) underneath the lavatory (see Fig. 32).

4.19.4 Exposed Pipes and Surfaces. Hot water and drain pipes under lavatories shall be insulated or otherwise *configured to protect against contact.* There shall be no sharp or abrasive surfaces under lavatories.

4.19.5 Faucets. Faucets shall comply with 4.27.4. Lever-operated, push-type, and electronically controlled mechanisms are examples of acceptable designs. *If* self-closing valves are

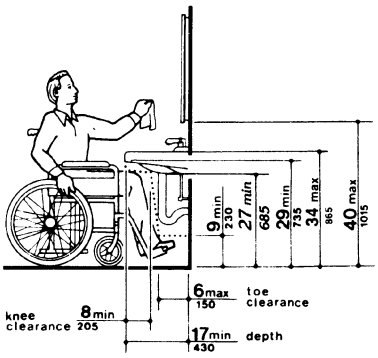

Fig. 31
Lavatory Clearances

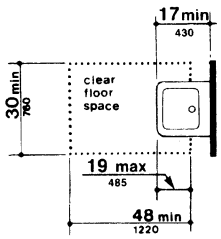

Fig. 32
Clear Floor Space at Lavatories

used the faucet *shall remain* open for at least 10 seconds.

4.19.6* Mirrors. Mirrors shall be mounted with the bottom edge *of the reflecting surface* no higher than 40 in (1015 mm) *above the finish* floor (see Fig. 31).

4.20 Bathtubs.

4.20.1 General. Accessible bathtubs shall comply with 4.20.

4.20.2 Floor Space. Clear floor space in front of bathtubs shall be as shown in Fig. 33.

4.20.3 Seat. An in-tub seat or a seat at the head end of the tub shall be provided as shown in Fig. 33 and 34. The structural strength of seats and their attachments shall comply with 4.26.3. Seats shall be mounted securely and shall not slip during use.

4.20.4 Grab Bars. Grab bars complying with 4.26 shall be provided as shown in Fig. 33 and 34.

4.20.5 Controls. Faucets and other controls complying with 4.27.4 shall be located as shown in Fig. 34.

4.20.6 Shower Unit. A shower spray unit with a hose at least 60 in (1525 mm) long that can be used *both* as a fixed shower head *and* as a hand-held shower shall be provided.

4.20.7 Bathtub Enclosures. If provided, enclosures for bathtubs shall not obstruct controls or transfer from wheelchairs onto bathtub seats or into tubs. Enclosures on bathtubs shall not have tracks mounted on their rims.

4.21 Shower Stalls.

4.21.1* General. Accessible shower stalls shall comply with 4.21.

4.21.2 Size and Clearances. Except as specified in 9.1.2, shower stall size and clear floor space shall comply with Fig. 35(a) or (b). The shower stall in Fig. 35(a) shall be 36 in by 36 in (915 mm by 915 mm). Shower stalls required by 9.1.2 shall comply with Fig. 57(a) or (b). The shower stall in Fig. 35(b) will fit into the space required for a bathtub.

4.21.3 Seat. A seat shall be provided in shower stalls 36 in by 36 in (915 mm by 915 mm) and shall be as shown in Fig. 36. The seat shall be mounted 17 in to 19 in (430 mm to 485 mm) from the bathroom floor and shall extend the full depth of the stall. In a 36 in by 36 in (915 mm by 915 mm) shower stall, the seat shall be on the wall opposite the controls. *Where a fixed seat is provided in a 30 in by 60 in minimum (760 mm by 1525 mm) shower stall, it shall be a folding type and shall be mounted on the wall adjacent to the controls as shown in Fig. 57.* The structural strength of seats and their attachments shall comply with 4.26.3.

4.21.4 Grab Bars. Grab bars complying with 4.26 shall be provided as shown in Fig. 37.

4.21.5 Controls. Faucets and other controls complying with 4.27.4 shall be located as shown in Fig. 37. In shower stalls 36 in by 36 in (915 mm by 915 mm), all controls, faucets, and the shower unit shall be mounted on the side wall opposite the seat.

4.21.6 Shower Unit. A shower spray unit with a hose at least 60 in (1525 mm) long that can be used *both* as a fixed shower head *and* as a hand-held shower shall be provided.

EXCEPTION: In unmonitored facilities where vandalism is a consideration, a fixed shower head mounted at 48 in (1220 mm) above the shower floor may be used in lieu of a hand-held shower head.

4.21.7 Curbs. If provided, curbs in shower stalls 36 in by 36 in (915 mm by 915 mm) shall be no higher than *1/2 in (13 mm)*. Shower stalls that are 30 in by 60 in (760 mm by 1525 mm) minimum shall not have curbs.

4.21.8 Shower Enclosures. If provided, enclosures for shower stalls shall not obstruct controls or obstruct transfer from wheelchairs onto shower seats.

4.22 Toilet Rooms.

4.22.1 Minimum Number. *Toilet facilities required to be accessible by 4.1 shall comply*

4.21 Shower Stalls

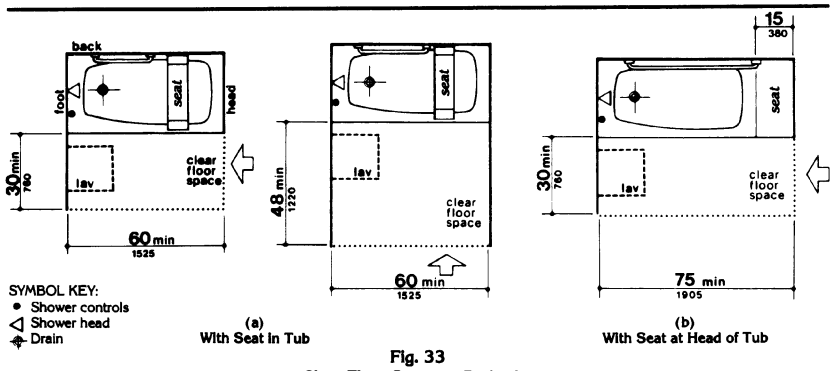

(a)
With Seat in Tub

(b)
With Seat at Head of Tub

Fig. 33
Clear Floor Space at Bathtubs

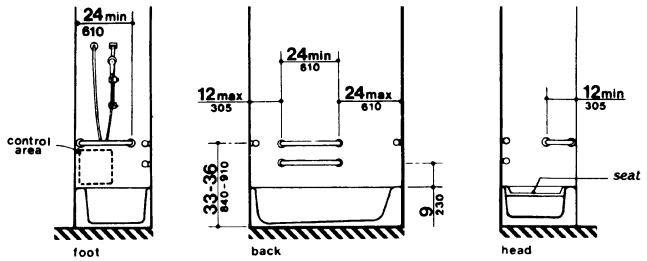

(a)
With Seat in Tub

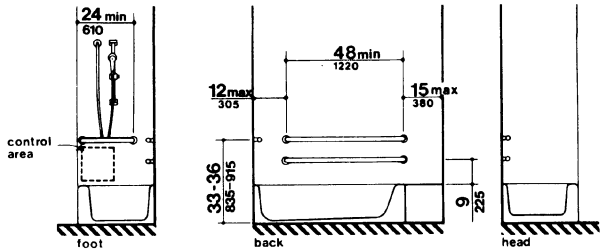

(b)
With Seat at Head of Tub

Fig. 34
Grab Bars at Bathtubs

46

with 4.22. Accessible toilet rooms shall be on an accessible route.

4.22.2 Doors. All doors to accessible toilet rooms shall comply with 4.13. Doors shall not swing into the clear floor space required for any fixture.

4.22.3* Clear Floor Space. The accessible fixtures and controls required in 4.22.4, 4.22.5, 4.22.6, and 4.22.7 shall be on an accessible route. An unobstructed turning space complying with 4.2.3 shall be provided within an accessible toilet room. The clear floor space at fixtures and controls, the accessible route, and the turning space may overlap.

4.22.4 Water Closets. If toilet stalls are provided, then at least one shall be a standard toilet stall complying with 4.17; *where 6 or more stalls are provided, in addition to the stall complying with 4.17.3, at least one stall 36 in (915 mm) wide with an outward swinging, self-closing door and parallel grab bars complying with Fig. 30(d) and 4.26 shall be provided. Water closets in such stalls* shall comply with 4.16. If water closets are not in stalls, then at least one shall comply with 4.16.

4.22.5 Urinals. If urinals are provided, *then* at least one shall comply with 4.18.

4.22.6 Lavatories and Mirrors. If lavatories and mirrors are provided, *then* at least one of each shall comply with 4.19.

4.22.7 Controls and Dispensers. If controls, dispensers, receptacles, or other

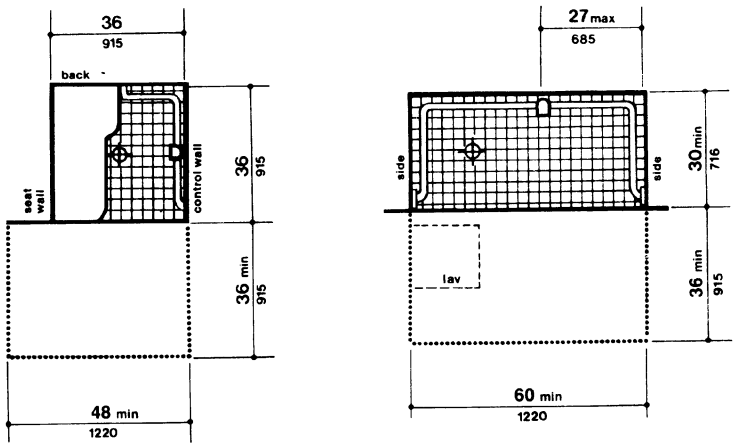

(a)
36-in by 36-in
(915-mm by 915-mm) Stall

(b)
30-in by 60-in
(760-mm by 1525-mm) Stall

Fig. 35
Shower Size and Clearances

4.23 Bathrooms, Bathing Facilities, and Shower Rooms

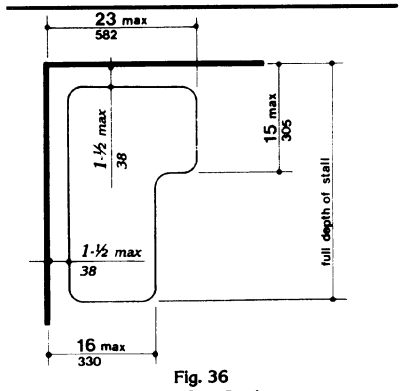

Fig. 36
Shower Seat Design

equipment are provided, *then* at least one of each shall be on an accessible route and shall comply with 4.27.

4.23 Bathrooms, Bathing Facilities, and Shower Rooms.

4.23.1 Minimum Number. Bathrooms, bathing facilities, or shower rooms *required to be accessible by 4.1* shall comply with 4.23 and shall be on an accessible route.

4.23.2 Doors. Doors to accessible bathrooms shall comply with 4.13. Doors shall not swing into the floor space required for any fixture.

4.23.3* Clear Floor Space. The accessible fixtures and controls required in 4.23.4, 4.23.5, 4.23.6, 4.23.7, 4.23.8, and 4.23.9 shall be on an accessible route. An unobstructed turning

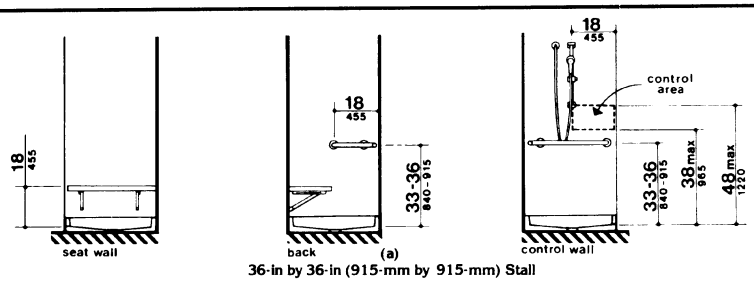

(a)
36-in by 36-in (915-mm by 915-mm) Stall

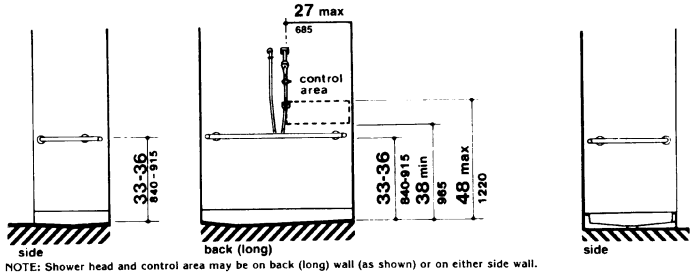

NOTE: Shower head and control area may be on back (long) wall (as shown) or on either side wall.

(b)
30-in by 60-in (760-mm by 1525-mm) Stall

Fig. 37
Grab Bars at Shower Stalls

48

space complying with 4.2.3 shall be provided within an accessible bathroom. The clear floor spaces at fixtures and controls, the accessible route, and the turning space may overlap.

4.23.4 Water Closets. If toilet stalls are provided, then at least one shall be a standard toilet stall complying with 4.17; *where 6 or more stalls are provided, in addition to the stall complying with 4.17.3, at least one stall 36 in (915 mm) wide with an outward swinging, self-closing door and parallel grab bars complying with Fig. 30(d) and 4.26 shall be provided. Water closets in such stalls* shall comply with 4.16. If water closets are not in stalls, then at least one shall comply with 4.16.

4.23.5 Urinals. If urinals are provided, then at least one shall comply with 4.18.

4.23.6 Lavatories and Mirrors. If lavatories and mirrors are provided, then at least one of each shall comply with 4.19.

4.23.7 Controls and Dispensers. If controls, dispensers, receptacles, or other equipment *are* provided, *then* at least one of each shall be on an accessible route and shall comply with 4.27.

4.23.8 Bathing and Shower Facilities. If tubs or showers are provided, then at least one accessible tub that complies with 4.20 or at least one accessible shower that complies with 4.21 shall be provided.

4.23.9* Medicine Cabinets. If medicine cabinets are provided, at least one shall be located with a usable shelf no higher than 44 in (1120 mm) above the floor space. The floor space shall comply with 4.2.4.

4.24 Sinks.

4.24.1 General. Sinks *required to be accessible by 4.1* shall comply with 4.24.

4.24.2 Height. Sinks shall be mounted with the counter or rim no higher than 34 in (865 mm) *above the finish* floor.

4.24.3 Knee Clearance. Knee clearance that is at least 27 in (685 mm) high, 30 in (760 mm) wide, and 19 in (485 mm) deep shall be provided underneath sinks.

4.24.4 Depth. Each sink shall be a maximum of 6-1/2 in (165 mm) deep.

4.24.5 Clear Floor Space. A clear floor space at least 30 in by 48 in (760 mm by 1220 mm) complying with 4.2.4 shall be provided in front of a sink to allow forward approach. The clear floor space shall be on an accessible route and shall extend a maximum of 19 in (485 mm) underneath the sink (see Fig. 32).

4.24.6 Exposed Pipes and Surfaces. Hot water and drain pipes exposed under sinks shall be insulated or otherwise *configured so as to protect against contact.* There shall be no sharp or abrasive surfaces under sinks.

4.24.7 Faucets. Faucets shall comply with 4.27.4. Lever-operated, push-type, touch-type, or electronically controlled mechanisms are acceptable designs.

4.25 Storage.

4.25.1 General. *Fixed* storage facilities such as cabinets, shelves, closets, and drawers *required to be accessible by 4.1* shall comply with 4.25.

4.25.2 Clear Floor Space. A clear floor space at least 30 in by 48 in (760 mm by 1220 mm) complying with 4.2.4 that allows either a forward or parallel approach by a person using a wheelchair shall be provided at accessible storage facilities.

4.25.3 Height. Accessible storage spaces shall be within at least one of the reach ranges specified in 4.2.5 and 4.2.6 *(see Fig. 5 and Fig. 6).* Clothes rods or shelves shall be a maximum of 54 in (1370 mm) *above the finish* floor *for a side approach. Where the distance from the wheelchair to the clothes rod or shelf exceeds 10 in (255 mm) (as in closets without accessible doors) the height and depth to the rod or shelf shall comply with Fig. 38(a) and Fig. 38(b).*

4.25.4 Hardware. Hardware for accessible storage facilities shall comply with 4.27.4. Touch latches and U-shaped pulls are acceptable.

4.26 Handrails, Grab Bars, and Tub and Shower Seats

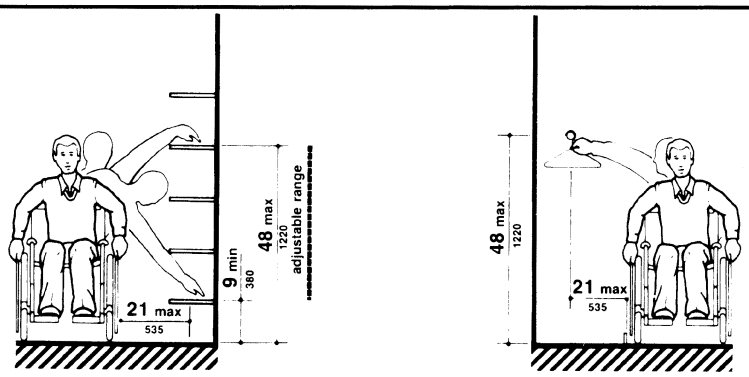

(a) Shelves *(b) Closets*

Fig. 38
Storage Shelves and Closets

4.26 Handrails, Grab Bars, and Tub and Shower Seats.

4.26.1* General. All handrails, grab bars, and tub and shower seats *required to be accessible by 4.1, 4.8, 4.9, 4.16, 4.17, 4.20 or 4.21* shall comply with 4.26.

4.26.2* Size and Spacing of Grab Bars and Handrails. The diameter or width of the gripping surfaces of a handrail or grab bar shall be 1-1/4 in to 1-1/2 in (32 mm to 38 mm), or the shape shall provide an equivalent gripping surface. If handrails or grab bars are mounted adjacent to a wall, the space between the wall and the grab bar shall be 1-1/2 in (38 mm) (see Fig. 39(a), (b), (c), and *(e)*). Handrails may be located in a recess if the recess is a maximum of 3 in (75 mm) deep and extends at least 18 in (455 mm) above the top of the rail (see Fig. 39(d)).

4.26.3 Structural Strength. The structural strength of grab bars, tub and shower seats, fasteners, and mounting devices shall meet the following specification:

(1) Bending stress in a grab bar or seat induced by the maximum bending moment from the application of 250 lbf (1112N) shall be less than the allowable stress for the material of the grab bar or seat.

(2) Shear stress induced in a grab bar or seat by the application of 250 lbf (1112N) shall be less than the allowable shear stress for the material of the grab bar or seat. If the connection between the grab bar or seat and its mounting bracket or other support is considered to be fully restrained, then direct and torsional shear stresses shall be totaled for the combined shear stress, which shall not exceed the allowable shear stress.

(3) Shear force induced in a fastener or mounting device from the application of 250 lbf (1112N) shall be less than the allowable lateral load of either the fastener or mounting device or the supporting structure, whichever is the smaller allowable load.

(4) Tensile force induced in a fastener by a direct tension force of 250 lbf (1112N) plus the maximum moment from the application of 250 lbf (1112N) shall be less than the allowable withdrawal load between the fastener and the supporting structure.

(5) Grab bars shall not rotate within their fittings.

4.26 Handrails, Grab Bars, and Tub and Shower Seats

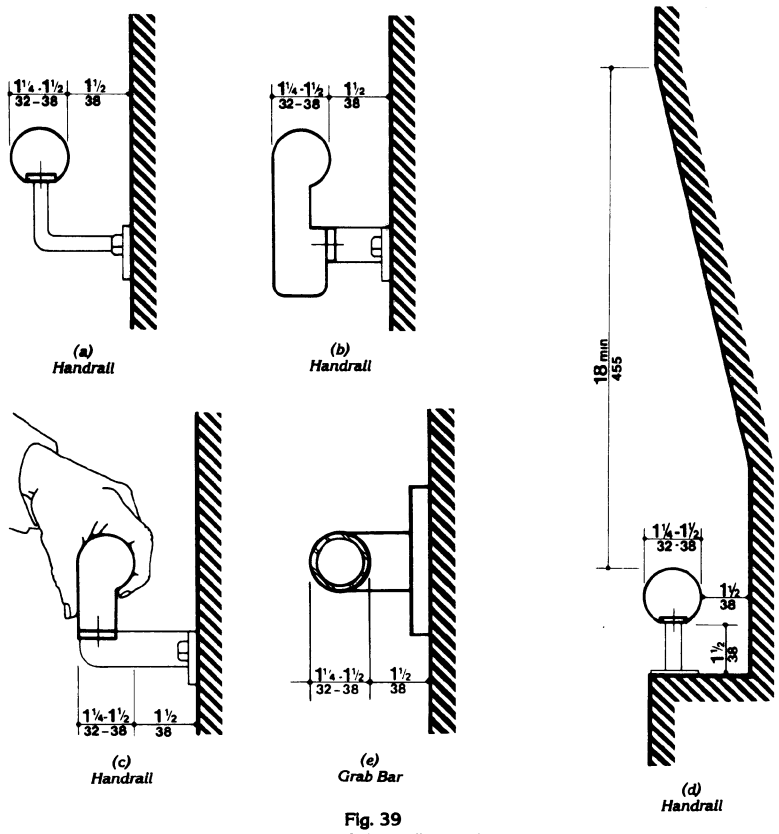

Fig. 39
Size and Spacing of Handrails and Grab Bars

4.26.4 Eliminating Hazards. A handrail or grab bar and any wall or other surface adjacent to it shall be free of any sharp or abrasive elements. Edges shall have a minimum radius of 1/8 in (3.2 mm).

4.27 Controls and Operating Mechanisms.

4.27.1 General. Controls and operating mechanisms *required to be accessible by 4.1* shall comply with 4.27.

4.27.2 Clear Floor Space. Clear floor space complying with 4.2.4 that allows a forward or a parallel approach by a person using a wheelchair shall be provided at controls, dispensers, receptacles, and other operable equipment.

4.27.3* Height. The highest operable part of controls, dispensers, receptacles, and other operable equipment shall be placed within at least one of the reach ranges specified in 4.2.5 and 4.2.6. Electrical and communications system receptacles on walls shall be mounted no less than 15 in (380 mm) above the floor.

EXCEPTION: These requirements do not apply where the use of special equipment dictates otherwise or where electrical and communications systems receptacles are not normally intended for use by building occupants.

4.27.4 Operation. Controls and operating mechanisms shall be operable with one hand and shall not require tight grasping, pinching, or twisting of the wrist. The force required to activate controls shall be no greater than 5 lbf (22.2 N).

4.28 Alarms.

4.28.1 General. *Alarm systems required to be accessible by 4.1 shall comply with 4.28. At a minimum, visual signal appliances shall be provided in buildings and facilities in each of the following areas: restrooms and any other general usage areas (e.g., meeting rooms), hallways, lobbies, and any other area for common use.*

4.28.2* Audible Alarms. If provided, audible emergency alarms shall produce a sound that exceeds the prevailing equivalent sound level in the room or space by at least 15 *dbA* or exceeds any maximum sound level with a duration of 60 seconds by 5 *dbA*, whichever is louder. Sound levels for alarm signals shall not exceed 120 *dbA*.

4.28.3* Visual Alarms. *Visual alarm signal appliances shall be integrated into the building or facility alarm system. If single station audible alarms are provided then single station visual alarm signals shall be provided. Visual alarm signals shall have the following minimum photometric and location features:*

(1) The lamp shall be a xenon strobe type or equivalent.

(2) The color shall be clear or nominal white (i.e., unfiltered or clear filtered white light).

(3) The maximum pulse duration shall be two-tenths of one second (0.2 sec) with a maximum duty cycle of 40 percent. The pulse duration is defined as the time interval between initial and final points of 10 percent of maximum signal.

(4) The intensity shall be a minimum of 75 candela.

(5) The flash rate shall be a minimum of 1 Hz and a maximum of 3 Hz.

(6) The appliance shall be placed 80 in (2030 mm) above the highest floor level within the space or 6 in (152 mm) below the ceiling, whichever is lower.

(7) In general, no place in any room or space required to have a visual signal appliance shall be more than 50 ft (15 m) from the signal (in the horizontal plane). In large rooms and spaces exceeding 100 ft (30 m) across, without obstructions 6 ft (2 m) above the finish floor, such as auditoriums, devices may be placed around the perimeter, spaced a maximum 100 ft (30 m) apart, in lieu of suspending appliances from the ceiling.

(8) No place in common corridors or hallways in which visual alarm signalling appliances are required shall be more than 50 ft (15 m) from the signal.

4.28.4* Auxiliary Alarms. *Units and* sleeping accommodations shall have a visual alarm connected to the building emergency alarm system or shall have a standard 110-volt electrical receptacle into which such an alarm can be connected *and a means by which a signal from the building emergency alarm system can trigger such an auxiliary alarm. When visual alarms are in place the signal shall be visible in all areas of the unit or room.* Instructions for use of the auxiliary alarm or receptacle shall be provided.

4.29 *Detectable* Warnings.

4.29.1 General. *Detectable* warnings *required by 4.1 and 4.7* shall comply with 4.29.

4.29.2* *Detectable* Warnings on Walking Surfaces. *Detectable* warnings shall consist of *raised truncated domes with a diameter of nominal 0.9 in (23 mm), a height of nominal 0.2 in (5 mm) and a center-to-center spacing of nominal 2.35 in (60 mm) and* shall contrast *visually* with *adjoining surfaces, either light-on-dark, or dark-on-light.*

The material used to provide contrast shall be an integral part of the walking surface. Detectable warnings used on interior surfaces shall differ from adjoining walking surfaces in resiliency or sound-on-cane contact.

4.29.3 *Detectable* Warnings on Doors To Hazardous Areas. *(Reserved).*

4.29.4 *Detectable* Warnings at Stairs. *(Reserved).*

4.29.5 *Detectable* Warnings at Hazardous Vehicular Areas. If a walk crosses or adjoins a vehicular way, *and the walking surfaces are not separated by* curbs, railings, or other elements *between the pedestrian areas and vehicular areas*, the boundary between the areas shall be defined by a continuous *detectable* warning *which is* 36 in (915 mm) wide, complying with 4.29.2.

4.29.6 *Detectable* Warnings at Reflecting Pools. The edges of reflecting pools shall be protected by railings, walls, curbs, or *detectable* warnings complying with 4.29.2.

4.29.7 Standardization. *(Reserved).*

4.30 Signage.

4.30.1* General. Signage *required to be accessible by 4.1 shall comply with the applicable provisions of 4.30.*

4.30.2* Character Proportion. Letters and numbers on signs shall have a width-to-height ratio between 3:5 and 1:1 and a stroke-width-to-height ratio between 1:5 and 1:10.

4.30.3 *Character Height.* *Characters and numbers on signs shall be sized according to the viewing distance from which they are to be read. The minimum height is measured using an upper case X. Lower case characters are permitted.*

Height Above Finished Floor	*Minimum Character Height*
Suspended or Projected Overhead in compliance with 4.4.2	*3 in. (75 mm) minimum*

4.30.4* Raised *and Brailled* Characters *and Pictorial Symbol Signs (Pictograms).* Letters and numerals shall be raised 1/32 in, *upper case*, sans serif *or simple serif type and shall be accompanied with Grade 2 Braille.* Raised characters shall be at least 5/8 in (16 mm) high, but no higher than 2 in (50 mm). *Pictograms shall be accompanied by the equivalent verbal description placed directly below the pictogram. The border dimension of the pictogram shall be 6 in (152 mm) minimum in height.*

4.30.5* *Finish and Contrast.* *The characters and background of signs shall be eggshell, matte, or other non-glare finish.* Characters and symbols shall contrast with their background — either light characters on a dark background or dark characters on a light background.

4.30.6 *Mounting Location and Height.* *Where permanent identification is provided for rooms and spaces, signs shall be installed on the wall adjacent to the latch side of the door. Where there is no wall space to the latch side of the door, including at double leaf doors, signs shall be placed on the nearest adjacent wall. Mounting height shall be 60 in (1525 mm) above the finish floor to the centerline of the sign. Mounting location for such signage shall be so that a person may approach within 3 in (76 mm) of signage without encountering protruding objects or standing within the swing of a door.*

4.30.7* Symbols of Accessibility.

(1) Facilities and elements required to be identified as accessible by 4.1 shall use the international symbol of accessibility. The

4.30 Signage

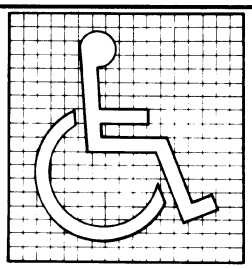

(a)
Proportions
International Symbol of Accessibility

(b)
Display Conditions
International Symbol of Accessibility

(c)
International TDD Symbol

(d)
International Symbol of Access for Hearing Loss

Fig. 43
International Symbols

symbol shall be displayed as shown in Fig. 43*(a) and (b).*

(2) Volume Control Telephones. Telephones required to have a volume control by 4.1.3(17)(b) shall be identified by a sign containing a depiction of a telephone handset with radiating sound waves.

(3) Text Telephones. Text telephones required by 4.1.3 (17)(c) shall be identified by the international TDD symbol (Fig 43(c)). In addition, if a facility has a public text telephone, directional signage indicating the location of the nearest text telephone shall be placed adjacent to all banks of telephones which do not contain a text telephone. Such directional signage shall include the international TDD symbol. If a facility has no banks of telephones, the directional signage shall be provided at the entrance (e.g., in a building directory).

(4) Assistive Listening Systems. In assembly areas where permanently installed assistive listening systems are required by 4.1.3(19)(b) the availability of such systems shall be identified with signage that includes the international symbol of access for hearing loss (Fig 43(d)).

4.30.8* Illumination Levels. *(Reserved).*

4.31 Telephones.

4.31.1 General. Public telephones *required to be accessible by 4.1* shall comply with 4.31.

4.31.2 Clear Floor or Ground Space. A clear floor or ground space at least 30 in by 48 in (760 mm by 1220 mm) that allows either a forward or parallel approach by a person using a wheelchair shall be provided at telephones (see Fig. 44). The clear floor or ground space shall comply with 4.2.4. Bases, enclosures, and fixed seats shall not impede approaches to telephones by people who use wheelchairs.

4.31.3* Mounting Height. The highest operable part of the telephone shall be within the reach ranges specified in 4.2.5 or 4.2.6.

4.31.4 *Protruding Objects.* *Telephones shall comply with 4.4.*

4.31 Telephones

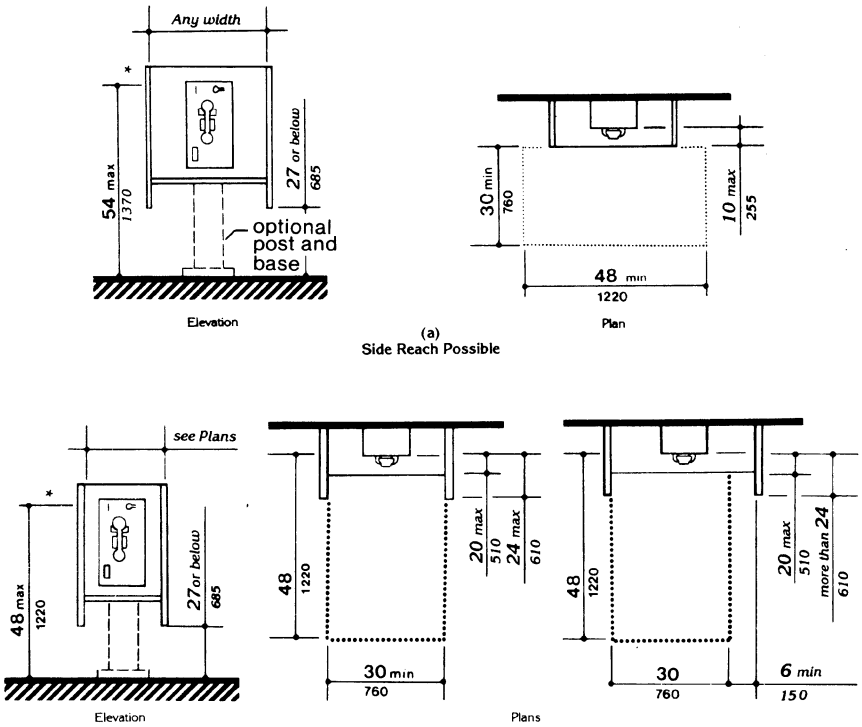

*Height to highest operable parts which are essential to basic operation of telephone.

Fig. 44
Mounting Heights and Clearances for Telephones

4.31.5 *Hearing Aid Compatible and Volume Control Telephones Required by 4.1.*

(1) Telephones shall be hearing aid compatible.

(2) Volume controls, *capable of a minimum of 12 dbA and a maximum of 18 dbA above normal, shall be provided in accordance with 4.1.3. If an automatic reset is provided then 18 dbA may be exceeded.*

4.31.6 Controls. Telephones shall have pushbutton controls where service for such equipment is available.

4.32 *Fixed or Built-in* Seating and Tables

4.31.7 Telephone Books. Telephone books, if provided, shall be located *in a position that complies with the reach ranges specified in 4.2.5 and 4.2.6.*

4.31.8 Cord Length. The cord from the telephone to the handset shall be at least 29 in (735 mm) long.

4.31.9* Text Telephones Required by 4.1.

(1) Text telephones used with a pay telephone shall be permanently affixed within, or adjacent to, the telephone enclosure. If an acoustic coupler is used, the telephone cord shall be sufficiently long to allow connection of the text telephone and the telephone receiver.

(2) Pay telephones designed to accommodate a portable text telephone shall be equipped with a shelf and an electrical outlet within or adjacent to the telephone enclosure. The telephone handset shall be capable of being placed flush on the surface of the shelf. The shelf shall be capable of accommodating a text telephone and shall have 6 in (152 mm) minimum vertical clearance in the area where the text telephone is to be placed.

(3) Equivalent facilitation may be provided. For example, a portable text telephone may be made available in a hotel at the registration desk if it is available on a 24-hour basis for use with nearby public pay telephones. In this instance, at least one pay telephone shall comply with paragraph 2 of this section. In addition, if an acoustic coupler is used, the telephone handset cord shall be sufficiently long so as to allow connection of the text telephone and the telephone receiver. Directional signage shall be provided and shall comply with 4.30.7.

4.32 *Fixed or Built-in* Seating and Tables.

4.32.1 Minimum Number. Fixed or built-in seating or tables *required to be accessible by 4.1* shall comply with 4.32.

4.32.2 Seating. If seating spaces for people in wheelchairs are provided at *fixed* tables or counters, clear floor space complying with 4.2.4 shall be provided. Such clear floor space shall not overlap knee space by more than 19 in (485 mm) (see Fig. 45).

4.32.3 Knee Clearances. If seating for people in wheelchairs is provided at tables *or* counters, knee spaces at least 27 in (685 mm) high, 30 in (760 mm) wide, and 19 in (485 mm) deep shall be provided (see Fig. 45).

4.32.4* Height of Tables or Counters. The tops of *accessible* tables and *counters* shall be from 28 in to 34 in (710 mm to 865 mm) *above the finish* floor or ground.

4.33 Assembly Areas.

4.33.1 Minimum Number. Assembly *and associated* areas *required to be accessible by 4.1 shall comply with 4.33.*

4.33.2* Size of Wheelchair Locations. Each wheelchair location shall provide minimum clear ground or floor spaces as shown in Fig. 46.

4.33.3* Placement of Wheelchair Locations. Wheelchair areas shall be an integral part of any fixed seating plan and shall be *provided so as to provide people with physical disabilities a choice of admission prices and lines of sight comparable to those for members of the general public.* They shall adjoin an accessible route that also serves as a means of egress in case of emergency. *At least one companion fixed seat shall be provided next to each wheelchair seating area. When the seating capacity exceeds 300, wheelchair spaces shall be provided in more than one location. Readily removable seats may be installed in wheelchair spaces when the spaces are not required to accommodate wheelchair users.*

EXCEPTION: Accessible viewing positions may be clustered for bleachers, balconies, and other areas having sight lines that require slopes of greater than 5 percent. Equivalent accessible viewing positions may be located on levels having accessible egress.

4.33.4 Surfaces. The ground or floor at wheelchair locations shall be level and shall comply with 4.5.

4.33 Assembly Areas

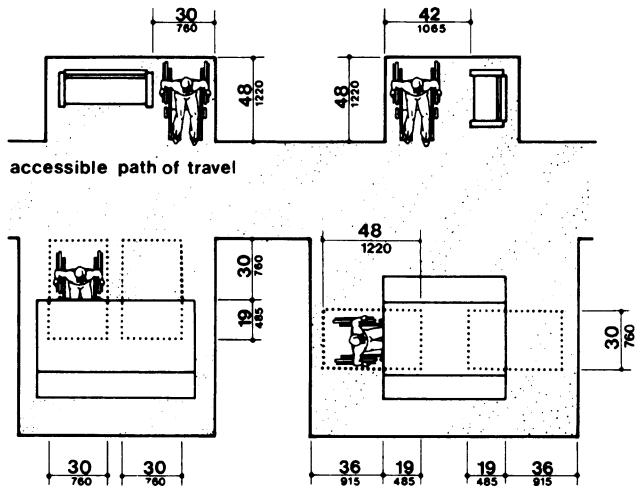

Fig. 45
Minimum Clearances for Seating and Tables

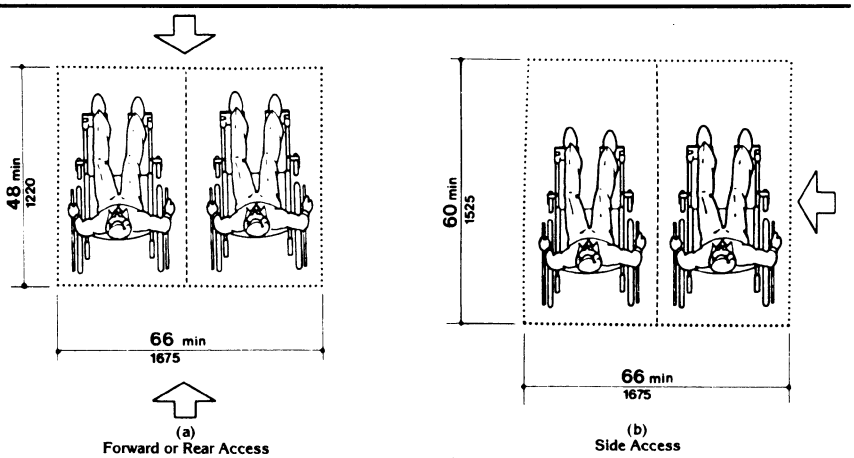

Fig. 46
Space Requirements for Wheelchair
Seating Spaces in Series

4.33.5 Access to Performing Areas

4.33.5 Access to Performing Areas. An accessible route shall connect wheelchair seating locations with performing areas, including stages, arena floors, dressing rooms, locker rooms, and other spaces used by performers.

4.33.6* Placement of Listening Systems. If the listening system provided serves individual fixed seats, then such seats shall be located within a 50 ft (15 m) viewing distance of the stage or playing area and shall have a complete view of the stage or playing area.

4.33.7* Types of Listening Systems. *Assistive listening systems (ALS) are intended to augment standard public address and audio systems by providing signals which can be received directly by persons with special receivers or their own hearing aids and which eliminate or filter background noise. The type of assistive listening system appropriate for a particular application depends on the characteristics of the setting, the nature of the program, and the intended audience. Magnetic induction loops, infra-red and radio frequency systems are types of listening systems which are appropriate for various applications.*

4.34 Automated Teller Machines.

4.34.1 General. *Each automated teller machine required to be accessible by 4.1.3 shall be on an accessible route and shall comply with 4.34.*

4.34.2 Clear Floor Space. *The automated teller machine shall be located so that clear floor space complying with 4.2.4 is provided to allow a person using a wheelchair to make a forward approach, a parallel approach, or both, to the machine.*

4.34.3 Reach Ranges.

(1) Forward Approach Only. If only a forward approach is possible, operable parts of all controls shall be placed within the forward reach range specified in 4.2.5.

(2) Parallel Approach Only. If only a parallel approach is possible, operable parts of controls shall be placed as follows:

(a) Reach Depth Not More Than 10 in (255 mm). Where the reach depth to the operable parts of all controls as measured from the vertical plane perpendicular to the edge of the unobstructed clear floor space at the farthest protrusion of the automated teller machine or surround is not more than 10 in (255 mm), the maximum height above the finished floor or grade shall be 54 in (1370 mm).

(b) Reach Depth More Than 10 in (255 mm). Where the reach depth to the operable parts of any control as measured from the vertical plane perpendicular to the edge of the unobstructed clear floor space at the farthest protrusion of the automated teller machine or surround is more than 10 in (255 mm), the maximum height above the finished floor or grade shall be as follows:

Reach Depth		***Maximum Height***	
In	*Mm*	*In*	*Mm*
10	*255*	*54*	*1370*
11	*280*	*53½*	*1360*
12	*305*	*53*	*1345*
13	*330*	*52½*	*1335*
14	*355*	*51½*	*1310*
15	*380*	*51*	*1295*
16	*405*	*50½*	*1285*
17	*430*	*50*	*1270*
18	*455*	*49½*	*1255*
19	*485*	*49*	*1245*
20	*510*	*48½*	*1230*
21	*535*	*47½*	*1205*
22	*560*	*47*	*1195*
23	*585*	*46½*	*1180*
24	*610*	*46*	*1170*

(3) Forward and Parallel Approach. If both a forward and parallel approach are possible, operable parts of controls shall be placed within at least one of the reach ranges in paragraphs (1) or (2) of this section.

(4) Bins. Where bins are provided for envelopes, waste paper, or other purposes, at least one of each type provided shall comply with the applicable reach ranges in paragraph (1), (2), or (3) of this section.

EXCEPTION: Where a function can be performed in a substantially equivalent manner by using an alternate control, only one of the controls needed to perform that function is required to comply with this section. If the controls are identified by tactile markings, such markings shall be provided on both controls.

4.34.4 Controls. *Controls for user activation shall comply with 4.27.4.*

4.34.5 Equipment for Persons with Vision Impairments. *Instructions and all information for use shall be made accessible to and independently usable by persons with vision impairments.*

4.35 Dressing and Fitting Rooms.

4.35.1 General. *Dressing and fitting rooms required to be accessible by 4.1 shall comply with 4.35 and shall be on an accessible route.*

4.35.2 Clear Floor Space. *A clear floor space allowing a person using a wheelchair to make a 180-degree turn shall be provided in every accessible dressing room entered through a swinging or sliding door. No door shall swing into any part of the turning space. Turning space shall not be required in a private dressing room entered through a curtained opening at least 32 in (815 mm) wide if clear floor space complying with section 4.2 renders the dressing room usable by a person using a wheelchair.*

4.35.3 Doors. *All doors to accessible dressing rooms shall be in compliance with section 4.13.*

4.35.4 Bench. *Every accessible dressing room shall have a 24 in by 48 in (610 mm by 1220 mm) bench fixed to the wall along the longer dimension. The bench shall be mounted 17 in to 19 in (430 mm to 485 mm) above the finish floor. Clear floor space shall be provided alongside the bench to allow a person using a wheelchair to make a parallel transfer onto the bench. The structural strength of the bench and attachments shall comply with 4.26.3. Where installed in conjunction with showers, swimming pools, or other wet locations, water shall not accumulate upon the surface of the bench and the bench shall have a slip-resistant surface.*

4.35.5 Mirror. *Where mirrors are provided in dressing rooms of the same use, then in an accessible dressing room, a full-length mirror, measuring at least 18 in wide by 54 in high (460 mm by 1370 mm), shall be mounted in a position affording a view to a person on the bench as well as to a person in a standing position.*

NOTE: Sections 4.1.1 through 4.1.7 and sections 5 through 10 are different from ANSI A117.1 in their entirety and are printed in standard type.

5. RESTAURANTS AND CAFETERIAS.

5.1* General. Except as specified or modified in this section, restaurants and cafeterias shall comply with the requirements of 4.1 to 4.35. Where fixed tables (or dining counters where food is consumed but there is no service) are provided, at least 5 percent, but not less than one, of the fixed tables (or a portion of the dining counter) shall be accessible and shall comply with 4.32 as required in 4.1.3(18). In establishments where separate areas are designated for smoking and non-smoking patrons, the required number of accessible fixed tables (or counters) shall be proportionally distributed between the smoking and non-smoking areas. In new construction, and where practicable in alterations, accessible fixed tables (or counters) shall be distributed throughout the space or facility.

5.2 Counters and Bars. Where food or drink is served at counters exceeding 34 in (865 mm) in height for consumption by customers seated on stools or standing at the counter, a portion of the main counter which is 60 in (1525 mm) in length minimum shall be provided in compliance with 4.32 or service shall be available at accessible tables within the same area.

5.3 Access Aisles. All accessible fixed tables shall be accessible by means of an access aisle at least 36 in (915 mm) clear between parallel edges of tables or between a wall and the table edges.

5.4 Dining Areas. In new construction, all dining areas, including raised or sunken dining areas, loggias, and outdoor seating areas, shall be accessible. In non-elevator buildings, an accessible means of vertical access to the mezzanine is not required under the following conditions: 1) the area of mezzanine seating measures no more than 33 percent of the area of the total accessible seating area; 2) the same services and decor are provided in an accessible space usable by the general public; and, 3) the accessible areas are not restricted to use by people with disabilities. In alterations, accessibility to raised or sunken dining areas, or to all parts of outdoor seating areas is not required provided that the same services and decor are provided in an accessible space usable by the general public and are not restricted to use by people with disabilities.

5.5 Food Service Lines. Food service lines shall have a minimum clear width of 36 in (915 mm), with a preferred clear width of 42 in (1065 mm) to allow passage around a person using a wheelchair. Tray slides shall be mounted no higher than 34 in (865 mm) above the floor (see Fig. 53). If self-service shelves

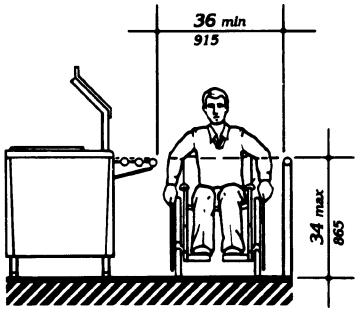

Fig. 53
Food Service Lines

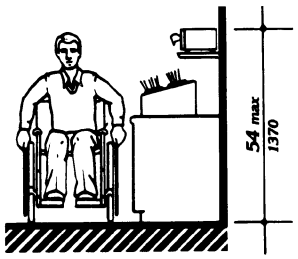

Fig. 54
Tableware Areas

6.0 Medical Care Facilities

are provided, at least 50 percent of each type must be within reach ranges specified in 4.2.5 and 4.2.6.

5.6 Tableware and Condiment Areas. Self-service shelves and dispensing devices for tableware, dishware, condiments, food and beverages shall be installed to comply with 4.2 (see Fig. 54).

5.7 Raised Platforms. In banquet rooms or spaces where a head table or speaker's lectern is located on a raised platform, the platform shall be accessible in compliance with 4.8 or 4.11. Open edges of a raised platform shall be protected by placement of tables or by a curb.

5.8 Vending Machines and Other Equipment. Spaces for vending machines and other equipment shall comply with 4.2 and shall be located on an accessible route.

5.9 Quiet Areas. (Reserved).

6. MEDICAL CARE FACILITIES.

6.1 General. Medical care facilities included in this section are those in which people receive physical or medical treatment or care and where persons may need assistance in responding to an emergency and where the period of stay may exceed twenty-four hours. In addition to the requirements of 4.1 through 4.35, medical care facilities and buildings shall comply with 6.

(1) Hospitals - general purpose hospitals, psychiatric facilities, detoxification facilities — At least 10 percent of patient bedrooms and toilets, and all public use and common use areas are required to be designed and constructed to be accessible.

(2) Hospitals and rehabilitation facilities that specialize in treating conditions that affect mobility, or units within either that specialize in treating conditions that affect mobility — All patient bedrooms and toilets, and all public use and common use areas are required to be designed and constructed to be accessible.

(3) Long term care facilities, nursing homes — At least 50 percent of patient bedrooms and toilets, and all public use and common use areas are required to be designed and constructed to be accessible.

(4) Alterations to patient bedrooms.

(a) When patient bedrooms are being added or altered as part of a planned renovation of an entire wing, a department, or other discrete area of an existing medical facility, a percentage of the patient bedrooms that are being added or altered shall comply with 6.3. The percentage of accessible rooms provided shall be consistent with the percentage of rooms required to be accessible by the applicable requirements of 6.1(1), 6.1(2), or 6.1(3), until the number of accessible patient bedrooms in the facility equals the overall number that would be required if the facility were newly constructed. (For example, if 20 patient bedrooms are being altered in the obstetrics department of a hospital, 2 of the altered rooms must be made accessible. If, within the same hospital, 20 patient bedrooms are being altered in a unit that specializes in treating mobility impairments, all of the altered rooms must be made accessible.) Where toilet/bath rooms are part of patient bedrooms which are added or altered and required to be accessible, each such patient toilet/bathroom shall comply with 6.4.

(b) When patient bedrooms are being added or altered individually, and not as part of an alteration of the entire area, the altered patient bedrooms shall comply with 6.3, unless either: a) the number of accessible rooms provided in the department or area containing the altered patient bedroom equals the number of accessible patient bedrooms that would be required if the percentage requirements of 6.1(1), 6.1(2), or 6.1(3) were applied to that department or area; or b) the number of accessible patient bedrooms in the facility equals the overall number that would be required if the facility were newly constructed. Where toilet/bathrooms are part of patient bedrooms which are added or altered and required to be accessible, each such toilet/bathroom shall comply with 6.4.

6.2 Entrances. At least one accessible entrance that complies with 4.14 shall be protected from the weather by canopy or roof overhang. Such entrances shall incorporate a passenger loading zone that complies with 4.6.6.

6.3 Patient Bedrooms. Provide accessible patient bedrooms in compliance with 4.1 through 4.35. Accessible patient bedrooms shall comply with the following:

(1) Each bedroom shall have a door that complies with 4.13.

EXCEPTION: Entry doors to acute care hospital bedrooms for in-patients shall be exempted from the requirement in 4.13.6 for maneuvering space at the latch side of the door if the door is at least 44 in (1120 mm) wide.

(2) Each bedroom shall have adequate space to provide a maneuvering space that complies with 4.2.3. In rooms with 2 beds, it is preferable that this space be located between beds.

(3) Each bedroom shall have adequate space to provide a minimum clear floor space of 36 in (915 mm) along each side of the bed and to provide an accessible route complying with 4.3.3 to each side of each bed.

6.4 Patient Toilet Rooms. Where toilet/bath rooms are provided as a part of a patient bedroom, each patient bedroom that is required to be accessible shall have an accessible toilet/bath room that complies with 4.22 or 4.23 and shall be on an accessible route.

7. BUSINESS AND MERCANTILE.

7.1 General. In addition to the requirements of 4.1 to 4.35, the design of all areas used for business transactions with the public shall comply with 7.

7.2 Sales and Service Counters, Teller Windows, Information Counters.

(1) In department stores and miscellaneous retail stores where counters have cash registers and are provided for sales or distribution of goods or services to the public, at least one of each type shall have a portion of the counter which is at least 36 in (915 mm) in length with a maximum height of 36 in (915 mm) above the finish floor. It shall be on an accessible route complying with 4.3. The accessible counters must be dispersed throughout the building or facility. In alterations where it is technically infeasible to provide an accessible counter, an auxiliary counter meeting these requirements may be provided.

(2) At ticketing counters, teller stations in a bank, registration counters in hotels and motels, box office ticket counters, and other counters that may not have a cash register but at which goods or services are sold or distributed, either:

(i) a portion of the main counter which is a minimum of 36 in (915 mm) in length shall be provided with a maximum height of 36 in (915 mm); or

(ii) an auxiliary counter with a maximum height of 36 in (915 mm) in close proximity to the main counter shall be provided; or

(iii) equivalent facilitation shall be provided (e.g., at a hotel registration counter, equivalent facilitation might consist of: (1) provision of a folding shelf attached to the main counter on which an individual with disabilities can write, and (2) use of the space on the side of the counter or at the concierge desk, for handing materials back and forth).

All accessible sales and service counters shall be on an accessible route complying with 4.3.

(3)* Assistive Listening Devices. (Reserved)

7.3* Check-out Aisles.

(1) In new construction, accessible check-out aisles shall be provided in conformance with the table below:

Total Check-out Aisles of Each Design	Minimum Number of Accessible Check-out Aisles (of each design)
1 - 4	1
5 - 8	2
9 - 15	3
over 15	3, plus 20% of additional aisles

EXCEPTION: In new construction, where the selling space is under 5000 square feet, only one check-out aisle is required to be accessible.

EXCEPTION: In alterations, at least one check-out aisle shall be accessible in facilities under 5000 square feet of selling space. In facilities of 5000 or more square feet of selling space, at least one of each design of check-out aisle shall be made accessible when altered until the number of accessible check-out aisles of each design equals the number required in new construction.

Examples of check-out aisles of different "design" include those which are specifically designed to serve different functions. Different "design" includes but is not limited to the following features - length of belt or no belt; or permanent signage designating the aisle as an express lane.

(2) Clear aisle width for accessible check-out aisles shall comply with 4.2.1 and maximum adjoining counter height shall not exceed 38 in (965 mm) above the finish floor. The top of the lip shall not exceed 40 in (1015 mm) above the finish floor.

(3) Signage identifying accessible check-out aisles shall comply with 4.30.7 and shall be mounted above the check-out aisle in the same location where the check-out number or type of check-out is displayed.

7.4 Security Bollards. Any device used to prevent the removal of shopping carts from store premises shall not prevent access or egress to people in wheelchairs. An alternate entry that is equally convenient to that provided for the ambulatory population is acceptable.

8. LIBRARIES.

8.1 General. In addition to the requirements of 4.1 to 4.35, the design of all public areas of a library shall comply with 8, including reading and study areas, stacks, reference rooms, reserve areas, and special facilities or collections.

8.2 Reading and Study Areas. At least 5 percent or a minimum of one of each element of fixed seating, tables, or study carrels shall comply with 4.2 and 4.32. Clearances between fixed accessible tables and between study carrels shall comply with 4.3.

8.3 Check-Out Areas. At least one lane at each check-out area shall comply with 7.2(1). Any traffic control or book security gates or turnstiles shall comply with 4.13.

8.4 Card Catalogs and Magazine Displays. Minimum clear aisle space at card catalogs and magazine displays shall comply with Fig. 55. Maximum reach height shall comply with 4.2, with a height of 48 in (1220 mm) preferred irrespective of approach allowed.

8.5 Stacks. Minimum clear aisle width between stacks shall comply with 4.3, with a minimum clear aisle width of 42 in (1065 mm) preferred where possible. Shelf height in stack areas is unrestricted (see Fig. 56).

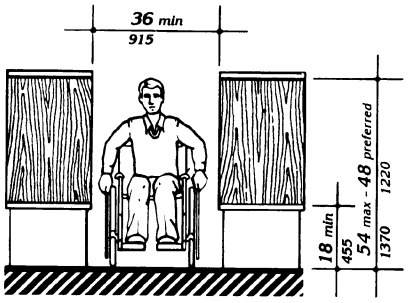

Fig. 55
Card Catalog

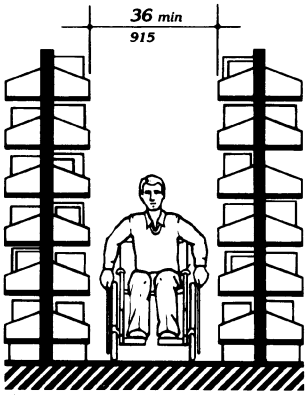

Fig. 56
Stacks

9. ACCESSIBLE TRANSIENT LODGING.

(1) Except as specified in the special technical provisions of this section, accessible transient lodging shall comply with the applicable requirements of 4.1 through 4.35. Transient lodging includes facilities or portions thereof used for sleeping accommodations, when not classed as a medical care facility.

9.1 Hotels, Motels, Inns, Boarding Houses, Dormitories, Resorts and Other Similar Places of Transient Lodging.

9.1.1 General. All public use and common use areas are required to be designed and constructed to comply with section 4 (Accessible Elements and Spaces: Scope and Technical Requirements).

EXCEPTION: Sections 9.1 through 9.4 do not apply to an establishment located within a building that contains not more than five rooms for rent or hire and that is actually occupied by the proprietor of such establishment as the residence of such proprietor.

9.1.2 Accessible Units, Sleeping Rooms, and Suites. Accessible sleeping rooms or suites that comply with the requirements of 9.2 (Requirements for Accessible Units, Sleeping Rooms, and Suites) shall be provided in conformance with the table below. In addition, in hotels, of 50 or more sleeping rooms or suites, additional accessible sleeping rooms or suites that include a roll-in shower shall also be provided in conformance with the table below. Such accommodations shall comply with the requirements of 9.2, 4.21, and Figure 57(a) or (b).

9.1.3 Sleeping Accommodations for Persons with Hearing Impairments

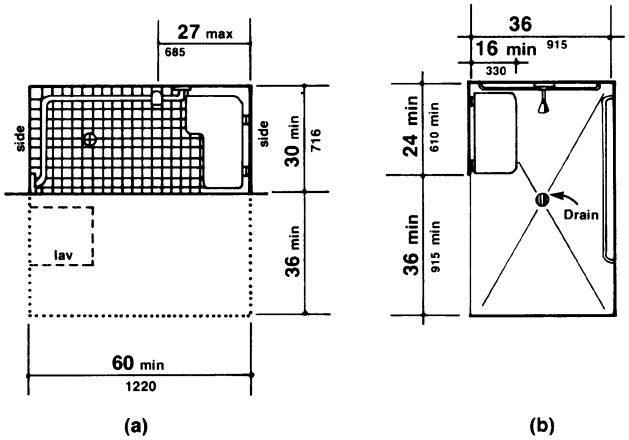

Fig. 57
Roll-in Shower with Folding Seat

Number of Rooms	Accessible Rooms	Rooms with Roll-in Showers
1 to 25	1	
26 to 50	2	
51 to 75	3	1
76 to 100	4	1
101 to 150	5	2
151 to 200	6	2
201 to 300	7	3
301 to 400	8	4
401 to 500	9	4 plus one for each additional 100 over 400
501 to 1000	2% of total	
1001 and over	20 plus 1 for each 100 over 1000	

9.1.3 Sleeping Accommodations for Persons with Hearing Impairments. In addition to those accessible sleeping rooms and suites required by 9.1.2, sleeping rooms and suites that comply with 9.3 (Visual Alarms, Notification Devices, and Telephones) shall be provided in conformance with the following table:

Number of Elements	Accessible Elements
1 to 25	1
26 to 50	2
51 to 75	3
76 to 100	4
101 to 150	5
151 to 200	6
201 to 300	7
301 to 400	8
401 to 500	9
501 to 1000	2% of total
1001 and over	20 plus 1 for each 100 over 1000

9.1.4 Classes of Sleeping Accommodations.

(1) In order to provide persons with disabilities a range of options equivalent to those available to other persons served by the facility, sleeping rooms and suites required to be accessible by 9.1.2 shall be dispersed among the various classes of sleeping accommodations available to patrons of the place of transient lodging. Factors to be considered include room size, cost, amenities provided, and the number of beds provided.

(2) Equivalent Facilitation. For purposes of this section, it shall be deemed equivalent facilitation if the operator of a facility elects to limit construction of accessible rooms to those intended for multiple occupancy, provided that such rooms are made available at the cost of a single-occupancy room to an individual with disabilities who requests a single-occupancy room.

9.1.5. Alterations to Accessible Units, Sleeping Rooms, and Suites. When sleeping rooms are being altered in an existing facility, or portion thereof, subject to the requirements of this section, at least one sleeping room or suite that complies with the requirements of 9.2 (Requirements for Accessible Units, Sleeping Rooms, and Suites) shall be provided for each 25 sleeping rooms, or fraction thereof, of rooms being altered until the number of such rooms provided equals the number required to be accessible with 9.1.2. In addition, at least one sleeping room or suite that complies with the requirements of 9.3 (Visual Alarms, Notification Devices, and Telephones) shall be provided for each 25 sleeping rooms, or fraction thereof, of rooms being altered until the number of such rooms equals the number required to be accessible by 9.1.3.

9.2 Requirements for Accessible Units, Sleeping Rooms and Suites.

9.2.1 General. Units, sleeping rooms, and suites required to be accessible by 9.1 shall comply with 9.2.

9.2.2 Minimum Requirements. An accessible unit, sleeping room or suite shall be on an accessible route complying with 4.3 and have the following accessible elements and spaces.

(1) Accessible sleeping rooms shall have a 36 in (915 mm) clear width maneuvering space located along both sides of a bed, except that where two beds are provided, this requirement can be met by providing a 36 in (915 mm) wide maneuvering space located between the two beds.

(2) An accessible route complying with 4.3 shall connect all accessible spaces and elements, including telephones, within the unit, sleeping room, or suite. This is not intended to require an elevator in multi-story units as long as the spaces identified in 9.2.2(6) and (7) are on accessible levels and the accessible sleeping area is suitable for dual occupancy.

(3) Doors and doorways designed to allow passage into and within all sleeping rooms, suites or other covered units shall comply with 4.13.

(4) If fixed or built-in storage facilities such as cabinets, shelves, closets, and drawers are provided in accessible spaces, at least one of each type provided shall contain storage space complying with 4.25. Additional storage may be provided outside of the dimensions required by 4.25.

(5) All controls in accessible units, sleeping rooms, and suites shall comply with 4.27.

(6) Where provided as part of an accessible unit, sleeping room, or suite, the following spaces shall be accessible and shall be on an accessible route:

(a) the living area.

(b) the dining area.

(c) at least one sleeping area.

(d) patios, terraces, or balconies.

EXCEPTION: The requirements of 4.13.8 and 4.3.8 do not apply where it is necessary to utilize a higher door threshold or a change in level to protect the integrity of the unit from wind/water damage. Where this exception results in patios, terraces or balconies that are not at an accessible level, equivalent facilitation

9.3 Visual Alarms, Notification Devices and Telephones

shall be provided. (E.g., equivalent facilitation at a hotel patio or balcony might consist of providing raised decking or a ramp to provide accessibility.)

(e) at least one full bathroom (i.e., one with a water closet, a lavatory, and a bathtub or shower).

(f) if only half baths are provided, at least one half bath.

(g) carports, garages or parking spaces.

(7) Kitchens, Kitchenettes, or Wet Bars. When provided as accessory to a sleeping room or suite, kitchens, kitchenettes, wet bars, or similar amenities shall be accessible. Clear floor space for a front or parallel approach to cabinets, counters, sinks, and appliances shall be provided to comply with 4.2.4. Countertops and sinks shall be mounted at a maximum height of 34 in (865 mm) above the floor. At least fifty percent of shelf space in cabinets or refrigerator/freezers shall be within the reach ranges of 4.2.5 or 4.2.6 and space shall be designed to allow for the operation of cabinet and/or appliance doors so that all cabinets and appliances are accessible and usable. Controls and operating mechanisms shall comply with 4.27.

(8) Sleeping room accommodations for persons with hearing impairments required by 9.1 and complying with 9.3 shall be provided in the accessible sleeping room or suite.

9.3 Visual Alarms, Notification Devices and Telephones.

9.3.1 General. In sleeping rooms required to comply with this section, auxiliary visual alarms shall be provided and shall comply with 4.28.4. Visual notification devices shall also be provided in units, sleeping rooms and suites to alert room occupants of incoming telephone calls and a door knock or bell. Notification devices shall not be connected to auxiliary visual alarm signal appliances. Permanently installed telephones shall have volume controls complying with 4.31.5; an accessible electrical outlet within 4 ft (1220 mm) of a telephone connection shall be provided to facilitate the use of a text telephone.

9.3.2 Equivalent Facilitation. For purposes of this section, equivalent facilitation shall include the installation of electrical outlets (including outlets connected to a facility's central alarm system) and telephone wiring in sleeping rooms and suites to enable persons with hearing impairments to utilize portable visual alarms and communication devices provided by the operator of the facility.

9.4 Other Sleeping Rooms and Suites.

Doors and doorways designed to allow passage into and within all sleeping units or other covered units shall comply with 4.13.5.

9.5 Transient Lodging in Homeless Shelters, Halfway Houses, Transient Group Homes, and Other Social Service Establishments.

9.5.1 New Construction. In new construction all public use and common use areas are required to be designed and constructed to comply with section 4. At least one of each type of amenity (such as washers, dryers and similar equipment installed for the use of occupants) in each common area shall be accessible and shall be located on an accessible route to any accessible unit or sleeping accommodation.

EXCEPTION: Where elevators are not provided as allowed in 4.1.3(5), accessible amenities are not required on inaccessible floors as long as one of each type is provided in common areas on accessible floors.

9.5.2 Alterations.

(1) Social service establishments which are not homeless shelters:

(a) The provisions of 9.5.3 and 9.1.5 shall apply to sleeping rooms and beds.

(b) Alteration of other areas shall be consistent with the new construction provisions of 9.5.1.

(2) Homeless shelters. If the following elements are altered, the following requirements apply:

(a) at least one public entrance shall allow a person with mobility impairments to approach, enter and exit including a minimum clear door width of 32 in (815 mm).

(b) sleeping space for homeless persons as provided in the scoping provisions of 9.1.2 shall include doors to the sleeping area with a minimum clear width of 32 in (815 mm) and maneuvering space around the beds for persons with mobility impairments complying with 9.2.2(1).

(c) at least one toilet room for each gender or one unisex toilet room shall have a minimum clear door width of 32 in (815 mm), minimum turning space complying with 4.2.3, one water closet complying with 4.16, one lavatory complying with 4.19 and the door shall have a privacy latch; and, if provided, at least one tub or shower shall comply with 4.20 or 4.21, respectively.

(d) at least one common area which a person with mobility impairments can approach, enter and exit including a minimum clear door width of 32 in (815 mm).

(e) at least one route connecting elements (a), (b), (c) and (d) which a person with mobility impairments can use including minimum clear width of 36 in (915 mm), passing space complying with 4.3.4, turning space complying with 4.2.3 and changes in levels complying with 4.3.8.

(f) homeless shelters can comply with the provisions of (a)-(e) by providing the above elements on one accessible floor.

9.5.3. Accessible Sleeping Accommodations in New Construction. Accessible sleeping rooms shall be provided in conformance with the table in 9.1.2 and shall comply with 9.2 Accessible Units, Sleeping Rooms and Suites (where the items are provided). Additional sleeping rooms that comply with 9.3 Sleeping Accommodations for Persons with Hearing Impairments shall be provided in conformance with the table provided in 9.1.3.

In facilities with multi-bed rooms or spaces, a percentage of the beds equal to the table provided in 9.1.2 shall comply with 9.2.2(1).

10. TRANSPORTATION FACILITIES.

10.1 General. Every station, bus stop, bus stop pad, terminal, building or other transportation facility, shall comply with the applicable provisions of 4.1 through 4.35, sections 5 through 9, and the applicable provisions of this section. The exceptions for elevators in 4.1.3(5), exception 1 and 4.1.6(1)(k) do not apply to a terminal, depot, or other station used for specified public transportation, or an airport passenger terminal, or facilities subject to Title II.

10.2 Bus Stops and Terminals.

10.2.1 New Construction.

(1) Where new bus stop pads are constructed at bus stops, bays or other areas where a lift or ramp is to be deployed, they shall have a firm, stable surface; a minimum clear length of 96 inches (measured from the curb or vehicle roadway edge) and a minimum clear width of 60 inches (measured parallel to the vehicle roadway) to the maximum extent allowed by legal or site constraints; and shall be connected to streets, sidewalks or pedestrian paths by an accessible route complying with 4.3 and 4.4. The slope of the pad parallel to the roadway shall, to the extent practicable, be the same as the roadway. For water drainage, a maximum slope of 1:50 (2%) perpendicular to the roadway is allowed.

(2) Where provided, new or replaced bus shelters shall be installed or positioned so as to permit a wheelchair or mobility aid user to enter from the public way and to reach a location, having a minimum clear floor area of 30 inches by 48 inches, entirely within the perimeter of the shelter. Such shelters shall be connected by an accessible route to the boarding area provided under paragraph (1) of this section.

(3) Where provided, all new bus route identification signs shall comply with 4.30.5. In addition, to the maximum extent practicable, all new bus route identification signs shall comply with 4.30.2 and 4.30.3. Signs

that are sized to the maximum dimensions permitted under legitimate local, state or federal regulations or ordinances shall be considered in compliance with 4.30.2 and 4.30.3 for purposes of this section.

EXCEPTION: Bus schedules, timetables, or maps that are posted at the bus stop or bus bay are not required to comply with this provision.

10.2.2 Bus Stop Siting and Alterations.

(1) Bus stop sites shall be chosen such that, to the maximum extent practicable, the areas where lifts or ramps are to be deployed comply with section 10.2.1(1) and (2).

(2) When new bus route identification signs are installed or old signs are replaced, they shall comply with the requirements of 10.2.1(3).

10.3 Fixed Facilities and Stations.

10.3.1 New Construction. New stations in rapid rail, light rail, commuter rail, intercity bus, intercity rail, high speed rail, and other fixed guideway systems (e.g., automated guideway transit, monorails, etc.) shall comply with the following provisions, as applicable:

(1) Elements such as ramps, elevators or other circulation devices, fare vending or other ticketing areas, and fare collection areas shall be placed to minimize the distance which wheelchair users and other persons who cannot negotiate steps may have to travel compared to the general public. The circulation path, including an accessible entrance and an accessible route, for persons with disabilities shall, to the maximum extent practicable, coincide with the circulation path for the general public. Where the circulation path is different, signage complying with 4.30.1, 4.30.2, 4.30.3, 4.30.5, and 4.30.7(1) shall be provided to indicate direction to and identify the accessible entrance and accessible route.

(2) In lieu of compliance with 4.1.3(8), at least one entrance to each station shall comply with 4.14, Entrances. If different entrances to a station serve different transportation fixed routes or groups of fixed routes, at least one entrance serving each group or route shall comply with 4.14, Entrances. All accessible entrances shall, to the maximum extent practicable, coincide with those used by the majority of the general public.

(3) Direct connections to commercial, retail, or residential facilities shall have an accessible route complying with 4.3 from the point of connection to boarding platforms and all transportation system elements used by the public. Any elements provided to facilitate future direct connections shall be on an accessible route connecting boarding platforms and all transportation system elements used by the public.

(4) Where signs are provided at entrances to stations identifying the station or the entrance, or both, at least one sign at each entrance shall comply with 4.30.4 and 4.30.6. Such signs shall be placed in uniform locations at entrances within the transit system to the maximum extent practicable.

EXCEPTION: Where the station has no defined entrance, but signage is provided, then the accessible signage shall be placed in a central location.

(5) Stations covered by this section shall have identification signs complying with 4.30.1, 4.30.2, 4.30.3, and 4.30.5. Signs shall be placed at frequent intervals and shall be clearly visible from within the vehicle on both sides when not obstructed by another train. When station identification signs are placed close to vehicle windows (i.e., on the side opposite from boarding) each shall have the top of the highest letter or symbol below the top of the vehicle window and the bottom of the lowest letter or symbol above the horizontal mid-line of the vehicle window.

(6) Lists of stations, routes, or destinations served by the station and located on boarding areas, platforms, or mezzanines shall comply with 4.30.1, 4.30.2, 4.30.3, and 4.30.5. A minimum of one sign identifying the specific station and complying with 4.30.4 and 4.30.6 shall be provided on each platform or boarding area. All signs referenced in this paragraph shall, to the maximum extent practicable, be placed in uniform locations within the transit system.

10.3 Fixed Facilities and Stations

(7)* Automatic fare vending, collection and adjustment (e.g., add-fare) systems shall comply with 4.34.2, 4.34.3, 4.34.4, and 4.34.5. At each accessible entrance such devices shall be located on an accessible route. If self-service fare collection devices are provided for the use of the general public, at least one accessible device for entering, and at least one for exiting, unless one device serves both functions, shall be provided at each accessible point of entry or exit. Accessible fare collection devices shall have a minimum clear opening width of 32 inches; shall permit passage of a wheelchair; and, where provided, coin or card slots and controls necessary for operation shall comply with 4.27. Gates which must be pushed open by wheelchair or mobility aid users shall have a smooth continuous surface extending from 2 inches above the floor to 27 inches above the floor and shall comply with 4.13. Where the circulation path does not coincide with that used by the general public, accessible fare collection systems shall be located at or adjacent to the accessible point of entry or exit.

(8) Platform edges bordering a drop-off and not protected by platform screens or guard rails shall have a detectable warning. Such detectable warnings shall comply with 4.29.2 and shall be 24 inches wide running the full length of the platform drop-off.

(9) In stations covered by this section, rail-to-platform height in new stations shall be coordinated with the floor height of new vehicles so that the vertical difference, measured when the vehicle is at rest, is within plus or minus 5/8 inch under normal passenger load conditions. For rapid rail, light rail, commuter rail, high speed rail, and intercity rail systems in new stations, the horizontal gap, measured when the new vehicle is at rest, shall be no greater than 3 inches. For slow moving automated guideway "people mover" transit systems, the horizontal gap in new stations shall be no greater than 1 inch.

EXCEPTION 1: Existing vehicles operating in new stations may have a vertical difference with respect to the new platform within plus or minus 1-1/2 inches.

EXCEPTION 2: In light rail, commuter rail and intercity rail systems where it is not operationally or structurally feasible to meet the horizontal gap or vertical difference requirements, mini-high platforms, car-borne or platform-mounted lifts, ramps or bridge plates, or similar manually deployed devices, meeting the applicable requirements of 36 CFR part 1192, or 49 CFR part 38 shall suffice.

(10) Stations shall not be designed or constructed so as to require persons with disabilities to board or alight from a vehicle at a location other than one used by the general public.

(11) Illumination levels in the areas where signage is located shall be uniform and shall minimize glare on signs. Lighting along circulation routes shall be of a type and configuration to provide uniform illumination.

(12) Text Telephones: The following shall be provided in accordance with 4.31.9:

(a) If an interior public pay telephone is provided in a transit facility (as defined by the Department of Transportation) at least one interior public text telephone shall be provided in the station.

(b) Where four or more public pay telephones serve a particular entrance to a rail station and at least one is in an interior location, at least one interior public text telephone shall be provided to serve that entrance. Compliance with this section constitutes compliance with section 4.1.3(17)(c).

(13) Where it is necessary to cross tracks to reach boarding platforms, the route surface shall be level and flush with the rail top at the outer edge and between the rails, except for a maximum 2-1/2 inch gap on the inner edge of each rail to permit passage of wheel flanges. Such crossings shall comply with 4.29.5. Where gap reduction is not practicable, an above-grade or below-grade accessible route shall be provided.

(14) Where public address systems are provided to convey information to the public in terminals, stations, or other fixed facilities, a means of conveying the same or equivalent information to persons with hearing loss or who are deaf shall be provided.

10.3.2 Existing Facilities: Key Stations.

(15) Where clocks are provided for use by the general public, the clock face shall be uncluttered so that its elements are clearly visible. Hands, numerals, and/or digits shall contrast with the background either light-on-dark or dark-on-light. Where clocks are mounted overhead, numerals and/or digits shall comply with 4.30.3. Clocks shall be placed in uniform locations throughout the facility and system to the maximum extent practicable.

(16) Where provided in below grade stations, escalators shall have a minimum clear width of 32 inches. At the top and bottom of each escalator run, at least two contiguous treads shall be level beyond the comb plate before the risers begin to form. All escalator treads shall be marked by a strip of clearly contrasting color, 2 inches in width, placed parallel to and on the nose of each step. The strip shall be of a material that is at least as slip resistant as the remainder of the tread. The edge of the tread shall be apparent from both ascending and descending directions.

(17) Where provided, elevators shall be glazed or have transparent panels to allow an unobstructed view both in to and out of the car. Elevators shall comply with 4.10.

EXCEPTION: Elevator cars with a clear floor area in which a 60 inch diameter circle can be inscribed may be substituted for the minimum car dimensions of 4.10, Fig. 22.

(18) Where provided, ticketing areas shall permit persons with disabilities to obtain a ticket and check baggage and shall comply with 7.2.

(19) Where provided, baggage check-in and retrieval systems shall be on an accessible route complying with 4.3, and shall have space immediately adjacent complying with 4.2. If unattended security barriers are provided, at least one gate shall comply with 4.13. Gates which must be pushed open by wheelchair or mobility aid users shall have a smooth continuous surface extending from 2 inches above the floor to 27 inches above the floor.

10.3.2 Existing Facilities: Key Stations.

(1) Rapid, light and commuter rail key stations, as defined under criteria established by the Department of Transportation in subpart C of 49 CFR part 37 and existing intercity rail stations shall provide at least one accessible route from an accessible entrance to those areas necessary for use of the transportation system.

(2) The accessible route required by 10.3.2(1) shall include the features specified in 10.3.1 (1), (4)-(9), (11)-(15), and (17)-(19).

(3) Where technical infeasibility in existing stations requires the accessible route to lead from the public way to a paid area of the transit system, an accessible fare collection system, complying with 10.3.1(7), shall be provided along such accessible route.

(4) In light rail, rapid rail and commuter rail key stations, the platform or a portion thereof and the vehicle floor shall be coordinated so that the vertical difference, measured when the vehicle is at rest, is within plus or minus 1-1/2 inches under all normal passenger load conditions, and the horizontal gap, measured when the vehicle is at rest, is no greater than 3 inches for at least one door of each vehicle or car required to be accessible by 49 CFR part 37.

EXCEPTION 1: Existing vehicles retrofitted to meet the requirements of 49 CFR 37.93 (one-car-per-train rule) shall be coordinated with the platform such that, for at least one door, the vertical difference between the vehicle floor and the platform, measured when the vehicle is at rest with 50% normal passenger capacity, is within plus or minus 2 inches and the horizontal gap is no greater than 4 inches.

EXCEPTION 2: Where it is not structurally or operationally feasible to meet the horizontal gap or vertical difference requirements, mini-high platforms, car-borne or platform mounted lifts, ramps or bridge plates, or similar manually deployed devices, meeting the applicable requirements of 36 CFR part 1192, or 49 CFR part 38, shall suffice.

(5) New direct connections to commercial, retail, or residential facilities shall, to the maximum extent feasible, have an accessible route complying with 4.3 from the point of connection to boarding platforms and all transportation system elements used by the public. Any elements provided to facilitate future direct connections shall be on an accessible route connecting boarding platforms and all transportation system elements used by the public.

10.3.3 Existing Facilities: Alterations.

(1) For the purpose of complying with 4.1.6(2) Alterations to an Area Containing a Primary Function, an area of primary function shall be as defined by applicable provisions of 49 CFR 37.43(c) (Department of Transportation's ADA Rule) or 28 CFR 36.403 (Department of Justice's ADA Rule).

10.4. Airports.

10.4.1 New Construction.

(1) Elements such as ramps, elevators or other vertical circulation devices, ticketing areas, security checkpoints, or passenger waiting areas shall be placed to minimize the distance which wheelchair users and other persons who cannot negotiate steps may have to travel compared to the general public.

(2) The circulation path, including an accessible entrance and an accessible route, for persons with disabilities shall, to the maximum extent practicable, coincide with the circulation path for the general public. Where the circulation path is different, directional signage complying with 4.30.1, 4.30.2, 4.30.3 and 4.30.5 shall be provided which indicates the location of the nearest accessible entrance and its accessible route.

(3) Ticketing areas shall permit persons with disabilities to obtain a ticket and check baggage and shall comply with 7.2.

(4) Where public pay telephones are provided, and at least one is at an interior location, a public text telephone shall be provided in compliance with 4.31.9. Additionally, if four or more public pay telephones are located in any of the following locations, at least one public text telephone shall also be provided in that location:

(a) a main terminal outside the security areas;
(b) a concourse within the security areas; or
(c) a baggage claim area in a terminal.

Compliance with this section constitutes compliance with section 4.1.3(17)(c).

(5) Baggage check-in and retrieval systems shall be on an accessible route complying with 4.3, and shall have space immediately adjacent complying with 4.2.4. If unattended security barriers are provided, at least one gate shall comply with 4.13. Gates which must be pushed open by wheelchair or mobility aid users shall have a smooth continuous surface extending from 2 inches above the floor to 27 inches above the floor.

(6) Terminal information systems which broadcast information to the general public through a public address system shall provide a means to provide the same or equivalent information to persons with a hearing loss or who are deaf. Such methods may include, but are not limited to, visual paging systems using video monitors and computer technology. For persons with certain types of hearing loss such methods may include, but are not limited to, an assistive listening system complying with 4.33.7.

(7) Where clocks are provided for use by the general public the clock face shall be uncluttered so that its elements are clearly visible. Hands, numerals, and/or digits shall contrast with their background either light-on-dark or dark-on-light. Where clocks are mounted overhead, numerals and/or digits shall comply with 4.30.3. Clocks shall be placed in uniform locations throughout the facility to the maximum extent practicable.

(8) Security Systems. [Reserved]

10.5 Boat and Ferry Docks.

[Reserved]

APPENDIX

This appendix contains *materials of an advisory nature* and provides additional information that should help the reader to understand the minimum requirements of the *guidelines* or to design buildings or facilities for greater accessibility. The paragraph numbers correspond to the sections or paragraphs of the *guideline* to which the material relates and are therefore not consecutive (for example, A4.2.1 contains additional information relevant to 4.2.1). Sections *of the guidelines* for which additional material appears in this appendix have been indicated by an asterisk. *Nothing in this appendix shall in any way obviate any obligation to comply with the requirements of the guidelines itself.*

A2.2 Equivalent Facilitation. *Specific examples of equivalent facilitation are found in the following sections:*

4.1.6(3)(c)	*Elevators in Alterations*
4.31.9	*Text Telephones*
7.2	*Sales and Service Counters, Teller Windows, Information Counters*
9.1.4	*Classes of Sleeping Accommodations*
9.2.2(6)(d)	*Requirements for Accessible Units, Sleeping Rooms, and Suites*

A4.1.1 Application.

A4.1.1(3) Areas Used Only by Employees as Work Areas. *Where there are a series of individual work stations of the same type (e.g., laboratories, service counters, ticket booths), 5%, but not less than one, of each type of work station should be constructed so that an individual with disabilities can maneuver within the work stations. Rooms housing individual offices in a typical office building must meet the requirements of the guidelines concerning doors, accessible routes, etc. but do not need to allow for maneuvering space around individual desks. Modifications required to permit maneuvering within the work area may be accomplished as a reasonable accommodation to individual employees with disabilities under Title I of the ADA. Consideration should also be given to placing shelves in employee work areas at a convenient height for accessibility or installing commercially available shelving that is adjustable so that reasonable accommodations can be made in the future.*

If work stations are made accessible they should comply with the applicable provisions of 4.2 through 4.35.

A4.1.2 Accessible Sites and Exterior Facilities: New Construction.

A4.1.2(5)(e) Valet Parking. *Valet parking is not always usable by individuals with disabilities. For instance, an individual may use a type of vehicle controls that render the regular controls inoperable or the driver's seat in a van may be removed. In these situations, another person cannot park the vehicle. It is recommended that some self-parking spaces be provided at valet parking facilities for individuals whose vehicles cannot be parked by another person and that such spaces be located on an accessible route to the entrance of the facility.*

A4.1.3 Accessible Buildings: New Construction.

A4.1.3(5) *Only full passenger elevators are covered by the accessibility provisions of 4.10. Materials and equipment hoists, freight elevators not intended for passenger use, dumbwaiters, and construction elevators are not covered by these guidelines. If a building is exempt from the elevator requirement, it is not necessary to provide a platform lift or other means of vertical access in lieu of an elevator.*

Under Exception 4, platform lifts are allowed where existing conditions make it impractical to install a ramp or elevator. Such conditions generally occur where it is essential to provide access to small raised or lowered areas where space may not be available for a ramp. Examples include, but are not limited to, raised pharmacy platforms, commercial offices raised above a sales floor, or radio and news booths.

A4.1.3(9) *Supervised automatic sprinkler systems have built in signals for monitoring features of the system such as the opening and closing of water control valves, the power supplies for needed pumps, water tank levels, and for indicating conditions that will impair the satisfactory operation of the sprinkler system.*

A4.2 Space Allowances and Reach Ranges

Because of these monitoring features, supervised automatic sprinkler systems have a high level of satisfactory performance and response to fire conditions.

A4.1.3(10) *If an odd number of drinking fountains is provided on a floor, the requirement in 4.1.3(10)(b) may be met by rounding down the odd number to an even number and calculating 50% of the even number. When more than one drinking fountain on a floor is required to comply with 4.15, those fountains should be dispersed to allow wheelchair users convenient access. For example, in a large facility such as a convention center that has water fountains at several locations on a floor, the accessible water fountains should be located so that wheelchair users do not have to travel a greater distance than other people to use a drinking fountain.*

A4.1.3(17)(b) *In addition to the requirements of section 4.1.3(17)(b), the installation of additional volume controls is encouraged. Volume controls may be installed on any telephone.*

A4.1.3(19)(a) *Readily removable or folding seating units may be installed in lieu of providing an open space for wheelchair users. Folding seating units are usually two fixed seats that can be easily folded into a fixed center bar to allow for one or two open spaces for wheelchair users when necessary. These units are more easily adapted than removable seats which generally require the seat to be removed in advance by the facility management.*

Either a sign or a marker placed on seating with removable or folding arm rests is required by this section. Consideration should be given for ensuring identification of such seats in a darkened theater. For example, a marker which contrasts (light on dark or dark on light) and which also reflects light could be placed on the side of such seating so as to be visible in a lighted auditorium and also to reflect light from a flashlight.

A4.1.6 Accessible Buildings: Alterations.

A4.1.6(1)(h) *When an entrance is being altered, it is preferable that those entrances being altered be made accessible to the extent feasible.*

A4.2 Space Allowances and Reach Ranges.

A4.2.1 Wheelchair Passage Width.

(1) Space Requirements for Wheelchairs. Many persons who use wheelchairs need a 30 in (760 mm) clear opening width for doorways, gates, and the like, when the latter are entered head-on. If the *person* is unfamiliar with a building, if competing traffic is heavy, if sudden or frequent movements are needed, or if the wheelchair must be turned at an opening, then greater clear widths are needed. For most situations, the addition of an inch of leeway on either side is sufficient. Thus, a minimum clear width of 32 in (815 mm) will provide adequate clearance. However, when an opening or a restriction in a passageway is more than 24 in (610 mm) long, it is essentially a passageway and must be at least 36 in (915 mm) wide.

(2) Space Requirements for Use of Walking Aids. Although people who use walking aids can maneuver through clear width openings of 32 in (815 mm), they need 36 in (915 mm) wide passageways and walks for comfortable gaits. Crutch tips, often extending down at a wide angle, are a hazard in narrow passageways where they might not be seen by other pedestrians. Thus, the 36 in (915 mm) width provides a safety allowance both for the person *with a disability* and for others.

(3) Space Requirements for Passing. Able-bodied *persons* in winter clothing, walking

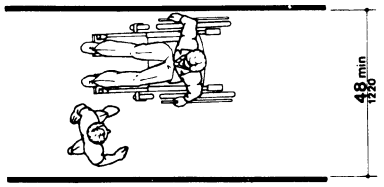

Fig. A1
Minimum Passage Width for One Wheelchair and One Ambulatory Person

A4.2 Space Allowances and Reach Ranges

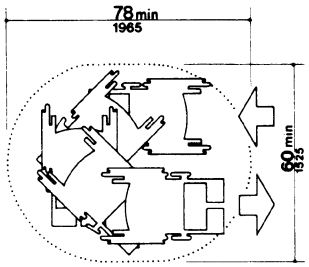

Fig. A2
Space Needed for Smooth U-Turn in a Wheelchair

straight ahead with arms swinging, need 32 in (815 mm) of width, which includes 2 in (50 mm) on either side for sway, and another 1 in (25 mm) tolerance on either side for clearing nearby objects or other pedestrians. Almost all wheelchair users and those who use walking aids can also manage within this 32 in (815 mm) width for short distances. Thus, two streams of traffic can pass in 64 in (1625 mm) in a comfortable flow. Sixty inches (1525 mm) provides a minimum width for a somewhat more restricted flow. If the clear width is less than 60 in (1525 mm), two wheelchair users will not be able to pass but will have to seek a wider place for passing. Forty-eight inches (1220 mm) is the minimum width needed for an ambulatory person to pass a nonambulatory or semi-ambulatory person. Within this 48 in (1220 mm) width, the ambulatory person will have to twist to pass a wheelchair user, a person with a *service animal*, or a

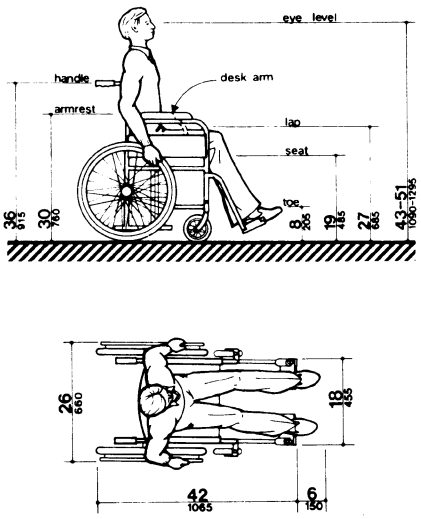

NOTE: Footrests may extend further for tall people

Fig. A3
Dimensions of Adult-Sized Wheelchairs

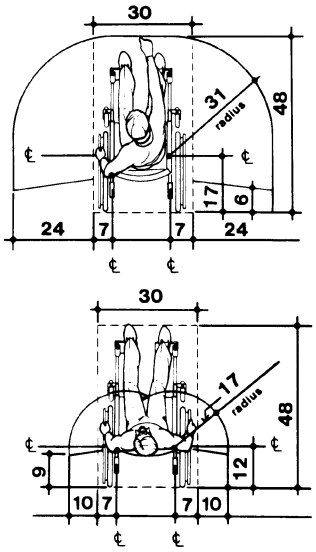

Fig. A3 (a)

A3

A4.3 Accessible Route

semi-ambulatory person. There will be little leeway for swaying or missteps (see Fig. A1).

A4.2.3 Wheelchair Turning Space. *These guidelines specify* a minimum space of 60 in (1525 mm) diameter *or a 60 in by 60 in (1525 mm by 1525 mm) T-shaped space* for a pivoting 180-degree turn of a wheelchair. This space is usually satisfactory for turning around, but many people will not be able to turn without repeated tries and bumping into surrounding objects. The space shown in Fig. A2 will allow most wheelchair users to complete U-turns without difficulty.

A4.2.4 Clear Floor or Ground Space for Wheelchairs. The wheelchair and user shown in Fig. A3 represent typical dimensions for a large adult male. The space requirements in this *guideline* are based upon maneuvering clearances that will accommodate most wheelchairs. Fig. A3 provides a uniform reference for design not covered by this *guideline*.

A4.2.5 & A4.2.6 Reach. *Reach ranges for persons seated in wheelchairs may be further clarified by Fig. A3(a). These drawings approximate in the plan view the information shown in Fig. 4, 5, and 6.*

A4.3 Accessible Route.

A4.3.1 General.

(1) Travel Distances. Many people with mobility impairments can move at only very slow speeds; for many, traveling 200 ft (61 m) could take about 2 minutes. This assumes a rate of about 1.5 ft/s (455 mm/s) on level ground. It also assumes that the traveler would move continuously. However, on trips over 100 ft (30 m), disabled people are apt to rest frequently, which substantially increases their trip times. Resting periods of 2 minutes for every 100 ft (30 m) can be used to estimate travel times for people with severely limited stamina. In inclement weather, slow progress and resting can greatly increase a disabled person's exposure to the elements.

(2) Sites. Level, indirect routes or those with running slopes lower than 1:20 can sometimes provide more convenience than direct routes with maximum allowable slopes or with ramps.

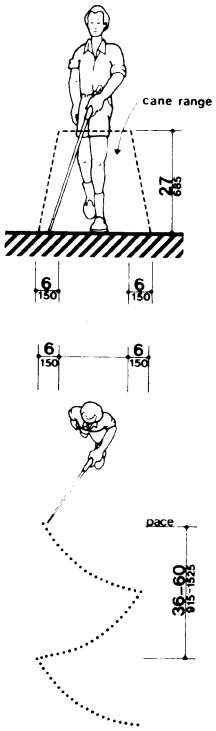

Fig. A4
Cane Technique

A4.3.10 Egress. Because people with disabilities may visit, be employed or be a resident in any building, emergency management plans with specific provisions to ensure their safe evacuation also play an essential role in fire safety and life safety.

A4.3.11.3 Stairway Width. *A 48 inch (1220 mm) wide exit stairway is needed to allow assisted evacuation (e.g., carrying a person in a wheelchair) without encroaching on the exit path for ambulatory persons.*

A4.3.11.4 Two-way Communication. *It is essential that emergency communication not be dependent on voice communications alone because the safety of people with hearing or speech impairments could be jeopardized. The visible signal requirement could be satisfied with something as simple as a button in the area of rescue assistance that lights, indicating that help is on the way, when the message is answered at the point of entry.*

A4.4 Protruding Objects.

A4.4.1 General. *Service animals* are trained to recognize and avoid hazards. However, most people with severe impairments of vision use the long cane as an aid to mobility. The two principal cane techniques are the touch technique, where the cane arcs from side to side and touches points outside both shoulders; and the diagonal technique, where the cane is held in a stationary position diagonally across the body with the cane tip touching or just above the ground at a point outside one shoulder and the handle or grip extending to a point outside the other shoulder. The touch technique is used primarily in uncontrolled areas, while the diagonal technique is used primarily in certain limited, controlled, and familiar environments. Cane users are often trained to use both techniques.

Potential hazardous objects are noticed only if they fall within the detection range of canes (see Fig. A4). Visually impaired people walking toward an object can detect an overhang if its lowest surface is not higher than 27 in (685 mm). When walking alongside *protruding* objects, they cannot detect overhangs. Since proper cane and *service animal* techniques keep people away from the edge of a path or from walls, a slight overhang of no more than 4 in (100 mm) is not hazardous.

A4.5 Ground and Floor Surfaces.

A4.5.1 General. *People who have difficulty walking or* maintaining balance *or who use crutches, canes, or walkers,* and those with restricted gaits are particularly sensitive to slipping and tripping hazards. For such people, a stable and regular surface is necessary for safe walking, particularly on stairs. Wheelchairs can be propelled most easily on surfaces that are hard, stable, and regular. Soft loose surfaces such as shag carpet, loose sand or gravel, wet clay, and irregular surfaces such as cobblestones can significantly impede wheelchair movement.

Slip resistance is based on the frictional force necessary to keep a shoe heel or crutch tip from slipping on a walking surface under conditions likely to be found on the surface. *While the dynamic coefficient of friction during walking varies in a complex and non-uniform way, the static coefficient of friction, which can be measured in several ways, provides a close approximation of the slip resistance of a surface. Contrary to popular belief, some slippage is necessary to walking, especially for persons with restricted gaits; a truly "non-slip" surface could not be negotiated.*

The Occupational Safety and Health Administration recommends that walking surfaces have a static coefficient of friction of 0.5. A research project sponsored by the Architectural and Transportation Barriers Compliance Board (Access Board) conducted tests with persons with disabilities and concluded that a higher coefficient of friction was needed by such persons. A static coefficient of friction of 0.6 is recommended for accessible routes and 0.8 for ramps.

It is recognized that the coefficient of friction varies considerably due to the presence of contaminants, water, floor finishes, and other factors not under the control of the designer or builder and not subject to design and construction guidelines and that compliance would be difficult to measure on the building site. Nevertheless, many common building materials suitable for flooring are now labeled with information on the static coefficient of friction. While it may not be possible to compare one product directly with another, or to guarantee a constant measure, builders and designers are encouraged to specify materials with appropriate values. As more products include information on slip resistance, improved uniformity in measurement and specification is likely. The Access Board's advisory guidelines on Slip Resistant Surfaces provides additional information on this subject.

Cross slopes on walks and ground or floor surfaces can cause considerable difficulty in propelling a wheelchair in a straight line.

A4.6 Parking and Passenger Loading Zones

A4.5.3 Carpet. Much more needs to be done in developing both quantitative and qualitative criteria for carpeting *(i.e., problems associated with texture and weave need to be studied).* However, certain functional characteristics are well established. When both carpet and padding are used, it is desirable to have minimum movement (preferably none) between the floor and the pad and the pad and the carpet which would allow the carpet to hump or warp. In heavily trafficked areas, a thick, soft (plush) pad or cushion, particularly in combination with long carpet pile, makes it difficult for individuals in wheelchairs and those with other ambulatory disabilities to get about. Firm carpeting can be achieved through proper selection and combination of pad and carpet, sometimes with the elimination of the pad or cushion, and with proper installation. *Carpeting designed with a weave that causes a zig-zag effect when wheeled across is strongly discouraged.*

A4.6 Parking and Passenger Loading Zones.

A4.6.3 Parking Spaces. *The increasing use of vans with side-mounted lifts or ramps by persons with disabilities has necessitated some revisions in specifications for parking spaces and adjacent access aisles. The typical accessible parking space is 96 in (2440 mm) wide with an adjacent 60 in (1525 mm) access aisle. However, this aisle does not permit lifts or ramps to be deployed and still leave room for a person using a wheelchair or other mobility aid to exit the lift platform or ramp. In tests conducted with actual lift/van/wheelchair combinations, (under a Board-sponsored Accessible Parking and Loading Zones Project) researchers found that a space and aisle totaling almost 204 in (5180 mm) wide was needed to deploy a lift and exit conveniently. The "van accessible" parking space required by these guidelines provides a 96 in (2440 mm) wide space with a 96 in (2440 mm) adjacent access aisle which is just wide enough to maneuver and exit from a side mounted lift. If a 96 in (2440 mm) access aisle is placed between two spaces, two "van accessible" spaces are created. Alternatively, if the wide access aisle is provided at the end of a row (an area often unused), it may be possible to provide the wide access aisle without additional space (see Fig. A5(a)).*

A sign is needed to alert van users to the presence of the wider aisle, but the space is not intended to be restricted only to vans.

"Universal" Parking Space Design. An alternative to the provision of a percentage of spaces with a wide aisle, and the associated need to include additional signage, is the use of what has been called the "universal" parking space design. Under this design, all accessible spaces are 132 in (3350 mm) wide with a 60 in (1525 mm) access aisle (see Fig. A5(b)). One

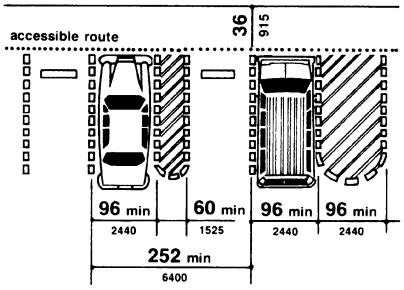

(a)
Van Accessible Space at End Row

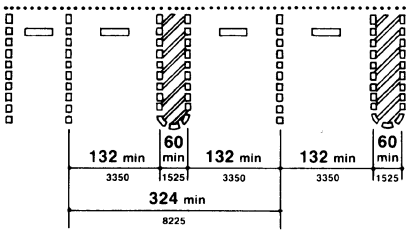

(b)
Universal Parking Space Design

Fig. A5
Parking Space Alternatives

A6

advantage to this design is that no additional signage is needed because all spaces can accommodate a van with a side-mounted lift or ramp. Also, there is no competition between cars and vans for spaces since all spaces can accommodate either. Furthermore, the wider space permits vehicles to park to one side or the other within the 132 in (3350 mm) space to allow persons to exit and enter the vehicle on either the driver or passenger side, although, in some cases, this would require exiting or entering without a marked access aisle.

An essential consideration for any design is having the access aisle level with the parking space. Since a person with a disability, using a lift or ramp, must maneuver within the access aisle, the aisle cannot include a ramp or sloped area. The access aisle must be connected to an accessible route to the appropriate accessible entrance of a building or facility. The parking access aisle must either blend with the accessible route or have a curb ramp complying with 4.7. Such a curb ramp opening must be located within the access aisle boundaries, not within the parking space boundaries. Unfortunately, many facilities are designed with a ramp that is blocked when any vehicle parks in the accessible space. Also, the required dimensions of the access aisle cannot be restricted by planters, curbs or wheel stops.

A4.6.4 Signage. Signs designating parking places for disabled people can be seen from a driver's seat if the signs are mounted high enough above the ground and located at the front of a parking space.

A4.6.5 Vertical Clearance. High-top vans, which disabled people or transportation services often use, require higher clearances in parking garages than automobiles.

A4.8 Ramps.

A4.8.1 General. Ramps are essential for wheelchair users if elevators or lifts are not available to connect different levels. However, some people who use walking aids have difficulty with ramps and prefer stairs.

A4.8.2 Slope and Rise. *Ramp slopes between 1:16 and 1:20 are preferred.* The ability to manage an incline is related to both its slope and its length. Wheelchair users with disabilities affecting *their* arms or with low stamina have serious difficulty using inclines. Most ambulatory people and most people who use wheelchairs can manage a slope of 1:16. Many people cannot manage a slope of 1:12 for 30 ft (9 m).

A4.8.4 Landings. *Level landings are essential toward maintaining an aggregate slope that complies with these guidelines. A ramp landing that is not level causes individuals using wheelchairs to tip backward or bottom out when the ramp is approached.*

A4.8.5 Handrails. The requirements for stair and ramp handrails in this *guideline* are for adults. When children are principal users in a building or facility, a second set of handrails at an appropriate height can assist them and aid in preventing accidents.

A4.9 Stairs.

A4.9.1 Minimum Number. *Only interior and exterior stairs connecting levels that are not connected by an elevator, ramp, or other accessible means of vertical access have to comply with 4.9.*

A4.10 Elevators.

A4.10.6 Door Protective and Reopening Device. The required door reopening device would hold the door open for 20 seconds if the doorway remains obstructed. After 20 seconds, the door may begin to close. However, if designed in accordance with *ASME A17.1-1990*, the door closing movement could still be stopped if a person or object exerts sufficient force at any point on the door edge.

A4.10.7 Door and Signal Timing for Hall Calls. This paragraph allows variation in the location of call buttons, advance time for warning signals, and the door-holding period used to meet the time requirement.

A4.10.12 Car Controls. Industry-wide standardization of elevator control panel design would make all elevators significantly more convenient for use by people with severe visual impairments. In many cases, it will be possible to locate the highest control on elevator panels within 48 in (1220 mm) from the floor.

A4.11 Platform Lifts *(Wheelchair Lifts)*

A4.10.13 Car Position Indicators. A special button may be provided that would activate the audible signal within the given elevator only for the desired trip, rather than maintaining the audible signal in constant operation.

A4.10.14 Emergency Communications. A device that requires no handset is easier to use by people who have difficulty reaching. *Also, small handles on handset compartment doors are not usable by people who have difficulty grasping.*

Ideally, emergency two-way communication systems should provide both voice and visual display intercommunication so that persons with hearing impairments and persons with vision impairments can receive information regarding the status of a rescue. A voice intercommunication system cannot be the only means of communication because it is not accessible to people with speech and hearing impairments. While a voice intercommunication system is not required, at a minimum, the system should provide both an audio and visual indication that a rescue is on the way.

A4.11 Platform Lifts *(Wheelchair Lifts).*

A4.11.2 Other Requirements. *Inclined stairway chairlifts, and inclined and vertical platform lifts (wheelchair lifts) are available* for short-distance, vertical transportation of people with disabilities. Care should be taken in selecting lifts *as some lifts are not equally suitable for use by both wheelchair users and semi-ambulatory individuals.*

A4.12 Windows.

A4.12.1 General. *Windows intended to be operated by occupants in accessible spaces should comply with 4.12.*

A4.12.2 Window Hardware. *Windows requiring pushing, pulling, or lifting to open (for example, double-hung, sliding, or casement and awning units without cranks) should require no more than 5 lbf (22.2 N) to open or close. Locks, cranks, and other window hardware should comply with 4.27.*

A4.13 Doors.

A4.13.8 Thresholds at Doorways. Thresholds and surface height changes in doorways are particularly inconvenient for wheelchair users who also have low stamina or restrictions in arm movement because complex maneuvering is required to get over the level change while operating the door.

A4.13.9 Door Hardware. Some disabled persons must push against a door with their chair or walker to open it. Applied kickplates on doors with closers can reduce required maintenance by withstanding abuse from wheelchairs and canes. To be effective, they should cover the door width, less approximately 2 in (51 mm), up to a height of 16 in (405 mm) from its bottom edge and be centered across the *width of the door.*

A4.13.10 Door Closers. Closers with delayed action features give a person more time to maneuver through doorways. They are particularly useful on frequently used interior doors such as entrances to toilet rooms.

A4.13.11 Door Opening Force. Although most people with disabilities can exert at least 5 lbf (22.2N), both pushing and pulling from a stationary position, a few people with severe disabilities cannot exert 3 lbf (13.13N). Although some people cannot manage the allowable forces in this guideline and many others have difficulty, door closers must have certain minimum closing forces to close doors satisfactorily. Forces for pushing or pulling doors open are measured with a push-pull scale under the following conditions:

(1) Hinged doors: Force applied perpendicular to the door at the door opener or 30 in (760 mm) from the hinged side, whichever is farther from the hinge.

(2) Sliding or folding doors: Force applied parallel to the door at the door pull or latch.

(3) Application of force: Apply force gradually so that the applied force does not exceed the resistance of the door. In high-rise buildings, air-pressure differentials may require a modification of this specification in order to meet the functional intent.

A4.13.12 Automatic Doors and Power-Assisted Doors. Sliding automatic doors do not need guard rails and are more convenient for wheelchair users and visually impaired people to use. If slowly opening automatic doors can be reactivated before their closing cycle is completed, they will be more convenient in busy doorways.

A4.15 Drinking Fountains and Water Coolers.

A4.15.2 Spout Height. *Two drinking fountains, mounted side by side or on a single post, are usable by people with disabilities and people who find it difficult to bend over.*

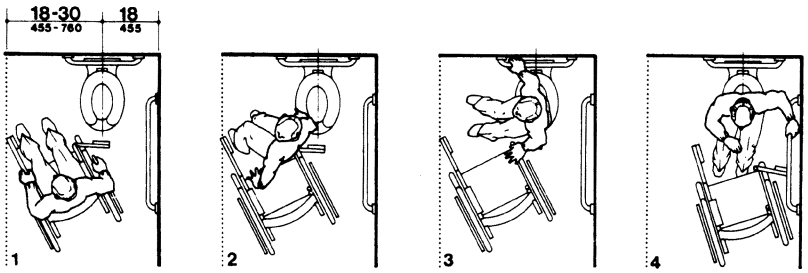

1 Takes transfer position, swings footrest out of the way, sets brakes.

2 Removes armrest, transfers.

3 Moves wheelchair out of the way, changes position (some people fold chair or pivot it 90° to the toilet).

4 Positions on toilet, releases brake.

(a)
Diagonal Approach

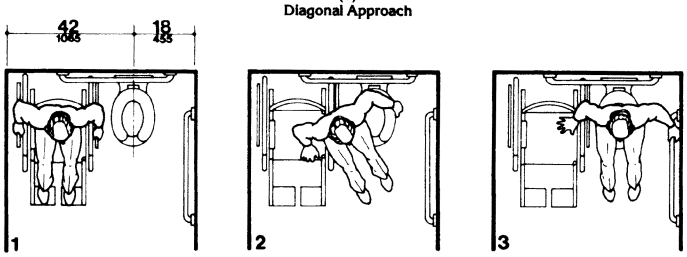

1 Takes transfer position, removes armrest, sets brakes.

2 Transfers.

3 Positions on toilet.

(b)
Side Approach

Fig. A6
Wheelchair Transfers

A4.16 Water Closets

A4.16 Water Closets.

A4.16.3 Height. Height preferences for toilet seats vary considerably among disabled people. Higher seat heights may be an advantage to some ambulatory disabled people, but are often a disadvantage for wheelchair users and others. Toilet seats 18 in (455 mm) high seem to be a reasonable compromise. Thick seats and filler rings are available to adapt standard fixtures to these requirements.

A4.16.4 Grab Bars. Fig. A6(a) and (b) show the diagonal and side approaches most commonly used to transfer from a wheelchair to a water closet. Some wheelchair users can transfer from the front of the toilet while others use a 90-degree approach. Most people who use the two additional approaches can also use either the diagonal approach or the side approach.

A4.16.5 Flush Controls. Flush valves and related plumbing can be located behind walls or to the side of the toilet, or a toilet seat lid can be provided if plumbing fittings are directly behind the toilet seat. Such designs reduce the chance of injury and imbalance caused by leaning back against the fittings. Flush controls for tank-type toilets have a standardized mounting location on the left side of the tank (facing the tank). Tanks can be obtained by special order with controls mounted on the right side. If administrative authorities require flush controls for flush valves to be located in a position that conflicts with the location of the rear grab bar, then that bar may be split or shifted toward the wide side of the toilet area.

A4.17 Toilet Stalls.

A4.17.3 Size and Arrangement. *This section requires use of the 60 in (1525 mm) standard stall (Figure 30(a)) and permits the 36 in (915 mm) or 48 in (1220 mm) wide alternate stall (Figure 30(b)) only in alterations where provision of the standard stall is technically infeasible or where local plumbing codes prohibit reduction in the number of fixtures. A standard stall provides a clear space on one side of the water closet to enable persons who use wheelchairs to perform a side or diagonal transfer from the wheelchair to the water closet. However, some persons with disabilities who use mobility aids such as walkers, canes or crutches are better able to use the two parallel grab bars in the 36 in (915 mm) wide alternate stall to achieve a standing position.*

In large toilet rooms, where six or more toilet stalls are provided, it is therefore required that a 36 in (915 mm) wide stall with parallel grab bars be provided in addition to the standard stall required in new construction. The 36 in (915 mm) width is necessary to achieve proper use of the grab bars; wider stalls would position the grab bars too far apart to be easily used and narrower stalls would position the grab bars too close to the water closet. Since the stall is primarily intended for use by persons using canes, crutches and walkers, rather than wheelchairs, the length of the stall could be conventional. The door, however, must swing outward to ensure a usable space for people who use crutches or walkers.

A4.17.5 Doors. To make it easier for wheelchair users to close toilet stall doors, doors can be provided with closers, spring hinges, or a pull bar mounted on the inside surface of the door near the hinge side.

A4.19 Lavatories and Mirrors.

A4.19.6 Mirrors. If mirrors are to be used by both ambulatory people and wheelchair users, then they must be at least 74 in (1880 mm) high at their topmost edge. A single full length mirror can accommodate all people, including children.

A4.21 Shower Stalls.

A4.21.1 General. Shower stalls that are 36 in by 36 in (915 mm by 915 mm) wide provide additional safety to people who have difficulty maintaining balance because all grab bars and walls are within easy reach. Seated people use the walls of 36 in by 36 in (915 mm by 915 mm) showers for back support. Shower stalls that are 60 in (1525 mm) wide and have no curb may increase usability of a bathroom by wheelchair users because the shower area provides additional maneuvering space.

A4.22 Toilet Rooms.

A4.22.3 Clear Floor Space. *In many small facilities, single-user restrooms may be the only*

A4.22 Toilet Rooms

facilities provided for all building users. In addition, the guidelines allow the use of "unisex" or "family" accessible toilet rooms in alterations when technical infeasibility can be demonstrated. Experience has shown that the provision of accessible "unisex" or single-user restrooms is a reasonable way to provide access for wheelchair users and any attendants, especially when attendants are of the opposite sex. Since these facilities have proven so useful, it is often considered advantageous to install a "unisex" toilet room in new facilities in addition to making the multi-stall restrooms accessible, especially in shopping malls, large auditoriums, and convention centers.

Figure 28 (section 4.16) provides minimum clear floor space dimensions for toilets in accessible "unisex" toilet rooms. The dotted lines designate the minimum clear floor space, depending on the direction of approach, required for wheelchair users to transfer onto the water closet. The dimensions of 48 in (1220 mm) and 60 in (1525 mm), respectively, correspond to the space required for the two common transfer approaches utilized by wheelchair users (see Fig. A6). It is important to keep in mind that the placement of the lavatory to the immediate side of the water closet will preclude the side approach transfer illustrated in Figure A6(b).

To accommodate the side transfer, the space adjacent to the water closet must remain clear of obstruction for 42 in (1065 mm) from the centerline of the toilet (Figure 28) and the lavatory must not be located within this clear space. A turning circle or T-turn, the clear floor space at the lavatory, and maneuvering space at the door must be considered when determining the possible wall locations. A privacy latch or other accessible means of ensuring privacy during use should be provided at the door.

RECOMMENDATIONS:

1. In new construction, accessible single-user restrooms may be desirable in some situations because they can accommodate a wide variety of building users. However, they cannot be used in lieu of making the multi-stall toilet rooms accessible as required.

2. Where strict compliance to the guidelines for accessible toilet facilities is technically infeasible in the alteration of existing facilities, accessible "unisex" toilets are a reasonable alternative.

3. In designing accessible single-user restrooms, the provisions of adequate space to allow a side transfer will provide accommodation to the largest number of wheelchair users.

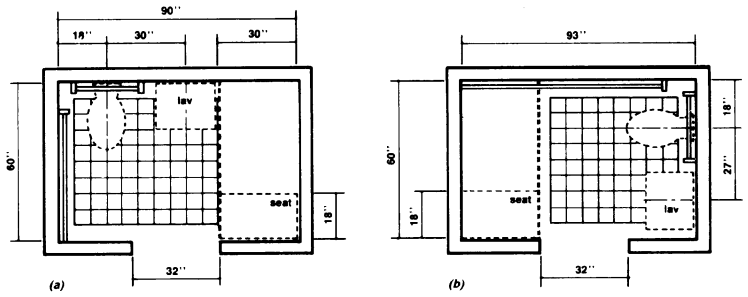

Fig. A7

A4.23 Bathrooms, Bathing Facilities, and Shower Rooms

A4.23 Bathrooms, Bathing Facilities, and Shower Rooms.

A4.23.3 Clear Floor Space. *Figure A7 shows two possible configurations of a toilet room with a roll-in shower. The specific shower shown is designed to fit exactly within the dimensions of a standard bathtub. Since the shower does not have a lip, the floor space can be used for required maneuvering space. This would permit a toilet room to be smaller than would be permitted with a bathtub and still provide enough floor space to be considered accessible. This design can provide accessibility in facilities where space is at a premium (i.e., hotels and medical care facilities). The alternate roll-in shower (Fig. 57b) also provides sufficient room for the "T-turn" and does not require plumbing to be on more than one wall.*

A4.23.9 Medicine Cabinets. Other alternatives for storing medical and personal care items are very useful to disabled people. Shelves, drawers, and floor-mounted cabinets can be provided within the reach ranges of disabled people.

A4.26 Handrails, Grab Bars, and Tub and Shower Seats.

A4.26.1 General. Many disabled people rely heavily upon grab bars and handrails to maintain balance and prevent serious falls. Many people brace their forearms between supports and walls to give them more leverage and stability in maintaining balance or for lifting. The grab bar clearance of 1-1/2 in (38 mm) required in this guideline is a safety clearance to prevent injuries resulting from arms slipping through the openings. It also provides adequate gripping room.

A4.26.2 Size and Spacing of Grab Bars and Handrails. This specification allows for alternate shapes of handrails as long as they allow an opposing grip similar to that provided by a circular section of 1-1/4 in to 1-1/2 in (32 mm to 38 mm).

A4.27 Controls and Operating Mechanisms.

A4.27.3 Height. *Fig. A8 further illustrates*

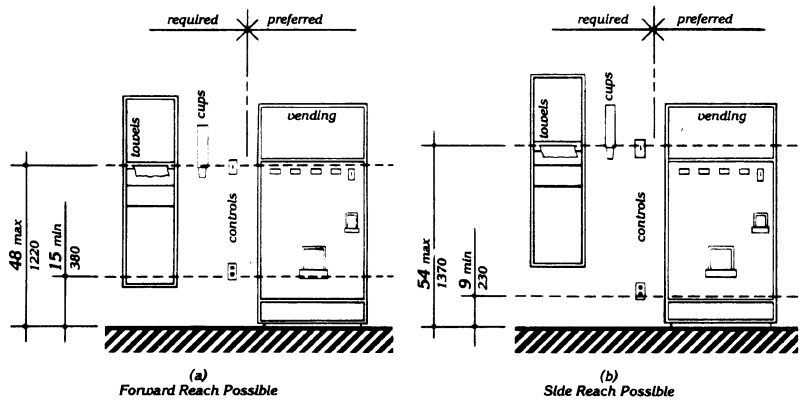

Fig. A8
Control Reach Limitations

mandatory and advisory control mounting height provisions for typical equipment.

Electrical receptacles installed to serve individual appliances and not intended for regular or frequent use by building occupants are not required to be mounted within the specified reach ranges. Examples would be receptacles installed specifically for wall-mounted clocks, refrigerators, and microwave ovens.

A4.28 Alarms.

A4.28.2 Audible Alarms. Audible emergency signals must have an intensity and frequency that can attract the attention of individuals who have partial hearing loss. People over 60 years of age generally have difficulty perceiving frequencies higher than 10,000 Hz. *An alarm signal which has a periodic element to its signal, such as single stroke bells (clang-pause-clang-pause), hi-low (up-down-up-down) and fast whoop (on-off-on-off) are best. Avoid continuous or reverberating tones. Select a signal which has a sound characterized by three or four clear tones without a great deal of "noise" in between.*

A4.28.3 Visual Alarms. The specifications in this section do not preclude the use of zoned or coded alarm systems.

A4.28.4 Auxiliary Alarms. Locating visual emergency alarms in rooms where persons who are deaf may work or reside alone can ensure that they will always be warned when an emergency alarm is activated. To be effective, such devices must be located and oriented so that they will spread signals and reflections throughout a space or raise the overall light level sharply. *However, visual alarms alone are not necessarily the best means to alert sleepers. A study conducted by Underwriters Laboratory (UL) concluded that a flashing light more than seven times brighter was required (110 candela v. 15 candela, at the same distance) to awaken sleepers as was needed to alert awake subjects in a normal daytime illuminated room.*

For hotel and other rooms where people are likely to be asleep, a signal-activated vibrator placed between mattress and box spring or under a pillow was found by UL to be much more effective in alerting sleepers. Many readily available devices are sound-activated so that they could respond to an alarm clock, clock radio, wake-up telephone call or room smoke detector. Activation by a building alarm system can either be accomplished by a separate circuit activating an auditory alarm which would, in turn, trigger the vibrator or by a signal transmitted through the ordinary 110-volt outlet. Transmission of signals through the power line is relatively simple and is the basis of common, inexpensive remote light control systems sold in many department and electronic stores for home use. So-called "wireless" intercoms operate on the same principal.

A4.29 *Detectable* Warnings.

A4.29.2 *Detectable* Warnings on Walking Surfaces. *The material used to provide contrast should contrast by at least 70%. Contrast in percent is determined by:*

$$Contrast = [(B_1 - B_2)/B_1] \times 100$$

where B_1 = light reflectance value (LRV) of the lighter area
and B_2 = light reflectance value (LRV) of the darker area.

Note that in any application both white and black are never absolute; thus, B_1 never equals 100 and B_2 is always greater than 0.

A4.30 Signage.

A4.30.1 General. In building complexes where finding locations independently on a routine basis may be a necessity (for example, college campuses), tactile maps or prerecorded instructions can be very helpful to visually impaired people. Several maps and auditory instructions have been developed and tested for specific applications. The type of map or instructions used must be based on the information to be communicated, which depends highly on the type of buildings or users.

Landmarks that can easily be distinguished by visually impaired individuals are useful as orientation cues. Such cues include changes in illumination level, bright colors, unique patterns, wall murals, location of special equipment or other architectural features.

Many people with disabilities have limitations in movement of their heads and reduced peripheral vision. Thus, signage positioned

A4.30 Signage

perpendicular to the path of travel is easiest for them to notice. People can generally distinguish signage within an angle of 30 degrees to either side of the centerlines of their faces without moving their heads.

A4.30.2 Character Proportion. The legibility of printed characters is a function of the viewing distance, character height, the ratio of the stroke width to the height of the character, the contrast of color between character and background, and print font. The size of characters must be based upon the intended viewing distance. A severely nearsighted person may have to be much closer to recognize a character of a given size than a person with normal visual acuity.

A4.30.4 Raised *and Brailled* Characters *and Pictorial Symbol Signs (Pictograms).* *The standard dimensions for literary Braille are as follows:*

Dot diameter	*.059 in.*
Inter-dot spacing	*.090 in.*
Horizontal separation between cells	*.241 in.*
Vertical separation between cells	*.395 in.*

Raised borders around *signs containing* raised characters may make them confusing to read unless the border is set far away from the characters. *Accessible signage with descriptive materials about public buildings, monuments, and objects of cultural interest may not provide sufficiently detailed and meaningful information. Interpretive guides, audio tape devices, or other methods may be more effective in presenting such information.*

A4.30.5 Finish and Contrast. *An eggshell finish (11 to 19 degree gloss on 60 degree glossimeter) is recommended. Research indicates that signs are more legible for persons with low vision when characters contrast with their background by at least 70 percent. Contrast in percent shall be determined by:*

$$Contrast = [(B_1 - B_2)/B_1] \times 100$$

where B_1 = light reflectance value (LRV) of the lighter area
and B_2 = light reflectance value (LRV) of the darker area.

Note that in any application both white and black are never absolute; thus, B_1 never equals 100 and B_2 is always greater than 0.

The greatest readability is usually achieved through the use of light-colored characters or symbols on a dark background.

A4.30.7 Symbols of Accessibility for Different Types of Listening Systems. *Paragraph 4 of this section requires signage indicating the availability of an assistive listening system. An appropriate message should be displayed with the international symbol of access for hearing loss since this symbol conveys general accessibility for people with hearing loss. Some suggestions are:*

INFRARED
ASSISTIVE LISTENING SYSTEM
AVAILABLE
——PLEASE ASK——

AUDIO LOOP IN USE
TURN T-SWITCH FOR
BETTER HEARING
——OR ASK FOR HELP——

FM
ASSISTIVE LISTENING
SYSTEM AVAILABLE
——PLEASE ASK——

The symbol may be used to notify persons of the availability of other auxiliary aids and services such as: real time captioning, captioned note taking, sign language interpreters, and oral interpreters.

A4.30.8 Illumination Levels. *Illumination levels on the sign surface shall be in the 100 to 300 lux range (10 to 30 footcandles) and shall be uniform over the sign surface. Signs shall be located such that the illumination level on the surface of the sign is not significantly exceeded by the ambient light or visible bright lighting source behind or in front of the sign.*

A4.31 Telephones.

A4.31.3 Mounting Height. In localities where the dial-tone first system is in operation, calls can be placed at a coin telephone through the operator without inserting coins. The operator button is located at a height of 46 in (1170 mm) if the coin slot of the telephone is at 54 in (1370 mm). A generally available public telephone with a coin slot mounted lower on the equipment would allow universal installation of telephones at a height of 48 in (1220 mm) or less to all operable parts.

A4.31.9 Text Telephones. *A public text telephone may be an integrated text telephone pay phone unit or a conventional portable text telephone that is permanently affixed within, or adjacent to, the telephone enclosure. In order to be usable with a pay phone, a text telephone which is not a single integrated text telephone pay phone unit will require a shelf large enough (10 in (255mm) wide by 10 in (255 mm) deep with a 6 in (150 mm) vertical clearance minimum) to accommodate the device, an electrical outlet, and a power cord. Movable or portable text telephones may be used to provide equivalent facilitation. A text telephone should be readily available so that a person using it may access the text telephone easily and conveniently. As currently designed pocket-type text telephones for personal use do not accommodate a wide range of users. Such devices would not be considered substantially equivalent to conventional text telephones. However, in the future as technology develops this could change.*

A4.32 *Fixed or Built-in* Seating and Tables.

A4.32.4 Height of *Tables or Counters.* Different types of work require different *table or counter* heights for comfort and optimal performance. Light detailed work such as writing requires a *table or counter* close to elbow height for a standing person. Heavy manual work such as rolling dough requires *a counter or table* height about 10 in (255 mm) below elbow height for a standing person. This principle of *high/low table or counter heights* also applies for seated persons; however, the limiting condition for seated manual work is clearance under the *table or counter.*

Table A1 shows convenient *counter heights* for seated persons. The great variety of heights for comfort and optimal performance indicates a need for alternatives or a compromise in height if people who stand and people who sit will be using the same counter area.

Table A1
Convenient Heights of Tables and Counters for Seated People[1]

Conditions of Use	Short Women in mm		Tall Men in mm	
Seated in a wheelchair:				
Manual work–				
Desk or removeable armrests	26	660	30	760
Fixed, full-size armrests[2]	32[3]	815	32[3]	815
Light detailed work:				
Desk or removable armrests	29	735	34	865
Fixed, full-size armrests[2]	32[3]	815	34	865
Seated in a 16-in. (405-mm) High chair:				
Manual work	26	660	27	685
Light detailed work	28	710	31	785

[1] All dimensions are based on a work-surface thickness of 1 1/2 in (38 mm) and a clearance of 1 1/2 in (38 mm) between legs and the underside of a work surface.

[2] This type of wheelchair arm does not interfere with the positioning of a wheelchair under a work surface.

[3] This dimension is limited by the height of the armrests: a lower height would be preferable. Some people in this group prefer lower work surfaces, which require positioning the wheelchair back from the edge of the counter.

A4.33 Assembly Areas.

A4.33.2 Size of Wheelchair Locations. Spaces large enough for two wheelchairs allow people who are coming to a performance together to sit together.

A4.33.3 Placement of Wheelchair Locations. The location of wheelchair areas can be planned so that a variety of positions

Table A2. Summary of Assistive Listening Devices

within the seating area are provided. This will allow choice in viewing and price categories.

Building/life safety codes set minimum distances between rows of fixed seats with consideration of the number of seats in a row, the exit aisle width and arrangement, and the location of exit doors. "Continental" seating, with a greater number of seats per row and a commensurate increase in row spacing and exit doors, facilitates emergency egress for all people and increases ease of access to mid-row seats especially for people who walk with difficulty. Consideration of this positive attribute of "continental" seating should be included along with all other factors in the design of fixed seating areas.

Table A2. Summary of Assistive Listening Devices

System	Advantages	Disadvantages	Typical Applications
Induction Loop Transmitter: Transducer wired to induction loop around listening area. Receiver: Self-contained induction receiver or personal hearing aid with telecoil.	Cost-Effective Low Maintenance Easy to use Unobtrusive May be possible to integrate into existing public address system. Some hearing aids can function as receivers.	Signal spills over to adjacent rooms. Susceptible to electrical interference. Limited portability Inconsistent signal strength. Head position affects signal strength. Lack of standards for induction coil performance.	Meeting areas Theaters Churches and Temples Conference rooms Classrooms TV viewing
FM Transmitter: Flashlight-sized worn by speaker. Receiver: With personal hearing aid via DAI or induction neck-loop and telecoil; or self-contained with earphone(s).	Highly portable Different channels allow use by different groups within the same room. High user mobility Variable for large range of hearing losses.	High cost of receivers Equipment fragile Equipment obtrusive High maintenance Expensive to maintain Custom fitting to individual user may be required.	Classrooms Tour groups Meeting areas Outdoor events One-on-one
Infrared Transmitter: Emitter in line-of-sight with receiver. Receiver: Self-contained. Or with personal hearing aid via DAI or induction neckloop and telecoil.	Easy to use Insures privacy or confidentiality Moderate cost Can often be integrated into existing public address system.	Line-of-sight required between emitter and receiver. Ineffective outdoors Limited portability Requires installation	Theaters Churches and Temples Auditoriums Meetings requiring confidentiality TV viewing

Source: Rehab Brief, National Institute on Disability and Rehabilitation Research, Washington, DC, Vol. XII, No. 10, (1990).

A16

A4.33.6 Placement of Listening Systems. A distance of 50 ft (15 m) allows a person to distinguish performers' facial expressions.

A4.33.7 Types of Listening Systems. *An assistive listening system appropriate for an assembly area for a group of persons or where the specific individuals are not known in advance, such as a playhouse, lecture hall or movie theater, may be different from the system appropriate for a particular individual provided as an auxiliary aid or as part of a reasonable accommodation. The appropriate device for an individual is the type that individual can use, whereas the appropriate system for an assembly area will necessarily be geared toward the "average" or aggregate needs of various individuals.* A listening system that can be used from any seat in a seating area is the most flexible way to meet this specification. Earphone jacks with variable volume controls can benefit only people who have slight hearing loss and do not help people who use hearing aids. At the present time, *magnetic induction* loops are the most feasible type of listening system for people who use hearing aids *equipped with "T-coils,"* but people without hearing aids or those with hearing aids not equipped with inductive pick-ups cannot use them *without special receivers.* Radio frequency systems can be extremely effective and inexpensive. People without hearing aids can use them, but people with hearing aids need a special receiver to use them as they are presently designed. If hearing aids had a jack to allow a by-pass of microphones, then radio frequency systems would be suitable for people with and without hearing aids. Some listening systems may be subject to interference from other equipment and feedback from hearing aids of people who are using the systems. Such interference can be controlled by careful engineering design that anticipates feedback sources in the surrounding area.

Table A2, reprinted from a National Institute of Disability and Rehabilitation Research "Rehab Brief," shows some of the advantages and disadvantages of different types of assistive listening systems. In addition, the Architectural and Transportation Barriers Compliance Board (Access Board) has published a pamphlet on Assistive Listening Systems which lists demonstration centers across the country where technical assistance can be obtained in selecting and installing appropriate systems. The state of New York has also adopted a detailed technical specification which may be useful.

A5.0 Restaurants and Cafeterias.

A5.1 General. *Dining counters (where there is no service) are typically found in small carry-out restaurants, bakeries, or coffee shops and may only be a narrow eating surface attached to a wall. This section requires that where such a dining counter is provided, a portion of the counter shall be at the required accessible height.*

A7.0 Business and Mercantile.

A7.2(3) Assistive Listening Devices. *At all sales and service counters, teller windows, box offices, and information kiosks where a physical barrier separates service personnel and customers, it is recommended that at least one permanently installed assistive listening device complying with 4.33 be provided at each location or series. Where assistive listening devices are installed, signage should be provided identifying those stations which are so equipped.*

A7.3 Check-out Aisles. *Section 7.2 refers to counters without aisles; section 7.3 concerns check-out aisles. A counter without an aisle (7.2) can be approached from more than one direction such as in a convenience store. In order to use a check-out aisle (7.3), customers must enter a defined area (an aisle) at a particular point, pay for goods, and exit at a particular point.*

A10.3 Fixed Facilities and Stations.

A10.3.1(7) Route Signs. *One means of making control buttons on fare vending machines usable by persons with vision impairments is to raise them above the surrounding surface. Those activated by a mechanical motion are likely to be more detectable. If farecard vending, collection, and adjustment devices are designed to accommodate farecards having one tactually distinctive corner, then a person who has a vision impairment will insert the card with greater ease. Token collection devices that are designed to accommodate tokens which are perforated can allow a person to distinguish more readily between tokens and common coins. Thoughtful placement of accessible gates and fare vending machines in relation to inaccessible devices will make their use and detection easier for all persons with disabilities.*

[56 FR 35592, July 26, 1991, as amended by Order No. 1679–93, 58 FR 17522, Apr. 5, 1993; Order No. 1836–94, 59 FR 2675, Jan. 18, 1994. Redesignated by AG Order No. 3181–2010, 75 FR 56258, Sept. 15, 2010]