AUTHENTICATED
U.S. GOVERNMENT
INFORMATION
GPO



## APPENDIX C TO SUBPART R OF PART 1926—ILLUSTRATIONS OF BRIDGING TERMINUS POINTS: NON-MANDATORY

**Appendix C to Subpart R -- Illustrations of Bridging Terminus Points: Non-mandatory**

**Guidelines for Complying with §§1926.757(a)(10) and 1926.757(c)(5).**

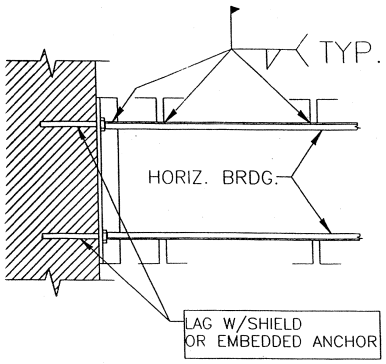


HORIZONTAL BRIDGING TERMINUS AT WALL

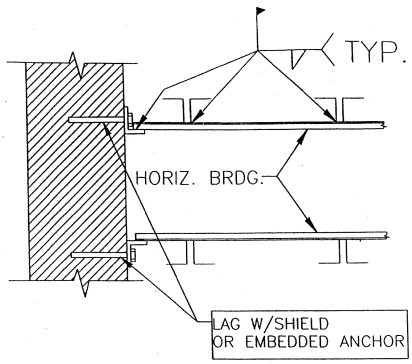


HORIZONTAL BRIDGING TERMINUS AT WALL

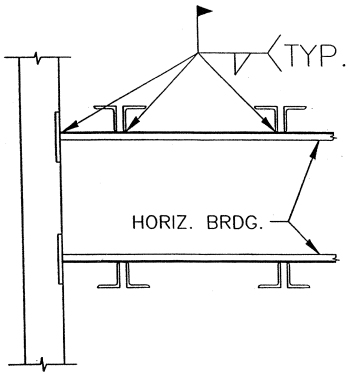


HORIZONTAL BRIDGING TERMINUS AT PANEL WALL

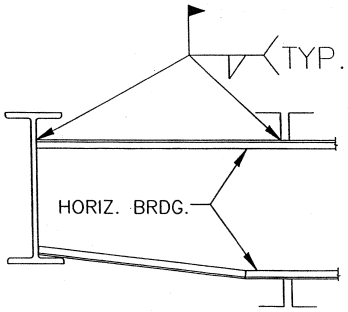


HORIZONTAL BRIDGING TERMINUS AT STRUCTURAL SHAPE

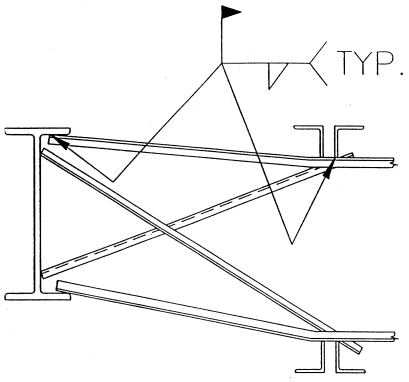


HORIZONTAL BRIDGING TERMINUS AT STRUCTURAL SHAPE WITH OPTIONAL "X-BRIDGING"

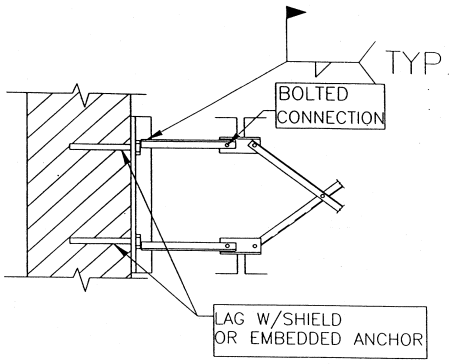


BOLTED DIAGONAL BRIDGING TERMINUS AT WALL

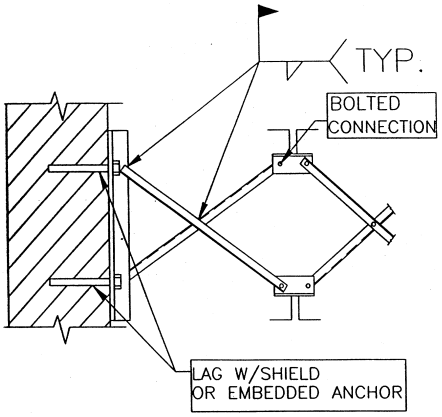


BOLTED DIAGONAL BRIDGING TERMINUS AT WALL

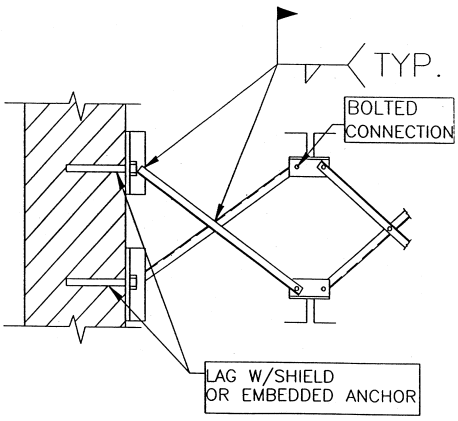


BOLTED DIAGONAL BRIDGING TERMINUS AT WALL

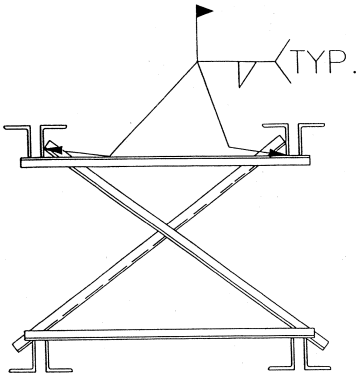


JOISTS PAIR BRIDGING TERMINUS POINT

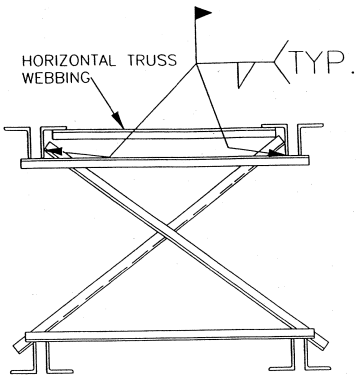


JOISTS PAIR BRIDGING TERMINUS POINT W/HORIZ. TRUSS

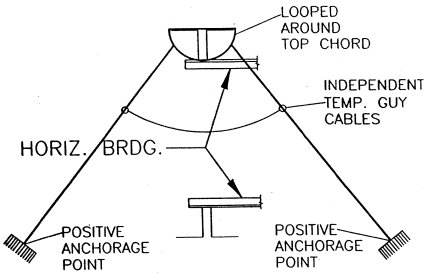


HORIZONTAL BRIDGING TERMINUS POINT SECURED BY TEMP. GUY CABLES

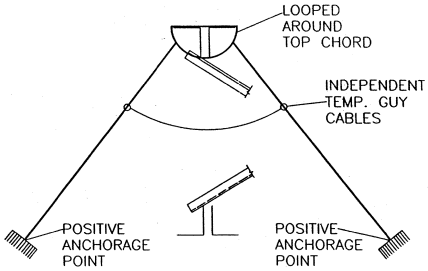


DIAGONAL BRIDGING TERMINUS POINT SECURED BY TEMP. GUY CABLES

## APPENDIX D TO SUBPART R OF PART 1926—ILLUSTRATION OF THE USE OF CONTROL LINES TO DEMARCATE CONTROLLED DECKING ZONES (CDZS): NON-MANDATORY GUIDELINES FOR COMPLYING WITH § 1926.760(c)(3)

(1) When used to control access to areas where leading edge and initial securement of metal deck and other operations connected with leading edge work are taking place, the controlled decking zone (CDZ) is defined by a control line or by any other means that restricts access.

(i) A control line for a CDZ is erected not less than 6 feet (1.8 m) nor more than 90 feet (27.4 m) from the leading edge.

(ii) Control lines extend along the entire length of the unprotected or leading edge