AUTHENTICATED
U.S. GOVERNMENT
INFORMATION
GPO

kilowatts as determined by SAE J1228. This procedure has been incorporated by reference. See §91.6.

t = time in model years

max useful life = maximum useful life specific to the power rating and the application; max useful life = $2\mu_{life}$

sales = the number of eligible sales tracked to the point of first retail sale in the U.S. for the given engine family during the model year.

FEL = the family emission limit for the engine family in grams per kilowatt hour.

CL = compliance level of the in-use testing in g/kW-hr.

μ_{use} = mean use in hours per year. For outboard engines, μ_{use}=34.8 hrs /yr. For personal watercraft, μ_{use}=77.3 hrs/yr;

AF = adjustment factor for the number of tests conducted

No. eng. tested	2*, 4	6	8	10
Adjustment factor	.5	.75	.9	1

*Small volume manufacturer

§91.1308 Maintenance of records.

(a) Any manufacturer that is participating in the in-use credit program set forth in this subpart shall establish, maintain, and retain the records required by §91.209 with respect to its participation in the in-use credit program.

(b) EPA may void *ab initio* a certificate of conformity for an engine family for which the manufacturer fails to retain the records required under this section or to provide such information to the Administrator upon request.

§91.1309 Reporting requirements.

(a) Any manufacturer who participates in the in-use credit program is required to submit an end of the model year in-use testing report either within 90 days of the end of the model year in-use testing of a given model year's engine families, or at the same time as the final certification AB&T report (required under §91.210), whichever is later. The end of the model year in-use testing report must contain the required information and show the calculated credits from all the in-use testing conducted by the manufacturer for a given model year.

(b) Reports shall be submitted to: Manager, Engine Compliance Programs Group 6403–J, U.S. Environmental Protection Agency, 1200 Pennsylvania Ave., NW., Washington, DC 20460.

(c) A manufacturer that fails to submit a timely report as required in paragraph (a) of this section will be considered to not have participated in the in-use credit program.

(d) If EPA or the manufacturer determines that a reporting error occurred on an end of model year report previously submitted to EPA under this subpart, or an engine family in-use testing report submitted to EPA under subpart I, the manufacturer's credits and credit calculations will be recalculated. Erroneous positive credits will be void. Erroneous negative credits may be adjusted by EPA. An update of previously submitted ''point of first retail sale'' information is not considered an error and no increase in the number of credits will be allowed unless an actual error occurred in the calculation of credits due to an error in the ''point of first retail sale'' information from the time of the original end of model year report.

§91.1310 Notice of opportunity for hearing.

Any voiding of an engine family's certificate of conformity under §91.1308(b) of this subpart will occur only after the manufacturer concerned has been offered an opportunity for a hearing conducted in accordance with §§91.512, 91.513, 91.514 and 91.515.

PART 92—CONTROL OF AIR POLLUTION FROM LOCOMOTIVES AND LOCOMOTIVE ENGINES

Subpart A—General Provisions for Emission Regulations for Locomotives and Locomotive Engines

Sec.

92.1 Applicability.
92.2 Definitions.
92.3 Abbreviations.
92.4 Treatment of confidential information.
92.5 Reference materials.
92.6 Regulatory structure.
92.7 General standards.
92.8 Emission standards.
92.9 Compliance with emission standards.
92.10 Warranty period.
92.11 Compliance with emission standards in extraordinary circumstances.
92.12 Interim provisions.

Subpart B—Test Procedures

92.101 Applicability.
92.102 Definitions and abbreviations.
92.103 Test procedures; overview.
92.104 Locomotive and engine testing; overview.
92.105 General equipment specifications.
92.106 Equipment for loading the engine.
92.107 Fuel flow measurement.
92.108 Intake and cooling air measurements.
92.109 Analyzer specifications.
92.110 Weighing chamber and micro-balance.
92.111 Smoke measurement system.
92.112 Analytical gases.
92.113 Fuel specifications.
92.114 Exhaust gas and particulate sampling and analytical system.
92.115 Calibrations; frequency and overview.
92.116 Engine output measurement system calibrations.
92.117 Gas meter or flow instrumentation calibration, particulate measurement.
92.118 Analyzer checks and calibrations.
92.119 Hydrocarbon analyzer calibration.
92.120 NDIR analyzer calibration and checks.
92.121 Oxides of nitrogen analyzer calibration and check.
92.122 Smoke meter calibration.
92.123 Test procedure; general requirements.
92.124 Test sequence; general requirements.
92.125 Pre-test procedures and preconditioning.
92.126 Test run.
92.127 Emission measurement accuracy.
92.128 Particulate handling and weighing.
92.129 Exhaust sample analysis.
92.130 Determination of steady-state concentrations.
92.131 Smoke, data analysis.
92.132 Calculations.
92.133 Required information.

Subpart C—Certification Provisions

92.201 Applicability.
92.202 Definitions.
92.203 Application for certification.
92.204 Designation of engine families.
92.205 Prohibited controls, adjustable parameters.
92.206 Required information.
92.207 Special test procedures.
92.208 Certification.
92.209 Certification with multiple manufacturers or remanufacturers.
92.210 Amending the application and certificate of conformity.
92.211 Emission-related maintenance instructions for purchasers.
92.212 Labeling.
92.213 Submission of locomotive and engine identification numbers.
92.214 Production locomotives and engines.
92.215 Maintenance of records; submittal of information; right of entry.
92.216 Hearing procedures.

Subpart D—Certification Averaging, Banking, and Trading Provisions

92.301 Applicability.
92.302 Definitions.
92.303 General provisions.
92.304 Compliance requirements.
92.305 Credit generation and use calculation.
92.306 Certification.
92.307 Labeling.
92.308 Maintenance of records.
92.309 Reports.
92.310 Notice of opportunity for hearing.

Subpart E—Emission-Related Defect Reporting Requirements, Voluntary Emission Recall Program

92.401 Applicability.
92.402 Definitions.
92.403 Emission defect information report.
92.404 Voluntary emissions recall reporting.
92.405 Alternative report formats.
92.406 Reports filing: record retention.
92.407 Responsibility under other legal provisions preserved.
92.408 Disclaimer of production warranty applicability.

Subpart F—Manufacturer and Remanufacturer Production Line Testing and Audit Programs

92.501 Applicability.
92.502 Definitions.
92.503 General requirements.
92.504 Right of entry and access.
92.505 Sample selection for testing.
92.506 Test procedures.
92.507 Sequence of testing.
92.508 Calculation and reporting of test results.
92.509 Maintenance of records; submittal of information.
92.510 Compliance with criteria for production line testing.
92.511 Remanufactured locomotives: installation audit requirements.
92.512 Suspension and revocation of certificates of conformity.
92.513 Request for public hearing.
92.514 Administrative procedures for public hearing.
92.515 Hearing procedures.
92.516 Appeal of hearing decision.
92.517 Treatment of confidential information.

Subpart G—In-Use Testing Program

92.601 Applicability.
92.602 Definitions.
92.603 General provisions.
92.604 In-use test procedure.

92.605 General testing requirements.
92.606 Maintenance, procurement and testing of in-use locomotives.
92.607 In-use test program reporting requirements.

Subpart H—Recall Regulations

92.701 Applicability.
92.702 Definitions.
92.703 Voluntary emissions recall.
92.704 Notice to manufacturer or remanufacturer of nonconformity; submission of remedial plan.
92.705 Remedial plan.
92.706 Approval of plan: Implementation.
92.707 Notification to locomotive or locomotive engine owners.
92.708 Records and reports.
92.709 Public hearings.

Subpart I—Importation of Nonconforming Locomotives and Locomotive Engines

92.801 Applicability.
92.802 Definitions.
92.803 Admission.
92.804 Exemptions.
92.805 Prohibited acts; penalties.

Subpart J—Exclusion and Exemption Provisions

92.901 Purpose and applicability.
92.902 Definitions.
92.903 Exclusions.
92.904 Exemptions.
92.905 Testing exemption.
92.906 Manufacturer-owned, remanufacturer-owned exemption and display exemption.
92.907 Non-locomotive-specific engine exemption.
92.908 National security exemption.
92.909 Export exemptions.
92.910 Granting of exemptions.
92.911 Submission of exemption requests.
92.912 Staged-assembly exemption.

Subpart K—Requirements Applicable to Owners and Operators of Locomotives and Locomotive Engines

92.1001 Applicability.
92.1002 Definitions.
92.1003 In-use testing program.
92.1004 Maintenance and repair.
92.1005 In-use locomotives.
92.1006 Refueling requirements.
92.1007 Remanufacturing requirements.

Subpart L—General Enforcement Provisions and Prohibited Acts

92.1101 Applicability.
92.1102 Definitions.
92.1103 Prohibited acts.
92.1104 General enforcement provisions.
92.1105 Injunction proceedings for prohibited acts.
92.1106 Penalties.
92.1107 Warranty provisions.
92.1108 In-use compliance provisions.

APPENDIX I TO PART 92—EMISSION-RELATED LOCOMOTIVE AND ENGINE PARAMETERS AND SPECIFICATIONS
APPENDIX II TO PART 92—INTERPRETIVE RULING FOR §92.705—REMEDIAL PLANS
APPENDIX III TO PART 92—SMOKE STANDARDS FOR NON-NORMALIZED MEASUREMENTS
APPENDIX IV TO PART 92—GUIDELINES FOR DETERMINING EQUIVALENCY BETWEEN EMISSION MEASUREMENT SYSTEMS

AUTHORITY: 42 U.S.C. 7401–7671q.

SOURCE: 63 FR 18998, Apr. 16, 1998, unless otherwise noted.

Subpart A—General Provisions for Emission Regulations for Locomotives and Locomotive Engines

§92.1 Applicability.

(a) Except as noted in paragraphs (b), (d) and (e) of this section, the provisions of this part apply to manufacturers, remanufacturers, owners and operators of:

(1) Locomotives and locomotive engines manufactured on or after January 1, 2000; and

(2) Locomotives and locomotive engines manufactured on or after January 1, 1973 and remanufactured on or after January 1, 2000; and

(3) Locomotives and locomotive engines manufactured prior to January 1, 1973, and upgraded on or after January 1, 2000.

(b) The requirements and prohibitions of this part do not apply with respect to:

(1) Steam locomotives, as defined in §92.2;

(2) Locomotives powered solely by an external source of electricity;

(3) Locomotive engines which provide only hotel power (see 40 CFR parts 89 and 1039 to determine if such engines are subject to EPA emission requirements); or

(4) Nonroad vehicles excluded from the definition of locomotive in §92.2, and the engines used in such nonroad vehicles (see 40 CFR parts 86, 89, and

1039 to determine if such vehicles or engines are subject to EPA emission requirements).

(c) For cases in which there are multiple entities meeting the definition of manufacturer or remanufacturer, see § 92.209 for guidance.

(d) The provisions of subpart L of this part apply to all persons.

(e) The provisions of this part do not apply for locomotives that are subject to the emissions standards of 40 CFR part 1033.

[63 FR 18998, Apr. 16, 1998, as amended at 70 FR 40452, July 13, 2005; 73 FR 37194, June 30, 2008]

§ 92.2 Definitions.

(a) The definitions of this section apply to this subpart. They also apply to all subparts of this part, except where noted otherwise.

(b) As used in this part, all terms not defined in this section shall have the meaning given them in the Act:

Act means the Clean Air Act as amended (42 U.S.C. 7401 *et seq.*).

Administrator means the Administrator of the Environmental Protection Agency or his/her authorized representative.

Aftertreatment system or *aftertreatment component* or *aftertreatment technology* means any system or component or technology mounted downstream of the exhaust valve or exhaust port whose design function is to reduce exhaust emissions.

Alcohol fuel means a fuel consisting primarily (more than 50 percent by weight) of one or more alcohols: e.g., methyl alcohol, ethyl alcohol.

Alternator/generator efficiency means the ratio of the electrical power output from the alternator/generator to the mechanical power input to the alternator/generator at the operating point.

Alternator/generator input horsepower means the mechanical horsepower input to the main alternator or generator of a locomotive. For the purpose of calculating brake horsepower, alternator/generator input horsepower does not include any power used to circulate engine coolant, circulate engine lubricant, or to supply fuel to the engine.

Applicable standard means a standard to which a locomotive or locomotive engine is subject; or, where a locomotive or locomotive engine is certified another standard or FEL, applicable standard means the other standard or FEL to which the locomotive or locomotive engine is certified, as allowed by § 92.8. This definition does not apply to subpart D of this part.

Auxiliary emission control device (AECD) means any element of design which senses temperature, locomotive speed, engine RPM, atmospheric pressure, manifold pressure or vacuum, or any other parameter for the purpose of activating, modulating, delaying, or deactivating the operation of any part of the emission control system (including, but not limited to injection timing); or any other feature that causes in-use emissions to be higher than those measured under test conditions, except as allowed by this part.

Auxiliary engine means a locomotive engine that provides hotel power, but does not provide power to propel the locomotive.

Auxiliary power means the power provided by the main propulsion engine to operate accessories such as cooling fans.

Averaging for locomotives and locomotive engines means the exchange of emission credits among engine families within a given manufacturer's, or remanufacturer's, product line.

Banking means the retention of emission credits by a credit holder for use in future calendar year averaging or trading as permitted by the regulations in this part.

Brake horsepower means the sum of the alternator/generator input horsepower and the mechanical accessory horsepower, excluding any power used to circulate engine coolant, circulate engine lubricant, or to supply fuel to the engine.

Calibration means the set of specifications, including tolerances, specific to a particular design, version, or application of a component, or components, or assembly capable of functionally describing its operation over its working range. This definition does apply to Subpart B of this part.

Class I freight railroad means a Class I railroad that primarily transports freight rather than passengers.

Class I railroad means a railroad that has been classified as a Class I railroad by the Surface Transportation Board.

Class II railroad means a railroad that has been classified as a Class II railroad by the Surface Transportation Board.

Class III railroad means a railroad that has been classified as a Class III railroad by the Surface Transportation Board.

Configuration means any subclassification of an engine family which can be described on the basis of gross power, emission control system, governed speed, injector size, engine calibration, and other parameters as designated by the Administrator.

Crankcase emissions means emissions to the atmosphere from any portion of the crankcase ventilation or engine lubrication systems.

Defeat device means an AECD or other control feature that reduces the effectiveness of the emission control system under conditions which may reasonably be expected to be encountered in normal locomotive operation and use, unless the AECD or other control feature has been identified by the certifying manufacturer or remanufacturer in the application for certification, and:

(1) Such conditions are substantially represented by the portion of the federal test procedure during which the applicable emission rates are measured;

(2) The need for the AECD is justified in terms of protecting the locomotive or locomotive engine against damage or accident; or

(3) The AECD does not go beyond the requirements of engine starting.

Deterioration factor means the difference between exhaust emissions at the end of useful life and exhaust emissions at the low mileage test point expressed as either: the ratio of exhaust emissions at the end of useful life to exhaust emissions at the low mileage test point (for multiplicative deterioration factors); or the difference between exhaust emissions at the end of useful life exhaust emissions at the low mileage test point (for additive deterioration factors).

Diesel fuel means any fuel suitable for use in diesel engines, and which is commonly or commercially known or sold as diesel fuel.

Emission control system means those devices, systems or elements of design which control or reduce the emission of substances from an engine. This includes, but is not limited to, mechanical and electronic components and controls, and computer software.

Emission credits represent the amount of emission reduction or exceedance, by a locomotive engine family, below or above the emission standard, respectively. Emission reductions below the standard are considered as ''positive credits,'' while emission exceedances above the standard are considered as ''negative credits.'' In addition, ''projected credits'' refer to emission credits based on the projected applicable production/sales volume of the engine family. ''Reserved credits'' are emission credits generated within a calendar year waiting to be reported to EPA at the end of the calendar year. ''Actual credits'' refer to emission credits based on actual applicable production/sales volume as contained in the end-of-year reports submitted to EPA.

Emission-data engine means an engine which is tested for purposes of emission certification or production line testing.

Emission-data locomotive means a locomotive which is tested for purposes of emission certification or production line testing.

Emission-related defect means a defect in design, materials, or workmanship in a device, system, or assembly described in the approved Application for certification which affects any parameter or specification enumerated in Appendix I of this part.

Emission-related maintenance means that maintenance which substantially affects emissions or which is likely to affect the deterioration of the locomotive or engine with respect to emissions, as described in an approved Application for certification.

Engine family means a group of locomotive or locomotive engine configurations which are expected to have similar emission characteristics throughout the useful lives of the locomotives and engines (see §92.204), and which are (or were) covered (or requested to be

covered) by a specific certificate of conformity.

Engine used in a locomotive means an engine incorporated into a locomotive or intended for incorporation into a locomotive.

Engineering analysis means a summary of scientific and/or engineering principles and facts that support a conclusion made by a manufacturer or remanufacturer, with respect to compliance with the provisions of this part.

EPA Enforcement Officer means any officer or employee of the Environmental Protection Agency so designated in writing by the Administrator or his/her designee.

Ethanol means a fuel that contains at least 50 percent ethanol (ethyl alcohol, (C_2H_5OH)) by volume.

Exhaust emissions means substances (i.e., gases and particles) emitted to the atmosphere from any opening downstream from the exhaust port or exhaust valve of a locomotive engine.

Family Emission Limit means an emission level declared by the certifying manufacturer or remanufacturer to serve in lieu of an otherwise applicable emission standard for certification and compliance purposes in the averaging, banking and trading program. FELs are expressed to the same number of decimal places as the applicable emission standard.

Freshly manufactured locomotive means a locomotive which is powered by a freshly manufactured engine, and which contains fewer than 25 percent previously used parts (weighted by the dollar value of the parts). See 40 CFR 1033.640 for information about how to calculate this.

Freshly manufactured locomotive engine means a new locomotive engine which has not been remanufactured.

Fuel system means the combination of fuel tank(s), fuel pump(s), fuel lines and filters, pressure regulator(s), and fuel injection components (or pressure regulator(s) and carburetor(s) if fuel injection is not employed), fuel system vents, and any other component involved in the delivery of fuel to the engine.

Gaseous fuel means a fuel which is a gas at standard temperature and pressure. This includes both natural gas and liquefied petroleum gas.

Green engine factor means a factor that is applied to emission measurements from a locomotive or locomotive engine that has had little or no service accumulation. The green engine factor adjusts emission measurements to be equivalent to emission measurements from a locomotive or locomotive engine that has had approximately 300 hours of use.

High-altitude means relating to an altitude greater than 4000 feet (1220 meters) and less than 7000 feet (2135 meters), or equivalent observed barometric test conditions of 25.7 to 22.7 inch Hg (88.5 to 78.1 kilopascals).

Hotel power means the power provided by an engine on a locomotive to operate equipment on passenger cars of a train; e.g., heating and air conditioning, lights, etc.

Idle speed means that speed, expressed as the number of revolutions of the crankshaft per unit of time (e.g., rpm), at which the engine is set to operate when not under load for purposes of propelling the locomotive.

Importer means an entity or person who imports locomotives or locomotive engines from a foreign country into the United States (including the Commonwealth of Puerto Rico, the Virgin Islands, Guam, American Samoa, and the Northern Mariana Islands).

Inspect and qualify means to determine that a previously used component or system meets all applicable criteria listed for the component or system in a certificate of conformity for remanufacturing (e.g., determine that the component or system is functionally equivalent to one that has not been used previously).

Installer means an individual or entity which assembles remanufactured locomotives or locomotive engines.

Liquefied petroleum gas means the commercial product marketed as liquefied petroleum gas or propane.

Locomotive means a self-propelled piece of on-track equipment designed for moving or propelling cars that are designed to carry freight, passengers or other equipment, but which itself is not designed or intended to carry freight, passengers (other than those operating the locomotive) or other

equipment. The following other equipment are not locomotives (see 40 CFR parts 86 and 89 for this equipment):

(1) Equipment which is designed for operation both on highways and rails are not locomotives.

(2) Specialized railroad equipment for maintenance, construction, post accident recovery of equipment, and repairs; and other similar equipment, are not locomotives.

(3) Vehicles propelled by engines with total rated horsepower of less than 750 kW (1006 hp) are not locomotives (see 40 CFR parts 86 and 89 for this equipment), unless the owner (including manufacturers) chooses to have the equipment certified under the requirements of this part. Where equipment is certified as a locomotive pursuant to this paragraph (3), it shall be subject to the requirements of this part for the remainder of its service life. For locomotives propelled by two or more engines, the total rated horsepower is the sum of the rated horsepowers of each engine.

Locomotive engine means an engine incorporated into a locomotive or intended for incorporation into a locomotive.

Low hour engine means an engine during the interval between the time that normal assembly operations and adjustments are completed and the time that 300 additional operating hours have been accumulated (including hours accumulated during emission testing if performed).

Low idle speed means a speed which is less than normal idle speed, expressed as the number of revolutions of the crankshaft per unit of time, at which an engine can be set when not under load for purposes of propelling the locomotive.

Low mileage locomotive means a locomotive during the interval between the time that normal assembly operations and adjustments are completed and the time that either 10,000 miles of locomotive operation or 300 additional operating hours have been accumulated (including emission testing if performed).

Malfunction means a condition in which the operation of a component in a locomotive or locomotive engine occurs in a manner other than that specified by the certifying manufacturer or remanufacturer (e.g., as specified in the application for certification); or the operation of the locomotive or locomotive engine in that condition.

Manufacturer means an individual or entity engaged in the manufacturing or assembling of freshly manufactured locomotives or freshly manufactured locomotive engines; or the importing of locomotives or locomotive engines originally manufactured on or after January 1, 1973 and not remanufactured. (See §§92.1(c) and 92.209 for applicability of this term.)

Maximum rated horsepower means the maximum brake horsepower output of an engine.

Mechanical accessory horsepower means the sum of mechanical horsepower generated by an engine to supply accessories. Mechanical accessory horsepower does not include power supplied to the main alternator or generator, power used to circulate engine coolant or engine lubricant, or power used to supply fuel to the engine.

Methanol means a fuel that contains at least 50 percent methanol (methyl alcohol, (CH_3OH)) by volume.

Method of aspiration means the method whereby air for fuel combustion enters the engine (e.g., natural or turbocharged).

Model year means a calendar year; except where the Administrator determines a different production period which includes January 1 of such calendar year.

Natural gas means the commercial product marketed as natural gas whose primary constituent is methane.

New locomotive or *new locomotive engine* means:

(1)(i) A locomotive or locomotive engine the equitable or legal title to which has never been transferred to an ultimate purchaser; or

(ii) A locomotive or locomotive engine which has been remanufactured, but has not been placed back into service.

(2) Where the equitable or legal title to a locomotive or locomotive engine is not transferred prior to its being placed into service, the locomotive or locomotive engine ceases to be new when it is placed into service.

(3) With respect to imported locomotives or locomotive engines, the term ''new locomotive'' or ''new locomotive engine'' means a locomotive or locomotive engine that is not covered by a certificate of conformity under this part at the time of importation, and that was manufactured or remanufactured after the effective date of the emission standards in this part which is applicable to such locomotive or engine (or which would be applicable to such locomotive or engine had it been manufactured or remanufactured for importation into the United States).

(4) Notwithstanding paragraphs (1) through (3) of this definition, locomotives and locomotive engines which were originally manufactured before January 1, 1973 and which have not been upgraded are not new.

(5) Notwithstanding paragraphs (1) through (3) of this definition, locomotives and locomotive engines which are owned by a small railroad and which have never been manufactured or remanufactured into a certified configuration are not new.

Nonconforming locomotive or *nonconforming locomotive engine* means a locomotive or locomotive engine which is not covered by a certificate of conformity prior to importation or being offered for importation (or for which such coverage has not been adequately demonstrated to EPA); or a locomotive or locomotive engine which was originally covered by a certificate of conformity, but which is not in a certified configuration, or otherwise does not comply with the conditions of that certificate of conformity.

(NOTE: Domestic locomotives and locomotive engines which are not covered by a certificate of conformity prior to their introduction into U.S. commerce are considered to be noncomplying locomotives and locomotive engines.)

Non-locomotive-specific engine means an engine that is sold for and used in non-locomotive applications more than for locomotive applications.

Normal idle means relating to the idle throttle-notch position for locomotives that have one throttle-notch position, or the highest the idle throttle-notch position for locomotives that have two throttle-notch positions.

Opacity means the fraction of a beam of light, expressed in percent, which fails to penetrate a plume of smoke as measured and calculated under the provisions of subpart B of this part.

Original manufacture means the event of freshly manufacturing a locomotive or locomotive engine. The date of original manufacture is the date of final assembly; except as provided in § 92.11. Where a locomotive or locomotive engine is manufactured under § 92.11, the date of original manufacture is the date on which the final assembly of locomotive or locomotive engine was originally scheduled.

Original remanufacture means the first remanufacturing of a locomotive or locomotive engine at which the locomotive or locomotive engines is subject to the emission standards of this part.

Oxides of nitrogen means nitric oxide and nitrogen dioxide. Oxides of nitrogen are expressed quantitatively as if the nitric oxide were in the form of nitrogen dioxide (oxides of nitrogen are assumed to have a molecular weight equivalent to nitrogen dioxide).

Passenger locomotive means a locomotive designed and constructed for the primary purpose of propelling passenger trains, and providing power to the passenger cars of the train for such functions as heating, lighting and air conditioning.

Petroleum fuel means a fuel primarily derived from crude oil (e.g., gasoline or diesel fuel).

Power assembly means the components of an engine in which combustion of fuel occurs, and consists of the cylinder, piston and piston rings, valves and ports for admission of charge air and discharge of exhaust gases, fuel injection components and controls, cylinder head and associated components.

Primary fuel means that type of fuel (e.g., diesel fuel) that is consumed in the greatest quantity (mass basis) when the locomotive or locomotive engine is operated in use.

Produce means to manufacture or remanufacture. Where a certificate holder does not actually assemble the locomotives or locomotive engines that it manufactures or remanufactures, produce means to allow other entities to assemble locomotives or locomotive engines under the certificate holder's certificate.

Railroad means a commercial entity that operates locomotives to transport passengers or freight.

Rated horsepower means the maximum horsepower output of a locomotive engine in use.

Remanufacture means:

(1)(i) To replace, or inspect and qualify, each and every power assembly of a locomotive or locomotive engine, whether during a single maintenance event or cumulatively within a five year period; or

(ii) To upgrade a locomotive or locomotive engine; or

(iii) To convert a locomotive or locomotive engine to enable it to operate using a fuel other than it was originally manufactured to use; or

(iv) To install a remanufactured engine or a freshly manufactured engine into a previously used locomotive.

(2) *Remanufacture* also means the act of remanufacturing.

Remanufacture system or *remanufacturing system* means all components (or specifications for components) and instructions necessary to remanufacture a locomotive or locomotive engine in accordance with applicable requirements of this part.

Remanufactured locomotive means either a locomotive which is powered by a remanufactured locomotive engine, or a repowered locomotive.

Remanufactured locomotive engine means a locomotive engine which has been remanufactured.

Remanufacturer means an individual or entity that is engaged in the manufacture or assembly of remanufactured locomotives or locomotive engines, (including: Entities that design or produce the emission-related parts used in remanufacturing; entities that install parts in an existing locomotive or locomotive engine to remanufacture it; and entities that own or operate the locomotive or locomotive engine and provide specifications as to how an engine is to be remanufactured (i.e., specifying who will perform the work, when the work is to be performed, what parts are to be used, or how to calibrate the adjustable parameters of the engine)); or an importer of remanufactured locomotives or locomotive engines. (See §§92.1(c) and 92.209 for applicability of this term.)

Repower means replacement of the engine in a previously used locomotive with a freshly manufactured locomotive engine. Replacing a locomotive engine with a freshly manufactured locomotive engine in a locomotive that has a refurbished or reconditioned chassis such that less than 25 percent of the parts of the locomotive were previously used (as weighted by dollar value) is not repowering.

Repowered locomotive means a locomotive that has been repowered with a freshly manufactured engine.

Service life means the total life of a locomotive or locomotive engine. Service life begins when the locomotive or locomotive engine is originally manufactured and continues until the locomotive or locomotive engine is permanently removed from service.

Small railroad means a railroad that is classified by the Small Business Administration as a small business.

Small remanufacturer means a remanufacturer that is classified by the Small Business Administration as a small business.

Smoke means the matter in the engine exhaust which obscures the transmission of light.

Specified adjustable range means the range of allowable settings for an adjustable component specified by a certificate of conformity.

Specified by a certificate of conformity or *specified in a certificate of conformity* means stated or otherwise specified in a certificate of conformity or an approved application for certification.

Steam locomotive means a historic locomotive propelled by a steam engine.

Switch locomotive means a locomotive designed or used solely for the primary purpose of propelling railroad cars a short distance, and that is powered by an engine with a maximum horsepower rating of 2300 hp or less.

Test locomotive or *locomotive engine* means a locomotive or locomotive engine in a test sample.

Test sample means the collection of locomotives or locomotive engines selected from the population of an engine family for emission testing or auditing.

Throttle means the component, or components, which either directly or indirectly controls the fuel flow to the engine.

Throttle notch means a discrete throttle position for a locomotive with a limited number of throttle positions.

Throttle notch horsepower means the brake horsepower output of an engine corresponding to each throttle notch position, including dynamic-brake settings.

Throttle notch speed means the speed of the engine, expressed as the number of revolutions of the crankshaft per unit of time (e.g., rpm), corresponding to each throttle notch position, including dynamic-brake, and hotel power settings.

Tier 0 means relating to emission standards applicable to locomotives originally manufactured before January 1, 2002; or relating to such locomotives.

1 means relating to emission standards applicable to locomotives originally manufactured on or after January 1, 2002 and before January 1, 2005; or relating to such locomotives.

Tier 2 means relating to emission standards applicable to locomotives originally manufactured on or after January 1, 2005; or relating to such locomotives.

Total Hydrocarbon Equivalent means the sum of the carbon mass contributions of non-oxygenated hydrocarbons, alcohols and aldehydes, or other organic compounds that are measured separately as contained in a gas sample, expressed as gasoline-fueled vehicle hydrocarbons. The hydrogen-to-carbon ratio of the equivalent hydrocarbon is 1.85:1. Total Hydrocarbon Equivalent is abbreviated THCE.

Trading means the exchange of locomotive or locomotive engine emission credits between credit holders.

United States means the States, the District of Columbia, the Commonwealth of Puerto Rico, the Commonwealth of the Northern Mariana Islands, Guam, American Samoa, and the U.S. Virgin Islands.

Upgrade means to modify a locomotive or locomotive engine that was originally manufactured prior to January 1, 1973 (or a locomotive or locomotive engine that was originally manufactured on or after January 1, 1973, and that is not subject to the emission standards of this part), such that it is intended to comply with the Tier 0 standards. Upgrading is a type of remanufacturing.

Useful life means the period during which the locomotive engine is designed to properly function in terms of reliability and fuel consumption, without being remanufactured, specified as work output or miles. It is the period during which a new locomotive or locomotive engine is required to comply with all applicable emission standards.

Volatile liquid fuel means any liquid fuel other than diesel or biodiesel.

Voluntary emission recall means a repair, adjustment, or modification program voluntarily initiated and conducted by a manufacturer or remanufacturer to remedy any emission-related defect for which notification of locomotive or locomotive engine owners has been provided.

[63 FR 18998, Apr. 16, 1998, as amended at 70 FR 40453, July 13, 2005; 73 FR 37194, June 30, 2008]

§ 92.3 Abbreviations.

The abbreviations of this section apply to all subparts of this part and have the following meanings:

ANSI—American National Standards Institute
API—American Petroleum Institute
ASTM—American Society for Testing and Materials
BHP—Brake horsepower
BSCO—Brake specific carbon monoxide
BSHC—Brake specific hydrocarbons
$BSNO_X$—Brake specific oxides of nitrogen
°C—Celsius
cfh—cubic feet per hour
cfm—cubic feet per minute
CFV—Critical flow venturi
CL—Chemiluminescence
CO—Carbon monoxide
CO_2—Carbon dioxide
cu in—cubic inch(es)
CVS—Constant volume sampler
EP—End point
EPA—Environmental Protection Agency
°F—Fahrenheit
FEL—Family emission limit
FID—Flame ionization detector
ft—foot or feet
g—gram(s)
gal—U.S. gallon
GC—Gas Chromatograph
h—hour(s)
H_2O—water
HC—hydrocarbon
HFID—Heated flame ionization detector
Hg—Mercury
hp—horsepower

IBP—Initial boiling point
in—inch(es)
K—Kelvin
kg—kilogram(s)
km—kilometer(s)
kPa—kilopascal(s)
lb—pound(s)
LPG—Liquified Petroleum Gas
m—meter(s)
max—maximum
mg—milligram(s)
mi—mile(s)
min—minute
ml—milliliter(s)
mm—millimeter
mph—miles per hour
mv—millivolt(s)
N_2—nitrogen
NDIR—Nondispersive infrared
NMHC—Non-methane hydrocarbons
NO—nitric oxide
NO_2—nitrogen dioxide
NO_X—oxides of nitrogen
No.—number
O_2—oxygen
pct—percent
PM—particulate matter
ppm—parts per million by volume
ppmC—parts per million, carbon
psi—pounds per square inch
psig—pounds per square inch gauge
°R—Rankin
rpm—revolutions per minute
s—second(s)
SAE—Society of Automotive Engineers
SI—International system of units (i.e., metric)
THCE—Total hydrocarbon equivalent
U.S.—United States
V—volt(s)
vs—versus
W—watt(s)
wt—weight

§ 92.4 Treatment of confidential information.

(a) Any manufacturer or remanufacturer may assert that some or all of the information submitted pursuant to this part is entitled to confidential treatment as provided by 40 CFR part 2, subpart B.

(b) Any claim of confidentiality must accompany the information at the time it is submitted to EPA.

(c) To assert that information submitted pursuant to this part is confidential, a person or manufacturer or remanufacturer must indicate clearly the items of information claimed confidential by marking, circling, bracketing, stamping, or otherwise specifying the confidential information. Furthermore, EPA requests, but does not require, that the submitter also provide a second copy of its submittal from which all confidential information has been deleted. If a need arises to publicly release nonconfidential information, EPA will assume that the submitter has accurately deleted the confidential information from this second copy.

(d) If a claim is made that some or all of the information submitted pursuant to this part is entitled to confidential treatment, the information covered by that confidentiality claim will be disclosed by EPA only to the extent and by means of the procedures set forth in 40 CFR part 2, subpart B.

(e) Information provided without a claim of confidentiality at the time of submission may be made available to the public by EPA without further notice to the submitter, in accordance with 40 CFR 2.204(c)(2)(i)(A).

§ 92.5 Reference materials.

(a) The documents in paragraph (b) of this section have been incorporated by reference. The incorporation by reference was approved by the Director of the Federal Register in accordance with 5 U.S.C. 552(a) and 1 CFR part 51. Copies may be inspected at U.S. EPA, OAR, 401 M St., SW., Washington, DC 20460, or at the National Archives and Records Administration (NARA). For information on the availability of this material at NARA, call 202–741–6030, or go to: *http://www.archives.gov/federal_register/code_of_federal_regulations/ibr_locations.html.*

(b) The following paragraphs and tables set forth the material that has been incorporated by reference in this part:

(1) *ASTM material.* The following table sets forth material from the American Society for Testing and Materials that has been incorporated by reference. The first column lists the number and name of the material. The second column lists the section(s) of the part, other than this section, in which the matter is referenced. The second column is presented for information only and may not be all inclusive. More recent versions of these standards may be used with advance approval of the Administrator. Copies

of these materials may be obtained from American Society for Testing and Materials, 1916 Race St., Philadelphia, PA 19103. The table follows:

Document number and name	40 CFR part 92 reference
ASTM D 86–95, Standard Test Method for Distillation of Petroleum Products.	§ 92.113
ASTM D 93–94, Standard Test Methods for Flash-Point by Pensky-Martens Closed Cup Tester.	§ 92.113
ASTM D 287–92, Standard Test Method for API Gravity of Crude Petroleum and Petroleum Products (Hydrometer Method).	§ 92.113
ASTM D 445–94, Standard Test Method for Kinematic Viscosity of Transparent and Opaque Liquids (the Calculation of Dynamic Viscosity).	§ 92.113
ASTM D 613–95, Standard Test Method for Cetane Number of Diesel Fuel Oil.	§ 92.113
ASTM D 976–91, Standard Test Method for Calculated Cetane Index of Distillate Fuels.	§ 92.113
ASTM D 1319–95, Standard Test Method for Hydrocarbon Types in Liquid Petroleum Products by Fluorescent Indicator Adsorption.	§ 92.113
ASTM D 1945–91, Standard Test Method for Analysis of Natural Gas by Gas Chromatography.	§ 92.113
ASTM D 2622–94, Standard Test Method for Sulfur in Petroleum Products by X-Ray Spectrometry.	§ 92.113
ASTM D 5186–91, Standard Test Method for Determination of Aromatic Content of Diesel Fuels by Supercritical Fluid Chromatography.	§ 92.113
ASTM E 29–93a, Standard Practice for Using Significant Digits in Test Data to Determine Conformance with Specifications.	§§ 92.9, 92.305, 92.509

(2) *SAE material*. The following table sets forth material from the Society of Automotive Engineers that has been incorporated by reference. The first column lists the number and name of the material. The second column lists the section(s) of the part, other than this section, in which the matter is referenced. The second column is presented for information only and may not be all inclusive. Copies of these materials may be obtained from Society of Automotive Engineers International, 400 Commonwealth Dr., Warrendale, PA 15096–0001. The table follows:

Document number and name	40 CFR part 92 reference
SAE Paper 770141, Optimization of a Flame Ionization Detector for Determination of Hydrocarbon in Diluted Automotive Exhausts, by Glenn D. Reschke.	§ 92.119
SAE Recommended Practice J244, Measurement of Intake Air or Exhaust Gas Flow of Diesel Engines.	§ 92.108

(3) *ANSI material*. The following table sets forth material from the American National Standards Institute that has been incorporated by reference. The first column lists the number and name of the material. The second column lists the section(s) of the part, other than this section, in which the matter is referenced. The second column is presented for information only and may not be all inclusive. More recent versions of these standards may be used with advance approval of the Administrator. Copies of these materials may be obtained from American National Standards Institute, 11 West 42nd St., 13th Floor, New York, NY 10036. The table follows:

Document number and name	40 CFR part 92 reference
ANSI B109.1–1992, Diaphragm Type Gas Displacment Meters.	§ 92.117

§ 92.6 Regulatory structure.

This section provides an overview of the regulatory structure of this part.

(a) The regulations of this part 92 are intended to control emissions from in-use locomotives. Because locomotive chassis and locomotive engines are sometimes manufactured or remanufactured separately, the regulations in this part include some provisions that apply specifically to locomotive engines. However, the use of the term ''locomotive engine'' in the regulations in this part does not limit in any manner the liability of any manufacturer or remanufacturer for the emission performance of a locomotive powered by an engine that it has manufactured or remanufactured.

(b) The locomotives and locomotive engines for which the regulations of this part (i.e., 40 CFR part 92) apply are specified by § 92.1, and by the definitions of § 92.2. The point at which a locomotive or locomotive engine becomes subject to the regulations of this part is determined by the definition of ''new locomotive or new locomotive engine'' in § 92.2. Subpart J of this part contains provisions exempting certain locomotives or locomotive engines from the regulations in this part under special circumstances.

(c) To comply with the requirements of this part, a manufacturer or remanufacturer must demonstrate to EPA that the locomotive or locomotive engine meets the applicable standards of §§92.7 and 92.8, and all other requirements of this part. The requirements of this certification process are described in subparts C and D of this part.

(d) Subpart B of this part specifies procedures and equipment to be used for conducting emission tests for the purpose of the regulations of this part.

(e) Subparts E, F, G, and H of this part specify requirements for manufacturers and remanufacturers after certification; that is during production and use of the locomotives and locomotive engines.

(f) Subpart I of this part contains requirements applicable to the importation of locomotives and locomotive engines.

(g) Subpart K of this part contains requirements applicable to the owners and operators of locomotives and locomotive engines.

(h) Subpart L of this part describes prohibited acts and contains other enforcement provisions relating to locomotives and locomotive engines.

(i) Unless specified otherwise, the provisions of this part apply to all locomotives and locomotive engines subject to the emission standards of this part.

§92.7 General standards.

(a) Locomotives and locomotive engines may not be equipped with defeat devices.

(b) New locomotives fueled with a volatile fuel shall be designed to minimize evaporative emissions during normal operation, including periods when the engine is shut down.

(c)(1) Locomotive hardware for refueling locomotives fueled with a volatile fuel shall be designed so as to minimize the escape of fuel vapors.

(2) Hoses used to refuel gaseous-fueled locomotives shall not be designed to be bled or vented to the atmosphere under normal operating conditions.

(3) No valves or pressure relief vents shall be used on gaseous-fueled locomotives except as emergency safety devices, and these shall not operate at normal system operating flows and pressures.

(d) All new locomotives and new locomotive engines subject to any of the standards imposed by this subpart shall, prior to sale, introduction into service, or return to service, be designed to include features that compensate for changes in altitude to ensure that the locomotives or locomotive engines will comply with the applicable emission standards when operated at any altitude less than 7000 feet above sea level.

§92.8 Emission standards.

(a) *Exhaust standards.* Exhaust emissions from locomotives and locomotive engines, when measured in accordance with the provisions of Subpart B of this part, shall comply with both the applicable line-haul duty-cycle standards, and the applicable switch duty-cycle standards of paragraph (a)(1) (and/or the standards of paragraphs (a)(3) and (a)(4) of this section, as applicable) of this section, and the smoke standards of paragraph (a)(2) of this section. Emissions that do not exceed the standards comply with the standards.

(1) *Gaseous and particulate standards.* Gaseous and particulate emission standards are expressed as gram per brake horsepower hour (g/bhp-hr). Nonmethane hydrocarbon standards apply to locomotives and locomotive engines fueled with natural gas, and any combination of natural gas and other fuels where natural gas is the primary fuel; total hydrocarbon equivalent standards apply to locomotives and locomotive engines fueled with an alcohol, and any combination of alcohol and other fuels where alcohol is the primary fuel. Total hydrocarbon standards apply to all other locomotives and locomotive engines; that is, those not fueled by natural gas or alcohol. The line-haul duty-cycle standards and switch duty-cycle standards apply to the respective cycle-weighted emission rates as calculated in subpart B of this part.

(i) *Tier 0.* The following locomotives (and the engines used in the following locomotives) are subject to the Tier 0 emission standards listed in table A8–1 of this section: Locomotives manufactured on, or after, January 1, 1973, and

before January 1, 2002; and upgraded locomotives manufactured prior to January 1, 1973. The standards apply when such a locomotive or locomotive engine is manufactured, remanufactured, or imported on or after January 1, 2002; except where the locomotive was previously certified to one or more FELs under subpart D of this part instead of the applicable standards, in which case, the applicable standards are replaced at each subsequent remanufacture by the FELs specified by the previous certificate. Example: a locomotive that is certified to a NO_X FEL of 8.0 g/bhp-hr must be recertified to a NO_X FEL of 8.0 g/bhp-hr at each subsequent remanufacture, except as allowed by paragraph (a)(4)(iii) of this section.

(ii) *Tier 1.* Locomotives and engines used in locomotives manufactured on, or after, January 1, 2002, and before January 1, 2005 are subject to the Tier 1 standards listed in table A8–2 of this section. The standards apply when such a locomotive or locomotive engine is manufactured or imported, and each time it is remanufactured; except where the locomotive was previously certified to one or more FELs under subpart D of this part instead of the applicable standard, in which case, the standards are replaced at each subsequent remanufacture by the FELs specified by the previous certificate.

(iii) *Tier 2.* Locomotives and engines used in locomotives manufactured on, or after, January 1, 2005 are subject to the Tier 2 standards listed in table A8–3 of this section. The standards apply when such a locomotive or locomotive engine is manufactured or imported, and each time it is remanufactured except where the locomotive was previously certified to one or more FELs under subpart D of this part instead of the applicable standard, in which case, the standards are replaced at each subsequent remanufacture by the FELs specified by the previous certificate.

(2) *Smoke standards.* The smoke opacity standards listed in table A8–4 of this section apply, as specified in the table, to locomotives and locomotive engines subject to the Tier 0, Tier 1, or Tier 2 standards. Smoke emissions, when measured in accordance with the provisions of subpart B of this part, shall not exceed the standards of table A8–4 of this section.

(3) *Alternate standards.* In lieu of the CO and PM standards specified in paragraph (a)(1) of this section, manufacturers and remanufacturers may elect to comply with the alternate CO and PM standards listed in table A8–5 of this section. Manufacturers and remanufacturers electing to comply with these alternate standards must comply with both the CO and PM standards listed in table A8–5 of this section.

(4) *Averaging, banking and trading.* (i) In lieu of the NO_X and/or PM standards specified in paragraph (a)(1) of this section, manufacturers and remanufacturers may elect to include engine families in the averaging, banking, and trading program, the provisions of which are specified in subpart D of this part. The manufacturer or remanufacturer must set family emission limits (FEL) for the applicable duty-cycle. This FEL serves as the standard for that family.

(ii) When a locomotive is certified to an FEL other than the applicable standard, it must be recertified to that same FEL at all subsequent remanufactures, except as specified otherwise in paragraph (a)(4)(iii) of this section.

(iii) After a locomotive has been certified to any given FEL other than the applicable standard, it may be recertified to a different FEL at a subsequent remanufacture, as allowed by subpart D of this part. For subsequent remanufactures (i.e. those remanufactures that occur after the recertification to a different FEL), the locomotive must be recertified to the FEL(s) and standards that were applicable to the locomotive during its previous useful life, except where specified otherwise by subpart D of this part.

(5) *Tables.* The tables referenced in paragraphs (a) (1) through (3) of this section follow:

TABLE A8–1—TIER 0 STANDARDS

[g/bhp-hr]

	Line-haul [1] cycle standard	Switch cycle standard
NO_X	9.5	14.0
PM	0.60	0.72
CO	5.0	8.0
THC	1.00	2.10
NMHC	1.00	2.10

TABLE A8–1—TIER 0 STANDARDS—Continued

[g/bhp-hr]

	Line-haul [1] cycle standard	Switch cycle standard
THCE	1.00	2.10

[1] Line-haul standards do not apply to Tier 0 switch locomotives.

TABLE A8–2—TIER 1 STANDARDS

[g/bhp-hr]

	Line-haul cycle standard	Switch cycle standard
NO_X	7.4	11.0
PM	0.45	0.54
CO	2.2	2.5
THC	0.55	1.20
NMHC	0.55	1.20
THCE	0.55	1.20

TABLE A8–3—TIER 2 STANDARDS

[g/bhp-hr]

	Line-haul cycle standard	Switch cycle standard
NO_X	5.5	8.1
PM	0.20	0.24
CO	1.5	2.4
THC	0.30	0.60
NMHC	0.30	0.60
THCE	0.30	0.60

TABLE A8–4—SMOKE STANDARDS FOR LOCOMOTIVES

[Percent Opacity]

	Steady-state	30-sec peak	3-sec peak
Tier 0	30	40	50
Tier 1	25	40	50
Tier 2	20	40	50

TABLE A8–5—ALTERNATE CO AND PM STANDARDS

[g/bhp-hr]

	Line-haul cycle		Switch cycle	
	CO	PM	CO	PM
Tier 0	10.0	0.30	12.0	0.36
Tier 1	10.0	0.22	12.0	0.27
Tier 2	10.0	0.10	12.0	0.12

(b) No crankcase emissions shall be discharged directly into the ambient atmosphere from any new locomotive or new locomotive engine, except as allowed by paragraph (1) of this paragraph (b).

(1) Discharge of crankcase emissions into the engine exhaust complies with this prohibition, provided crankcase emissions are measured and included with exhaust emissions. Other discharge of crankcase emissions complies with this prohibition, provided crankcase emissions are measured in all certification, production-line, and in-use tests and the masses are added mathematically to the exhaust emissions.

(2) Compliance with this standard is required throughout the entire service life of the locomotive or locomotive engine.

(c) *Notch standards.* (1) Exhaust emissions from locomotives and locomotive engines shall not exceed the notch standards set forth in paragraph (c)(2) of this section, except as allowed in paragraph (c)(3) of this section, when measured using any test procedures under any test conditions.

(2) Notch standards for each pollutant for each notch are calculated from the certified notch emission rate as follows:

$$\text{Notch standard}=(E_x)\times(1.1+(1-E_{LHx}/\text{std}))$$

Where:

E_x=The deteriorated brake-specific emission rate (for pollutant x) for the notch (i.e., the brake-specific emission rate calculated under subpart B of this part, multplied by the deterioration factor in the application for certification expressed as a multiplicative deterioration factor); where x is NO_X. HC (or NMHC or THCE, as applicable), CO or PM.

E_{LHx}=The deteriorated line-haul duty-cycle weighted brake-specific emission rate for pollutant x, as reported in the application for certification.

std=The applicable line-haul duty-cycle standard, or the certified line-haul duty-cycle FEL for locomotives or locomotive engines participating in the averaging, banking and trading program for NOx or PM.

(3) Where exhaust emissions exceed the notch standards set forth in paragraph (c)(2) of this section, the locomotive or locomotive engine is considered to be in compliance with such standards only if:

(i) The same emission controls are applied during the test conditions causing the noncompliance as were applied during certification test conditions (and to the same degree); or

(ii) The exceeding emissions result from a design feature that was described (including its effect on emissions) in the approved application for certification, and is necessary for safety or is otherwise allowed by this part.

[63 FR 18998, Apr. 16, 1998, as amended at 70 FR 40453, July 13, 2005]

§ 92.9 Compliance with emission standards.

(a) The general standards in § 92.7 and the emission standards in § 92.8 apply to the emissions from new locomotives and new locomotive engines for their useful life. The useful life is specified as MW-hrs and years, and ends when either of the values (MW-hrs or years) is exceeded.

(1) The minimum useful life in terms of MW-hrs is equal to the product of the rated horsepower multiplied by 7.50. The minimum useful life in terms of years is ten years. For locomotives or locomotive engines originally manufactured before January 1, 2000 and not equipped with MW-hr meters, the minimum useful life is equal to 750,000 miles or ten years, whichever is reached first.

(2) The certifying manufacturer or remanufacturer shall specify a longer useful life if the locomotive or locomotive engine is designed to last longer than the applicable minimum useful life. A manufacturer's or remanufacturer's recommended time to remanufacture which is longer than the minimum useful life is one indicator of a longer design life.

(3) Manufacturers and remanufacturers of non-locomotive-specific engines (as defined in § 92.2) may petition the Administrator prior to certification to allow a shorter useful life for an engine family containing only non-locomotive-specific engines. This petition must include the full rationale behind the request together with any other supporting evidence. Based on this or other information, the Administrator may allow a shorter useful life.

(4) Remanufacturers of locomotive or locomotive engine configurations that have been previously certified under paragraph (a)(3) of this section to a useful life that is shorter than the value specified in paragraph (a)(1) of this section may certify to that same useful life value without request.

(b) *Certification.* Certification is the process by which manufacturers and remanufacturers apply for and obtain certificates of conformity from EPA that allow the manufacturer or remanufacturer to introduce into commerce new locomotives and/or new locomotive engines for sale or use in the U.S.

(1)(i) Compliance with the applicable emission standards by an engine family must be demonstrated by the certifying manufacturer or remanufacturer before a certificate of conformity may be issued under § 92.208.

(A) Manufacturers shall demonstrate compliance using emission data, measured using the procedures specified in subpart B of this part, from a low mileage locomotive, or a development engine (that is equivalent in design to the locomotive engines being certified), or another low hour engine.

(B) Remanufacturers shall demonstrate compliance using emission data, measured using the procedures specified in subpart B of this part, from a low mileage remanufactured locomotive, or a development engine (that is equivalent in design to the locomotive engines being certified), or another low hour remanufactured engine that was remanufactured in the manner specified in the application for certification.

(ii) The emission values to compare with the standards shall be the emission values of a low mileage locomotive, or development engine, or low hour locomotive engine, adjusted by the deterioration factors developed in accordance with the provisions of paragraph (b)(2) of this section. Before any emission value is compared with the standard, it shall be rounded, in accordance with ASTM E 29–93a (incorporated by reference at § 92.5), to the same number of decimal places as contained in the applicable standard.

(2) Exhaust emission deterioration factors shall be determined by the certifying manufacturer or remanufacturer for each engine family. The manufacturer's or remanufacturer's determination is subject to the requirements of paragraph (b)(2)(iv) of this

section. The deterioration factor relates emissions from low mileage or low hour data to emissions at the end of useful life. If certification data is obtained from a development engine, and the emissions performance of that engine is significantly different from a typical low hour engine, then the deterioration factors may be adjusted for the purpose of certification.

(i) A separate exhaust emission deterioration factor shall be established, as required, for compliance with applicable emission standards for HC, THCE, NMHC, CO, NO_X. particulate and smoke for each engine family.

(ii)(A) For locomotives or locomotive engines not utilizing aftertreatment technology (e.g., catalyst). For HC, THCE, NMHC, CO, NO_X. and PM, additive deterioration factors shall be used; that is, a deterioration factor that when added to the low mileage emission rate equals the emission rate at the end of useful life. However, if the deterioration factor supplied by the manufacturer or remanufacturer is less than zero, it shall be zero for the purposes of this section.

(B) For locomotives or locomotive engines utilizing aftertreatment technology (e.g., catalyst). For HC, THCE, NMHC, CO, NO_X. and PM, Multiplicative deterioration factors shall be used; that is deterioration factors that when multiplied by the low mileage emission rate equal the emission rate at the end of useful life. However, if the deterioration factor supplied by the manufacturer or remanufacturer is less than one, it shall be one for the purposes of this paragraph (b).

(C) For all locomotives and locomotive engines. For smoke, additive deterioration factors shall be used. However, if the deterioration factor supplied by the manufacturer or remanufacturer is less than zero, it shall be zero for the purposes of this paragraph (b).

(iii) In the case of a multiplicative exhaust emission deterioration factor, the factor shall be rounded to three places to the right of the decimal point in accordance with ASTM E 29–93a (incorporated by reference at §92.5). In the case of an additive exhaust emission deterioration factor, the factor shall be established to a minimum of two places to the right of the decimal in accordance with ASTM E 29–93a (incorporated by reference at §92.5).

(iv) Every deterioration factor must be, in the Administrator's judgement, consistent with emissions increases observed in-use based on emission testing of similar locomotives or locomotive engines. Deterioration factors that predict emission increases over the useful life of a locomotive or locomotive engine that are significantly less than the emission increases over the useful life observed from in-use testing of similar locomotives or locomotive engines shall not be used.

[63 FR 18998, Apr. 16, 1998, as amended at 73 FR 59183, Oct. 8, 2008]

§92.10 Warranty period.

Warranties imposed by §92.1107 shall apply for at least the first third of the full useful life of the locomotive or locomotive engine, or for the same period during which the manufacturer or remanufacturer provides any other mechanical warranty, whichever is longer. A copy of the manufacturer's or remanufacturer's warranty shall be submitted with the application for certification.

§92.11 Compliance with emission standards in extraordinary circumstances.

The provisions of this section are intended to address problems that could occur near the date on which more stringent emission standards become effective, such as the transition from the Tier 1 standards to the Tier 2 standards on January 1, 2005.

(a) In appropriate extreme and unusual circumstances which are clearly outside the control of the manufacturer and which could not have been avoided by the exercise of prudence, diligence, and due care, the Administrator may permit a manufacturer, for a brief period, to introduce into commerce locomotives which do not comply with the applicable emission standards if:

(1) The locomotives cannot reasonably be manufactured in such a manner that they would be able to comply with the applicable standards;

(2) The manufacture of the locomotives was substantially completed

prior to the applicability date of the standards from which the manufacturer seeks relief;

(3) Manufacture of the locomotives was previously scheduled to be completed at such a point in time that locomotives would have been included in the previous model year, such that they would have been subject to less stringent standards, and that such schedule was feasible under normal conditions;

(4) The manufacturer demonstrates that the locomotives comply with the less stringent standards that applied to the previous model year's production described in paragraph (a)(3) of this section, as prescribed by subpart C of this part (i.e., that the locomotives are identical to locomotives certified in the previous model year);

(5) The manufacturer exercised prudent planning and was not able to avoid the violation and has taken all reasonable steps to minimize the extent of the nonconformity; and

(6) The manufacturer receives approval from EPA prior to introducing the locomotives into commerce.

(b) Any manufacturer seeking relief under this section shall notify EPA as soon as it becomes aware of the extreme or unusual circumstances.

(c)(1) Locomotives for which the Administrator grants relief under this section shall be included in the engine family for which they were originally intended to be included.

(2) Where the locomotives are to be included in an engine family that was certified to an FEL above the applicable standard, the manufacturer shall reserve credits to cover the locomotives covered by this section, and shall include the required information for these locomotives in the end-of-year report required by subpart D of this part.

(d) In granting relief under this section, the Administrator may also set other conditions as he/she determines to be appropriate, such as requiring payment of fees to negate an economic gain that such relief would otherwise provide to the manufacturer.

§ 92.12 Interim provisions.

Notwithstanding other provisions of this part, the following provisions apply as specified to locomotives and locomotive engines subject to the provisions of this part:

(a) *Tier 0 standards.* In addition to the requirements of § 92.8(a)(1)(i), the following new locomotives and new locomotive engines are subject to the Tier 0 emission standards of § 92.8. The requirements of this paragraph do not apply to passenger locomotives. The requirements of this paragraph (a) provide manufacturers of freshly manufactured locomotives two options for compliance. The first option is to comply with the requirements of paragraphs (a) (1) and (2) of this section, which has the effect of requiring compliance with Tier 0 standards on average beginning on January 1, 2001 for all freshly manufactured and remanufactured locomotives originally manufactured on or after January 1, 1994. The second option requires compliance with the requirements of paragraph (a)(3) of this section that the manufacturer make a remanufacturing system available at a reasonable cost for its primary model for the 1994 through 1997 production period prior to January 1, 2000, and to apply the same emission controls to its new production of similar locomotives. Manufacturers complying with paragraph (a)(3) of this section would be allowed to manufacture and remanufacture other locomotives without a certificate of conformity, prior to January 1, 2002, except as required by paragraph (a)(2)(ii) of this section. Manufacturers may comply with paragraph (a)(3) of this section through compliance with the provisions of paragraph (a)(5) of this section.

(1) *Freshly manufactured locomotives.* Except as provided in paragraph (a)(3) of this section, all freshly manufactured locomotives manufactured on or after January 1, 2001 must comply with the emission standards listed in Table A8–1 of § 92.8 and all other applicable requirements of this part.

(2) *Remanufactured locomotives.* The following locomotives (and engines used in the following locomotives) must comply with the emission standards listed in Table A8–1 of § 92.8 and all other applicable requirements of this part:

(i) Locomotives originally manufactured on or after January 1, 1994, that

are remanufactured on or after January 1, 2001; and

(ii) Locomotives originally manufactured on or after January 1, 1990 for which a remanufacturing system has been certified to Tier 0 standards and is available for use at reasonable cost.

(3) *New model exemption*. (i) Freshly manufactured locomotive models not introduced for widespread production prior to January 1, 1998 are exempt from the requirements of paragraph (a)(1) of this section provided the manufacturer of the locomotive:

(A) Has obtained a certificate of conformity and made available for use at reasonable cost before January 1, 2000, a remanufacturing system for its primary locomotive model (including its primary engine model) originally manufactured between January 1, 1994 and January 1, 1998; and

(B) Complies with the emission standards listed in Table A8–1 of §92.8 and all applicable requirements of this part for all freshly manufactured locomotives manufactured on or after January 1, 2000 that are similar to the primary model described in paragraph (a)(3)(i)(A) of this section.

(ii) New locomotives and locomotive engines that are manufactured and remanufactured by a manufacturer that complies with the requirements of paragraphs (a)(3)(i) (A) and (B) of this section, and that are not similar to the locomotive models identified in paragraphs (a)(3)(i) (A) and (B) of this section are exempt from the requirements of paragraphs (a)(1) and (a)(2)(i) of this section.

(4) Make available at a reasonable cost means to make a certified remanufacturing system available for use where:

(i) The total cost to the owner and user of the locomotive (including initial hardware, increased fuel consumption, and increased maintenance costs) during the useful life of the locomotive is less than $220,000; and

(ii) The initial hardware costs are reasonably related to the technology included in the remanufacturing system and are less than $50,000 for 2-stroke locomotives and 4-stroke locomotives equipped with split cooling systems, or $125,000 for 4-stroke locomotives not equipped with split cooling systems; and

(iii) The system will not increase fuel consumption by more than 3 percent; and

(iv) The remanufactured locomotive will have reliability throughout its useful life that is similar to the reliability the locomotive would have had if it had been remanufactured without the certified remanufacture system.

(5)(i) Instead of the provisions of paragraph (a)(3) of this section, a manufacturer may comply with the emissions standards listed in Table A8–1 of §92.8 and all other applicable requirements of this part with respect to any combination of locomotive models that are manufactured or remanufactured on or after January 1, 2000, provided that the manufacturer has demonstrated to the satisfaction of the Administrator that such locomotives will produce greater emissions reductions than would otherwise occur through compliance with paragraph (a)(3) of this section.

(ii) New locomotives and locomotive engines that are manufactured and remanufactured by a manufacturer that complies with the requirements of paragraph (a)(5)(i) of this section, and that are not similar to the locomotive models identified in paragraph (a)(5)(i) of this section, are exempt from the requirements of paragraphs (a)(1) and (a)(2)(i) of this section.

(b) *Production line and in-use testing*. (1) The requirements of Subpart F of this part (i.e., production line testing) do not apply prior to January 1, 2002.

(2) The testing requirements of subpart F of this part (i.e., production line testing) do not apply to small manufacturers/remanufacturers prior to January 1, 2013. Note that the production line audit requirements apply as specified.

(3) The requirements of Subpart G of this part (i.e., in-use testing) only apply for locomotives and locomotive engines that become new on or after January 1, 2002.

(4) For locomotives and locomotive engines that are covered by a small business certificate of conformity, the requirements of Subpart G of this part (i.e., in-use testing) only apply for locomotives and locomotive engines that

become new on or after January 1, 2007. We will also not require small remanufacturers to perform any in-use testing prior to January 1, 2013.

(c) *Small business certificates of conformity.* (1) Prior to January 1, 2007, small remanufacturers (as defined in § 92.2) may use a modified version of the federal test procedures of subpart B of this part to obtain certificates of conformity. Such certificates are valid only for production that occurs prior to January 1, 2007. Specifically, the following modifications are allowed:

(i) Measurement of HC, CO, and PM may be omitted;

(ii) Dynamometers are not required to meet the specifications of subpart B of this part, provided their design and use is consistent with good engineering practice;

(iii) Other modifications that are necessary because of excessive costs or technical infeasibility may be approved by the Administrator prior to the start of testing.

(2)(i) Small remanufacturers may use test procedures other than those specified in subpart B of this part or in paragraph (c)(1) of this section to obtain certificates of conformity, provided that the test procedures are consistent with good engineering practice, and are approved by the Administrator prior to the start of testing. Such certificates are valid only for production that occurs prior to January 1, 2007.

(ii) The total number of locomotives and locomotive engines that may be remanufactured under a certificate of conformity issued based on the testing described in paragraph (c)(2)(i) of this section shall be subject to the following annual limits for each individual remanufacturer: No more than 300 units in 2003, no more than 200 units in 2004, no more than 100 units in 2005, no more than 50 units in 2006. These sales limits apply to the combined number of locomotives and locomotive engines remanufactured within the calendar year that are covered by an individual remanufacturer's certificates issued under paragraph (c)(2)(i) of this section.

(3) Upon request, and prior to January 1, 2007, the Administrator may modify other certification requirements, as appropriate, for small remanufacturers.

(4) Remanufacturers certifying under this paragraph (c) shall provide along with their application for certification a brief engineering analysis describing the emission control technology to be incorporated in the remanufactured locomotive or locomotive engine, and demonstrating that such controls will result in compliance with the applicable standards.

(d) *Early banking of emission credits.* (1) Consistent with the provisions of subpart D of this part, NOx and PM emission credits may be generated from Tier 0 locomotives and locomotive engines prior to the applicable effective compliance date of the Tier 0 standard (i.e., the effective compliance date in § 92.8(a)(1)(i) or the effective compliance dates of paragraph (a) of this section, as applicable), relative to baseline emission rates.

(2)(i) Credits generated under this paragraph (d) that are granted or transferred to the owner or primary operator of the locomotives or locomotive engines generating credits may be used without restriction.

(ii) Credits generated under this paragraph (d) that are not granted or transferred to the owner or primary operator of the locomotives or locomotive engines generating credits may not be used for compliance with the Tier 0 standards for 2002 or later model years.

(3)(i) Prior to January 1, 2000, the provisions of this paragraph (d) apply to all locomotives and locomotive engines.

(ii) During the period January 1, 2000 through December 31, 2001, the provisions of this paragraph (d) apply only to engine families that include only locomotives and/or locomotive engines originally manufactured prior to January 1, 1990.

(iii) The provisions of this paragraph (d) other than the provisions of paragraph (d)(2) of this section do not apply to any locomotives and locomotive engines manufactured or remanufactured on or after January 1, 2002.

(4)(i) NO_X credits generated under this paragraph (d) shall be calculated as specified in § 92.305, except that the

applicable standard shall be replaced by:

(A) 10.5 g/bhp-hr for the line-haul cycle standards, and 14.0 g/bhp-hr for the switch standards; or

(B) For remanufactured locomotives, a measured baseline emission rate for the configuration with the lowest NO_X emission rate in the applicable engine family that is approved in advance by the Administrator.

(ii) PM credits generated under this paragraph (d) shall be calculated as specified in §92.305, except that the applicable standard shall be replaced by:

(A) 0.20 g/bhp-hr for the line-haul cycle standards, and 0.24 g/bhp-hr for the switch standards; or

(B) For remanufactured locomotives, a measured baseline emission rate for the configuration with the lowest NO_X emission rate in the applicable engine family that is approved in advance by the Administrator.

(iii) The proration factor for all credits generated under this paragraph (d) shall be 0.143.

(5) Locomotives and locomotive engines generating credits under this paragraph (d) must meet all applicable requirements of this part.

(e) *Particulate notch standards.* For model year 2006 and earlier locomotives, the particulate notch standard shall be calculated as:

$$\text{Notch standard} = (E_X) \times (1.2 + (1 - E_{LHx}/\text{std}))$$

(f) *Passenger locomotives.* Passenger locomotives originally manufactured before January 1, 2002 are exempt from the requirements and prohibitions of this part for model years through 2006. New passenger locomotives and locomotive engines produced on or after January 1, 2007 shall comply with all applicable requirements of this part.

(g) *Tier 0 locomotive labels.* Remanufacturers may use identical labels for locomotives and engines for Tier 0 locomotives, provided the remanufacturer demonstrates to EPA that they will supply two labels (one for the locomotive and one for the engine) only with those remanufacturing systems being applied to locomotives that have not been previously labeled (i.e., locomotives that have not been previously certified). For other locomotives, the remanufacturer may only supply one label.

(h) *Labels for calendar year 2005.* During calendar year 2005, manufacturers and remanufacturers may comply with the labeling requirements that were applicable during calendar year 2004, instead of the labeling requirements specified in §92.212(c)(2)(v).

(i) *Diesel test fuels.* Manufacturers and remanufacturers may use LSD or ULSD test fuel to certify to the standards of this part, instead of the otherwise specified test fuel, provided PM emissions are corrected as described in this paragraph (i). Measure your PM emissions and determine your cycle-weighted emission rates as specified in subpart B of this part. If you test using LSD, add 0.04 g/bhp-hr to these weighted emission rates to determine your official emission result. If you test using ULSD, add 0.05 g/bhp-hr to these weighted emission rates to determine your official emission result.

(j) *Subchapter U provisions.* For model years 2008 through 2012, certain locomotives will be subject to the requirements of this part 92 while others will be subject to the requirements of 40 CFR subchapter U. This paragraph (j) describes allowances for manufacturers or remanufacturers to ask for flexibility in transitioning to the new regulations.

(1) You may ask to use a combination of the test procedures of this part and those of 40 CFR part 1033. We will approve your request if you show us that it does not affect your ability to show compliance with the applicable emission standards. Generally this requires that the combined procedures would result in emission measurements at least as high as those that would be measured using the procedures specified in this part. Alternatively, you may demonstrate that the combined effects of the procedures is small relative to your compliance margin (the degree to which your locomotives are below the applicable standards).

(2) You may ask to comply with the administrative requirements of 40 CFR part 1033 and 1068 instead of the equivalent requirements of this part.

[63 FR 18998, Apr. 16, 1998, as amended at 70 FR 40453, July 13, 2005; 73 FR 37194, June 30, 2008]

Subpart B—Test Procedures

§ 92.101 Applicability.

Provisions of this subpart apply to tests performed by the Administrator, certificate holders, other manufacturers and remanufacturers of locomotives or locomotive engines, railroads (and other owners and operators of locomotives), and their designated testing laboratories. This subpart contains gaseous emission test procedures, particulate emission test procedures, and smoke test procedures for locomotives and locomotive engines.

§ 92.102 Definitions and abbreviations.

The definitions and abbreviations of subpart A of this part apply to this subpart. The following definitions and abbreviations, as well as those found in § 92.132 (Calculations), also apply:

Accuracy means the difference between the measured value and the true value, where the true value is determined from NIST traceable measurements where possible, or otherwise determined by good engineering practice.

Calibration means the act of calibrating an analytical instrument using known standards.

Calibration gas means a gas of known concentration which is used to establish the response curve of an analyzer.

Good engineering practice means those methods and practices which the Administrator determines to be consistent with scientific and engineering principles.

Hang-up refers to the process of hydrocarbon molecules being adsorbed, condensed, or by any other method removed from the sample flow prior to reaching the instrument detector. It also refers to any subsequent desorption of the molecules into the sample flow when they are assumed to be absent.

Parts per million, carbon or *ppmC* means the concentration of an organic compound in a gas expressed as parts per million (by volume or by moles) multiplied by the number of carbon atoms in a molecule of that compound.

Precision means the standard deviation of replicated measurements, or one-half of the readability, whichever is greater; except where explicitly noted otherwise.

Readability means the smallest difference in measured values that can be detected. For example, the readability for a digital display with two decimal places would be 0.01.

Span gas means a gas of known concentration which is used routinely to set the output level of an analyzer.

Standard conditions and *standard temperature and pressure* mean 68 °F (20 °C) and 29.92 in Hg. (101.3 kPa).

§ 92.103 Test procedures; overview.

(a) This subpart contains procedures for exhaust emission tests of locomotives and locomotive engines. The procedures specified here are intended to measure brake-specific mass emissions of organic compounds (hydrocarbons for locomotives using petroleum diesel fuel), oxides of nitrogen, particulates, carbon monoxide, carbon dioxide, and smoke in a manner representative of a typical operating cycle.

(b)(1) The sampling systems specified in this subpart are intended to collect representative samples for analysis, and minimize losses of all analytes.

(i) For gaseous emissions, a sample of the raw exhaust is collected directly from the exhaust stream and analyzed during each throttle setting.

(ii) Particulates are collected on filters following dilution with ambient air of a separate raw exhaust sample.

(2) Analytical equipment is identical for all fuel types, with the exception of the systems used to measure organics (*i.e.*, hydrocarbons, alcohols, and aldehydes); diesel-fueled and biodiesel-fueled locomotives *Parts per million* and locomotive engines require a heated, continuous hydrocarbon detector; natural gas-fueled locomotives and locomotive engines require a continuous hydrocarbon detector and a methane detector; alcohol-fueled locomotives and locomotive engines require a heated hydrocarbon detector, alcohol sampling and detection systems, and aldehyde sampling and detection systems. Necessary equipment and specifications appear in §§ 92.105 through 92.111.

(3) Fuel specifications for emission testing are specified in § 92.113. Analytical gases are specified in § 92.112.

(c) The power produced by the engine is measured at each throttle setting.

(d) The fuel flow rate for each throttle setting is measured in accordance with § 92.107.

(e) Locomotives and locomotive engines are tested using the test sequence as detailed in §§ 92.124 and 92.126.

(f) Alternate sampling and/or analytical systems may be used if shown to yield equivalent results, and if approved in advance by the Administrator. Guidelines for determining equivalency are found in Appendix IV of this part.

(g) At the time of the creation of this part, essentially all locomotives and locomotive engines subject to the standards of this part were designed to use diesel fuel. Therefore, the testing provisions of this subpart focus primarily on that fuel. Some provisions for fuels other than diesel are also included. If a manufacturer or remanufacturer of locomotives or locomotive engines, or a user of locomotives, or other party wishes or intends to use a fuel other than diesel in locomotives or locomotive engines, it shall notify the Administrator, who shall specify those changes to the test procedures that are necessary for the testing to be consistent with good engineering practice. The changes made under this paragraph (g) shall be limited to:

(1) Exhaust gas sampling and analysis;

(2) Test fuels; and

(3) Calculations.

§ 92.104 Locomotive and engine testing; overview.

(a) The test procedures described here include specifications for both locomotive testing and engine testing. Unless specified otherwise in this subpart, all provisions apply to both locomotive and engine testing.

(b)(1) The test procedures for engine testing are intended to produce emission measurements that are essentially identical to emission measurements produced during locomotive testing using the same engine configuration. The following requirements apply for all engine tests:

(i) Engine speed setpoints for each mode shall be within 2 percent of the speed of the engine when it is operated in the locomotive. Engine load setpoints for each mode shall be within 2 percent (or 3.0 horsepower, whichever is greater) of the load of the engine when it is operated in the locomotive.

(ii) The temperature of the air entering the engine after any charge air cooling shall be within 5 °F of the typical intake air temperature when the engine is operated in the locomotive under similar ambient conditions. Auxiliary fan(s) may be used to maintain engine cooling during operation on the dynamometer.

(iii) The engine air inlet system used during testing shall have an air inlet restriction within 1 inch of water of the upper limit of a typical engine as installed with clean air filters, as established by the manufacturer or remanufacturer for the engine being tested.

(2) Testers performing engine testing under this subpart shall not use test procedures otherwise allowed by the provisions of this subpart where such procedures are not consistent with good engineering practice and the regulatory goal specified in paragraph (b)(1) of this section.

(c) Provisions that specify different requirements for locomotive and/or engine testing are described in §§ 92.106, 92.108(a) and (b)(1), 92.111(b)(2) and (c), 92.114(a)(2)(ii), (b)(3)(ii), (c)(2)(iii)(A) and (d), 92.115(c), 92.116, 92.123(a)(2) and (b), 92.124(d), 92.125(a) and (b), 92.126(a)(7)(iii)(A).

[63 FR 18998, Apr. 16, 1998, as amended at 70 FR 40453, July 13, 2005]

§ 92.105 General equipment specifications.

(a) *Chart recorders.* (1) The recommended minimum chart speed for gaseous measurements is 1 cm per minute. (Higher chart speeds are required for smoke measurements during the acceleration phases of the test sequence.)

(2) All chart recorders (analyzers, torque, rpm, etc.) shall be provided with automatic markers which indicate ten second intervals. Preprinted chart paper (ten second intervals) may be used in lieu of the automatic markers provided the correct chart speed is used. (Markers which indicate 1 second

intervals are required for smoke measurements during the acceleration phases of the test sequence.)

(b) *Automatic data collection.* (1) In lieu of the use of chart recorders, automatic data collection equipment may be used to record all required data. The automatic data collection equipment must be capable of sampling at least two records per second.

(2) Other means may be used provided they produce a permanent visual data record of a quality equal to or better than those required by this subpart (e.g., tabulated data, traces, or plots).

(c) *Temperature measurements.* (1) The following temperature measurements shall be accurate to within 1.0 °F (0.6 °C):

(i) Temperature measurements used in calculating the engine intake humidity;

(ii) The temperature of the fuel, in volume measuring flow rate devices;

(iii) The temperature of the sample within the water trap(s);

(iv) Temperature measurements used to correct gas volumes (e.g., to standard conditions) or to calculate mass or moles of a sample.

(2) All other temperature measurements shall be accurate within 3.0 °F (1.7 °C).

(d) *Electrical measurements.* Instruments used to measure engine power output shall comply with the requirements of § 92.106.

(e) *Pressure measurements.* (1) Gauges and transducers used to measure any pressures used to correct gas volumes (e.g., to standard conditions) or to calculate mass or moles of a sample shall have an accuracy and precision of 0.1 percent of absolute pressure at point or better.

(2) Gauges and transducers used to measure any other pressures shall have an accuracy and precision of 1 percent of absolute pressure at point or better.

[63 FR 18998, Apr. 16, 1998, as amended at 70 FR 40453, July 13, 2005]

§ 92.106 Equipment for loading the engine.

For purposes of placing the required load on the engine during an emissions test, either the equipment specified in paragraph (a) of this section, or the equipment specified in paragraph (b) of this section may be used.

(a) *Locomotive testing.* (1) The equipment required for loading the locomotive engine-alternator/generator assembly electrically, and for measurement of the electrical power output from the alternator/generator consists of the following, either in total or in part: electrical resistance load bank; fans or other means for cooling of the load bank; wattmeter, including phase angle compensation; meter(s) for measurement of the current through the load bank (a calibrated electrical shunt and voltmeter is allowed for current measurement); meter(s) to measure the voltage across the load bank; and electrical cable to connect the alternator/generator to the load bank. Many locomotives are equipped with an internal electrical resistance load bank and fans for cooling of the load bank; when so equipped, the locomotive load bank may be used for purposes of loading the engine during emissions tests.

(2) The combination of instruments (meters) used to measure engine or alternator/generator power output (wattmeter, ammeter, voltmeter) shall have accuracy and precision such that the accuracy of the measured alternator/generator power out is better than:

(i) 2 percent of point at all power settings except idle and dynamic brake; and

(ii) Less accuracy and precision is allowed at idle and dynamic brake, consistent with good engineering practice. Equipment with accuracy or precision worse than 20 percent of point is not allowed.

(3) The efficiency curve for the alternator/generator, shall specify the efficiency at each test point. The manufacturer or remanufacturer shall provide EPA with a detailed description of the procedures used to establish the alternator/generator efficiency.

(b) *Engine testing.* (1) For engine testing using a dynamometer, the engine dynamometer system must be capable of controlling engine torque and speed simultaneously under steady speed operation, during accelerations where the rate of change in torque and speed is representative of those changes which occur when the engine is operating in a

locomotive. It must also be capable of performing the test sequence described in this subpart. In addition to these general requirements, the engine or dynamometer readout signals for speed and torque shall meet the following accuracy specifications:

(i) Engine speed readout shall be accurate to within ±2 percent of the absolute standard value, as defined in § 92.116 of this part.

(ii) Engine flywheel torque readout shall be accurate to within ±2 percent of the NIST ''true'' value torque at all power settings above 10 percent of full-scale, and accurate to within ±5 percent of the NIST ''true'' value torque at power settings at or below 10 percent of full-scale.

(2) For engine testing using a locomotive alternator/generator instead of a dynamometer, the equipment used shall comply with the requirements of paragraph (a) of this section.

[63 FR 18998, Apr. 16, 1998, as amended at 70 FR 40453, July 13, 2005]

§ 92.107 Fuel flow measurement.

(a) *Fuel flow measurement for locomotive and engine testing.* The rate of fuel consumption by the engine must be measured with equipment conforming to the following:

(1) The fuel flow rate measurement instrument must have a minimum accuracy of ±2 percent of measurement flow rate for each measurement range used. An exception is allowed at idle where the minimum accuracy is ±10 percent of measured flow rate for each measurement range used. The measurement instrument must be able to comply with this requirement with an averaging time of one minute or less, except for idle, dynamic brake, and notches 1 and 2 where the instrument must be able to comply with this requirement with an averaging time of three minutes or less.

(2) The controlling parameters are the elapsed time measurement of the event and the weight or volume measurement. Restrictions on these parameters are:

(i) The error in the elapsed time measurement of the event must not be greater than 1 percent of the absolute event time. This includes errors in starting and stopping the clock as well as the period of the clock.

(ii) If the mass of fuel consumed is measured by discrete weights, then the error in the actual weight of the fuel consumed must not be greater than ±1 percent of the measuring weight. An exception is allowed at idle, where the error in the actual weight of the fuel consumed must not be greater than ±2 percent of the measuring weight.

(iii) If the mass of fuel consumed is measured electronically (load cell, load beam, etc.), the error in the actual weight of fuel consumed must not be greater than ±1 percent of the full-scale value of the electronic device.

(iv) If the mass of fuel consumed is measured by volume flow and density, the error in the actual volume consumed must not be greater than ±1 percent of the full-scale value of the volume measuring device.

(3) For devices that have varying mass scales (electronic weight, volume, density, etc.), compliance with the requirements of paragraph (a)(1) of this section may require a separate flow measurement system for low flow rates.

(b) *Calibration.* Fuel flow rate measurement devices shall be calibrated against an independent measurement of the total mass of fuel dispensed during a fixed amount of time in accordance with the following provisions:

(1) Measurement of the total mass shall have an accuracy and precision of 1 percent of point, or better.

(2) Fuel measurements shall be performed for at least 10 flow rates evenly distributed over the entire range of fuel flow rates used during testing.

(3) For each flow rate, either the total mass of fuel dispense must exceed 5.0 kilograms (11.0 pounds), or the length of time during which the fuel is dispensed must exceed 30 minutes. In all cases, the length of time during which fuel is dispensed must be at least 180 seconds.

§ 92.108 Intake and cooling air measurements.

(a) *Intake air flow measurement.* Measurement of the flow rate of intake air into the engine is allowed for engine testing, but not required. When it is

measured, the measurement technique shall conform to the following:

(1) The air flow measurement method used must have a range large enough to accurately measure the air flow over the engine operating range during the test. Overall measurement accuracy must be ±2 percent of full-scale value of the measurement device for all modes except idle. For idle, the measurement accuracy shall be ±5 percent or less of the full-scale value. The Administrator must be advised of the method used prior to testing.

(2) Corrections to the measured air mass flowrate shall be made when an engine system incorporates devices that add or subtract air mass (air injection, bleed air, etc.). The method used to determine the air mass from these devices shall be approved by the Administrator.

(3) Measurements made in accordance with SAE recommended practice J244 (incorporated by reference at § 92.5) are allowed.

(b) *Humidity and temperature measurements.* (1) Air that has had its absolute humidity altered is considered humidity-conditioned air. For this type of intake air supply, the humidity measurements must be made within the intake air supply system, and after the humidity conditioning has taken place.

(2) Humidity measurements for nonconditioned intake air supply systems shall be made as closely as possible to the point at which the intake air stream enters the locomotive, or downstream of that point.

(3) Temperature measurements of engine intake air, engine intake air after compression and cooling in the charge air cooler(s) (engine testing only), and air used to cool the charge air after compression, and to cool the engine shall be made as closely as possible to obtain accurate results based on engineering judgement. Measurement of ambient temperature for locomotive testing shall be made within 48 inches of the locomotive, at a location that minimizes the effect of heat generated by the locomotive on the measured temperature.

(4) Temperature measurements shall comply with the requirements of § 92.105(c).

(5) Humidity measurements shall be accurate within 2 percent of the measured absolute humidity.

§ 92.109 Analyzer specifications.

(a) *General analyzer specifications*—(1) *Analyzer response time.* Analyzers for THC, CO_2, CO, and NO_X must respond to an instantaneous step change at the entrance to the analyzer with a response equal to 95 percent of that step change in 6.0 seconds or less on all ranges used. The step change shall be at least 60 percent of full-scale chart deflection. For NO_X analyzers using a water trap, the response time increase due to the water trap and associated plumbing need not be included in the analyzer response time.

(2) *Precision.* The precision of the analyzers for THC, CO_2, CO, and NO_X must be no greater than ±1 percent of full-scale concentration for each range used above 155 ppm (or ppmC), or ±2 percent for each range used below 155 ppm (or ppmC). The precision is defined as 2.5 times the standard deviation(s) of 10 repetitive responses to a given calibration or span gas.

(3) *Noise.* The analyzer peak-to-peak response to zero and calibration or span gases over any 10-second period shall not exceed 2 percent of full/scale chart deflection on all ranges used.

(4) *Zero drift.* For THC, CO_2, CO, and NO_X analyzers, the zero-response drift during a 1-hour period shall be less than 2 percent of full-scale chart deflection on the lowest range used. The zero-response is defined as the mean response including noise to a zero-gas during a 30-second time interval.

(5) *Span drift.* For THC, CO_2, CO, and NO_X analyzers, the span drift during a 1-hour period shall be less than 2 percent of full-scale chart deflection on the lowest range used. The analyzer span is defined as the difference between the span-response and the zero-response. The span-response is defined as the mean response including noise to a span gas during a 30-second time interval.

(b) *Carbon monoxide and carbon dioxide analyzer specifications.* (1) Carbon monoxide and carbon dioxide measurements are to be made with nondispersive infrared (NDIR) analyzers.

(2) The use of linearizing circuits is permitted.

(3) The minimum water rejection ratio (maximum CO_2 interference) as measured in § 92.120(a) shall be:

(i) For CO analyzers, 1000:1.

(ii) For CO_2 analyzers, 100:1.

(4) The minimum CO_2 rejection ratio (maximum CO_2 interference) as measured in § 92.120(b) for CO analyzers shall be 5000:1.

(5) *Zero suppression*. Various techniques of zero suppression may be used to increase readability, but only with prior approval by the Administrator.

(6) Option: if the range of CO concentrations encountered during the different test modes is too broad to allow accurate measurement using a single analyzer, then multiple CO analyzers may be used.

(c) *Hydrocarbon analyzer specifications*. (1) Hydrocarbon measurements are to be made with a heated flame ionization detector (HFID) analyzer. An overflow sampling system is recommended but not required. (An overflow system is one in which excess zero gas or span gas spills out of the probe when zero or span checks of the analyzer are made.

(i) *Option*. A non-heated flame ionization detector (FID) that measures hydrocarbon emissions on a dry basis is permitted for petroleum fuels other than diesel and biodiesel; Provided, that equivalency is demonstrated to the Administrator prior to testing. With the exception of temperatures, all specifications contained in Subpart B of this part apply to the optional system.

(ii) The analyzer shall be fitted with a constant temperature oven housing the detector and sample-handling components. It shall maintain temperature with 3.6 °F (2 °C) of the set point. The detector, oven, and sample-handling components within the oven shall be suitable for continuous operation at temperatures to 395 °F (200 °C).

(iii) Fuel and burner air shall conform to the specifications in § 92.112(e).

(iv) The percent of oxygen interference must be less than 3 percent, as specified in § 92.119(3).

(v) *Premixed burner air*. (A) For diesel and biodiesel fueled engines, premixing a small amount of air with the HFID fuel prior to combustion within the HFID burner is not recommended as a means of improving oxygen interference ($\%O_2I$). However, this procedure may be used if the engine manufacturer demonstrates on each basic combustion system (i.e., four-cycle direct injection, two-cycle direct injection, four-cycle indirect injection, etc.) that an HFID using this procedure produces comparable results to an HFID not using this procedure. These data must be submitted to the Administrator for his/her approval prior to testing.

(B) For engines operating on fuels other than diesel or biodiesel, premixing burner air with the HFID fuel is not allowed.

(2) *Methane analyzer*. The analytical system for methane consists of a gas chromatograph (GC) combined with a flame ionization detector (FID).

(3) *Alcohols and Aldehydes*. The sampling and analysis procedures for alcohols and aldehydes, where applicable, shall be approved by the Administrator prior to the start of testing. Procedures are allowed if they are consistent with the general requirements of 40 CFR part 1065, subpart I, for sampling and analysis of alcohols and aldehydes, and with good engineering practice.

(4) Other methods of measuring organics that are shown to yield equivalent results can be used upon approval of the Administrator prior to the start of testing.

(d) *Oxides of nitrogen analyzer specifications*. (1) Oxides of nitrogen are to be measured with a chemiluminescence (CL) analyzer.

(i) The NO_X sample must be heated per § 92.114 up to the NO_2 to NO converter.

(ii) For high vacuum CL analyzers with heated capillary modules, supplying a heated sample to the capillary module is sufficient.

(iii) The NO_2 to NO converter efficiency shall be at least 90 percent.

(iv) The CO_2 quench interference must be less than 3.0 percent as measured in § 92.121(a).

[63 FR 18998, Apr. 16, 1998, as amended at 70 FR 40454, July 13, 2005]

§ 92.110 Weighing chamber and microbalance.

(a) *Ambient conditions*—(1) *Temperature*. The temperature of the chamber (or room) in which the particulate filters are conditioned and weighed shall be maintained at a measured temperature between 19 °C and 25 °C during all filter conditioning and weighing.

(2) *Humidity*. The relative humidity of the chamber (or room) in which the particulate filters are conditioned and weighed shall be 45±8 percent during all filter conditioning and weighing. The dew point shall be 6.4 to 12.4 °C.

(b) *Weighing balance specifications*. The microbalance used to determine the weights of all filters shall have a precision (standard deviation) of no more than 20 micrograms and readability down to 10 micrograms or lower.

(c) *Reference filters*. The chamber (or room) environment shall be free of any ambient contaminants (such as dust) that would settle on the particulate filters during their stabilization. It is required that at least two unused reference filters remain in the weighing room at all times in covered (to reduce dust contamination) but unsealed (to permit humidity exchange) petri dishes.

(1) These reference filters shall be placed in the same general area as the sample filters. These reference filters shall be weighed within 4 hours of, but preferably at the same time as, the sample filter weighings.

(2) If the average weight of the reference filters changes between sample filter weighings by ±5.0 percent (±7.5 if the filters are weighed in pairs) or more of the target nominal filter loading (the recommended nominal loading is 0.5 milligrams per 1075 square millimeters of stain area), then all sample filters in the process of stabilization shall be discarded and the emissions tests repeated.

(3) If the average weight of the reference filters decreases between sample filter weighings by more than 1.0 percent but less than 5.0 percent of the nominal filter loading then the manufacturer or remanufacturer has the option of either repeating the emissions test or adding the average amount of weight loss to the net weight of the sample.

(4) If the average weight of the reference filters increases between sample filter weighing by more than 1.0 percent but less than 5.0 percent of the nominal filter loading, then the manufacturer or remanufacturer has the option of either repeating the emissions test or accepting the measured sample filter weight values.

(5) If the average weight of the reference filters changes between sample filter weighings by not more than ±1.0 percent, then the measured sample filter weights shall be used.

(6) The reference filters shall be changed at least once a month, but never between clean and used weighings of a given sample filter. More than one set of reference filters may be used. The reference filters shall be the same size and material as the sample filters.

§ 92.111 Smoke measurement system.

(a) *Schematic drawing*. Figure B111–1 of this section is a schematic drawing of the optical system of the light extinction meter, as follows:

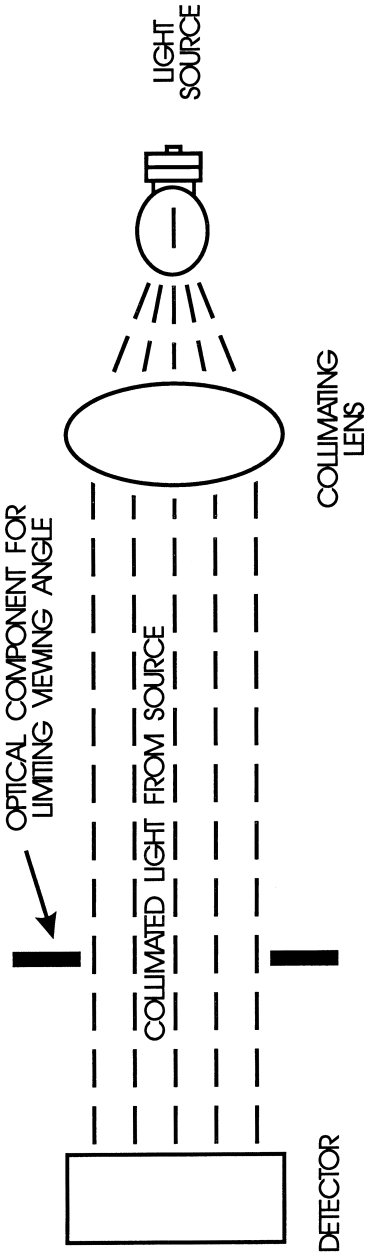

Figure B111-1 SMOKEMETER OPTICAL SYSTEM (SCHEMATIC)

(b) *Equipment*. The following equipment shall be used in the system.

(1) *Adapter*. The smokemeter optical unit may be mounted on a fixed or movable frame. The normal unrestricted shape of the exhaust plume shall not be modified by the adaptor, the meter, or any ventilation system

used to remove the exhaust from the test site. Distortion due to the gaseous or particulate sample probes, or the exhaust duct is allowed subject to the provisions of § 92.114.

(2) *Wind shielding*. Tests shall not be conducted under excessively windy conditions. Winds are excessive if they disturb the size, shape, or location of the exhaust plume in the region where exhaust samples are drawn or where the smoke plume is measured. Tests may be conducted if wind shielding is placed adjacent to the exhaust plume to prevent bending, dispersion, or any other distortion of the exhaust plume as it passes through the optical unit.

(3) *Smokemeter, (light extinction meter)*. A continuously recording, full-flow light obscuration meter shall be used.

(i) It is positioned as specified in paragraph (c) of this section, so that a built-in light beam traverses the exhaust smoke plume which issues from the duct. The light beam shall be at right angles to the axis of the plume, and in those cases were the exhaust is not circular at its discharge, the path of the light beam through the plume shall be along the longest axis of the exhaust stack which is not a diagonal of a rectangular exhaust stack.

(ii) The light source shall be an incandescent lamp with a color temperature range of 2800K to 3250K, or a light source with a spectral peak between 550 and 570 nanometers.

(iii) The light output is collimated to a beam with a nominal diameter of 1.125 inches and an angle of divergence within a 6 degree included angle.

(iv) The light detector shall be a photocell or photodiode. If the light source is an incandescent lamp, the detector shall have a spectral response similar to the photopic curve of the human eye (a maximum response in the range of 550 to 570 nanometers, to less than four percent of that maximum response below 430 nanometers and above 680 nanometers).

(v) A collimating tube with apertures equal to the beam diameter is attached to the detector to restrict the viewing angle of the detector to within a 16 degree included angle.

(vi) An amplified signal corresponding to the amount of light blocked is recorded continuously on a remote recorder.

(vii) An air curtain across the light source and detector window assemblies may be used to minimize deposition of smoke particles on those surfaces provided that it does not measurably affect the opacity of the plume.

(viii) The smokemeter consists of two units; an optical unit and a remote control unit.

(ix) Light extinction meters employing substantially identical measurement principles and producing substantially equivalent results, but which employ other electronic and optical techniques may be used only after having been approved in advance by the Administrator.

(4) *Recorder*. A continuous recorder, with variable chart speed over a minimal range of 1 to 20 cm per minute (or equivalent) and an automatic marker indicating 1-second intervals, continuously records the exhaust gas opacity and throttle position.

(i) The recorder is equipped to indicate each of the throttle notch (test mode) positions.

(ii) The recorder scale for opacity is linear and calibrated to read from 0 to 100 percent opacity full scale.

(iii) The opacity trace has a resolution within one percent opacity.

(iv) The throttle position trace clearly indicates each throttle position.

(5) The recorder used with the smokemeter shall be capable of full-scale deflection in 0.5 second or less. The smokemeter-recorder combination may be damped so that signals with a frequency higher than 10 cycles per second are attenuated. A separate low-pass electronic filter with the following performance characteristics may be installed between the smokemeter and the recorder to achieve the high-frequency attenuation:

(i) Three decibel point: 10 cycles per second.

(ii) Insertion loss: 0 ±0.5 decibel.

(iii) Selectivity: 12 decibels down at 40 cycles per second minimum.

(iv) Attenuation: 27 decibels down at 40 cycles per second minimum.

(6) Automatic data collection equipment may be used, provided it is capable of collecting data equivalent to or

better than the data required by paragraphs (b)(4) and (5) of this section.

(c)(1) *Assembling equipment for locomotive testing*. The optical unit of the smokemeter shall be mounted radially to the exhaust duct so that the measurement will be made at right angles to the axis of the exhaust plume. The distance from the optical centerline to the exhaust outlet shall be minimized; in all cases it shall be less than 10 feet. The maximum allowable distance of unducted space upstream of the optical centerline is 18 inches. The full flow of the exhaust stream shall be centered between the source and detector apertures (or windows and lenses) and on the axis of the light beam.

(2) *Assembling equipment for engine testing*. The optical unit of the smokemeter shall be mounted radially to the exhaust duct so that the measurement will be made at right angles to the axis of the exhaust plume. The distance from the optical centerline to the exhaust outlet shall be less than 25 feet. The maximum allowable distance of unducted space upstream of the optical centerline is 18 inches. In-line smokemeters are allowed. The full flow of the exhaust stream shall be centered between the source and detector apertures (or windows and lenses) and on the axis of the light beam.

(d) *Power supply*. Power shall be supplied to the control unit of the smokemeter in time to allow at least 15 minutes for stabilization prior to testing.

§ 92.112 Analytical gases.

(a) Gases for the CO and CO_2 analyzers shall be single blends of CO and CO_2, respectively, using zero grade nitrogen as the diluent.

(b) Gases for the hydrocarbon analyzer shall be single blends of propane using zero grade air as the diluent.

(c) Gases for the methane analyzer shall be single blends of methane using air as the diluent.

(d) Gases for the NO_X analyzer shall be single blends of NO named as NO_X with a maximum NO_2 concentration of 5 percent of the nominal value using zero grade nitrogen as the diluent.

(e) Fuel for the HFID (or FID, as applicable) and the methane analyzer shall be a blend of 40±2 percent hydrogen with the balance being helium. The mixture shall contain less than 1 ppm equivalent carbon response; 98 to 100 percent hydrogen fuel may be used with advance approval of the Administrator.

(f) *Hydrocarbon analyzer burner air*. The concentration of oxygen must be within 1 mole percent of the oxygen concentration of the burner air used in the latest oxygen interference check ($\%O_2I$). If the difference in oxygen concentration is greater than 1 mole percent, then the oxygen interference must be checked and the analyzer adjusted if necessary, to meet the $\%O_2I$ requirements. The burner air must contain less than 2 ppmC hydrocarbon.

(g) The allowable zero gas (air or nitrogen) impurity concentrations shall not exceed 1 ppm equivalent carbon response, 1 ppm carbon monoxide, 0.04 percent (400 ppm) carbon dioxide and 0.1 ppm nitric oxide.

(h)(1) ''Zero-grade air'' includes artificial ''air'' consisting of a blend of nitrogen and oxygen with oxygen concentrations between 18 and 21 mole percent.

(2) Calibration gases shall be accurate to within ±1 percent of NIST gas standards, or other gas standards which have been approved by the Administrator.

(3) Span gases shall be accurate to within ±2 percent of NIST gas standards, or other gas standards which have been approved by the Administrator.

(i) Oxygen interference check gases shall contain propane at a concentration greater than 50 percent of range. The concentration value shall be determined to calibration gas tolerances by chromatographic analysis of total hydrocarbons plus impurities or by dynamic blending. Nitrogen shall be the predominant diluent with the balance being oxygen. Oxygen concentration in the diluent shall be between 20 and 22 percent.

(j) The use of precision blending devices (gas dividers) to obtain the required calibration gas concentrations is acceptable, provided that the blended gases are accurate to within ±1.5 percent of NIST gas standards, or other gas standards which have been approved by the Administrator. This accuracy implies that primary gases used

for blending must be ''named'' to an accuracy of at least ±1 percent, traceable to NIST or other approved gas standards.

§ 92.113 Fuel specifications.

(a) *Diesel test fuel.* (1) The diesel fuels for testing locomotives or locomotive engines designed to operate on diesel fuel shall be clean and bright, with pour and cloud points adequate for operability. The diesel fuel may contain nonmetallic additives as follows: cetane improver, metal deactivator, antioxidant, dehazer, antirust, pour depressant, dye, dispersant, and biocide. The diesel fuel shall also meet the specifications (as determined using methods incorporated by reference at § 92.5) in Table B113–1 of this section, or substantially equivalent specifications approved by the Administrator, as follows:

TABLE B113–1

Item	ASTM	Type 2–D
Cetane Number	D613	40–48
Cetane Index	D976	40–48
Distillation range:		
IBP,		
°F	D86	340–400
(°C)		(171.1–204.4)
10 pct. point,		
°F	D86	400–460
(°C)		(204.4–237.8)
50 pct. point,		
°F	D86	470–540
(°C)		(243.3–282.2)
90 pct. point,		
°F	D86	560–630
(°C)		(293.3–332.2)
EP,		
°F	D86	610–690
(°C)		(321.1–365.6)
Gravity, °API	D287	32–37
Total sulfur, pct	D2622	0.2–0.4
Hydrocarbon composition, pct:		
Aromatics,	D5186	[1] 27
Paraffins, Naphthenes, Olefins.	D1319	([2])
Flashpoint, min.,		
°F	D93	130
°C		(54.4)
Viscosity, centistokes	D445	2.0–3.2

[1] Minimum. [2] Remainder.

(2) Other diesel fuels may be used for testing provided:

(i) They are commercially available; and

(ii) Information, acceptable to the Administrator, is provided to show that only the designated fuel would be used in service; and

(iii) Use of a fuel listed under paragraph (a)(1) of this section would have a detrimental effect on emissions or durability; and

(iv) Written approval from the Administrator of the fuel specifications is provided prior to the start of testing.

(3) The specification of the fuel to be used under paragraphs (a)(1), and (a)(2) of this section shall be reported in accordance with § 92.133.

(b) *Natural gas test fuel (compressed natural gas, liquefied natural gas).* (1) Natural gas-fuel meeting the specifications (as determined using methods incorporated by reference at § 92.5) in Table B113–2 of this section, or substantially similar specifications approved by the Administrator, shall be used in exhaust emissions testing of locomotives or locomotive engines designed to operate on natural gas-fuel, as follows:

TABLE B113–2

Item	Mole pct.	ASTM test method No.	Value
Methane	Min.	D1945	89.0
Ethane	Max.	D1945	4.5
C_3 and higher	Max.	D1945	2.3
C_6 and higher	Max.	D1945	0.2
Oxygen	Max.	D1945	0.6
Inert gases: Sum of CO_2 and N_2—Odorant [1].	Max.	D1945	4.0

[1] The natural gas at ambient conditions must have a distinctive odor potent enough for its presence to be detected down to a concentration in air of not over 1/5 (one-fifth) of the lower limit of flammability.

(2) Other natural gas-fuels may be used for testing provided:

(i) They are commercially available; and

(ii) Information, acceptable to the Administrator, is provided to show that only the designated fuel would be used in customer service; and

(iii) Written approval from the Administrator of the fuel specifications is provided prior to the start of testing.

(3) The specification of the fuel to be used under paragraph (b)(1) or (b)(2) of this section shall be reported in accordance with § 92.133.

(c) *Other fuel types.* (1) For locomotives or locomotive engines which are designed to be capable of using a type of fuel (or mixed fuel) other than diesel fuel, or natural gas fuel (e.g., methanol), and which are expected to use that type of fuel (or mixed fuel) in

service, a commercially available fuel of that type shall be used for exhaust emission testing. The Administrator shall determine the specifications of the fuel to be used for testing, based on the engine design, the specifications of commercially available fuels, and the recommendation of the manufacturer.

(2) The specification of the fuel to be used under paragraph (c)(1) of this section shall be reported in accordance with § 92.133.

§ 92.114 Exhaust gas and particulate sampling and analytical system.

(a) *General*. (1) During emission testing, the engine exhaust is routed through an exhaust duct connected to, or otherwise adjacent to the outlet of the locomotive exhaust system. Emission samples are collected as specified in paragraphs (b) and (c) of this section. Exhaust duct requirements are specified in paragraph (d) of this section.

(2) The systems described in this section are appropriate for use with locomotives or engines employing a single exhaust.

(i) For testing where the locomotive or engine has multiple exhausts all exhaust streams shall be combined into a single stream prior to sampling, except as allowed by paragraph (a)(2)(ii) of this section.

(ii) For locomotive testing where the locomotive has multiple exhaust stacks, proportional samples may be collected from each exhaust outlet instead of ducting the exhaust stacks together, provided that the CO_2 concentrations in each exhaust stream are shown (either prior to testing or during testing) to be within 5 percent of each other at notch 8.

(3) All vents, including analyzer vents, bypass flow, and pressure relief vents of regulators, should be vented in such a manner to avoid endangering personnel in the immediate area.

(4) Additional components, not specified here, such as instruments, valves, solenoids, pumps, switches, and so forth, may be employed to provide additional information and coordinate the functions of the component systems, provided that their use is consistent with good engineering practice. Any variation from the specifications in this subpart including performance specifications and emission detection methods may be used only with prior approval by the Administrator.

(b) *Raw exhaust sampling for gaseous emissions*. (1)(i) An example of the type of sampling and analytical system which is to be used for gaseous emissions testing under this subpart is shown in Figure B114–1 of this section. All components or parts of components that are wetted by the sample or corrosive calibration gases shall be either chemically cleaned stainless steel or other inert material, for example, polytetrafluoroethylene resin. The use of ''gauge savers'' or ''protectors'' with nonreactive diaphragms to reduce dead volumes is permitted. Additional components such as instruments, valves, solenoids, pumps, switches, etc. may be employed to provide additional information and coordinate the functions of the component systems.

(ii) *System components list*. The following is a list of components shown in Figure B114–1 of this section by numeric identifier.

(A) *Filters*. Glass fiber filter paper is permitted for the fine particulate filters (F1, F2, and F3). Optional filter F4 is a coarse filter for large particulates. Filters F3 and F4 are heated filters

(B) *Flowmeters*. Flowmeters FL1 and FL2 indicate sample flow rates through the CO and CO_2 analyzers. Flowmeters FL3, FL4, FL5, and FL6 indicate bypass flow rates.

(C) *Gauges*. Downstream gauges are required for any system used for testing under this subpart. Upstream gauges may be required under this subpart. Upstream gauges G1 and G2 measure the input to the CO and CO_2 analyzers. Downstream gauges G3 and G4 measure the exit pressure of the CO and CO_2 analyzers. If the normal operating range of the downstream gauges is less than 3 inches of water, then the downstream gauges must be capable of reading both pressure and vacuum. Gauges G3 and G4 are not necessary if the analyzers are vented directly to atmospheric pressure.

(D) *Pressure gauges*. P1 is a bypass pressure gauge; P2, P3, P4, and P5 are for sample or span pressure at inlet to flow control valves.

(E) *Water traps*. Water traps WT1 and WT2 to remove water from the sample. A water trap performing the function of WT1 is required for any system used for testing under this subpart. Chemical dryers are not an acceptable method of removing the water. Water removal by condensation is acceptable. If water is removed by condensation, the sample gas temperature or sample dew point must be monitored either within the water trap or downstream; it may not exceed 45 °F (7 °C). Means other than condensation may be used only with prior approval from the Administrator.

(F) *Regulators*. R1, R3, R4, and R6 are line pressure regulators to control span pressure at inlet to flow control valves; R2 and R5 are back pressure regulators to control sample pressure at inlet to flow control valves.

(G) *Valves*. V1, V7, V8, and V14 are selector valves to select zero or calibration gases; V2 are optional heated selector valves to purge the sample probe, perform leak checks, or to perform hang-up checks; V3 and V5 are selector valves to select sample or span gases; V4, V6, and V15 are flow control valves; V9 and V13—heated selector valve to select sample or span gases; V10 and V12—heated flow control valves; V11—Selector valve to select NO_X or bypass mode in the chemiluminescence analyzer; V16—heated selector valve to perform leak checks.

(H) *Pump*. Sample transfer pump to transport sample to analyzers.

(I) *Temperature sensor*. A temperature sensor (T1) to measure the NO_2 to NO converter temperature is required for any system used for testing under this subpart.

(J) *Dryer*. Dryers D1 and D2 to remove the water from the bypass flows to prevent condensation in flowmeters FL3, FL4, and FL6.

(2) The following requirements must be incorporated in each gaseous sampling system used for testing under this subpart:

(i) The exhaust is analyzed for gaseous emissions using analyzers meeting the specifications of § 92.109, and all analyzers must obtain the sample to be analyzed from the same sample probe, and internally split to the different analyzers.

(ii) Sample transfer lines must be heated as specified in paragraph (b)(4) of this section.

(iii) Carbon monoxide and carbon dioxide measurements must be made on a dry basis. Specific requirements for the means of drying the sample can be found in paragraph (b)(1)(ii)(E) of this section.

(iv) All NDIR analyzers must have a pressure gauge immediately downstream of the analyzer. The gauge tap must be within 2 inches of the analyzer exit port. Gauge specifications can be found in paragraph (b)(1)(ii)(C) of this section.

(v) All bypass and analyzer flows exiting the analysis system must be measured. Capillary flows such as in HFID and CL analyzers are excluded. For each NDIR analyzer with a flow meter located upstream of the analyzer, an upstream pressure gauge must be used. The gauge tap must be within 2 inches of the analyzer entrance port.

(vi) Calibration or span gases for the NO_X measurement system must pass through the NO_2 to NO converter.

(vii) The temperature of the NO_2 to NO converter must be displayed continuously.

(3) *Gaseous sample probe*. (i) The gaseous emissions sample probe shall be a straight, closed end, stainless steel, multi-hole probe. The inside diameter shall not be greater than the inside diameter of the sample line by more than 0.01 inches (0.03 cm). The wall thickness of the probe shall not be greater than 0.04 inches (0.10 cm). The fitting that attaches the probe to the exhaust duct shall be as small as practical in order to minimize heat loss from the probe.

(ii) The gaseous emissions sample probe shall have a minimum of three holes in each 3 inch segment of length of the probe. The spacing of the radial planes for each hole in the probe must be such that they cover approximately equal cross-sectional areas of the exhaust duct. The angular spacing of the holes must be approximately equal. The angular spacing of any two holes in one plane may not be 180 °±20° (see section view C-C of Figure B114–2 of

this section). The holes should be sized such that each has approximately the same flow. If only three holes are used in each 3 inch segment of probe length, they may not all be in the same radial plane.

(iii) The sample probe shall be so located in the center of the exhaust duct to minimize stratification, with respect to both concentration and velocity, present in the exhaust stream. The probe shall be located between two feet and five feet downstream of the locomotive exhaust outlet (or nearest practical equivalent during engine testing), and at least 1 foot upstream of the outlet of the exhaust duct to the atmosphere.

(iv) If the exhaust duct is circular in cross section, the sample probe should extend approximately radially across the exhaust duct, and approximately through the center of the duct. The sample probe must extend across at least 80 percent of the diameter of the duct.

(v) If the exhaust duct is not circular in cross section, the sample probe should extend across the exhaust duct approximately parallel to the longest sides of the duct, or along the longest axis of the duct which is not a diagonal, and through the approximate center of the duct. The sample probe must extend across at least 80 percent of the longest axis of the duct which is not a diagonal, and be approximately parallel to the longest sides of the duct.

(vi) Other sample probe designs and/or locations may be used only if demonstrated (to the Administrator's satisfaction) to provides a more representative sample.

(4) *Sample transfer line(s)*. (i) The maximum inside diameter of the gaseous emissions sample line shall not exceed 0.52 inches (1.32 cm).

(ii) If valve V2 is used, the sample probe must connect directly to valve V2. The location of optional valve V2 may not be greater than 4 feet (1.22 m) from the exhaust duct.

(iii) The sample transport system from the engine exhaust duct to the HC analyzer and the NO_X analyzer must be heated as is indicated in Figure B114–1 of this section.

(A) For diesel fueled and biodiesel fueled locomotives and engines, the wall temperature of the HC sample line must be maintained at 375 ±20 °F (191 ±11 °C). An exception is made for the first 4 feet (122 cm) of sample line from the exhaust duct. The upper temperature tolerance for this 4 foot section is waived and only the minimum temperature specification applies.

(B) For locomotives and engines using fuels other than diesel or biodiesel, the heated components in the HC sample path shall be maintained at a temperature approved by the Administrator, not exceeding 446 °F (230 °C).

(C) For all fuels, wall temperature of the NO_X sample line must be maintained between 140 °F (60 °C) and 446 °F (230 °C). An exception is made for the first 4 feet (122 cm) of sample line from the exhaust duct. The upper temperature tolerance for this 4 foot section is waived and only the minimum temperature specification applies.

(D) For each component (pump, sample line section, filters, etc.) in the heated portion of the sampling system that has a separate source of power or heating element, use engineering judgment to locate the coolest portion of that component and monitor the temperature at that location. If several components are within an oven, then only the surface temperature of the component with the largest thermal mass and the oven temperature need be measured.

(c) *Particulate emissions*. (1)(i) Schematic drawing. An example of a sampling system which may be used for particulate emissions testing under this subpart is shown in Figure B114–3 of this section. All components or parts of components that are wetted by the samples gases upstream of the filter shall be either chemically cleaned stainless steel or other inert material, for example, polytetrafluoroethylene resin. The use of ''gauge savers'' or ''protectors'' with nonreactive diaphragms to reduce dead volumes is permitted. Additional components such as instruments, valves, solenoids, pumps, switches, etc. may be employed to provide additional information and coordinate the functions of the component systems.

(ii) The following requirements must be incorporated in each system used for testing under this subpart:

(A) All particulate filters must obtain the sample from the same sample probe located within the exhaust gas extension with internal split to the different filters.

(B) The wall temperature of the sample transport system from the probe to the dilution tunnel (excluding the first 4 feet of the particulate transfer tube) must be maintained at 375 °F to 395 °F (191 °C to 202 °C).

(2) *Particulate raw sample probe.* (i) The sample probe for the raw exhaust shall be a straight, closed end, stainless steel, multi-hole probe of approximately 1.25 inch (3.2 cm) diameter. The inside diameter shall not be greater than the inside diameter of the sample line by more than 0.1 inches (0.3 cm). The wall thickness of the probe shall not be greater than 0.06 inches (0.15 cm). The fitting that attaches the probe to the exhaust duct shall be as small as practical in order to minimize heat loss from the probe.

(ii) All sample collection holes in the probe shall be located so as to face away from the direction of flow of the exhaust stream or at most be tangential to the flow of the exhaust stream past the probe (see Figure B114–4 of this section). Five holes shall be located in each radial plane along the length of the probe in which sample holes are placed. The spacing of the radial planes for each set of holes in the probe must be such that they cover approximately equal cross-sectional areas of the exhaust duct. For rectangular ducts, this means that the sample hole-planes must be equidistant from each other. For circular ducts, this means that the distance between the sample hole-planes must be decreased with increasing distance from the center of the duct (see Figure B114–4 of this section).

(NOTE: Particulate concentrations are expected to vary to some extent as a function of the distance to the duct wall; thus each set of sample holes collects a sample that is representative of a cross-sectional disk at that approximate distance from the wall.)

The spacing between sets of sample holes along the length of the probe shall be no more than 4 inches (10 cm). The holes should be sized such that each has approximately the same flow.

(iii)(A) The particulate sample probe shall be located in the exhaust duct on an axis which is directly downstream of, and parallel to the axis of the gaseous sample probe. The distance between the probes shall be between 3 inches (7.6 cm) and 6 inches (15.2 cm). Greater spacing is allowed for engine testing, where spacing of 3 inches (7.6 cm) to 6 inches (15.2 cm) is not practical.

(B) If the exhaust duct is circular in cross section, the sample probe should extend approximately radially across the exhaust duct, and approximately through the center of the duct. The sample probe must extend across at least 80 percent of the diameter of the duct.

(C) If the exhaust duct is not circular in cross section, the sample probe should extend across the exhaust duct approximately parallel to the longest sides of the duct, or along the longest axis of the duct which is not a diagonal, and through the approximate center of the duct. The sample probe must extend across at least 80 percent of the longest axis of the duct which is not a diagonal, and be approximately parallel to the longest sides of the duct.

(3) *Particulate sample transfer line.* (i) The maximum inside diameter of the particulate emissions sample line shall be approximately 2.5 inches (6.4 cm).

(ii) The sample transfer line shall be heated to maintain a wall temperature above 375 °F.

(4) *Dilution tunnel.* The flow capacity of the blower moving the mixture of sample and air through the tunnel must be sufficient to maintain the diluted sample stream at a temperature of 125 °F (51.7 °C) or less, at the sampling zone in the dilution tunnel and at the sample filter. A single measurement of diluted exhaust temperature is required. The temperature shall also be maintained as required to prevent condensation at any point in the dilution tunnel. A small negative pressure is to be maintained in the dilution tunnel by throttling at the source of the dilution air, and adjusted as necessary, sufficient to draw sample through the probe and sample transfer line. Direct sampling of the particulate material may take place (Figure B114–3 of this section) at this point.

(i)(A) The dilution tunnel shall be:

(*1*) Small enough in diameter to cause turbulent flow (Reynolds Number greater than 4000) and of sufficient length to cause complete mixing of the exhaust and dilution air;

(*2*) 4 inches (10 cm) minimum inside diameter;

(*3*) Constructed of electrically conductive material which does not react with the exhaust components; and

(*4*) Electrically grounded.

(B) The temperature of the diluted exhaust stream inside of the dilution tunnel shall be sufficient to prevent water condensation.

(C) The engine exhaust shall be directed downstream at the point where it is introduced into the dilution tunnel.

(ii) Dilution air:

(A) Shall be at a temperature of 68 °F (20 °C) or greater.

(B) May be filtered at the dilution air inlet.

(C) May be sampled to determine background particulate levels, which can then be subtracted from the values measured in the exhaust stream.

(D) Shall be sampled to determine the background concentration of CO_2.

(iii) Dilute sample probe and collection system.

(A) The particulate sample probe in the dilution tunnel shall be:

(*1*) Installed facing upstream at a point where the dilution air and exhaust are well mixed (i.e., on the tunnel centerline, approximately 10 tunnel diameters downstream of the point where the exhaust enters the dilution tunnel).

(*2*) Sufficiently distant (radially) from other sampling probes so as to be free from the influence of wakes or eddies produced by the other probes.

(*3*) 0.5 in. (1.3 cm) minimum inside diameter.

(*4*) The distance from the sampling tip to the filter holder shall not be more than 40 inches (102 cm).

(*5*) Designed to minimize the deposition of particulate during transfer (i.e., bends should be as gradual as possible, protrusions (due to sensors, etc.) should be smooth and not sudden, etc.).

(B) The gas meters or flow instrumentation shall be located sufficiently distant from the tunnel so that the inlet gas temperature remains constant (±5 °F (±2.8 °C)). Alternately, the temperature of the sample may be monitored at the gas meter, and the measured volume corrected to standard conditions.

(C) *Particulate sampling filters.* (*1*) Fluorocarbon-coated glass fiber filters or fluorocarbon-based (membrane) filters are required.

(*2*) Particulate filters must have a diameter to maintain the average face velocity of the sample across the filter between 35 and 80 cm/s.

(*3*) The dilute exhaust will be simultaneously sampled by a pair of filters (one primary and one back-up filter) during each phase of the test. The back-up filter shall be located no more than 4 inches (10 cm) downstream of the primary filter. The primary and back-up filters shall not be in contact with each other.

(*4*) The recommended target loading on a primary 70-mm filter (60 mm diameter stain area) is 1.3 milligrams. Equivalent loadings (0.5 mg/1075 mm^2 stain area) shall be used as target loadings when other filter sizes are used.

(D) *Diluted CO_2 sample collection system.* (*1*) The concentrations of CO_2 in the dilution air and diluted exhaust are determined by pumping a sample into a sample bag (made of a nonreactive material) or directly to the analyzer, as shown in Figure B114–3 of this section.

(*2*) The sample probe for the diluted exhaust shall be installed facing upstream at a point where the dilution air and exhaust are well mixed (i.e., on the tunnel centerline, approximately 10 tunnel diameters downstream of the point where the exhaust enters the dilution tunnel). It shall also be sufficiently distant (radially) from other sampling probes so as to be free from the influence of any wakes or eddies produced by the other probes.

(iv) Other sample flow handling and/or measurement systems may be used if shown to yield equivalent results and if approved in advance by the Administrator. (See Appendix IV of this part for guidance.)

(d) *Exhaust system.* The exhaust system shall meet the following requirements:

(1) For locomotive testing, the engine exhaust shall be routed through an exhaust duct with dimensions equal to or slightly larger than the dimensions of the locomotive exhaust outlet. The exhaust duct shall be designed so as to not significantly affect exhaust backpressure.

(2) For engine testing, either a locomotive-type or a facility-type exhaust system (or a combination system) may be used. The exhaust backpressure for engine testing shall be set between 90 and 100 percent of the maximum backpressure that will result with the exhaust systems of the locomotives in which the engine will be used. Backpressure less than 90 percent of the maximum value is also allowed, provided the backpressure is within 0.07 psi of the maximum value. The facility-type exhaust system shall meet the following requirements:

(i) It must be composed of smooth ducting made of typical in-use steel or stainless steel.

(ii) If an aftertreatment system is employed, the distance from the exhaust manifold flange(s), or turbocharger outlet to any exhaust aftertreatment device shall be the same as in the locomotive configuration unless the manufacturer is able to demonstrate equivalent performance at another location.

(iii) If the exhaust system ducting from the exit of the engine exhaust manifold or turbocharger outlet to smoke meter exceeds 12 feet (3.7 m) in length, then all ducting shall be insulated consistent with good engineering practice.

(iv) For engines designed for more than one exhaust outlet to the atmosphere, a specially fabricated collection duct may be used. The collection duct should be located downstream of the in-locomotive exits to the atmosphere. Any potential increase in backpressure due to the use of a single exhaust instead of multiple exhausts may be compensated for by using larger than standard exhaust system components in the construction of the collection duct.

(e) *Dilute exhaust sampling for gaseous and particulate emissions.* (1) Dilution of the exhaust prior to sampling is allowed for gaseous emissions. The equipment and methods used for dilution, sampling and analysis shall comply with the requirements of 40 CFR part 1065, with the following exceptions and additional requirements:

(i) Proportional sampling and heat exchangers are not required;

(ii) Larger minimum dimensions for the dilution tunnel(s) shall be specified by the Administrator;

(iii) Other modifications may be made with written approval from the Administrator.

(2) Dilution of only a portion of the exhaust is allowed, provided that:

(i) The fraction of the total exhaust that is diluted is determined for systems that determine mass emission rates (g/hr) from the total volume of the diluted sample; or

(ii) The ratio of raw sample volume to diluted sample volume is determined for systems that determine mass emission rates (g/hr) from measured fuel flow rates.

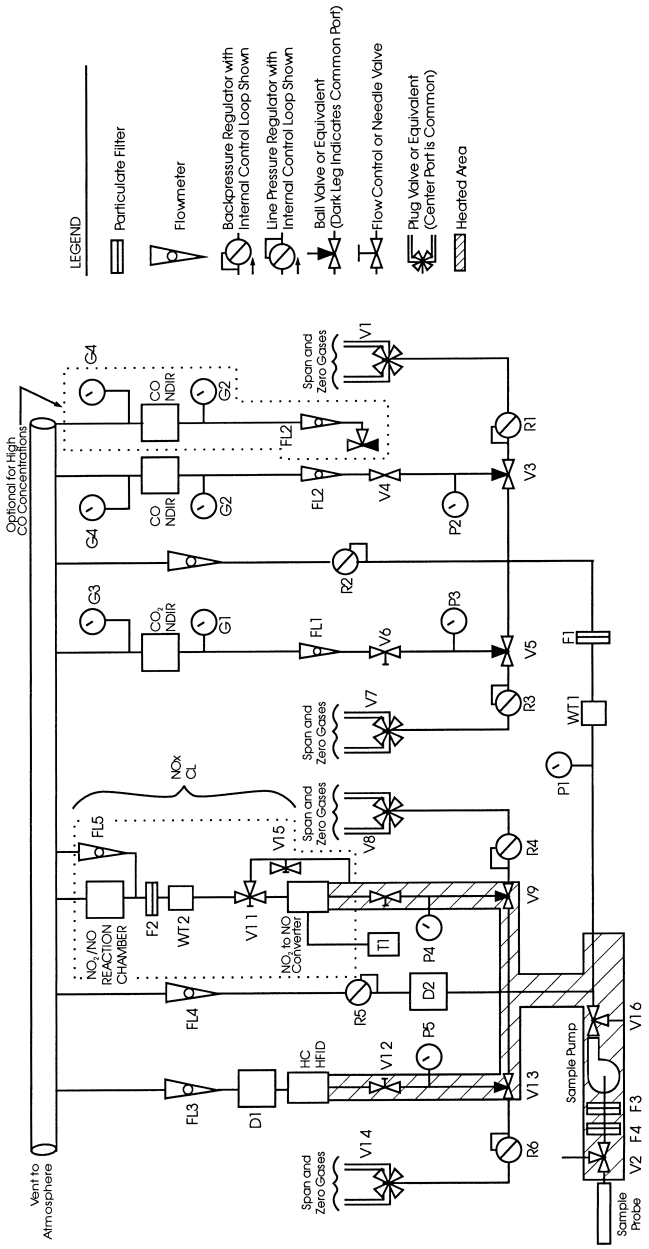

Figure B114-1. -- Exhaust Gas Sampling and Analytical Train

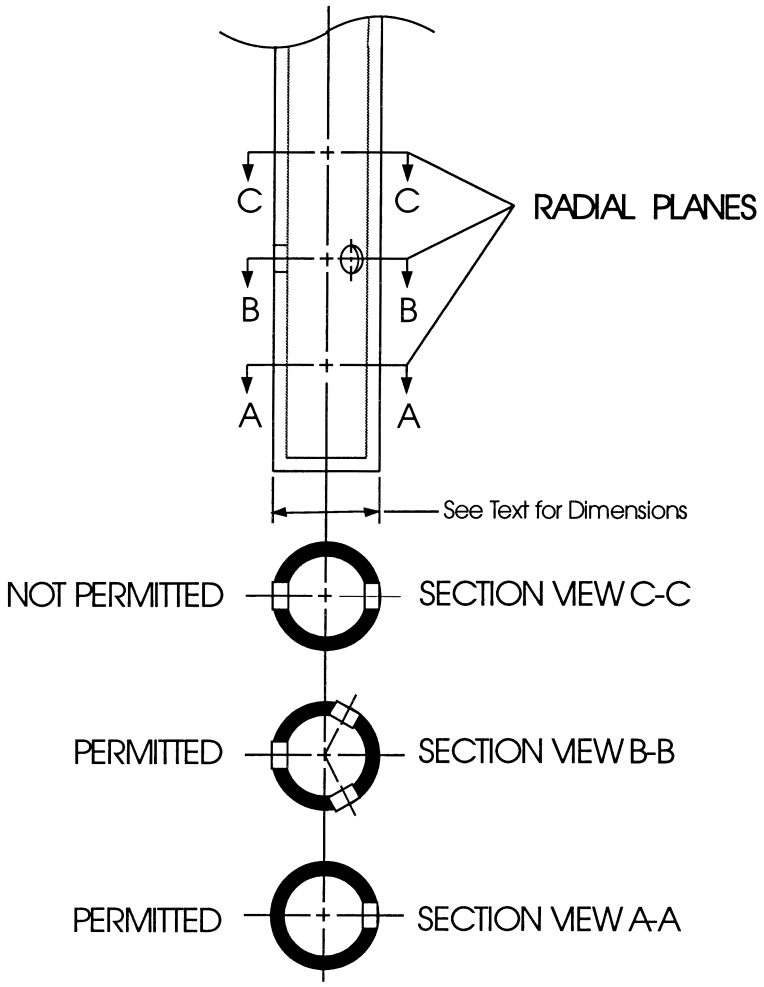

Figure B114-2 SAMPLE PROBE AND TYPICAL HOLE SPACING

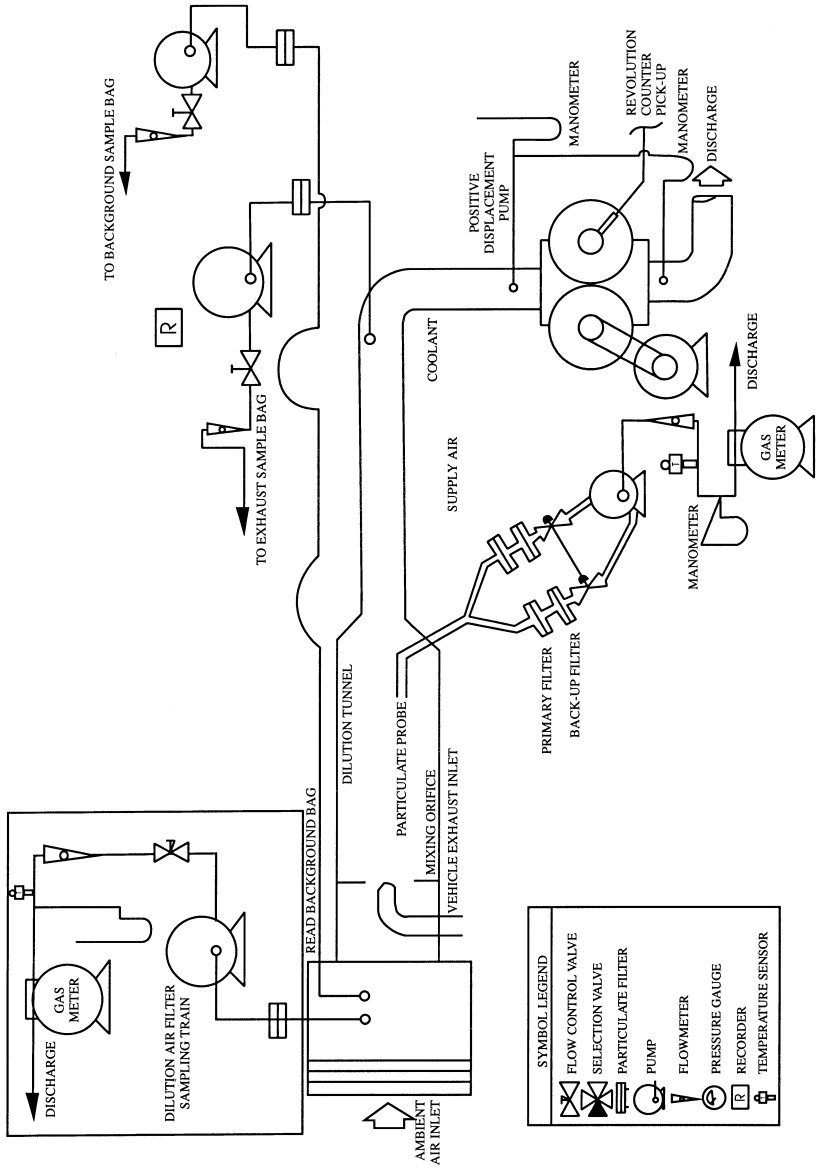

Figure B114-3 PARTICULATE EMISSIONS SAMPLING SYSTEM

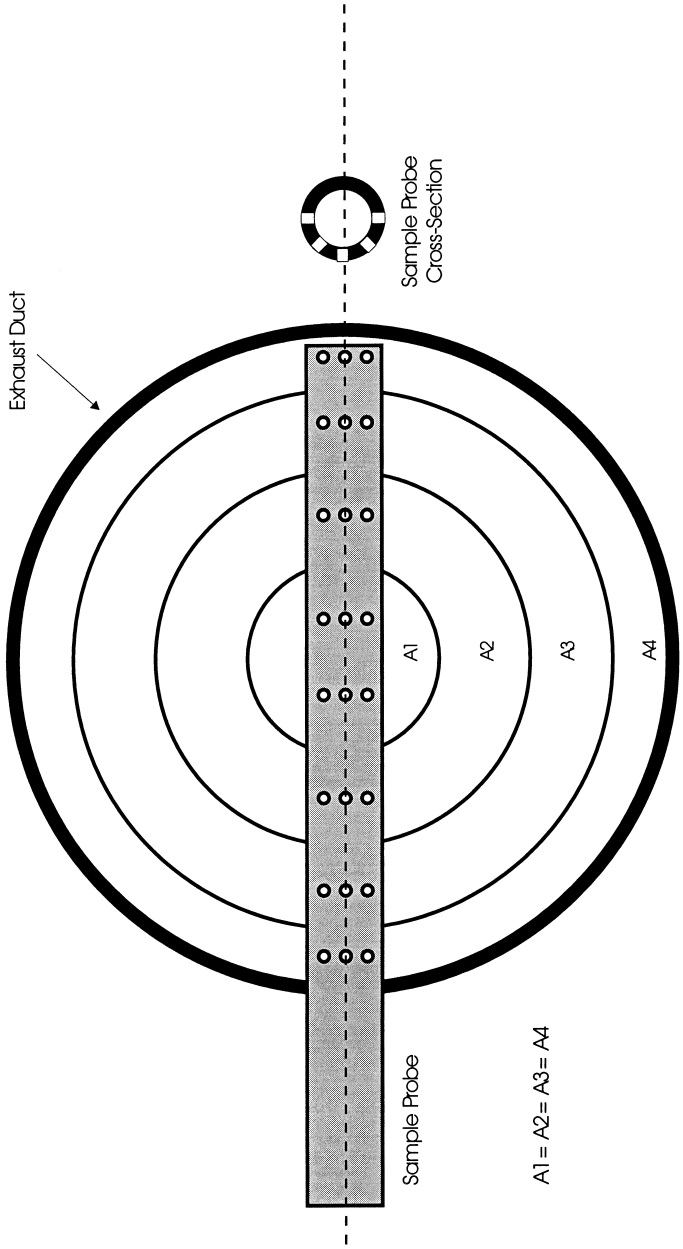

Figure B114-4 Particulate Sample Probe Design

[63 FR 18998, Apr. 16, 1998, as amended at 70 FR 40454, July 13, 2005]

§ 92.115 Calibrations; frequency and overview.

(a) Calibrations shall be performed as specified in §§ 92.116 through 92.122.

(b) At least monthly or after any maintenance which could alter calibration, perform the periodic calibrations required by § 92.118(a)(2) (certain analyzers may require more frequent calibration depending on the equipment and use). Exception: the water rejection ratio and the CO_2 rejection ratio on all NDIR analyzers is only required to be performed quarterly.

(c) At least monthly or after any maintenance which could alter calibration, calibrate the engine dynamometer flywheel torque and speed measurement transducers, as specified in § 92.116.

(d) At least monthly or after any maintenance which could alter calibration, check the oxides of nitrogen converter efficiency, as specified in § 92.121.

(e) At least weekly or after any maintenance which could alter calibration, check the dynamometer (if used) shaft torque feedback signal at steady-state conditions by comparing:

(1) Shaft torque feedback to dynamometer beam load; or

(2) By comparing in-line torque to armature current; or

(3) By checking the in-line torque meter with a dead weight per § 92.116(b)(1).

(f) At least quarterly or after any maintenance which could alter calibration, calibrate the fuel flow measurement system as specified in § 92.107.

(g) At least annually or after any maintenance which could alter calibration, calibrate the electrical output measurement system for the electrical load bank used for locomotive testing.

(h) Sample conditioning columns, if used in the CO analyzer train, should be checked at a frequency consistent with observed column life or when the indicator of the column packing begins to show deterioration.

(i) For equipment not addressed in §§ 92.116 through 92.122 calibrations shall be performed at least as often as required by the equipment manufacturer or as necessary according to good practices. The calibrations shall be performed in accordance with procedures specified by the equipment manufacturer.

(j) Where testing is conducted intermittently, calibrations are not required during period in which no testing is conducted, provided that times between the most recent calibrations and the date of any test does not exceed the calibration period. For example, if it has been more than one month since the analyzers have been calibrated (as specified in paragraph (c) of this section) then they must be calibrated prior to the start of testing.

§ 92.116 Engine output measurement system calibrations.

(a) *General requirements for dynamometer calibration.* (1) The engine flywheel torque and engine speed measurement transducers shall be calibrated with the calibration equipment described in this section.

(2) The engine flywheel torque feedback signals to the cycle verification equipment shall be electronically checked before each test, and adjusted as necessary.

(3) Other engine dynamometer system calibrations shall be performed as dictated by good engineering practice.

(4) When calibrating the engine flywheel torque transducer, any lever arm used to convert a weight or a force through a distance into a torque shall be used in a horizontal position (±5 degrees).

(5) Calibrated resistors may not be used for engine flywheel torque transducer calibration, but may be used to span the transducer prior to engine testing.

(b) *Dynamometer calibration equipment*—(1) *Torque calibration equipment.* Two techniques are allowed for torque calibration. Alternate techniques may be used if shown to yield equivalent accuracies. The NIST ''true'' value torque is defined as the torque calculated by taking the product of an NIST traceable weight or force and a sufficiently accurate horizontal lever arm distance, corrected for the hanging torque of the lever arm.

(i) The lever-arm dead-weight technique involves the placement of known weights at a known horizontal distance from the center of rotation of the

torque measuring device. The equipment required is:

(A) *Calibration weights.* A minimum of six calibration weights for each range of torque measuring device used are required. The weights must be approximately equally spaced and each must be traceable to NIST weights within 0.1 percent. Laboratories located in foreign countries may certify calibration weights to local government bureau standards. Certification of weight by state government Bureau of Weights and Measures is acceptable. Effects of changes in gravitational constant at the test site may be accounted for if desired.

(B) *Lever arm.* A lever arm with a minimum length of 24 inches is required. The horizontal distance from the centerline of the engine torque measurement device to the point of weight application shall be accurate to within ±0.10 inches. The arm must be balanced, or the hanging torque of the arm must be known to within ±0.1 ft-lbs.

(ii) The transfer technique involves the calibration of a master load cell (i.e., dynamometer case load cell). This calibration can be done with known calibration weights at known horizontal distances, or by using a hydraulically actuated precalibrated master load cell. This calibration is then transferred to the flywheel torque measuring device. The technique involves the following steps:

(A) A master load cell shall be either precalibrated or be calibrated per paragraph (b)(1)(i)(A) of this section with known weights traceable to NIST within 0.1 percent, and used with the lever arm(s) specified in this section. The dynamometer should be either running or vibrated during this calibration to minimize static hysteresis.

(B) Transfer of calibration from the case or master load cell to the flywheel torque measuring device shall be performed with the dynamometer operating at a constant speed. The flywheel torque measurement device readout shall be calibrated to the master load cell torque readout at a minimum of six loads approximately equally spaced across the full useful ranges of both measurement devices. (Note that good engineering practice requires that both devices have approximately equal useful ranges of torque measurement.) The transfer calibration shall be performed in a manner such that the accuracy requirements of § 92.106(b)(1)(ii) for the flywheel torque measurement device readout be met or exceeded.

(iii) Other techniques may be used if shown to yield equivalent accuracy.

(2) *Speed calibration equipment.* A 60 (or greater) tooth wheel in combination with a common mode rejection frequency counter is considered an absolute standard for engine or dynamometer speed.

(c) *Dynamometer calibration.* (1) If necessary, follow the manufacturer's instructions for initial start-up and basic operating adjustments.

(2) Check the dynamometer torque measurement for each range used by the following:

(i) Warm up the dynamometer following the equipment manufacturer's specifications.

(ii) Determine the dynamometer calibration moment arm. Equipment manufacturer's data, actual measurement, or the value recorded from the previous calibration used for this subpart may be used.

(iii) Calculate the indicated torque (IT) for each calibration weight to be used by:

IT=calibration weight (lb)×calibration moment arm (ft)

(iv) Attach each calibration weight specified in paragraph (b)(1)(i)(A) of this section to the moment arm at the calibration distance determined in paragraph (b)(2)(ii)(B) of this section. Record the power measurement equipment response (ft-lb) to each weight.

(v) For each calibration weight, compare the torque value measured in paragraph (b)(2)(iv) of this section to the calculated torque determined in paragraph (b)(2)(iii) of this section.

(vi) The measured torque must be within 2 percent of the calculated torque.

(vii) If the measured torque is not within 2 percent of the calculated torque, adjust or repair the system. Repeat the steps in paragraphs (b)(2)(i) through (b)(2)(vi) of this section with the adjusted or repaired system.

(3) *Option.* A master load-cell or transfer standard may be used to verify the in-use torque measurement system.

(i) The master load-cell and read out system must be calibrated with weights at each test weight specified in paragraph (b)(1)(i)(A) of this section. The calibration weights must be traceable to within 0.1 percent of NIST weights.

(ii) Warm up the dynamometer following the equipment manufacturer's specifications.

(iii) Attach the master load-cell and loading system.

(iv) Load the dynamometer to a minimum of 6 equally spaced torque values as indicated by the master load-cell for each in-use range used.

(v) The in-use torque measurement must be within 2 percent of the torque measured by the master system for each load used.

(vi) If the in-use torque is not within 2 percent of the master torque, adjust or repair the system. Repeat steps in paragraphs (b)(3)(ii) through (b)(3)(vi) of this section with the adjusted or repaired system.

(4) The dynamometer calibration must be completed within 2 hours from the completion of the dynamometer warm-up.

(d) *Electrical load banks.* Equipment used to measure the electrical power output dissipated by electrical load banks shall be calibrated as frequently as required by § 92.115, using a calibration procedure that is consistent with good engineering practice and approved by the Administrator.

§ 92.117 Gas meter or flow instrumentation calibration, particulate measurement.

(a) Sampling for particulate emissions requires the use of gas meters or flow instrumentation to determine flow through the particulate filters. These instruments shall receive initial and monthly calibrations as follows:

(1)(i) Install a calibration device in series with the instrument. A critical flow orifice, a bellmouth nozzle, or a laminar flow element or an NIST traceable flow calibration device is required as the standard device.

(ii) The flow system should be checked for leaks between the calibration and sampling meters, including any pumps that may be part of the system, using good engineering practice.

(2) Flow air through the calibration system at the sample flow rate used for particulate testing and at the backpressure which occurs during the sample test.

(3) When the temperature and pressure in the system have stabilized, measure the indicated gas volume over a time period of at least five minutes or until a gas volume of at least ±1 percent accuracy can be determined by the standard device. Record the stabilized air temperature and pressure upstream of the instrument and as required for the standard device.

(4) Calculate air flow at standard conditions as measured by both the standard device and the instrument(s).

(5) Repeat the procedures of paragraphs (a)(2) through (4) of this section using at least two flow rates which bracket the typical operating range.

(6) If the air flow at standard conditions measured by the instrument differs by ±1.0 percent of the maximum operating range or ±2.0 percent of the point (whichever is smaller), then a correction shall be made by either of the following two methods:

(i) Mechanically adjust the instrument so that it agrees with the calibration measurement at the specified flow rates using the criteria of paragraph (a)(6) of this section; or

(ii) Develop a continuous best fit calibration curve for the instrument (as a function of the calibration device flow measurement) from the calibration points to determine corrected flow. The points on the calibration curve relative to the calibration device measurements must be within ±1.0 percent of the maximum operating range of ±2.0 percent of the point through the filter.

(b) *Other systems.* A bell prover may be used to calibrate the instrument if the procedure outlined in ANSI B109.1–1992 (incorporated by reference at § 92.5) is used. Prior approval by the Administrator is not required to use the bell prover.

§ 92.118 Analyzer checks and calibrations.

(a)(1) Prior to initial use and after major repairs, bench check each analyzer for compliance with the specifications of § 92.109.

(2) The periodic calibrations are required:

(i) Leak check of the pressure side of the system (see paragraph (b) of this section). If the option described in paragraph (b)(2) of this section is used, a pressure leak check is not required.

(ii) Calibration of all analyzers (see §§ 92.119 through 92.122).

(iii) Check of the analysis system response time (see paragraph (c) of this section). If the option described in paragraph (c)(2) of this section is used, a response time check is not required.

(b) *Leak checks*—(1) *Vacuum side leak check*. (i) Any location within the analysis system where a vacuum leak could affect the test results must be checked.

(ii) The maximum allowable leakage rate on the vacuum side is 0.5 percent of the in-use flow rate for the portion of the system being checked. the analyzer flows and bypass flows may be used to estimate the in-use flow rates.

(iii) The sample probe and the connection between the sample probe and valve V2 may be excluded from the leak check.

(2) *Pressure side leak check*. (i) The maximum allowable leakage rate on the pressure side in 5 percent of the in-use flow rate.

(ii) Option: If the flow rate for each flow meter is equal to or greater than the flow rate recorded in paragraph (c)(2)(i) of this section, then a pressure side leak check is not required.

(c) *System response time; check procedure*. (1) After any major change in the system, check the system response time by the following procedure:

(i) Stabilize the operating temperature of the sample line, sample pump, and heated filters.

(ii) Introduce an HC span gas into the sampling system at the sample probe or valve V2 at atmospheric pressure. Simultaneously, start the time measurement.

(iii) When the HC instrument response is 95 percent of the span gas concentration used, stop the time measurement.

(iv) If the elapsed time is more than 20.0 seconds, make necessary adjustments.

(v) Repeat with the CO, CO_2, and NO_X instruments and span gases.

(2) *Option*. If the following parameters are determined, the initial system response time may be generally applied to future checks:

(i) *Analyzer and bypass flow rates*. (A) Determine by experimentation the minimum analyzer and bypass flow rates individually and in combination that will produce a response time as close as possible to 20.0 seconds per paragraph (c)(1) of this section.

(B) Record the highest minimum flow rate for each flow meter as determined in paragraph (c)(2)(i)(A) of this section.

(ii) *Capillary flow analyzers*. This procedure is applicable only to analyzers that have sample capillaries such as the HFID and CL analyzers. It is also assumed that the system has sample/span valves that perform the function of valves V9 and V13 in.

(A) Operate the analyzer(s) at the in-use capillary pressure.

(B) Adjust the bypass flow rate to the flow rate recorded in paragraph (c)(2)(i)(B) of this section.

(C) Measure and record the response time from the sample/span valve(s) per paragraph (c)(1) of this section.

(D) The response time required by paragraph (c)(2)(ii)(C) of this section can be determined by switching from the ''sample'' position to the ''span'' position of the sample/span valve and observing the analyzer response on a chart recorder. Normally, the ''sample'' position would select a ''room air'' sample and the ''span'' position would select a span gas.

(E) Adjust the bypass flow rate to the normal in-use value.

(F) Measure and record the response time from the sample/span valve(s) per paragraph (c)(1) of this section.

(G) Determine the slowest response time (step in paragraph (c)(2)(ii)(C) of this section or step in paragraph (c)(2)(ii)(D) of this section) and add 2 seconds to it.

§92.119 Hydrocarbon analyzer calibration.

The HFID hydrocarbon analyzer shall receive the following initial and periodic calibration:

(a) *Initial and periodic optimization of detector response.* Prior to introduction into service and at least annually thereafter, the HFID hydrocarbon analyzer shall be adjusted for optimum hydrocarbon response. Alternate methods yielding equivalent results may be used, if approved in advance by the Administrator.

(1) Follow good engineering practices for initial instrument start-up and basic operating adjustment using the appropriate fuel (see §92.112) and zero-grade air.

(2) Optimize on the most common operating range. Introduce into the analyzer a propane-in-air mixture with a propane concentration equal to approximately 90 percent of the most common operating range.

(3) HFID optimization is performed:

(i) According to the procedures outlined in Society of Automotive Engineers (SAE) paper No. 770141, ''Optimization of Flame Ionization Detector for Determination of Hydrocarbons in Diluted Automobile Exhaust'', author, Glenn D. Reschke (incorporated by reference at §92.5); or

(ii) According to the following procedures:

(A) If necessary, follow manufacturer's instructions for instrument start-up and basic operating adjustments.

(B) Set the oven temperature 5 °C hotter than the required sample-line temperature. Allow at least one-half hour after the oven has reached temperature for the system to equilibrate.

(C) *Initial fuel flow adjustment.* With the fuel and air-flow rates set at the manufacturer's recommendations, introduce a 350 ppmC ±75 ppmC span gas to the detector. Determine the response at a given fuel flow from the difference between the span-gas response and the zero-gas response. Incrementally adjust the fuel flow above and below the manufacturer's specification. Record the span and zero response at these fuel flows. A plot of the difference between the span and zero response versus fuel flow will be similar to the one shown in Figure B119–1 of this section. Adjust the fuel-flow rate to the rich side of the curve, as shown. This is initial flow-rate setting and may not be the final optimized flow rate.

(D) *Oxygen interference optimization.* Choose a range where the oxygen interference check gases (see §92.112) will fall in the upper 50 percent. Conduct this test with the oven temperature set as required. Oxygen interference check gas specifications are found in §92.112.

(*1*) Zero the analyzer.

(*2*) Span the analyzer with the 21-percent oxygen blend.

(*3*) Recheck zero response. If it has changed more than 0.5 percent of full scale repeat paragraphs (a)(3)(ii)(D) (*1*) and (*2*) of this section.

(*4*) Introduce the 5 percent and 10 percent oxygen interference check gases.

(*5*) Recheck the zero response. If it has changed more ±1 percent of full scale, repeat the test.

(*6*) Calculate the percent of oxygen interference (%O_2I) for each mixture in step in paragraph (a)(3)(ii)(D)(*4*) of this section.

Percent O_2I=((B-Analyzer response (ppmC))/B)×(100)

Analyzer response=((A)/(Percent of full-scale analyzer response due to A))×(Percent of full-scale analyzer response due to B)

Where:

A=hydrocarbon concentration (ppmC) of the span gas used in step in paragraph (a)(3)(ii)(D)(*2*) of this section.

B=hydrocarbon concentration (ppmC) of the oxygen interference check gases used in step in paragraph (a)(3)(ii)(D)(*4*) of this section.

(*7*) The percent of oxygen interference (%O_2I) must be less than ±3.0 percent for all required oxygen interference check gases prior to testing.

(*8*) If the oxygen interference is greater than the specifications, incrementally adjust the air flow above and below the manufacturer's specifications, repeating paragraphs (a)(3)(ii)(D) (*1*) through (*7*) of this section for each flow.

(*9*) If the oxygen interference is greater than the specification after adjusting the air flow, vary the fuel flow and thereafter the sample flow, repeating paragraphs (a)(3)(ii)(D) (*1*) through (*7*) of this section for each new setting.

(*10*) If the oxygen interference is still greater than the specifications, repair or replace the analyzer, FID fuel, or burner air prior to testing. Repeat this section with the repaired or replaced equipment or gases.

(E) *Linearity check*. For each range used, check linearity as follows:

(*1*) With the fuel flow, air flow and sample flow adjust to meet the oxygen interference specification, zero the analyzer.

(*2*) Span the analyzer using a calibration gas that will provide a response of approximately 90 percent of full-scale concentration.

(*3*) Recheck the zero response. If it has changed more than 0.5 percent of full scale, repeat steps in paragraphs (a)(3)(ii)(E) (*1*) and (*2*) of this seciton.

(*4*) Record the response of calibration gases having nominal concentrations of 30, 60, and 90 percent of full-scale concentration. It is permitted to use additional concentrations.

(*5*) Perform a linear least square regression on the data generated. Use an equation of the form y = mx, where x is the actual chart deflection and y is the concentration.

(*6*) Use the equation z = y/m to find the linear chart deflection (z) for each calibration gas concentration (y).

(*7*) Determine the linearity (%L) for each calibration gas by:

Percent L=(100)(z − x)/(Full-scale linear chart deflection)

(*8*) The linearity criterion is met if the %L is less than ±2 percent for each data point generated. Below 40 ppmC the linearity criterion may be expanded to ±4 percent. For each emission test, a calibration curve of the form y = mx is to be used. The slope (m) is defined for each range by the spanning process.

(*9*) If the %L for any point exceeds the specifications in step in paragraph (a)(3)(ii)(E)(*8*) of this section, the air fuel, and sample-flow rates may be varied within the boundaries of the oxygen interference specifications.

(*10*) If the %L for any data point still exceeds the specifications, repair or replace the analyzer, FID fuel, burner air, or calibration bottles prior to testing. Repeat the procedures of this section with the repaired or replaced equipment or gases.

(F) *Optimized flow rates*. The fuel-flow rate, air-flow rate and sample-flow rate and sample-flow rate are defined as ''optimized'' at this point.

(iii) Alternative procedures may be used if approved in advance by the Administrator.

(4) After the optimum flow rates have been determined they are recorded for future reference.

(b) *Initial and periodic calibration*. Prior to introduction into service and monthly thereafter, the HFID hydrocarbon analyzer shall be calibrated on all normally used instrument ranges. Use the same flow rate and pressures as when analyzing samples. Calibration gases shall be introduced directly at the analyzer.

(1) Adjust analyzer to optimize performance.

(2) Zero the hydrocarbon analyzer with zero-grade air.

(3) Calibrate on each used operating range with propane-in-air calibration gases having nominal concentrations of 15, 30, 45, 60, 75 and 90 percent of that range. For each range calibrated, if the deviation from a least-squares best-fit straight line is 2 percent or less of the value at each data point, concentration values may be calculated by use of single calibration factor for that range. If the deviation exceeds 2 percent at any point, the best-fit non-linear equation which represents the data to within 2 percent of each test point shall be used to determine concentration.

FIGURE TO §92.119

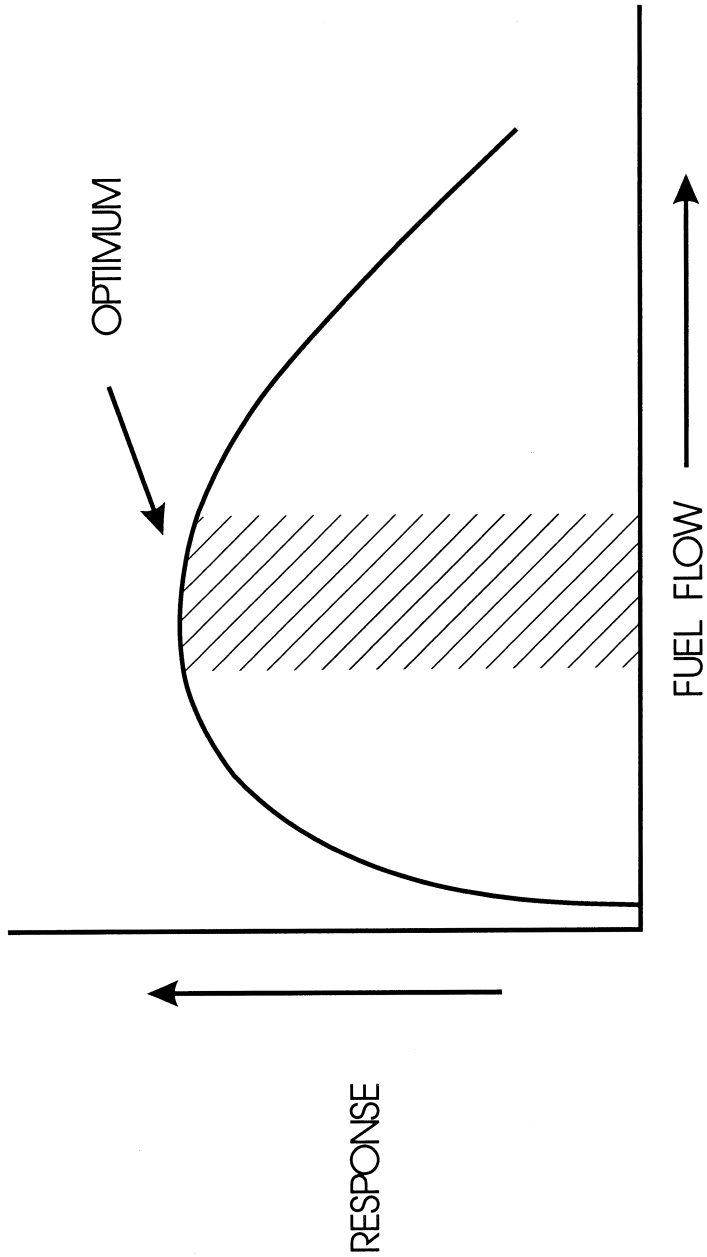

Figure B119-1 RESPONSE VS. FUEL FLOW

§ 92.120 NDIR analyzer calibration and checks.

(a) *NDIR water rejection ratio check.* (1) Zero and span the analyzer on the lowest range that will be used.

(2) Introduce a saturated mixture of water and zero gas at room temperature directly to the analyzer.

(3) Determine and record the analyzer operating pressure (GP) in absolute units in Pascal. Gauges G3 and G4 may be used if the values are converted to the correct units.

(4) Determine and record the temperature of the zero-gas mixture.

(5) Record the analyzers' response (AR) in ppm to the saturated zero-gas mixture.

(6) For the temperature recorded in paragraph (a)(4) of this section, determine the saturation vapor pressure.

(7) Calculate the water concentration (Z) in the mixture from:

$$Z=(PWB/GP)(10^6)$$

(8) Calculate the water rejection ratio (WRR) from:

$$WRR=(Z/AR)$$

(b) *NDIR CO_2 rejection ratio check.* (1) Zero and span the analyzer on the lowest range that will be used.

(2) Introduce a CO_2 calibration gas of at least 10 percent CO_2 or greater to the analyzer.

(3) Record the CO_2 calibration gas concentration in ppm.

(4) Record the analyzers' response (AR) in ppm to the CO_2 calibration gas.

(5) Calculate the CO_2 rejection ratio (CO_2RR) from:

$$CO_2RR=(ppm\ CO_2)/AR$$

(c) *NDIR analyzer calibration.* (1) Detector optimization. If necessary, follow the manufacturer's instructions for initial start-up and basic operating adjustments.

(2) Calibration curve. Develop a calibration curve for each range used as follows:

(i) Zero the analyzer.

(ii) Span the analyzer to give a response of approximately 90 percent of full-scale chart deflection.

(iii) Recheck the zero response. If it has changed more than 0.5 percent of full scale, repeat steps in paragraphs (c)(2)(i) and (c)(2)(ii) of this section.

(iv) Record the response of calibration gases having nominal concentrations of 15, 30, 45, 60, 75, and 90 percent of full-scale concentration.

(v) Generate a calibration curve. The calibration curve shall be of fourth order or less, have five or fewer coefficients, and be of the form of equation (1) or (2). Include zero as a data point. Compensation for known impurities in the zero gas can be made to the zero-data point. The calibration curve must fit the data points within 2 percent of point or 1 percent of full scale, whichever is less. Equations (1) and (2) follow:

$$y = Ax^4+Bx^3+Cx^2+Dx+E \quad (1)$$
$$y = x/(Ax^4+Bx^3+Cx^2+Dx+E) \quad (2)$$

where:

y = concentration.
x = chart deflection.

(vi) Option. A new calibration curve need not be generated if:

(A) A calibration curve conforming to paragraph (c)(2)(v) of this section exists;

(B) The responses generated in paragraph (c)(2)(iv) of this section are within 1 percent of full scale or 2 percent of point, whichever is less, of the responses predicted by the calibration curve for the gases used in paragraph (c)(2)(iv) of this section.

(vii) If multiple range analyzers are used, only the lowest range must meet the curve fit requirements below 15 percent of full scale.

(3) If any range is within 2 percent of being linear a linear calibration may be used. To determine if this criterion is met:

(i) Perform a linear least-square regression on the data generated. Use an equation of the form y=mx, where x is the actual chart deflection and y is the concentration.

(ii) Use the equation z=y/m to find the linear chart deflection (z) for each calibration gas concentration (y).

(iii) Determine the linearity (%L) for each calibration gas by:

$$\text{Percent } L=(100)(z-x)/(\text{Full-scale chart deflection})$$

(iv) The linearity criterion is met if the %L is less than ±2 percent for each data point generated. For each emission test, a calibration curve of the

form y=mx is to be used. The slope (m) is defined for each range by the spanning process.

§ 92.121 Oxides of nitrogen analyzer calibration and check.

(a) *Quench checks; NO_X analyzer.* (1) Perform the reaction chamber quench check for each model of high vacuum reaction chamber analyzer prior to initial use.

(2) Perform the reaction chamber quench check for each new analyzer that has an ambient pressure or ''soft vacuum'' reaction chamber prior to initial use. Additionally, perform this check prior to reusing an analyzer of this type any time any repairs could potentially alter any flow rate into the reaction chamber. This includes, but is not limited to, sample capillary, ozone capillary, and if used, dilution capillary.

(3) Quench check as follows:

(i) Calibrate the NO_X analyzer on the lowest range that will be used for testing.

(ii) Introduce a mixture of CO_2 calibration gas and NO_X calibration gas to the CL analyzer. Dynamic blending may be used to provide this mixture. Dynamic blending may be accomplished by analyzing the CO_2 in the mixture. The change in the CO_2 value due to blending may then be used to determine the true concentration of the NO_X in the mixture. The CO_2 concentration of the mixture shall be approximately equal to the highest concentration experienced during testing. Record the response.

(iii) Recheck the calibration. If it has changed more than ±1 percent of full scale, recalibrate and repeat the quench check.

(iv) Prior to testing, the difference between the calculated NO_X response and the response of NO_X in the presence of CO_2 (step in paragraph (a)(3)(ii) of this section must not be greater than 3.0 percent of full-scale. The calculated NO_X response is based on the calibration performed in step in paragraph (a)(3)(i) this section.

(b) *Oxides of nitrogen analyzer calibration.* (1) Every 30 days, perform a converter-efficiency check (see paragraph (b)(2) of this section) and a linearity check (see paragraph (b)(3) of this section).

(2) Converter-efficiency check. The apparatus described and illustrated in Figure B121–1 of this section is to be used to determine the conversion efficiency of devices that convert NO_2 to NO. The following procedure is to be used in determining the values to be used in the equation below:

(i) Follow the manufacturer's instructions for instrument startup and operation.

(ii) Zero the oxides of nitrogen analyzer.

(iii) Connect the outlet of the NO_X generator to the sample inlet of the oxides of nitrogen analyzer which has been set to the most common operating range.

(iv) Introduce into the NO_X generator-analyzer system a span gas with a NO concentration equal to approximately 80 percent of the most common operating range. The NO_2 content of the gas mixture shall be less than 5 percent of the NO_X concentration.

(v) With the oxides of nitrogen analyzer in the NO Mode, record the concentration of NO indicated by the analyzer.

(vi) Turn on the NO_X generator O_2 (or air) supply and adjust the O_2 (or air) flow rate so that the NO indicated by the analyzer is about 10 percent less than indicated in step in paragraph (b)(2)(v) of this section. Record the concentration of NO in this $NO+O_2$ mixture.

(vii) Switch the NO_X generator to the generation mode and adjust the generation rate so that the NO measured on the analyzer is 20 percent of that measured in step in paragraph (b)(2)(v) of this section. There must be at least 10 percent unreacted NO at this point. Record the concentration of residual NO.

(viii) Switch the oxides of nitrogen analyzer to the NO_X mode and measure total NO_X. Record this value.

(ix) Switch off the NO_X generation, but maintain gas flow through the system. The oxides of nitrogen analyzer will indicate the total NO_X in the $NO+O_2$ mixture. Record this value.

(x) Turn off the NO_X generator O_2 (or air) supply. The analyzer will now indicate the total NO_X in the original NO

in N_2 mixture. This value should be no more than 5 percent above the value indicated in step in paragraph (b)(2)(iv) of this section.

(xi) Calculate the efficiency of the NO_X converter by substituting the concentrations obtained into the following equation:

(A) Percent Efficiency=(1+(a−b)/(c−d))(100)

where:

a=concentration obtained in paragraph (b)(2)(viii) of this section.
b=concentration obtained in paragraph (b)(2)(ix) of this section.
c=concentration obtained in paragraph (b)(2)(vi) of this section.
d=concentration obtained in paragraph (b)(2)(vii) of this section.

(B) The efficiency of the converter shall be greater than 90 percent. Adjustment of the converter temperature may be necessary to maximize the efficiency. If the converter does not meet the conversion-efficiency specifications, repair or replace the unit prior to testing. Repeat the procedures of this section with the repaired or new converter.

(3) Linearity check. For each range used, check linearity as follows:

(i) With the operating parameters adjusted to meet the converter efficiency check and the quench checks, zero the analyzer.

(ii) Span the analyzer using a calibration gas that will give a response of approximately 90 percent of full-scale concentration.

(iii) Recheck the zero response. If it has changed more than 0.5 percent of full scale, repeat steps in paragraphs (b)(3)(i) and (b)(3)(ii) of this section.

(iv) Record the response of calibration gases having nominal concentrations of 30, 60 and 90 percent of full-scale concentration. It is permitted to use additional concentrations.

(v) Perform a linear least-square regression on the data generated. Use an equation of the form y=mx where x is the actual chart deflection and y is the concentration.

(vi) Use the equation z=y/m to find the linear chart deflection (z) for each calibration gas concentration (y).

(vii) Determine the linearity (%L) for each calibration gas by:

Percent L=(100)(z−x)/(Full-scale chart deflection)

(viii) The linearity criterion is met if the %L is less than ±2 percent of each data point generated. For each emission test, a calibration curve of the form y=mx is to be used. The slope (m) is defined for each range by the spanning process.

(ix) If the %L exceeds ±2 percent for any data point generated, repair or replace the analyzer or calibration bottles prior to testing. Repeat the procedures of this section with the repaired or replaced equipment or gases.

(x) Perform a converter-efficiency check (see paragraph (b)(2) of this section).

(xi) The operating parameters are defined as ''optimized'' at this point.

(4) Converter checking gas. If the converter quick-check procedure is to be employed, paragraph (b)(5) of this section, a converter checking gas bottle must be named. The following naming procedure must occur after each converter efficiency check, paragraph (b)(2) of this section.

(i) A gas bottle with an NO_2 concentration equal to approximately 80 percent of the most common operation range shall be designated as the converter checking gas bottle. Its NO concentration shall be less than 25 percent of its NO_2 concentration, on a volume basis.

(ii) On the most common operating range, zero and span the analyzer in the NO_X mode. Use a calibration gas with a concentration equal to approximately 80 percent of the range for spanning.

(iii) Introduce the converter checking gas. Analyze and record concentrations in both the NO_X mode (X) and NO mode (Y).

(iv) Calculate the concentration of the converter checking gas using the results from step in paragraph (b)(4)(iii) of this section and the converter efficiency from paragraph (b)(2) of this section as follows:

Concentration=(((X−Y)(100))/Efficiency)+Y

(5) Converter quick-check.

(i) Span the analyzer in the normal manner (NO_X mode) for the most common operating range.

(ii) Analyze the converter checking gas in the NO_X mode, record the concentration.

(iii) Compare the observed concentration with the concentration assigned under the procedure in paragraph (b)(4) of this section. If the observed concentration is equal to or greater than 90 percent of the assigned concentration, the converter operation is satisfactory.

(c) *Initial and periodic calibration.* Prior to its introduction into service and monthly thereafter, the chemiluminescent oxides of nitrogen analyzer shall be calibrated on all normally used instrument ranges. Use the same flow rate as when analyzing samples. Proceed as follows:

(1) Adjust analyzer to optimize performance.

(2) Zero the oxides of nitrogen analyzer with zero-grade air or zero-grade nitrogen.

(3) Calibrate on each normally used operating range with NO-in-N_2 calibration gases with nominal concentrations of 15, 30, 45, 60, 75 and 90 percent of that range. For each range calibrated, if the deviation from a least-squares best-fit straight line is 2 percent or less of the value at each data point, concentration values may be calculated by use of a single calibration factor for that range. If the deviation exceeds 2 percent at any point, the best-fit non-linear equation which represents the data to within 2 percent of each test point shall be used to determine concentration.

(d) If a stainless steel NO_2 to NO converter is used, condition all new or replacement converters. The conditioning consists of either purging the converter with air for a minimum of 4 hours or until the converter efficiency is greater than 90 percent. The converter must be at operational temperature while purging. Do not use this procedure prior to checking converter efficiency on in-use converters.

FIGURE TO § 92.121

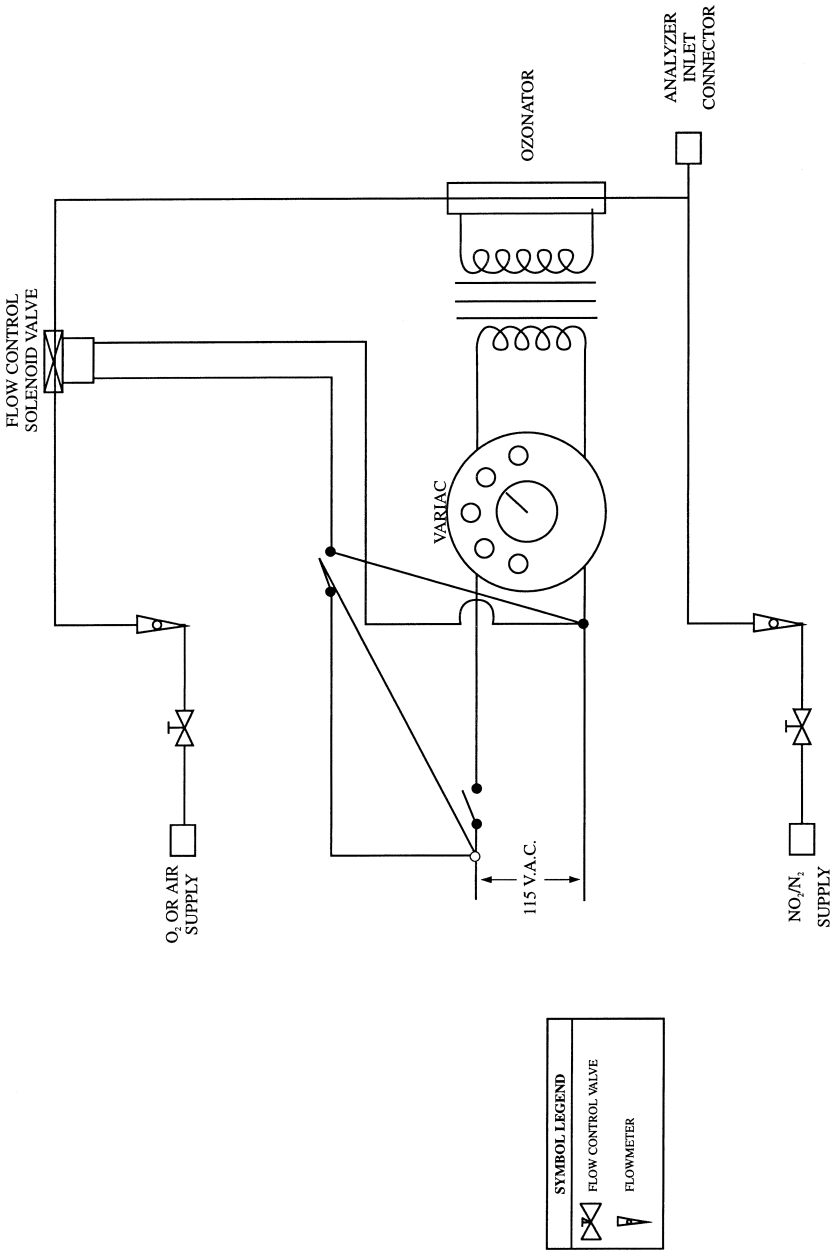

Figure B121-1 NOx CONVERTER EFFICIENCY DETECTOR

§ 92.122 Smoke meter calibration.

The smokemeter shall be checked according to the following procedure prior to each test:

(a) The zero control shall be adjusted under conditions of ''no smoke'' to give a recorder or data collection equipment response of zero;

(b) Calibrated neutral density filters having approximately 10, 20, and 40 percent opacity shall be employed to check the linearity of the instrument. The filter(s) shall be inserted in the light path perpendicular to the axis of the beam and adjacent to the opening from which the beam of light from the light source emanates, and the recorder response shall be noted. Filters with exposed filtering media should be checked for opacity every six months; all other filters shall be checked every year, using NIST or equivalent reference filters. Deviations in excess of 1 percent of the nominal opacity shall be corrected.

§ 92.123 Test procedure; general requirements.

(a) The locomotive/locomotive engine test procedure is designed to determine the brake specific emissions of hydrocarbons (HC, total or non-methane as applicable), total hydrocarbon equivalent (THCE) and aldehydes (as applicable), carbon monoxide (CO), oxides of nitrogen (NO_X), and particulates, and the opacity of smoke emissions. The test procedure consists of measurements of brake specific emissions and smoke opacity at each throttle position and of measurements of smoke opacity during each change in throttle position as engine power is increased. If less than 2 percent of the total exhaust flow is removed for gaseous and particulate sampling in notches 1 through 8, and if less than 4 percent of the total exhaust flow is removed for gaseous and particulate sampling at idle and dynamic brake, all measurements of gaseous, particulate and smoke emissions may be performed during one test sequence. If more than 2 percent, or 4 percent as applicable, of the total exhaust is removed for gaseous and particulate sampling, measurements of gaseous, and particulate emissions are performed during one test sequence, and a second test sequence is performed for the measurement of smoke.

(1) In the raw exhaust sampling procedure, sample is collected directly from the exhaust stream during each throttle setting. Particulates are collected on filters following dilution with ambient air of another raw exhaust sample. The fuel flow rate for each throttle setting is measured.

(2) For locomotives with multiple exhaust stacks, smoke testing is required for only one of the exhaust stacks provided the following conditions are met:

(i) The stack that is not tested is not visibly smokier than the stack that is tested, and

(ii) None of the measured opacity values for the stack tested are greater than three-quarters of the level allowed by any of the applicable smoke standards.

(b) The test consists of prescribed sequences of engine operating conditions (see §§ 92.124 and 92.126) to be conducted either on a locomotive; or with the engine mounted on an engine dynamometer, or attached to a locomotive alternator/generator.

(1) *Locomotive testing.* (i) The electrical power output produced by the alternator/generator at each throttle setting is recorded as measurements of either the wattmeter or the output voltage, phase angle, and current flow through the electrical resistance bank.

(ii) The locomotive fuel supply system shall be disconnected and a system capable of measuring the net rate at which fuel is supplied to the engine (accounting for fuel recycle) shall be connected.

(2) *Engine testing.* (i) When the test is performed using a dynamometer, engine torque and rpm shall be recorded during each throttle setting.

(ii) The complete engine shall be tested, with all emission control devices, and charge air cooling equipment installed and functioning.

(iii) On air-cooled engines, the engine cooling fan shall be installed.

(iv) Additional accessories (e.g., air compressors) shall be installed or their loading simulated if typical of the in-use application. In the case of simulated accessory loadings, the manufacturer shall make available to the Administrator documentation which

shows that the simulated loading is representative of in-use operation. Power for accessories necessary to operate the engine (such as fuel pumps) shall be treated as parasitic losses and would not be included in the engine power output for purposes of calculating brake specific emissions.

(v) The engine may be equipped with a production type starter.

(vi) Means of engine cooling shall be used which will maintain the engine operating temperatures (e.g., temperatures of intake air downstream of charge air coolers, oil, water, etc.) at approximately the same temperature as would occur in a locomotive at each test point under the equivalent ambient conditions. In the case of engine intake air after compression and cooling in the charge air cooler(s), the temperature of the air entering the engine shall be within ±5 °F, at each test point, of the typical temperatures occurring in locomotive operations under ambient conditions represented by the test. Auxiliary fan(s) may be used to maintain engine cooling during operation on the dynamometer. Rust inhibitors and lubrication additives may be used, up to the levels recommended by the additive manufacturer. If antifreeze is to be used in the locomotive application, antifreeze mixtures and other coolants typical of those approved for use in the locomotive may be used.

(vii) The provisions of paragraph (b)(1)(i) of this section apply to engine testing using a locomotive alternator/generator instead of a dynamometer.

[63 FR 18998, Apr. 16, 1998, as amended at 70 FR 40454, July 13, 2005]

§ 92.124 Test sequence; general requirements.

(a) *Air temperature.* (1) The temperature of dilution air for the particulate sample dilution tunnel shall comply with the requirements of § 92.114 throughout the test sequence.

(2) For the testing of locomotives and engines, the ambient (test cell or out-of-door) air temperature, the temperature of the engine intake air, and the temperature of the air which provides cooling for the engine charge air cooling system shall be between 45 °F (7 °C) and 105 °F (41 °C) throughout the test sequence. Manufacturers and remanufacturers may test at higher temperatures without approval from the Administrator, but no corrections are allowed for the deviations from test conditions.

(b) For the testing of locomotives and engines, the atmospheric pressure shall be between 31.0 inches Hg and 26.0 inches Hg throughout the test sequence. Manufacturers and remanufacturers may test at lower pressures without approval from the Administrator, but no corrections are allowed for the deviations from test conditions.

(c) No control of humidity is required for ambient air, engine intake air or dilution air.

(d) *Flow restrictions*—(1) *Locomotive testing.* Restrictions to the flow of air into the engine and of exhaust out of the engine shall be those inherent to the locomotive. No adjustments or changes shall be made to these parameters. The temperature of the inlet fuel to the engine shall not exceed 125 °F.

(2) *Engine testing.* (i) Air inlet and exhaust restrictions shall be set to represent the average restrictions which would be seen in use in a representative application.

(ii) Inlet depression and exhaust backpressure shall be set with the engine operating at rated speed and maximum power, i.e., throttle notch 8.

(iii) The locations at which the inlet depression and exhaust backpressure are measured shall be specified by the manufacturer or remanufacturer.

(iv) The settings shall be made during the preconditioning.

(e) Pre-test engine measurements (e.g., idle and throttle notch speeds, fuel flows, etc.), pre-test engine performance checks (e.g., verification of engine power, etc.) and pre-test system calibrations (e.g., inlet and exhaust restrictions, etc.) can be done during engine preconditioning, or at the manufacturer's convenience subject to the requirements of good engineering practice.

(f) The required test sequence is described in Table B124–1 of this section, as follows:

TABLE B124–1

Test sequence for locomotives and locomotive engines

Mode No.	Notch setting	Time in notch	Emissions measured[2]	Power, and fuel consumption measured
Warmup	Notch 8	5 ±1 min	None	None
Warmup	Lowest Idle	15 min maximum (after engine speed reaches lowest idle speed).	None	None
1a	Low Idle[1]	6 min minimum	All	Both
1	Normal Idle	6 min minimum	All	Both
2	Dynamic Brake[1]	6 min minimum	All	Both
3	Notch 1	6 min minimum	All	Both
4	Notch 2	6 min minimum	All	Both
5	Notch 3	6 min minimum	All	Both
6	Notch 4	6 min minimum	All	Both
7	Notch 5	6 min minimum	All	Both
8	Notch 6	6 min minimum	All	Both
9	Notch 7	6 min minimum	All	Both
10	Notch 8	15 min minimum	All	Both

[1] Omit if not so equipped.
[2] The EPA test sequence for locomotives and locomotive engines may be performed once, with gaseous, particulate and smoke measurements performed simultaneously, or it may be performed twice with gaseous, and particulate measurements performed during one test sequence and smoke measurements performed during the other test sequence. The minimum time in notch is three minutes for test sequences in which only smoke is measured.

[63 FR 18998, Apr. 16, 1998, as amended at 70 FR 40454, July 13, 2005]

§92.125 Pre-test procedures and preconditioning.

(a) *Locomotive testing.* (1) Determine engine lubricating oil and coolant levels and fill as necessary to manufacturers recommended full levels.

(2) Connect fuel supply system and purge as necessary; determine that the fuel to be used during emission testing is in compliance with the specifications of §92.113.

(3) Install instrumentation, engine loading equipment and sampling equipment as required.

(4) Operate the engine until it has reached the specified operating temperature.

(b) *Engine testing.* (1) Determine engine lubricating oil level and fill as necessary to manufacturers recommended full level.

(2)(i) Connect fuel supply system and purge as necessary; determine that the fuel to be used during emission testing is in compliance with the specifications of §92.113.

(ii) Connect engine cooling system.

(3) Install instrumentation, and sampling equipment as required. Couple the engine to the dynamometer or locomotive alternator/generator.

(4) Start cooling system.

(5) Operate the engine until it has reached the specified operating temperature.

(6) Establish that the temperature of intake air entering the engine after compression and cooling in the charge air cooler(s), at each test point, is within ±5 °F of the temperatures which occur in locomotive operations at the ambient temperature represented by the test.

(c) *Both locomotive and engine testing.* (1) Allow a minimum of 30 minutes warm-up in the stand-by or operating mode prior to spanning the analyzers.

(2) Replace or clean filter elements (sampling and analytical systems) as necessary, and then vacuum leak check the system, §92.118. A pressure leak check is also permitted per §92.118. Allow the heated sample line, filters, and pumps to reach operating temperature.

(3) Perform the following system checks:

(i) If a stainless steel NO_2 to NO converter is used, purge the converter with air (zero-grade air, room air, or O_2) for a minimum of 30 minutes. The converter must be at operational temperature while purging.

(ii) Check the sample system temperatures (see §92.114).

(iii) Check the system response time (see §92.118). System response time

may be applied from the most recent check of response time if all of the following are met:

(A) The flow rate for each flow meter is equal to or greater than the flow rate recorded in § 92.118.

(B) For analyzers with capillaries, the response time from the sample/span valve is measured using in-use pressures and bypass flows (see § 92.118).

(C) The response time measured in step in paragraph (c)(3)(iii)(B) of this section is equal to or less than the slowest response time determined for *Capillary flow analyzers* in § 92.118 plus 2 seconds.

(iv) A hang-up check is permitted.

(v) A converter-efficiency check is permitted. The check need not conform to § 92.121. The test procedure may be aborted at this point in the procedure in order to repair the NO_2 to NO converter. If the test is aborted, the converter must pass the efficiency check described in § 92.121 prior to starting the test run.

(4) Introduce the zero-grade gases at the same flow rates and pressures used to calibrate the analyzers and zero the analyzers on the lowest anticipated range that will be used during the test. Immediately prior to each test, obtain a stable zero for each anticipated range that will be used during the test.

(5) Introduce span gases to the instruments under the same flow conditions as were used for the zero gases. Adjust the instrument gains on the lowest range that will be used to give the desired value. Span gases should have a concentration greater than 70 percent of full scale for each range used. Immediately prior to each test, record the response to the span gas and the span-gas concentration for each range that will be used during the test.

(6) Check the zero responses. If they have changed more than 0.5 percent of full scale, repeat paragraphs (c)(4) and (5) of this section.

(7) Check system flow rates and pressures. Note the values of gauges for reference during the test.

§ 92.126 Test run.

(a) The following steps shall be taken for each test:

(1) Prepare the locomotive, engine, dynamometer, (as applicable) and sampling system for the test. Change filters, etc. and leak check as necessary.

(2) Connect sampling equipment as appropriate for the sampling procedure employed; i.e. raw or dilute (evacuated sample collection bags, particulate, and raw exhaust sampling equipment, particulate sample filters, fuel flow measurement equipment, etc.).

(3) Start the particulate dilution tunnel, the sample pumps, the engine cooling fan(s) (engine dynamometer testing) and the data collection and sampling systems (except particulate sample collection). The heated components of any continuous sampling systems(s) (if applicable) shall be preheated to their designated operating temperatures before the test begins.

(4) Adjust the sample flow rates to the desired flow rates and set gas flow measuring devices to zero (particulate dilution tunnel).

(5) Read and record all required general and pre-test data (i.e., all required data other than data that can only be collected during or after the emission test).

(6) Warm-up the locomotive or locomotive engines according to normal warm-up procedures.

(7) Begin the EPA Test Sequence for Locomotives and Locomotive Engines (see § 92.124). Record all required general and test data throughout the duration of the test sequence.

(i) Mark the start of the EPA Test Sequence for Locomotives and Locomotive Engines on all data records.

(ii) Begin emission measurement after completing the warmup phase of the EPA Test Sequence for Locomotives and Locomotive Engines, as specified in paragraph (b) of this section. Mark the start and end of each mode on all data records.

(iii) A mode shall be voided where the requirements of this subpart that apply to that test mode are not met. This includes the following:

(A) The data acquisition is terminated prematurely; or

(B) For engine testing, the engine speed or power output exceeds the tolerance bands established for that mode; or

(C) Measured concentrations exceed the range of the instrument; or

(D) The test equipment malfunctions.

(iv) Modes within the test sequence shall be repeated if it is voided during the performance of the test sequence. A mode can be repeated by:

(A) Repeating the two preceding modes and then continuing with the test sequence, provided that the locomotive or engine is not shut down after the voided test mode; or

(B) Repeating the preceding mode and then continuing with the test sequence from that point, provided that the locomotive or engine is not operated in any mode with lower power than the preceding mode after the voided test mode. For example, if the Notch 2 mode is voided, then the locomotive or engine would be returned to Notch 1 while any repairs are made.

(b) *Sampling and measurement timing.* (1) Gaseous emissions shall be sampled and measured continuously.

(2)(i) Sampling of particulate emissions from the raw exhaust (for dilution) shall be conducted continuously.

(ii) Sampling of particulates from the diluted exhaust shall begin within ten seconds after the beginning of each test mode, and shall end six minutes after the beginning of each test mode.

(iii) Sampling of CO_2 in the dilution air and diluted exhaust does not need to be continuous, but the measurements used for the calculations must be made after the first two minutes of each mode.

(3) Fuel flow rate shall be measured continuously. The value reported for the fuel flow rate shall be a one-minute average of the instantaneous fuel flow measurements taken during the last minute of the minimum sampling period listed in Table B124–1 in § 92.124; except for testing during idle modes, where it shall be a three-minute average of the instantaneous fuel flow measurements taken during the last three minutes of the minimum sampling period listed in Table B124–1 in § 92.124. Sampling periods greater than one minute are allowed, consistent with good engineering practice. Fuel flow averaging periods should generally match the emission sampling periods as closely as is practicable.

(4) Engine power shall be measured continuously. The value reported for the engine power shall be a one-minute average of the instantaneous power measurements taken during the last minute of the minimum sampling period listed in Table B124–1 in § 92.124.

(c) *Exhaust gas measurements.* (1) Should the analyzer response exceed 100 percent of full scale or respond less than 15 percent of full scale, the next higher or lower analyzer range shall be used.

(2) Each analyzer range that may be used during a test sequence must have the zero and span responses recorded prior to the execution of the test sequence. Only the range(s) used to measure the emissions during a test sequence are required to have their zero and span recorded after the completion of the test sequence.

(3) It is permitted to change filter elements between test modes, provided such changes do not cause a mode to be voided.

(4) A leak check is permitted between test modes, provided such changes do not cause a mode to be voided.

(5) A hang-up check is permitted between test modes, provided such changes do not cause a mode to be voided.

(6) If, during the emission measurement portions of a test, the value of the gauges downstream of the NDIR analyzer(s) differs by more than ±2 inches of water from the pretest value, the test is void.

(7)(i) For bag samples, as soon as possible transfer the exhaust and dilution air bag samples to the analytical system and process the samples.

(ii) A stabilized reading of the exhaust sample bag on all applicable analyzers shall be made within 20 minutes of the end of the sample collection phase of the mode.

[63 FR 18998, Apr. 16, 1998, as amended at 70 FR 40454, July 13, 2005]

§ 92.127 Emission measurement accuracy.

(a) Good engineering practice dictates that exhaust emission sample analyzer readings below 15 percent of full scale chart deflection should generally not be used.

(b) Some high resolution read-out systems such as computers, data loggers, etc., can provide sufficient accuracy and resolution below 15 percent of full scale. Such systems may be used

provided that additional calibrations are made to ensure the accuracy of the calibration curves. The following procedure for calibration below 15 percent of full scale may be used:

(1) If a 16-point gas divider is used, 50 percent of the calibration points shall be below 10 percent of full scale. The gas divider shall conform to the accuracy requirements specified in § 92.112.

(2) If a 7- or 9-point gas divider is used, the gas divider shall conform to the accuracy requirements specified in § 92.112, and shall be used according to the following procedure:

(i) Span the full analyzer range using a top range calibration gas meeting the calibration gas accuracy requirements of § 92.112.

(ii) Generate a calibration curve according to, and meeting the applicable requirements of §§ 92.118 through 92.122.

(iii) Select a calibration gas (a span gas may be used for calibrating the CO_2 analyzer) with a concentration between the two lowest non-zero gas divider increments. This gas must be ''named'' to an accuracy of ±1.0 percent (±2.0 percent for CO_2 span gas) of NIST gas standards, or other standards approved by the Administrator.

(iv) Using the calibration curve fitted to the points generated in paragraphs (b)(2)(i) and (ii) of this section, check the concentration of the gas selected in paragraph (b)(2)(iii) of this section. The concentration derived from the curve shall be within ±2.3 percent (±2.8 percent for CO_2 span gas) of the gas' original named concentration.

(v) Provided the requirements of paragraph (b)(2)(iv) of this section are met, use the gas divider with the gas selected in paragraph (b)(2)(iii) of this section and determine the remainder of the calibration points. Fit a calibration curve per §§ 92.118 through 92.122 for the entire analyzer range.

§ 92.128 Particulate handling and weighing.

(a) At least 1 hour before the test, place each filter in a closed (to eliminate dust contamination) but unsealed (to permit humidity exchange) petri dish and place in a weighing chamber meeting the specifications of § 92.110(a) of this section for stabilization.

(b) At the end of the stabilization period, weigh each filter on the microbalance. This reading is the tare weight and must be recorded.

(c) The filter shall then be stored in a covered petri dish or a sealed filter holder until needed for testing. If the filters are transported to a remote test location, the filter pairs, stored in individual petri dishes, should be transported in sealed plastic bags to prevent contamination. At the conclusion of a test run, the filters should be removed from the filter holder, and placed face to face in a covered but unsealed petri dish, with the primary filter placed face up in the dish. The filters shall be weighed as a pair. If the filters need to be transported from a remote test site, back to the weighing chamber, the petri dishes should be placed in a sealed plastic bag to prevent contamination. Care should be taken in transporting the used filters such that they are not exposed to excessive, sustained direct sunlight, or excessive handling.

(d) After the emissions test, and after the sample and back-up filters have been returned to the weighing room after being used, they must be conditioned for at least 1 hour but not more than 80 hours and then weighed. This reading is the gross weight of the filter and must be recorded.

(e) The net weight of each filter is its gross weight minus its tare weight. Should the sample on the filter contact the petri dish or any other surface, the test is void and must be rerun.

(f) The particulate filter weight (Pf) is the sum of the net weight of the primary filter plus the net weight of the backup filter.

(g) The following optional weighting procedure is permitted:

(1) At the end of the stabilization period, weigh both the primary and back-up filters as a pair. This reading is the tare weight and must be recorded.

(2) After the emissions test, in removing the filters from the filter holder, the back-up filter is inverted on top of the primary filter. They must then be conditioned in the weighing chamber for at least 1 hour but not more than 80 hours. The filters are then weighed as a pair. This reading is the gross weight of the filters (Pf) and must be recorded.

(3) Paragraphs (a), (c), and (e) of this section apply to this option, except that the word ''filter'' is replaced by ''filters''.

§ 92.129 Exhaust sample analysis.

(a) The analyzer response may be read by automatic data collection (ADC) equipment such as computers, data loggers, etc. If ADC equipment is used the following is required:

(1) The response complies with § 92.130.

(2) The response required in paragraph (a)(1) of this section may be stored on long-term computer storage devices such as computer tapes, storage discs, or they may be printed in a listing for storage. In either case a chart recorder is not required and records from a chart recorder, if they exist, need not be stored.

(3) If the data from ADC equipment is used as permanent records, the ADC equipment and the analyzer values as interpreted by the ADC equipment are subject to the calibration specifications in §§ 92.118 through 92.122, as if the ADC equipment were part of the analyzer.

(b) Data records from any one or a combination of analyzers may be stored as chart recorder records.

(c) Software zero and span.

(1) The use of ''software'' zero and span is permitted. The process of software zero and span refers to the technique of initially adjusting the analyzer zero and span responses to the calibration curve values, but for subsequent zero and span checks the analyzer response is simply recorded without adjusting the analyzer gain. The observed analyzer response recorded from the subsequent check is mathematically corrected back to the calibration curve values for zero and span. The same mathematical correction is then applied to the analyzer's response to a sample of exhaust gas in order to compute the true sample concentration.

(2) The maximum amount of software zero and span mathematical correction is ±10 percent of full scale chart deflection.

(3) Software zero and span may be used to switch between ranges without adjusting the gain of the analyzer.

(4) The software zero and span technique may not be used to mask analyzer drift. The observed chart deflection before and after a given time period or event shall be used for computing the drift. Software zero and span may be used after the drift has been computed to mathematically adjust any span drift so that the ''after'' span check may be transformed into the ''before'' span check for the next mode.

(d) For sample analysis perform the following sequence:

(1) Warm-up and stabilize the analyzers; clean and/or replace filter elements, conditioning columns (if used), etc., as necessary.

(2) Leak check portions of the sampling system that operate at negative gauge pressures when sampling, and allow heated sample lines, filters, pumps, etc., to stabilize at operating temperature.

(3) Optional: Perform a hang-up check for the HFID sampling system:

(i) Zero the analyzer using zero air introduced at the analyzer port.

(ii) Flow zero air through the overflow sampling system, where an overflow system is used. Check the analyzer response.

(iii) If the overflow zero response exceeds the analyzer zero response by 2 percent or more of the HFID full-scale deflection, hang-up is indicated and corrective action must be taken.

(iv) The complete system hang-up check specified in paragraph (f) of this section is recommended as a periodic check.

(4) Obtain a stable zero reading.

(5) Zero and span each range to be used on each analyzer used prior to the beginning of the test sequence. The span gases shall have a concentration between 75 and 100 percent of full scale chart deflection. The flow rates and system pressures shall be approximately the same as those encountered during sampling. The HFID analyzer shall be zeroed and spanned through the overflow sampling system, where an overflow system is used.

(6) Re-check zero response. If this zero response differs from the zero response recorded in paragraph (d)(5) of this section by more than 1 percent of full scale, then paragraphs (d) (4), (5),

and (6) of this section should be repeated.

(7) If a chart recorder is used, identify and record the most recent zero and span response as the pre-analysis values.

(8) If ADC equipment is used, electronically record the most recent zero and span response as the pre-analysis values.

(9) Measure (or collect a sample of) the emissions continuously during each mode of the test cycle. Indicate the start of the test, the range(s) used, and the end of the test on the recording medium (chart paper or ADC equipment). Maintain approximately the same flow rates and system pressures used in paragraph (d)(5) of this section.

(10)(i) Collect background HC, CO, CO_2, and NO_X in a sample bag (optional).

(ii) Measure the concentration of CO_2 in the dilution air and the diluted exhaust for particulate measurements.

(11) Perform a post-analysis zero and span check for each range used at the conditions specified in paragraph (d)(5) of this section. Record these responses as the post-analysis values.

(12) Neither the zero drift nor the span drift between the pre-analysis and post-analysis checks on any range used may exceed 3 percent for HC, or 2 percent for NO_X. CO, and CO_2, of full scale chart deflection, or the test is void. (If the HC drift is greater than 3 percent of full-scale chart deflection, hydrocarbon hang-up is likely.)

(13) Determine HC background levels (if necessary) by introducing the background sample into the overflow sample system.

(14) Determine background levels of NO_X. CO, or CO_2 (if necessary).

(e) HC hang-up. If HC hang-up is indicated, the following sequence may be performed:

(1) Fill a clean sample bag with background air.

(2) Zero and span the HFID at the analyzer ports.

(3) Analyze the background air sample bag through the analyzer ports.

(4) Analyze the background air through the entire sample probe system.

(5) If the difference between the readings obtained is 2 percent or more of the HFID full scale deflection:

(i) Clean the sample probe and the sample line;

(ii) Reassemble the sample system;

(iii) Heat to specified temperature; and

(iv) Repeat the procedure in this paragraph (e).

§ 92.130 Determination of steady-state concentrations.

(a)(1) For HC and NO_X emissions, a steady-state concentration measurement, measured after 300 seconds (or 840 seconds for notch 8) of testing shall be used instead of an integrated concentration for the calculations in § 92.132 if the concentration response meets either of the criteria of paragraph (b) of this section and the criterion of paragraph (c) of this section.

(2) For CO and CO_2 emissions, a steady-state concentration measurement, measured after 300 seconds (or 840 seconds for notch 8) of testing shall be used. The provisions of paragraphs (b) through (f) of this section do not apply for CO and CO_2 emissions.

(b) (1) The steady-state concentration is considered representative of the entire measurement period if the time-weighted concentration is not more than 10 percent higher than the steady-state concentration. The time-weighted concentration is determined by integrating the concentration response (with respect to time in seconds) over the first 360 seconds (or 900 seconds for notch 8) of measurement, and dividing the area by 360 seconds (or 900 seconds for notch 8).

(2) A steady-state concentration is considered representative of the entire measurement period if the estimated peak area is not more than 10 percent of the product of the steady-state concentration and 360 seconds (or 900 seconds for notch 8). The estimated peak area is calculated as follows, and as shown in Figure B130–1 of this section):

(i) Draw the peak baseline as a straight horizontal line intersecting the steady-state response.

(ii) Measure the peak height from the baseline with the same units as the steady-state concentration; this value is h.

(iii) Bisect the peak height by drawing a straight horizontal line halfway between the top of the peak and the baseline.

(iv) Draw a straight line from the top of the peak to the baseline such that it intersects the response curve at the same point at which the line described in paragraph (b)(2)(iii) of this section intersects the response curve.

(v) Determine the time between the point at which the notch was changed and the point at which the line described in paragraph (b)(2)(iv) of this section intersects the baseline; this value is t.

(vi) The estimated peak area is equal to the product of h and t, divided by 2.

(c) In order to be considered to be a steady-state measurement, a measured response may not vary by more than 5 percent after the first 60 seconds of measurement.

(d) For responses meeting either of the criteria of paragraph (b) of this section, but not meeting the criterion of paragraph (c) of this section, one of the following values shall be used instead of a steady-state or integrated concentration:

(1) The highest value of the response that is measured after the first 60 seconds of measurement (excluding peaks lasting less than 5 seconds, caused by such random events as the cycling of an air compressor); or

(2) The highest 60-second, time-weighted, average concentration of the response after the first 60 seconds of measurement.

(e) For responses not meeting the criterion in paragraph (c) of this section, the Administrator may require that the manufacturer or remanufacturer identify the cause of the variation, and demonstrate that it is not caused by a defeat device.

(f) The integrated concentration used for calculations shall be from the highest continuous 120 seconds of measurement.

(g) Compliance with paragraph (b)(2) of this section does not require calculation where good engineering practice allows compliance to be determined visually (i.e., that the area of the peak is much less than the limits set forth in paragraph (b)(2) of this section).

FIGURE TO § 92.130

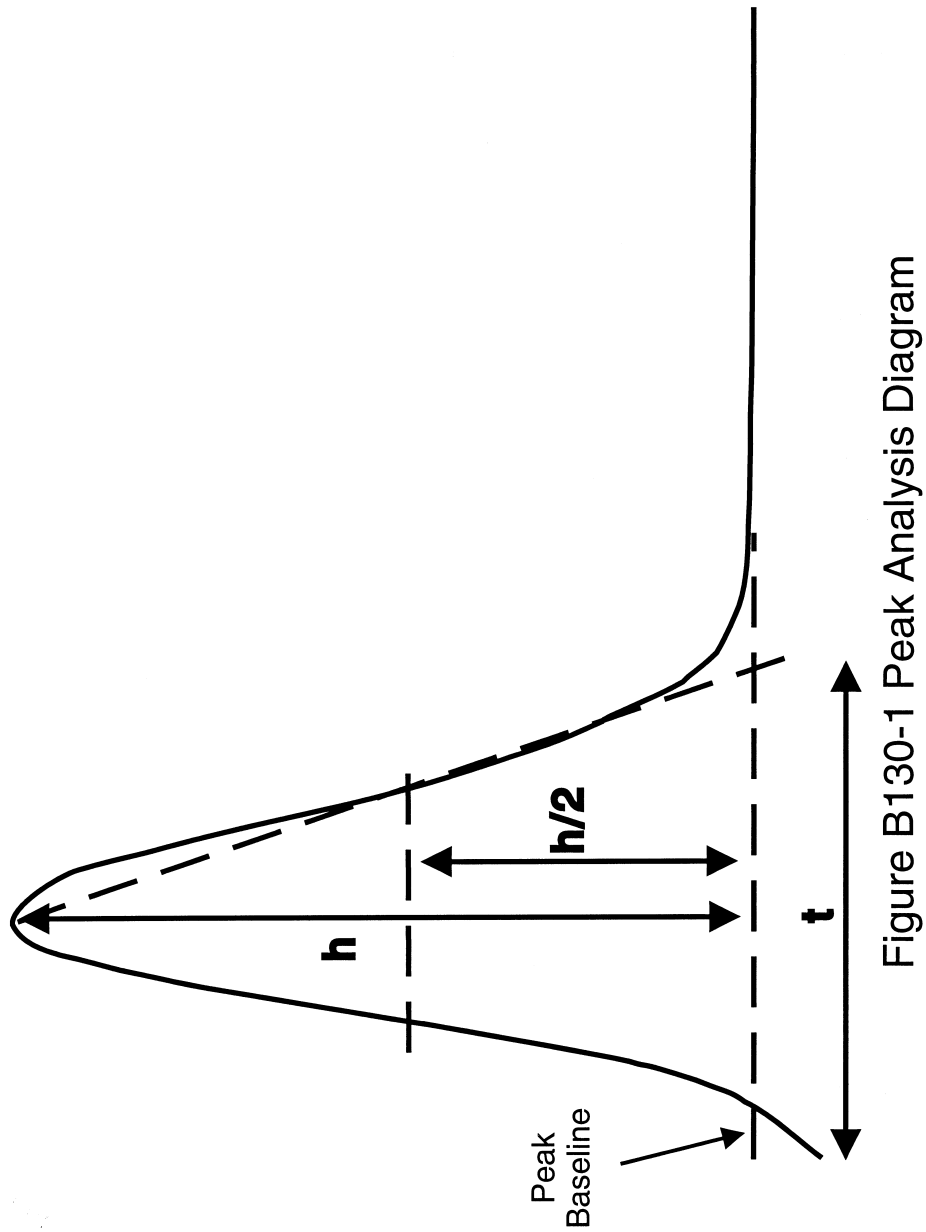

Figure B130-1 Peak Analysis Diagram

§ 92.131 Smoke, data analysis.

The following procedure shall be used to analyze the smoke test data:

(a) Locate each throttle notch test mode, or percent rated power setting test mode. Each test mode starts when

the throttle is placed in the mode and ends when the throttle is moved to the succeeding mode. The start of the first idle mode corresponds to the start of the test sequence.

(b) Analyze the smoke trace by means of the following procedure:

(1) Locate the highest reading, and integrate the highest 3-second average reading around it.

(2) Locate and integrate the highest 30-second average reading.

(3) The ''steady-state'' value is either:

(i) The highest reading occurring more than two minutes after the notch change (excluding peaks lasting less than 5 seconds, caused by such random events as the cycling of an air compressor) if opacity measurements are recorded graphically; or

(ii) The average of the second by second values between 120 and 180 seconds after the notch change if opacity measurements are recorded digitally.

(c)(1) The values determined in paragraph (b) of this section shall be normalized by the following equation:

$$N_n = 100 \times \left[1 - \left[1 - \frac{N_m}{100} \right]^{1/L} \right]$$

Where:

N_n is the normalized percent opacity, N_m is the average measured percent opacity (peak or steady-state), and L is actual distance in meters from the point at which the light beam enters the exhaust plume to the point at which the light beam leaves the exhaust plume.

(2) The normalized opacity values determined in paragraph (c)(1) of this section are the values that are compared to the standards of subpart A of this part for determination of compliance.

(d) This smoke trace analysis may be performed by direct analysis of the recorder traces, or by computer analysis of data collected by automatic data collection equipment.

[63 FR 18998, Apr. 16, 1998, as amended at 70 FR 40455, July 13, 2005]

§ 92.132 Calculations.

(a) *Duty-cycle emissions*. This section describes the calculation of duty-cycle emissions, in terms of grams per brake horsepower hour (g/bhp-hr). The calculation involves the weighted summing of the product of the throttle notch mass emission rates and dividing by the weighted sum of the brake horsepower. The final reported duty-cycle emission test results are calculated as follows:

(1)(i) $E_{idc}=(\Sigma(M_{ij})(F_j))/(\Sigma(BHP_j)(F_j))$

Where:

E_{idc}=Duty-cycle weighted, brake-specific mass emission rate of pollutant i (i.e., HC, CO, NO_X or PM and, if appropriate, THCE or NMHC) in grams per brake horsepower-hour;

M_{ij}=the mass emission rate pollutant i for mode j;

F_j=the applicable weighting factor listed in Table B132–1 for mode j;

BHP_j=the measured brake horsepower for mode j.

(ii) Table B132–1 follows:

TABLE B132–1—WEIGHTING FACTORS FOR CALCULATING EMISSION RATES

Throttle notch setting	Test mode	Locomotive not equipped with multiple idle notches		Locomotive equipped with multiple idle notches	
		Line-haul	Switch	Line-haul	Switch
Low Idle	1a	NA	NA	0.190	0.299
Normal Idle	1	0.380	0.598	0.190	0.299
Dynamic Brake	2	0.125	0.000	0.125	0.000
Notch 1	3	0.065	0.124	0.065	0.124
Notch 2	4	0.065	0.123	0.065	0.123
Notch 3	5	0.052	0.058	0.052	0.058
Notch 4	6	0.044	0.036	0.044	0.036
Notch 5	7	0.038	0.036	0.038	0.036
Notch 6	8	0.039	0.015	0.039	0.015

TABLE B132–1—WEIGHTING FACTORS FOR CALCULATING EMISSION RATES—Continued

Throttle notch setting	Test mode	Locomotive not equipped with multiple idle notches		Locomotive equipped with multiple idle notches	
		Line-haul	Switch	Line-haul	Switch
Notch 7	9	0.030	0.002	0.030	0.002
Notch 8	10	0.162	0.008	0.162	0.008

(2) Example: For the line-haul cycle, for locomotives equipped with normal and low idle, and with dynamic brake, the brake-specific emission rate for HC would be calculated as:

$$E_{HCdc}=[(M_{HCla})\ (0.190)+(M_{HC1})\ (0.190)+(M_{HC2})\ (0.125)+(M_{HC3})\ (0.065)+(M_{HC4})\ (0.065)+(M_{HC5})\ (0.052)+(M_{HC6})\ (0.044)+(M_{HC7})\ (0.038)+(M_{HC8})\ (0.039)+(M_{HC9})\ (0.030)+(M_{HC10})\ (0.162)]/[(BHP_{1a})\ (0.190)+(BHP_1)\ (0.190)+(BHP_2)\ (0.125)+(BHP_3)\ (0.065)+(BHP_4)\ (0.065)+(BHP_5)\ (0.052)+(BHP_6)\ (0.044)+(BHP_7)\ (0.038)+(BHP_8)\ (0.039)+(BHP_9)\ (0.030)+(BHP_{10})\ (0.162)]$$

(3) In each mode, brake horsepower output is the power that the engine delivers as output (normally at the flywheel), as defined in § 92.2.

(i) For locomotive testing (or engine testing using a locomotive alternator/generator instead of a dynamometer), brake horsepower is calculated as:

$$BHP=HP_{out}/A_{eff}+HP_{acc}$$

Where:

HP_{out}=Measured horsepower output of the alternator/generator.

A_{eff}=Efficiency of the alternator/generator.

HP_{acc}=Accessory horsepower.

(ii) For engine dynamometer testing, brake horsepower is determined from the engine speed and torque.

(4) For locomotive equipped with features that shut the engine off after prolonged periods of idle, the measured mass emission rate M_{i1} (and M_{i1a} as applicable) shall be multiplied by a factor equal to one minus the estimated fraction reduction in idling time that will result in use from the shutdown feature. Application of this adjustment is subject to the Administrator's approval.

(b) *Throttle notch emissions.* This paragraph (b) describes the calculation of throttle notch emissions for all operating modes, including: idle (normal and low, as applicable); dynamic brake; and traction power points. The throttle notch (operating mode) emission test results, final reported values and values used in paragraph (a)(1) of this section are calculated as follows:

(1) Brake specific emissions (E_{ij}) in grams per brake horsepower-hour of each species i (i.e., HC, CO, NO_X or PM and, if appropriate, THCE or NMHC) for each mode j:

(i) $E_{HC\ mode}$=HC grams/BHP-hr=$M_{HC\ mode}$/Measured BHP in mode.

Where:

$M_{HC\ mode}$=Mass HC emissions (grams per hour) for each test mode.

(ii) $E_{THCE\ mode}$=THCE grams/BHP-hr=$M_{THCE\ mode}$/Measured BHP in mode.

Where:

$M_{THCE\ mode}$ (Total hydrocarbon equivalent mass emissions (grams per hour) for each test mode):

$=M_{HCj}+\Sigma\ (M_{ij})\ (MWC_p)/MWC_i$

M_{ij}=the mass emission rate oxygenated pollutant i for mode j.

MWC_i=the molecular weight of pollutant i divided by the number of carbon atoms per molecule of pollutant i.

MWC_p=the molecular weight of a typical petroleum fuel component divided by the number of carbon atoms per molecule of a typical petroleum fuel component=13.8756.

(iii) $E_{NMHC\ mode}$=NMHC grams/BHP-hr=$M_{NMHC\ mode}$/Measured BHP in mode.

Where:

$M_{NMHC\ mode}$=Mass NMHC emissions (grams per hour) for each test mode.

(iv) $E_{CO\ mode}$=CO grams/BHP-hr=$M_{CO\ mode}$/Measured BHP in mode.

Where:

$M_{CO\ mode}$=Mass CO emissions (grams per hour) for each test mode.

(v) $E_{NOx\ mode}$=NO_X grams/BHP–hr=$M_{NOx\ mode}$/Measured BHP in mode.

Where:

$M_{NOx\ mode}$=Mass NO_X emissions (grams per hour) for each test mode.

(vi) $E_{PM\ mode}$=PM grams/BHP-hr=$M_{PM\ mode}$/Measured BHP in mode.

Where:

$M_{PM\ mode}$=Mass PM emissions (grams per hour) for each test mode.

(vii) $E_{AL\ mode}$=Aldehydes grams/BHP-hr=$M_{AL\ mode}$/Measured BHP in mode.

(vii) $E_{AL\ mode}$=Aldehydes grams/BHP-hr=$M_{AL\ mode}$/Measured BHP in mode.

Where:

$M_{AL\ mode}$=Total aldehyde mass emissions (grams per hour) for each test mode.

(2) Mass Emissions—Raw exhaust measurements. For raw exhaust measurements mass emissions (grams per hour) of each species for each mode:

(i) General equations. (A) The mass emission rate, $M_{X\ mode}$ (g/hr), of each pollutant (HC, NO_X. CO_2, CO, CH_4 CH_3OH, CH_3CH_2OH, CH_2O, CH_3CH_2O) for each operating mode for raw measurements is determined based on one of the following equations:

$$M_{X\ mode}=(DX/10^6)(DVol)(MW_X/V_m)$$
$$M_{X\ mode}=(WX/10^6)(WVol)(MW_X/V_m)$$

Where:

X designates the pollutant (e.g., HC), DX is the concentration of pollutant X (ppm or ppmC) on a dry basis, MW_X is the molecular weight of the pollutant (g/mol), DVol is the total exhaust flow rate (ft^3/hr) on a dry basis, WX is the concentration of pollutant X (ppm or ppmC) on a wet basis, WVol is the total exhaust flow rate (ft^3/hr) on a wet basis, V_m is the volume of one mole of gas at standard temperature and pressure (ft^3/mol).

(B) All measured volumes and volumetric flow rates must be corrected to standard temperature and pressure prior to calculations.

(ii) The following abbreviations and equations apply to this paragraph (b)(2):

α=Atomic hydrogen/carbon ratio of the fuel.
β=Atomic oxygen/carbon ratio of the fuel.
CMW_f=Molecular weight of the fuel per carbon atom, or carbon molecular weight (g/moleC)=$(12.011+1.008\alpha+16.000\beta)$.
DCO=CO concentration in exhaust, ppm (dry).
DCO_2=CO_2 concentration in exhaust, percent (dry).
DHC=HC carbon concentration in exhaust, ppm C (dry).
DNOX=NO_X concentration in exhaust, in ppm (dry).
DVol=Total exhaust flow rate (ft^3/hr) on a dry basis; or
$=(V_m)(W_f)/((CMW_f)\ (DHC/10^6+DCO/10^6+DCO2/100))$.
K=Water gas equilibrium constant=3.5.
K_w=Wet to dry correction factor.
M_F=Mass flow-rate of fuel used in the engine in lb/hr=W_f/453.59.
MW_C=Atomic weight of carbon=12.011.
MW_{CO}=Molecular weight of CO=28.011.
MW_H=Atomic weight of hydrogen=1.008.
MW_{NO2}=Molecular weight of nitrogen dioxide (NO_2)=46.008.
MW_O=Molecular weight of atomic oxygen=16.000.
T=Temperature of inlet air (°F).
V_m=Volume of one mole of gas at standard temperature and pressure (ft^3/mole).
W_f=Mass flow-rate of fuel used in the engine, in grams/hr=(453.59)×(M_f lbs/hr).
WCO_2=CO_2 concentration in exhaust, percent (wet).
WHC=HC concentration in exhaust, ppm C (wet).
WVol=Total exhaust flow rate (ft^3/hr) on a wet basis; or
$=(V_m)(W_f)/((CMW_f)(WHC/10^6+WCO/10^6\ WCO2/100))$.

(iii) Calculation of individual pollutant masses. Calculations for mass emission are shown here in multiple forms. One set of equations is used when sample is analyzed dry (equations where the concentrations are expressed as DX), and the other set is used when the sample is analyzed wet (equations where the concentrations are expressed as WX). When samples are analyzed for some constituents dry and for some constituents wet, the wet concentrations must be converted to dry concentrations, and the equations for dry concentrations used. Also, the equations for HC, NMHC, CO, and NO_X have multiple forms that are algebraically equivalent: An explicit form that requires intermediate calculation of V_m and DVol or WVol; and an implicit form that uses only the concentrations (e.g., DCO) and the mass flow rate of the fuel. For these calculations, either form may be used.

(A) Hydrocarbons and nonmethane hydrocarbons.

(*1*) Hydrocarbons. (*i*) *For petroleum-fueled engines:*

$$M_{HC\ mode}=(DHC)CMW_f(DVol)(10^6)/V_m$$
$$=((DHC/10^6)(W_f)/((DCO/10^6)+(DCO_2/100)+(DHC/10^6)+(\Sigma DX/10^6)))$$
$$M_{HC\ mode}=(WHC)CMW_f(WVol)(10^6)/V_m$$

$=((WHC/10^6)(W_f)/((WCO/10^6)+(WCO_2/100)+(WHC/10^6)+(\Sigma(WX/10^6)))$

(*ii*) *For alcohol-fueled engines:*

$DHC=FID\ HC-\Sigma(r_x)(DX)$
$WHC=FID\ HC-\Sigma(r_x)(WX)$

Where:

FID HC=Concentration of ''hydrocarbon'' plus other organics such as methanol in exhaust as measured by the FID, ppm carbon equivalent.

r_x=FID response to oxygenated species×(methanol, ethanol, or acetaldehyde).

DX=Concentration of oxygenated species×(methanol, ethanol, or acetaldehyde) in exhaust as determined from the dry exhaust sample, ppm carbon (e.g., DCH3OH, 2(DCH3CH2OH)).

WX=Concentration of oxygenated species×(methanol, ethanol, or acetaldehyde) in exhaust as determined from the wet exhaust sample, ppm carbon.

ΣDX=The sum of concentrations DX for all oxygenated species.

ΣWX=The sum of concentrations WX for all oxygenated species.

(*2*) Nonmethane hydrocarbons:

$M_{NMHC\ mode}=(DNMHC)CMW_f(DVol)\ (10^6)/V_m$
$=((DNMHC/10^6)(W_f)/((DCO/10^6)+(DCO_2/100)+(DHC/10^6)))$

$M_{NMHC\ mode}=(WNMHC)CMW_f(WVol)\ (10^6)/V_m$
$=((WNMHC/10^6)(W_f)/((WCO/10^6)+(WCO_2/100)+(WHC/10^6)))$

Where:

$DNMHC=FID\ HC-(r_{CH4})(DCH4)$
$WNMHC=FID\ HC-(r_{CH4})(WCH4)$

FID HC=Concentration of ''hydrocarbon'' plus other organics such as methane in exhaust as measured by the FID, ppm carbon equivalent.

r_{CH4}=FID response to methane.

DCH4=Concentration of methane in exhaust as determined from the dry exhaust sample, ppm.

WCH4=Concentration of methane in exhaust as determined from the wet exhaust sample, ppm.

(B) Carbon monoxide:

$M_{CO\ mode}=(DCO)MW_{CO}(DVol)/10^6/V_m$
$=((MW_{CO}(DCO/10^6)(W_f)/((CMW_f)(DCO/10^6)+(DCO_2/100)+DHC/10^6)+(\Sigma DX/10^6)))$

$M_{CO\ mode}=(WCO)MW_{CO}(DVol)(10^6)/V_m$
$+((MW_{CO}(WCO/10^6)(W_f)/((CMW_f)(WCO/10^6)+(WCO_2/100)+WHC/10^6)+(\Sigma WX/10^6)))$

(C) Oxides of nitrogen:

$M_{NOx\ mode}=(DNOX)MW_{NO2}(DVol)(10^6)/V_m$
$=((MW_{NO2}(DNOX/10^6)(W_f)/((CMW_f)(DCO/10^6)+(DCO_2/100)+(DHC/10^6)+(\Sigma DX/10^6)))$

$M_{NOx\ mode}=(WNOX)MW_{NO2}(DVol)(10^6)/V_m$
$=((MW_{NO2}(WNOX/10^6)(W_f)/((CMW_f)(WCO/10^6)+(WCO_2/100)+(WHC/10^6)+(\Sigma WX/10^6)))$

(D) Methanol:

$M_{CH3OH\ mode}=(DCH3OH/10^6)32.042(DVol)/V_m$

$M_{CH3OH\ mode}=(WCH3OH/10^6)32.042(WVol)/V_m$

Where:

$DCH3OH=(V_m)(10^6)[(C_1\times AV_1)+(C_2\times AV_2)]/DVol_{MS}$.

$WCH3OH=(V_m)(10^6)[(C_1\times AV_1)+(C_2\times AV_2)]/WVol_{MS}$.

C_i=concentration of methanol in impinger i (1 or 2) in mol/ml.

AV_i=Volume of absorbing reagent in impinger i (1 or 2) in ml.

$DVol_{MS}$=Volume (standard ft^3) of exhaust sample drawn through methanol impingers (dry).

$WVol_{MS}$=Volume (standard ft^3) of exhaust sample drawn through methanol impingers (wet).

(E) Ethanol:

$M_{CH3CH2OH\ mode}=(DCH3CH2OH/10^6)23.035(DVol)/V_m$

$M_{CH3CH2OH\ mode}=(WCH3CH2OH/10^6)23.035(WVol)/V_m$

Where:

$DCH3CH2OH=(V_m)(10^6)[(C_1\times AV_1)+(C_2\times AV_2)]/DVol_{ES}$.

$WCH3CH2OH=(V_m)(10^6)[(C_1\times AV_1)+(C_2\times AV_2)]/WVol_{ES}$.

C_i=concentration of ethanol in impinger i (1 or 2) in mol/ml.

AV_i=Volume of absorbing reagent in impinger i (1 or 2) in ml.

$DVol_{ES}$=Volume (standard ft^3) of exhaust sample drawn through ethanol impingers (dry).

$WVol_{ES}$=Volume (standard ft^3) of exhaust sample drawn through ethanol impingers (wet).

(F) Formaldehyde:

$M_{CH2O\ mode}=(DCH2O/10^6)30.026(DVol)/V_m$
$M_{CH2O\ mode}=(WCH2O/10^6)30.026(WVol)/V_m$

(*1*) If aldehydes are measured using impingers:

$DCH2O=(V_m)(10^6)[(C_1\times AV_1)+(C_2\times AV_2)]/DVol_{FS}$

$WCH2O=(V_m)(10^6)[(C_1\times AV_1)+(C_2\times AV_2)]/WVol_{FS}$

(*2*) If aldehydes are measured using cartridges:

$DCH2O=(V_m)(10^6)(C_R \times AV_R)/DVol_{FS}$

$WCH2O=(V_m)(10^6)(C_R \times AV_R)/WVol_{FS}$

(*3*) The following definitions apply to this paragraph (b)(2)(iii)(F):

AV_i=Volume of absorbing reagent in impinger i (1 or 2) in ml.
AV_R=Volume of absorbing reagent use to rinse the cartridge in ml.
C_i=concentration of formaldehyde in impinger i (1 or 2) in mol/ml.
C_R=concentration of formaldehyde in solvent rinse in mol/ml.
$DVol_{FS}$=Volume (standard ft^3) of exhaust sample drawn through formaldehyde sampling system (dry).
$WVol_{FS}$=Volume (standard ft^3) of exhaust sample drawn through formaldehyde sampling system (wet).

(G) Acetaldehyde:

$M_{CH3CHO\ mode}=(DCH3CHO/10^6)27.027(DVol)/V_m$
$M_{CH3CHO\ mode}=(WCH3CHO/10^6)27.027(WVol)/V_m$

(*1*) If aldehydes are measured using impingers:

$DCH3CHO=(V_m)(10^6)[(C_1 \times AV_1)+(C_2 \times AV_2)]/DVol_{AS}$
$WCH3CHO=(V_m)(10^6)[(C_1 \times AV_1)+C_2 \times AV_2)]/WVol_{AS}$

(*2*) If aldehydes are measured using cartridges:

$DCH3CHO=(V_m)(10^6)(C_R \times AV_R)/DVol_{AS}$
$WCH3CHO=(V_m)(10^6)(C_R \times AV_R)/WVol_{AS}$

(*3*) The following definitions apply to this paragraph (b)(2)(iii)(G):

AV_i=Volume of absorbing reagent in impinger i (1 or 2) in ml.
AV_R=Volume of absorbing reagent use to rinse the cartridge in ml.
C_i=concentration of acetaldehyde in impinger i (1 or 2) in mol/ml.
C_R=concentration of acetaldehyde in solvent rinse in mol/ml.
$DVol_{AS}$=Volume (standard ft^3) of exhaust sample drawn through acetaldehyde sampling system (dry).
$WVol_{AS}$=Volume (standard ft^3) of exhaust sample drawn through acetaldehyde sampling system (wet).

(iv) Conversion of wet concentrations to dry concentrations. Wet concentrations are converted to dry concentrations using the following equation:

$DX=K_W\ WX$

Where:

WX is the concentration of species X on a wet basis.
DX is the concentration of species X on a dry basis.
K_W is a conversion factor=WVol/DVol=1+DH2O.

(A) Iterative calculation of conversion factor. The conversion factor K_W is calculated from the fractional volume of water in the exhaust on a dry basis (DH2O=volume of water in exhaust/dry volume of exhaust). Precise calculation of the conversion factor K_W must be done by iteration, since it requires the dry concentration of HC, but HC emissions are measured wet.

(*1*) The conversion factor is calculated by first assuming DHC=WHC to calculate DVol:

$DVol=(V_m)(W_f)/((CMW_f)(DHC/10^6+DCO/10^6+DCO2/100))$

(*2*) This estimate is then used in the following equations to calculate $DVol_{air}$, then DH2O, then K_W, which allows DHC to be determined more accurately from WHC:

$$DH2O=\left[\frac{\alpha\left(\frac{DCO2}{10^2}+\frac{DCO}{10^6}\right)}{2}+\frac{(Y)(DVol_{air})}{DVol}\right]\left[\frac{1}{1+\frac{DCO}{(DCO2)(K)(10^4)}}\right]$$

Where:

Y=Water volume concentration in intake air, volume fraction (dry).
$DVol_{air}$=Air intake flow rate (ft^3/hr) on a dry basis, measured, or calculated as:

$$DVol_{air} = DVol\left[1-\left(\frac{DCO2}{10^2}\right)\left(\frac{\alpha}{4}\right)-\frac{DCO}{10^6}\left(\frac{\alpha}{4}+0.5\right)\right]$$

(*3*) The calculations are repeated using this estimate of DHC. If the new estimate for K_W is not within one percent of the previous estimate, the iteration is repeated until the difference in K_W between iterations is less than one percent.

(B) Alternate calculation of DH2O (approximation). The following approximation may be used for DH2O instead of the calculation in paragraph (b)(2)(iv)(A) of this section:

$$DH2O = \left[\frac{\alpha\left(\frac{DCO2}{10^2}+\frac{DCO}{10^6}\right)}{2}+(Y)\left(DVol_{Ratio}\right)\right]\left[\frac{1}{1+\frac{DCO}{(DCO2)(K)(10^4)}}\right]$$

Where:

$$DVol_{ratio} = \frac{DVol_{air}}{DVol} = \left[1-\left(\frac{DCO2}{10^2}\right)\left(\frac{\alpha}{4}\right)-\frac{DCO}{10^6}\left(\frac{\alpha}{4}+0.5\right)\right]$$

Y=Water volume concentration in intake air, volume fraction (dry).

(3) *Mass Emissions—Dilute exhaust measurements.* For dilute exhaust measurements mass emissions (grams per hour) of each species for each mode:

(i) *General equations.* The mass emission rate, $M_{x\ mode}$ (g/hr) of each pollutant (HC, NO_X. CO2, CO, CH4 CH3OH, CH3CH2OH, CH2O, CH3CH2O) for each operating mode for bag measurements and diesel continuously heated sampling system measurements is determined from the following equation:

$M_{x\ mode}=(V_{mix})(Density_x)(X_{conc})/(V_f)$

Where:

x designates the pollutant (e.g., HC), V_{mix} is the total diluted exhaust volumetric flow rate (ft^3/hr), $Density_x$ is the specified density of the pollutant in the gas phase (g/ft^3), X_{conc} is the fractional concentration of pollutant x (i.e., ppm/10^6, ppmC/10^6, or %/100), and V_f is the fraction of the raw exhaust that is diluted for analysis.

(ii) The following abbreviations and equations apply to paragraphs (b)(3)(i) through (b)(3)(iii)(J) of this section:

(A) DF=Dilution factor, which is the volumetric ratio of the dilution air to the raw exhaust sample for total dilution, calculated as:

$$DF = \frac{WCO2 - WCO2_d}{WCO2_e - WCO2_d} - 1$$

Where:

WCO2=Carbon dioxide concentration of the raw exhaust sample, in percent (wet).

$WCO2_e$=Carbon dioxide concentration of the dilute exhaust sample, in percent (wet).

$WCO2_d$=Carbon dioxide concentration of the dilution air, in percent (wet).

(B) V_{mix}=Diluted exhaust volumetric flow rate in cubic feet per hour corrected to standard conditions (528°R, and 760 mm Hg).

(C) V_f=Fraction of the total raw exhaust that is diluted for analysis.

$$=((CO2_{conc}/10^2)+(CO_{conc}/10^6)+(HC_{conc}/10^6))(V_{mix})(CMW_f)/V_m/M_f$$

(iii) Calculation of individual pollutants.

(A) $M_{HC\ mode}$=Hydrocarbon emissions, in grams per hour by mode, are calculated using the following equations:

$$M_{HC\ mode}=(V_{mix})(Density_{HC})(HC_{conc}/10^6)/V_f$$
$$HC_{conc}=HC_e-(HC_d)(1-(1/DF))$$
$$HC_e=FID\ HC_e-\Xi(r_x)(X_e)$$

Where:

$Density_{HC}$=Density of hydrocarbons=16.42 g/ft³ (0.5800 kg/m₃) for #1 petroleum diesel fuel, 16.27 g/ft³ (0.5746 kg/m₃) for #2 diesel, and 16.33 g/ft³ (0.5767 kg/m³) for other fuels, assuming an average carbon to hydrogen ratio of 1:1.93 for #1 petroleum diesel fuel, 1:1.80 for #2 petroleum diesel fuel, and 1:1.85 for hydrocarbons in other fuels at standard conditions.

HC_{conc}=Hydrocarbon concentration of the dilute exhaust sample corrected for background, in ppm carbon equivalent (i.e., equivalent propane×3).

HC_e=Hydrocarbon concentration of the dilute exhaust bag sample, or for diesel continuous heated sampling systems, average hydrocarbon concentration of the dilute exhaust sample as determined from the integrated HC traces, in ppm carbon equivalent. For petroleum-fueled engines, HC_e is the FID measurement. For methanol-fueled and ethanol-fueled engines:

FID HC_e=Concentration of hydrocarbon plus methanol, ethanol and acetaldehyde in dilute exhaust as measured by the FID, ppm carbon equivalent.

r_x=FID response to oxygenated species x (methanol, ethanol or acetaldehyde).

X_e=Concentration of species x (methanol, ethanol or acetaldehyde) in dilute exhaust as determined from the dilute exhaust sample, ppm carbon.

HC_d=Hydrocarbon concentration of the dilution air as measured, in ppm carbon equivalent.

(B) $M_{NOx\ mode}$ = Oxides of nitrogen emissions, in grams per hour by mode, are calculated using the following equations:

$$M_{NOx\ mode}=(V_{mix})\ (Density_{NO2})\ (NOx_{conc}/10^6)\ /V_f$$
$$NOx_{conc}=(NOx_e-NOx_d(1-(1/DF)))$$

Where:

$Density_{NO2}$=Density of oxides of nitrogen is 54.16 g/ft³ (1.913 kg/m³), assuming they are in the form of nitrogen dioxide, at standard conditions.

NOx_{conc}=Oxides of nitrogen concentration of the dilute exhaust sample corrected for background, in ppm.

NOx_e=Oxides of nitrogen concentration of the dilute exhaust bag sample as measured, in ppm.

NOx_d=Oxides of nitrogen concentration of the dilution air as measured, in ppm.

(C) $M_{CO2\ mode}$=Carbon dioxide emissions, in grams per hour by mode, are calculated using the following equations:

$$M_{CO2\ mode}=(V_{mix})\ (Density_{CO2})\ (CO_{2conc}/10^2)\ /V_f$$
$$CO_{2conc}=CO_2.-CO_2.(1-(1/DF))$$

Where:

Density CO_2=Density of carbon dioxide is 51.81 g/ft³ (1.830 kg/m³), at standard conditions.

CO_{2conc}=Carbon dioxide concentration of the dilute exhaust sample corrected for background, in percent.

CO_2.=Carbon dioxide concentration of the dilute exhaust bag sample, in percent.

CO_2.=Carbon dioxide concentration of the dilution air as measured, in percent.

(D)(*1*) $M_{CO\ mode}$=Carbon monoxide emissions, in grams per hour by mode, are calculated using the following equations:

$$M_{CO\ mode}=(V_{mix})(Density_{CO})(CO_{conc}/10^6)/V_f$$
$$CO_{conc}=CO_e-CO_d(1-(1/DF))$$
$$CO_d=(1-0.000323R)CO_{dm}$$

Where:

$Density_{CO}$=Density of carbon monoxide is 32.97 g/ft³ (1.164 kg/m³), at standard conditions.

CO_{conc}=Carbon monoxide concentration of the dilute exhaust sample corrected for background, water vapor, and CO_2 extraction, ppm.

CO_e=Carbon monoxide concentration of the dilute exhaust sample volume corrected for water vapor and carbon dioxide extraction, in ppm.

$CO_e=(1-(0.01+0.005/\alpha)CO_2.-0.000323RH)CO_{em}$, where α is the hydrogen to carbon ratio as measured for the fuel used.

CO_{em}=Carbon monoxide concentration of the dilute exhaust sample as measured, in ppm.

RH = Relative humidity of the dilution air, percent.

CO_d=Carbon monoxide concentration of the dilution air corrected for water vapor extraction, in ppm.

CO_{dm}=Carbon monoxide concentration of the dilution air sample as measured, in ppm.

(*2*) If a CO instrument that meets the criteria specified in 40 CFR part 1065, subpart C, is used without a sample dryer according to 40 CFR 1065.145, CO_{em} must be substituted directly for CO_e and CO_{dm} must be substituted directly for CO_d.

(E) $M_{CH4\ mode}$=Methane emissions corrected for background, in gram per hour by mode, are calculated using the following equations:

$$M_{CH4\ mode}=(V_{mix})\ (Density_{CH4})\ (CH_{4conc}/10^6)/V_f$$

$$CH_{4conc}=C_{CH4e}-C_{CH4d}(1-(1/DF))$$

Where:

$Density_{CH4}$=Density of methane is 18.89 g/ft^3 at 68 °F (20 °C) and 760 mm Hg (101.3kPa) pressure.

CH_{4conc}=Methane concentration of the dilute exhaust corrected for background, in ppm.

C_{CH4e}=Methane concentration in the dilute exhaust, in ppm.

C_{CH4d}=Methane concentration in the dilution air, in ppm.

(F) $M_{CH3OH\ mode}$=Methanol emissions corrected for background, in gram per hour by mode, are calculated using the following equations:

$$M_{CH3OH\ mode}=(V_{mix})(Density_{CH3OH})\ (CH_3OH_{conc}/10^6)/V_f$$

$$CH3OH_{conc}=C_{CH3OHe}-C_{CH3OHd}(1-(1/DF))$$

$$C_{CH3OHe}=((3.817)(10^{-2})(T_{EM})(((C_{S1})(AV_{S1}))+(C_{S2})\ (AV_{S2})))/((P_B)(V_{EM}))$$

$$C_{CH3OHd}=((3.817)(10^{-2})(T_{DM})(((C_{D1})\ (AV_{D1}))+(C_{D2})\ (AV_{D2})))/((P_B)(V_{DM}))$$

Where:

$Density_{CH3OH}$=Density of methanol is 37.71 g/ft^3 (1.332 kg/m^3), at 68 °F (20 °C) and 760 mm Hg (101.3kPa) pressure.

$CH3OH_{conc}$=Methanol concentration of the dilute exhaust corrected for background, in ppm.

C_{CH3OHe}=Methanol concentration in the dilute exhaust, in ppm.

C^{CH3OHd}=Methanol concentration in the dilution air, in ppm.

T_{EM}=Temperature of methanol sample withdrawn from dilute exhaust, °R.

T_{DM}=Temperature of methanol sample withdrawn from dilution air, °R.

P_B=Barometric pressure during test, mm Hg.

V_{EM}=Volume of methanol sample withdrawn from dilute exhaust, ft^3.

V_{DM}=Volume of methanol sample withdrawn from dilution air, ft^3.

C_S=GC concentration of aqueous sample drawn from dilute exhaust, μg/ml.

C_D=GC concentration of aqueous sample drawn from dilution air, μg/ml.

A_{VS}=Volume of absorbing reagent (deionized water) in impinger through which methanol sample from dilute exhaust is drawn, ml.

A_{VD}=Volume of absorbing reagent (deionized water) in impinger through which methanol sample from dilution air is drawn, ml.

$_1$=first impinger.

$_2$=second impinger.

(G) $M_{C2H5OH\ mode}$=Ethanol emissions corrected for background, in gram per hour by mode, are calculated using the following equations:

$$M_{CH3CH2OH\ mode}=(V_{mix})(Density_{CH3CH2OH})\ ((CH_3CH_2OH_{conc}/10^6))/V_f$$

$$CH_3CH_2OH_{conc}=C_{CH3CH2OHe}-C_{CH3CH2OHd}\ (1-(1/DF))$$

$$C_{CH3CH2OHd}=((2.654)(10^{-2})(T_{DM})(((C_{D1})\ (AV_{D1}))+(C_{D2})(AV_{D2})))/((P_B)(V_{DM}))$$

$$C_{CH3CH2OHe}=((2.654)(10^{-2})(T_{EM})(((C_{S1})\ (AV_{S1}))+(C_{S2})(AV_{S2})))/((P_B)(V_{EM}))$$

Where:

$Density_{C2H5OH}$=Density of ethanol is 54.23 g/ft^3 (1.915 kg/m^3), at 68 °F (20 °C) and 760 mm Hg (101.3kPa) pressure.

$CH_3CH_2OH_{conc}$=Ethanol concentration of the dilute exhaust corrected for background, in ppm.

$C_{CH3CH2OHe}$=Ethanol concentration in the dilute exhaust, in ppm.

$C_{CH3CH2OHd}$=Ethanol concentration in the dilution air, in ppm.

T_{EM}= Temperature of ethanol sample withdrawn from dilute exhaust, °R.

T_{DM}=Temperature of ethanol sample withdrawn from dilution air, °R.

P_B=Barometric pressure during test, mm Hg.

V_{EM}=Volume of ethanol sample withdrawn from dilute exhaust, ft^3.

V_{DM}=Volume of ethanol sample withdrawn from dilution air, ft^3.

C_S=GC concentration of aqueous sample drawn from dilute exhaust, μg/ml.

C_D=GC concentration of aqueous sample drawn from dilution air, μg/ml.

A_{VS}= Volume of absorbing reagent (deionized water) in impinger through which ethanol sample from dilute exhaust is drawn, ml.

A_{VD}=Volume of absorbing reagent (deionized water) in impinger through which ethanol sample from dilution air is drawn, ml.

$_1$=first impinger.

$_2$=second impinger.

(H) $M_{CH2O\ mode}$=Formaldehyde emissions corrected for background, in gram per hour by mode, are calculated using the following equations:

$$M_{CH2O\ mode}=(V_{mix})(Density_{CH2O})\ ((CH_2O_{conc}/10^6)/V_f$$

$$CH2O_{conc}=C_{CH2Oe}-C_{CH2Od}(1-(1/DF))$$

$C_{CH2Oe}=((4.069)(10^{-2})(C_{FDE})(V_{AE})(Q)(T_{EF}))/((V_{SE})(P_B)$

$C_{CH2Od}=((4.069)(10^{-2})(C_{FDA})(V_{AA})(Q)(T_{DF}))/(V_{SA})(P_B)$

Where:

$Density_{CH2O}$=Density of formaldehyde is 35.36 g/ft³ (1.249 kg/m³), at 68 °F (20 °C) and 760 mmHg (101.3 kPa) pressure.

$CH2O_{conc}$=Formaldehyde concentration of the dilute exhaust corrected for background, ppm.

C_{CH2Oe}=Formaldehyde concentration in dilute exhaust, ppm.

C_{CH2Od}=Formaldehyde concentration in dilution air, ppm.

C_{FDE}=Concentration of DNPH derivative of formaldehyde from dilute exhaust sample in sampling solution, μg/ml.

V_{AE}=Volume of sampling solution for dilute exhaust formaldehyde sample, ml.

Q = Ratio of molecular weights of formaldehyde to its DNPH derivative = 0.1429.

T_{EF}=Temperature of formaldehyde sample withdrawn from dilute exhaust, °R.

V_{SE}=Volume of formaldehyde sample withdrawn from dilute exhaust, ft³.

P_B=Barometric pressure during test, mm Hg.

C_{FDA}=Concentration of DNPH derivative of formaldehyde from dilution air sample in sampling solution, μg/ml.

V_{AA}=Volume of sampling solution for dilution air formaldehyde sample, ml.

T_{DF}=Temperature of formaldehyde sample withdrawn from dilution air, °R.

V_{SA}=Volume of formaldehyde sample withdrawn from dilution air, ft³.

(I) $M_{CH3CHO\ mode}$=Acetaldehyde emissions corrected for background, in grams per hour by mode, are calculated using the following equations:

$M_{CH3CHO\ mode}=(V_{mix})(Density_{CH3CHO})((CH_3CHO_{conc}/10^6)/V_f$

$CH3CHO_{conc}=C_{CH3CHOe}-C_{CH3CHOd}(1—(1/DF))$

$C_{CH3CHOe}=((2.774)(10^{-2})(C_{ADE})(V_{AE})(Q)(T_{EF}))/((V_{SE})(P_B)$

$C_{CH3CHOd}=((2.774)(10^{-2})(C_{ADA})(V_{AA})(Q)(T_{DF}))/(V_{SA})(P_B)$

Where:

$Density_{CH3CHO}$=Density of acetaldehyde is 51.88 g/ft³ (1.833 kg/m³), at 68 °F (20 °C) and 760 mmHg (101.3 kPa) pressure.

$CH3CHO_{conc}$=Acetaldehyde concentration of the dilute exhaust corrected for background, ppm.

$C_{CH3CHOe}$=Acetaldehyde concentration in dilute exhaust, ppm.

$C_{CH3CHOd}$=Acetaldehyde concentration in dilution air, ppm.

C_{ADE}=Concentration of DNPH derivative of acetaldehyde from dilute exhaust sample in sampling solution, μg/ml.

V_{AE}=Volume of sampling solution for dilute exhaust acetaldehyde sample, ml.

Q=Ratio of molecular weights of acetaldehyde to its DNPH derivative =0.182

T_{EF}=Temperature of acetaldehyde sample withdrawn from dilute exhaust, °R.

V_{SE}=Volume of acetaldehyde sample withdrawn from dilute exhaust, ft³.

P_B=Barometric pressure during test, mm Hg.

C_{ADA}Concentration of DNPH derivative of acetaldehyde from dilution air sample in sampling solution, μg/ml.

V_{AA}=Volume of sampling solution for dilution air acetaldehyde sample, ml.

T_{DF}=Temperature of acetaldehyde sample withdrawn from dilution air, °R.

V_{SA}=Volume of acetaldehyde sample withdrawn from dilution air, ft³.

(J) $M_{NMHC\ mode}$=Nonmethane hydrocarbon emissions, in grams per hour by mode.

$M_{NMHC\ mode}=(V_{mix})(Density_{NMHC})((NMHCE_{conc}/10^6))/V_f$

$NMHC_{conc}=NMHC_e—(NMHC_d)(1-(1/DF))$

$NMHC_e=FID\ HC_e-(r_m)(C_{CH4e})$

$NMHC_d=FID\ HC_d-(r_m)(C_{CH4d})$

Where:

$Density_{NMHC}$=Density of nonmethane hydrocarbons=16.42 g/ft³ (0.5800 kg/m³) for # 1 petroleum diesel fuel, 16.27 g/ft³ (0.5746 kg/m³) for #2 diesel, and 16.33 for other fuels, assuming an average carbon to hydrogen ratio of 1:1.93 for #1 petroleum diesel fuel, 1:1.80 for #2 petroleum diesel fuel, and 1:1.85 for nonmethane hydrocarbons in other fuels at standard conditions.

$NMHC_{conc}$=Nonmethane hydrocarbon concentration of the dilute exhaust sample corrected for background, in ppm carbon equivalent (i.e., equivalent propane × 3).

$NMHC_e$=Nonmethane hydrocarbon concentration of the dilute exhaust bag sample:

FID HC_e=Concentration of hydrocarbons in dilute exhaust as measured by the FID, ppm carbon equivalent.

rm=FID response to methane.

C_{CH4e}=Concentration of methane in dilute exhaust as determined from the dilute exhaust sample.

$NMHC_d$=Nonmethane hydrocarbon concentration of the dilution air:

FID HC_d=Concentration of hydrocarbons in dilute exhaust as measured by the FID, ppm carbon equivalent.

r_m=FID response to methane.

C_{CH4d}=Concentration of methane in dilute exhaust as determined from the dilute exhaust sample, ppm.

(4) *Particulate exhaust emissions.* The mass of particulate for a test mode determined from the following equations when a heat exchanger is used (i.e., no flow compensation), and when background filters are used to correct for background particulate levels:

$M_{PM\ mode}$=Particulate emissions, grams per hour by mode.

$M_{PM\ mode}=(WVol)(PM_{conc})(1+DF)=(V_{mix})(PM_{conc})/V_f$

$PM_{conc}=PM_e-PM_d(1-(1/DF))$

$PM_e=M_{PMe}/V_{sampe}/10^3$

$PM_d=M_{PMd}/V_{sampd}/10^3$

Where:

PM_{conc}=Particulate concentration of the diluted exhaust sample corrected for background, in g/ft^3

M_{PMe}=Measured mass of particulate for the exhaust sample, in mg, which is the difference in filter mass before and after the test.

M_{PMd}=Measured mass of particulate for the dilution air sample, in mg, which is the difference in filter mass before and after the test.

V_{sampe}=Total wet volume of sample removed from the dilution tunnel for the exhaust particulate measurement, cubic feet at standard conditions.

V_{sampd}=Total wet volume of sample removed from the dilution tunnel for the dilution air particulate measurement, cubic feet at standard conditions.

DF=Dilution factor, which is the volumetric ratio of the dilution air to the raw exhaust sample, calculated as:

$$DF=\frac{WCO2-WCO2_d}{WCO2_e-WCO2_d}-1$$

(c) *Humidity calculations.* (1) The following abbreviations (and units) apply to paragraph (b) of this section:

BARO=barometric pressure (Pa).

H=specific humidity, (g H_2O/g of dry air).

K_H=conversion factor=0.6220 g H_2O/g dry air.

M_{air}=Molecular weight of air=28.9645.

M_{H2O}=Molecular weight of water=18.01534.

P_{DB}=Saturation vapor pressure of water at the dry bulb temperature (Pa).

P_{DP}=Saturation vapor pressure of water at the dewpoint temperature (Pa).

P_v=Partial pressure of water vapor (Pa).

P_{WB}=Saturation vapor pressure of water at the wet bulb temperature (Pa).

T_{DB}=Dry bulb temperature (Kelvin).

T_{WB}=Wet bulb temperature (Kelvin).

Y=Water-vapor volume concentration.

(2) The specific humidity on a dry basis of the intake air (H) is defined as:

$H=((K_H)(P_v)/(BARO-P_v))$

(3) The partial pressure of water vapor may be determined using a dew point device. In that case:

$P_v=P_{DP}$

(4) The percent of relative humidity (RH) is defined as:

$RH=(P_v/P_{DB})100$

(5) The water-vapor volume concentration on a dry basis of the engine intake air (Y) is defined as:

$Y=((H)(M_{air})/(M_{H2O})=P_v/(BARO-P_v)$

(d) *NO_X correction factor.* (1) NO_X emission rates ($M_{NOx\ mode}$) shall be adjusted to account for the effects of humidity and temperature by multiplying each emission rate by K_{NOx}, which is calculated from the following equations:

$K_{NOX} = (K)(1 + (0.25(\log K)^2)^{1/2})$

$K = (K_H)(K_T)$

$K_H = [C_1+C_2\exp((-0.0143)(10.714))]/[C_1+C_2\exp((-0.0143)(1000H))]$

$C_1 = -8.7 +164.5\exp(-0.0218(A/F)_{wet})$

$C_2 = 130.7 + 3941\exp(-0.0248(A/F)_{wet})$

Where:

$(A/F)_{wet}$ = Mass of moist air intake divided by mass of fuel intake.

$K_T = 1/[1 - 0.0107(T_{30} - T_A)]$ for tests conducted at ambient temperatures below 30 °C.

K_T = 1.00 for tests conducted at ambient temperatures at or above 30 °C.

T_{30} = The measured intake manifold air temperature in the locomotive when operated at 30 °C (or 100 °C, where intake manifold air temperature is not available).

T_A = The measured intake manifold air temperature in the locomotive as tested (or

the ambient temperature (°C), where intake manifold air temperature is not available).

(e) *Other calculations.* Calculations other than those specified in this section may be used with the advance approval of the Administrator.

[63 FR 18998, Apr. 16, 1998, as amended at 70 FR 40455, July 13, 2005]

§ 92.133 Required information.

(a) The required test data shall be grouped into the following two general categories:

(1) *Pre-test data.* These data are general test data that must be recorded for each test. The data are of a more descriptive nature such as identification of the test engine, test site number, etc. As such, these data can be recorded at any time within 24 hours of the test.

(2) *Test data.* These data are physical test data that must be recorded at the time of testing.

(b) When requested, data shall be supplied in the format specified by the Administrator.

(c) *Pre-test data.* The following shall be recorded, and reported to the Administrator for each test conducted for compliance with the provisions of this part:

(1) Engine family identification (including subfamily identification, such as for aftertreatment systems).

(2) Locomotive and engine identification, including model, manufacturer and/or remanufacturer, and identification number.

(3) Locomotive and engine parameters, including fuel type, recommended oil type, exhaust configuration and sizes, base injection (ignition) timing, operating temperature, advance/retard injection (ignition) timing controls, recommended start-up and warm-up procedures, alternator generator efficiency curve.

(4) Locomotive or engine and instrument operator(s).

(5) Number of hours of operation accumulated on the locomotive or engine prior to beginning the testing.

(6) Dates of most recent calibrations required by §§ 92.115–92.122.

(7) All pertinent instrument information such as tuning (as applicable), gain, serial numbers, detector number, calibration curve number, etc. As long as this information is traceable, it may be summarized by system or analyzer identification numbers.

(8) A description of the exhaust duct and sample probes, including dimensions and locations.

(d) Test data. The physical parameters necessary to compute the test results and ensure accuracy of the results shall be recorded for each test conducted for compliance with the provisions of this part. Additional test data may be recorded at the discretion of the manufacturer or remanufacturer. Extreme details of the test measurements such as analyzer chart deflections will generally not be required on a routine basis to be reported to the Administrator for each test, unless a dispute about the accuracy of the data arises. The following types of data shall be required to be reported to the Administrator. The applicable Application Format for Certification will specify the exact requirements which may change slightly from year to year with the addition or deletion of certain items.

(1) Date and time of day.

(2) Test number.

(3) Engine intake air and test cell (or ambient, as applicable) temperature.

(4) For each test point, the temperature of air entering the engine after compression and cooling in the charge air cooler(s). If testing is not performed on a locomotive, the corresponding temperatures when the engine is in operation in a locomotive at ambient conditions represented by the test.

(5) Barometric pressure. (A central laboratory barometer may be used: Provided, that individual test cell barometric pressures are shown to be within ±0.1 percent of the barometric pressure at the central barometer location.)

(6) Engine intake and test cell dilution air humidity.

(7) Measured horsepower and engine speed for each test mode.

(8) Identification and specifications of test fuel used.

(9) Measured fuel consumption rate at maximum power.

(10) Temperature set point of the heated continuous analysis system components (if applicable).

(11) All measured flow rates, dilution factor, and fraction of exhaust diluted for diluted exhaust measurements (as applicable) for each test mode.

(12) Temperature of the dilute exhaust mixture at the inlet to the respective gas meter(s) or flow instrumentation used for particulate sampling.

(13) The maximum temperature of the dilute exhaust mixture immediately ahead of the particulate filter.

(14) Sample concentrations (background corrected as applicable) for HC, CO, CO_2, and NO_X (and methane, NMHC, alcohols and aldehydes, as applicable) for each test mode. This includes the continuous trace and the steady-state value (or integrated value where required).

(15) The stabilized pre-test weight and post-test weight of each particulate sample and back-up filter or pair of filters.

(16) Brake specific emissions (g/BHP-hr) for HC, CO, NO_X. particulate and, if applicable, CH3, NMHC, THCE, CH_3OH, CH3CH2OH, CH2O and CH3CHO for each test mode.

(17) The weighted brake specific emissions for HC, CO, NO_X and particulate (g/BHP-hr) for the total test for the duty-cycle(s) applicable to the locomotive.

(18) The smoke opacity for each test mode. This includes the continuous trace, the peak values and the steady-state value.

EFFECTIVE DATE NOTE: At 63 FR 19044, Apr. 16, 1998, § 92.133 was added. This section contains information collection and recordkeeping requirements and will not become effective until approval has been given by the Office of Management and Budget.

Subpart C—Certification Provisions

§ 92.201 Applicability.

The requirements of this subpart are applicable to manufacturers and remanufacturers of any locomotives and locomotive engines subject to the provisions of subpart A of this part.

§ 92.202 Definitions.

The definitions of subpart A of this part apply to this subpart.

§ 92.203 Application for certification.

(a) For each engine family that complies with all applicable standards and requirements, the manufacturer or remanufacturer must submit to the Administrator a completed application for a certificate of conformity.

(b) The application must be approved and signed by the authorized representative of the manufacturer or remanufacturer.

(c) The application will be updated and corrected by amendment as provided for in § 92.210 to accurately reflect the manufacturer's or remanufacturer's production.

(d) *Required content.* Each application must include the following information:

(1)(i) A description of the basic engine design including, but not limited to, the engine family specifications, the provisions of which are contained in § 92.204;

(ii)(A) For freshly manufactured locomotives, a description of the basic locomotive design;

(B) For freshly manufactured engines for use in remanufactured locomotives, a description of the locomotive designs in which the engines are to be used;

(C) For remanufactured locomotives, a description of the basic locomotive designs to which the remanufacture system will be applied;

(iii) A list of distinguishable configurations to be included in the engine family;

(2) An explanation of how the emission control system operates, including detailed descriptions of:

(i) All emission control system components;

(ii) Injection or ignition timing for each notch (i.e., degrees before or after top-dead-center), and any functional dependence of such timing on other operational parameters (e.g., engine coolant temperature);

(iii) Each auxiliary emission control device (AECD); and

(iv) All fuel system components to be installed on any production or test locomotive(s) or engine(s);

(3) A description of the test locomotive or engine;

(4) Special or alternate test procedures, if applicable;

(5) A description of the operating cycle and the period of operation necessary to accumulate service hours on the test locomotive or engine and stabilize emission levels;

(6) A description of all adjustable operating parameters (including, but not limited to, injection timing and fuel rate), including the following:

(i) The nominal or recommended setting and the associated production tolerances;

(ii) The intended adjustable range, and the physically adjustable range;

(iii) The limits or stops used to limit adjustable ranges;

(iv) Production tolerances of the limits or stops used to establish each physically adjustable range; and

(v) Information relating to why the physical limits or stops used to establish the physically adjustable range of each parameter, or any other means used to inhibit adjustment, are the most effective means possible of preventing adjustment of parameters to settings outside the manufacturer's or remanufacturer's specified adjustable ranges on in-use engines;

(7) For families participating in the averaging, banking, and trading program, the information specified in subpart D of this part;

(8) Projected U.S. production information for each configuration;

(9) A description of the test equipment and fuel proposed to be used;

(10) All test data obtained by the manufacturer or remanufacturer on each test engine or locomotive;

(11) The intended useful life period for the engine family, in accordance with § 92.9(a);

(12) The intended deterioration factors for the engine family, in accordance with § 92.9(b)(2);

(13) An unconditional statement certifying that all locomotives and engines included the engine family comply with all requirements of this part and the Clean Air Act.

(e) At the Administrator's request, the manufacturer or remanufacturer must supply such additional information as may be required to evaluate the application.

(f)(1) If the manufacturer or remanufacturer, submits some or all of the information specified in paragraph (d) of this section in advance of its full application for certification, the Administrator shall review the information and make the determinations required in § 92.208(d) within 90 days of the manufacturer's or remanufacturer's submittal.

(2) The 90-day decision period is exclusive of any elapsed time during which EPA is waiting for additional information requested from a manufacturer or remanufacturer regarding an adjustable parameter (the 90-day period resumes upon receipt of the manufacturer's or remanufacturer's response). For example, if EPA requests additional information 30 days after the manufacturer or remanufacturer submits information under paragraph (f)(1) of this section, then the Administrator would make a determination within 60 days of the receipt of the requested information from the manufacturer or remanufacturer.

(g)(1) The Administrator may modify the information submission requirements of paragraph (d) of this section, provided that all of the information specified therein is maintained by the manufacturer or remanufacturer as required by § 92.215, and amended, updated, or corrected as necessary.

(2) For the purposes of this paragraph (g), § 92.215 includes all information specified in paragraph (d) of this section whether or not such information is actually submitted to the Administrator for any particular model year.

(3) The Administrator may review a manufacturer's or remanufacturer's records at any time. At the Administrator's discretion, this review may take place either at the manufacturer's or remanufacturer's facility or at another facility designated by the Administrator.

[63 FR 18998, Apr. 16, 1998, as amended at 70 FR 40455, July 13, 2005]

§ 92.204 Designation of engine families.

This section specifies the procedure and requirements for grouping of engines into engine families.

(a) Manufacturers and remanufacturers shall divide their locomotives and locomotive engines into groupings of locomotives and locomotive engines which are expected to have similar emission characteristics throughout

their useful life. Each group shall be defined as a separate engine family. Freshly manufactured locomotives may not be included in the same engine family as remanufactured locomotives. Freshly manufactured engines may be included in the same engine family as remanufactured locomotives, provided such engines are used as replacement engines for locomotive models included in the engine family.

(b) For Tier 1 and Tier 2 locomotives and locomotive engines, the following characteristics distinguish engine families:

(1) The combustion cycle (e.g., diesel cycle);

(2) The type of engine cooling employed (air-cooled or water-cooled), and procedure(s) employed to maintain engine temperature within desired limits (thermostat, on-off radiator fan(s), radiator shutters, etc.);

(3) The bore and stroke dimensions;

(4) The approximate intake and exhaust event timing and duration (valve or port);

(5) The location of the intake and exhaust valves (or ports);

(6) The size of the intake and exhaust valves (or ports);

(7) The overall injection, or as appropriate ignition, timing characteristics (i.e., the deviation of the timing curves from the optimal fuel economy timing curve must be similar in degree);

(8) The combustion chamber configuration and the surface-to-volume ratio of the combustion chamber when the piston is at top dead center position, using nominal combustion chamber dimensions;

(9) The location of the piston rings on the piston;

(10) The method of air aspiration (turbocharged, supercharged, naturally aspirated, Roots blown);

(11) The turbocharger or supercharger general performance characteristics (e.g., approximate boost pressure, approximate response time, approximate size relative to engine displacement);

(12) The type of air inlet cooler (air-to-air, air-to-liquid, approximate degree to which inlet air is cooled);

(13) The intake manifold induction port size and configuration;

(14) The type of fuel and fuel system configuration;

(15) The configuration of the fuel injectors and approximate injection pressure;

(16) The type of fuel injection system controls (i.e., mechanical or electronic);

(17) The type of smoke control system;

(18) The exhaust manifold port size and configuration; and

(19) The type of exhaust aftertreatment system (oxidation catalyst, particulate trap), and characteristics of the aftertreatment system (catalyst loading, converter size vs engine size).

(c) For Tier 0 locomotives and locomotive engines, the following characteristics distinguish engine families:

(1) The combustion cycle (e.g., diesel cycle);

(2) The type of engine cooling employed (air-cooled or water-cooled), and procedure(s) employed to maintain engine temperature within desired limits (thermostat, on-off radiator fan(s), radiator shutters, etc.);

(3) The approximate bore and stroke dimensions;

(4) The approximate location of the intake and exhaust valves (or ports);

(5) The combustion chamber general configuration and the approximate surface-to-volume ratio of the combustion chamber when the piston is at top dead center position, using nominal combustion chamber dimensions;

(6) The method of air aspiration (turbocharged, supercharged, naturally aspirated, Roots blown);

(7) The type of air inlet cooler (air-to-air, air-to-liquid, approximate degree to which inlet air is cooled);

(8) The type of fuel and general fuel system configuration;

(9) The general configuration of the fuel injectors and approximate injection pressure; and

(10) The fuel injection system control type (electronic or mechanical).

(d) Upon request by the manufacturer or remanufacturer, locomotives or locomotive engines that are eligible to be included in the same engine family based on the criteria in paragraph (b) or (c) of this section may be divided

into different engine families. This request must be accompanied by information the manufacturer or remanufacturer believes supports the addition of these different engine families. For the purposes of determining whether an engine family is a small engine family in § 92.603(a)(2), EPA will consider the number of locomotives or locomotive engines that could have been classed together under paragraph (b) or (c) of this section, instead of the number of locomotives or locomotive engines that are included in a subdivision allowed by this paragraph (d).

(e) Upon request by the manufacturer or remanufacturer, the Administrator may allow locomotives or locomotive engines that would be required to be grouped into separate engine families based on the criteria in paragraph (b) or (c) of this section to be grouped into a single engine family if the manufacturer or remanufacturer demonstrates that similar emission characteristics will occur. This request must be accompanied by emission information supporting the appropriateness of such combined engine families.

(f) Remanufactured Tier 2 locomotives may be included in the same engine family as freshly manufactured Tier 2 locomotives, provided such engines are used for locomotive models included in the engine family.

[63 FR 18998, Apr. 16, 1998, as amended at 70 FR 40455, July 13, 2005; 73 FR 37195, June 30, 2008]

§ 92.205 Prohibited controls, adjustable parameters.

(a) Any system installed on, or incorporated in, a new locomotive or new locomotive engine to enable such locomotive or locomotive engine to conform to standards contained in this part:

(1) Shall not in its operation or function cause significant (as determined by the Administrator) emission into the ambient air of any noxious or toxic substance that would not be emitted in the operation of such locomotive, or locomotive engine, without such system, except as specifically permitted by regulation;

(2) Shall not in its operation, function or malfunction result in any unsafe condition endangering the locomotive, its operators, riders or property on a train, or persons or property in close proximity to the locomotive; and

(3) Shall function during all in-use operation except as otherwise allowed by this part.

(b) In specifying the adjustable range of each adjustable parameter on a new locomotive or new locomotive engine, the manufacturer or remanufacturer, shall:

(1) Ensure that safe locomotive operating characteristics are available within that range, as required by section 202(a)(4) of the Clean Air Act, taking into consideration the production tolerances; and

(2) To the maximum extent practicable, limit the physical range of adjustability to that which is necessary for proper operation of the locomotive or locomotive engine.

[63 FR 18998, Apr. 16, 1998, as amended at 70 FR 40455, July 13, 2005]

§ 92.206 Required information.

(a) The manufacturer or remanufacturer shall perform the tests required by the applicable test procedures, and submit to the Administrator the information required by this section: Provided, however, that if requested by the manufacturer or remanufacturer, the Administrator may waive any requirement of this section for testing of locomotives, or locomotive engines, for which the required emission data are otherwise available.

(b) Exhaust emission deterioration factors, with supporting data. The determination of the deterioration factors shall be conducted in accordance with good engineering practice to assure that the locomotives or locomotive engines covered by a certificate issued under § 92.208 will meet the emission standards in § 92.8, in actual use for the useful life of the locomotive or locomotive engine.

(c) Emission data, including exhaust methane data in the case of locomotives or locomotive engines subject to a non-methane hydrocarbon standard, on such locomotives or locomotive engines tested in accordance with applicable test procedures of subpart B of this part. These data shall include zero

hour data, if generated. In lieu of providing the emission data required by paragraph (a) of this section, the Administrator may, upon request of the manufacturer or remanufacturer, allow the manufacturer or remanufacturer to demonstrate (on the basis of previous emission tests, development tests, or other testing information) that the engine or locomotive will conform with the applicable emission standards of § 92.8. The requirement to measure smoke emissions is waived for certification and production line testing of Tier 2 locomotives, except where there is reason to believe the locomotives do not meet the applicable smoke standards.

(d) A statement that the locomotives and locomotive engines, for which certification is requested conform to the requirements in § 92.7, and that the descriptions of tests performed to ascertain compliance with the general standards in § 92.7, and the data derived from such tests, are available to the Administrator upon request.

(e) A statement that the locomotive, or locomotive engine, with respect to which data are submitted to demonstrate compliance with the applicable standards of this subpart, is in all material respects as described in the manufacturer's or remanufacturer's application for certification; that it has been tested in accordance with the applicable test procedures utilizing the fuels and equipment described in the application for certification; and that on the basis of such tests, the engine family conforms to the requirements of this part. If, on the basis of the data supplied and any additional data as required by the Administrator, the Administrator determines that the test locomotive, or test engine, was not as described in the application for certification or was not tested in accordance with the applicable test procedures utilizing the fuels and equipment as described in the application for certification, the Administrator may make the determination that the locomotive, or engine, does not meet the applicable standards. If the Administrator makes such a determination, he/she may withhold, suspend, or revoke the certificate of conformity under § 92.208(c)(3)(i).

[63 FR 18998, Apr. 16, 1998, as amended at 73 FR 37195, June 30, 2008]

§ 92.207 Special test procedures.

(a) *Establishment of special test procedures by EPA.* The Administrator may, on the basis of written application by a manufacturer or remanufacturer, establish special test procedures other than those set forth in this part, for any locomotive or locomotive engine that the Administrator determines is not susceptible to satisfactory testing under the specified test procedures set forth in subpart B of this part.

(b) *Use of alternate test procedures by manufacturer or remanufacturer.* (1) A manufacturer or remanufacturer may elect to use an alternate test procedure provided that it is equivalent to the specified procedures with respect to the demonstration of compliance, its use is approved in advance by the Administrator, and the basis for the equivalence with the specified test procedures is fully described in the manufacturer's or remanufacturer's application.

(2) The Administrator may reject data generated under alternate test procedures which do not correlate with data generated under the specified procedures.

§ 92.208 Certification.

(a) This paragraph (a) applies to manufacturers of new locomotives and new locomotive engines. If, after a review of the application for certification, test reports and data acquired from a freshly manufactured locomotive or locomotive engine or from a development data engine, and any other information required or obtained by EPA, the Administrator determines that the application is complete and that the engine family meets the requirements of the Act and this part, he/she will issue a certificate of conformity with respect to such engine family except as provided by paragraph (c)(3) of this section. The certificate of conformity is valid for each engine family starting with the indicated effective date, but it is not valid for any production after December 31 of the model year for which it is issued (except as specified in § 92.12). The certificate of conformity

is valid upon such terms and conditions as the Administrator deems necessary or appropriate to ensure that the production engines covered by the certificate will meet the requirements of the Act and of this part.

(b) This paragraph (b) applies to remanufacturers of locomotives and locomotive engines. If, after a review of the application for certification, test reports and data acquired from a remanufactured locomotive or locomotive engine or from a development data engine, and any other information required or obtained by EPA, the Administrator determines that the engine family meets the requirements of the Act and of this subpart, he/she will issue a certificate of conformity with respect to such engine family except as provided by paragraph (c)(3) of this section. The certificate of conformity is valid for each engine family from the date of issuance by EPA until 31 December of the model year or calendar year for which it is issued and upon such terms and conditions as the Administrator deems necessary or appropriate to assure that the production locomotives or engines covered by the certificate will meet the requirements of the Act and of this part.

(c) This paragraph (c) applies to manufacturers and remanufacturers of locomotives and locomotive engines.

(1) The manufacturer or remanufacturer shall bear the burden of establishing to the satisfaction of the Administrator that the conditions upon which the certificates were issued were satisfied or excused.

(2) The Administrator will determine whether the test data included in the application represents all locomotives or locomotive engines of the engine family.

(3) Notwithstanding the fact that any locomotive(s) or locomotive engine(s) may comply with other provisions of this subpart, the Administrator may withhold or deny the issuance of any certificate of conformity, or suspend or revoke any such certificate(s) which has (have) been issued with respect to any such locomotive(s) or locomotive engine(s) if:

(i) The manufacturer or remanufacturer submits false or incomplete information in its application for certification thereof;

(ii) The manufacturer or remanufacturer renders inaccurate any test data which it submits pertaining thereto or otherwise circumvents the intent of the Act, or of this part with respect to such locomotive or locomotive engine;

(iii) Any EPA Enforcement Officer is denied access on the terms specified in § 92.215 to any facility or portion thereof which contains any of the following:

(A) A locomotive or locomotive engine which is scheduled to undergo emissions testing, or which is undergoing emissions testing, or which has undergone emissions testing; or

(B) Any components used or considered for use in the construction, modification or buildup of any locomotive or locomotive engine which is scheduled to undergo emissions testing, or which is undergoing emissions testing, or which has undergone emissions testing for purposes of emissions certification; or

(C) Any production locomotive or production locomotive engine which is or will be claimed by the manufacturer or remanufacturer to be covered by the certificate; or

(D) Any step in the construction of a locomotive or locomotive engine, where such step may reasonably be expected to have an effect on emissions; or

(E) Any records, documents, reports or histories required by this part to be kept concerning any of the items listed in paragraphs (c)(3)(iii)(A) through (D).

(iv) Any EPA Enforcement Officer is denied ''reasonable assistance'' (as defined in § 92.215).

(4) In any case in which a manufacturer or remanufacturer knowingly submits false or inaccurate information or knowingly renders inaccurate or invalid any test data or commits any other fraudulent acts and such acts contribute substantially to the Administrator's decision to issue a certificate of conformity, the Administrator may deem such certificate void *ab initio*.

(5) In any case in which certification of a locomotive or locomotive engine is to be withheld, denied, revoked or suspended under paragraph (c)(3) of this

section, and in which the Administrator has presented to the manufacturer or remanufacturer involved reasonable evidence that a violation of § 92.215 in fact occurred, the manufacturer or remanufacturer, if it wishes to contend that, even though the violation occurred, the locomotive or locomotive engine in question was not involved in the violation to a degree that would warrant withholding, denial, revocation or suspension of certification under paragraph (c)(3) of this section, shall have the burden of establishing that contention to the satisfaction of the Administrator.

(6) Any revocation, suspension, or voiding of certification under paragraph (c)(3) of this section shall:

(i) Be made only after the manufacturer or remanufacturer concerned has been offered an opportunity for a hearing conducted in accordance with § 92.216; and

(ii) Extend no further than to forbid the introduction into commerce of locomotives or locomotive engines previously covered by the certification which are still in the hands of the manufacturer or remanufacturer, except in cases of such fraud or other misconduct that makes the certification invalid *ab initio*.

(7) The manufacturer or remanufacturer may request, within 30 days of receiving notification, that any determination made by the Administrator under paragraph (c)(3) of this section to withhold or deny certification be reviewed in a hearing conducted in accordance with § 92.216. The request shall be in writing, signed by an authorized representative of the manufacturer or remanufacturer as applicable, and shall include a statement specifying the manufacturer's or remanufacturer's objections to the Administrator's determinations, and data in support of such objections. If the Administrator finds, after a review of the request and supporting data, that the request raises a substantial factual issue, he/she will grant the request with respect to such issue.

(d) In approving an application for certification, the Administrator may specify:

(1) A broader range of adjustability than recommended by the manufacturer or remanufacturer for those locomotive or engine parameters which are to be subject to adjustment, if the Administrator determines that it will not be practical to keep the parameter adjusted within the recommended range in use;

(2) A longer useful life period, if the Administrator determines that the useful life of the locomotives and locomotive engines in the engine family, as defined in § 92.2, is longer than the period specified by the manufacturer or remanufacturer; and/or

(3) Larger deterioration factors, if the Administrator determines that the deterioration factors specified by the manufacturer or remanufacturer do not meet the requirements of § 92.9(b)(2)(iv).

(e) Within 30 days following receipt of notification of the Administrator's determinations made under paragraph (d) of this section, the manufacturer or remanufacturer may request a hearing on the Administrator's determinations. The request shall be in writing, signed by an authorized representative of the manufacturer or remanufacturer as applicable, and shall include a statement specifying the manufacturer's or remanufacturer's objections to the Administrator's determinations, and data in support of such objections. If, after review of the request and supporting data, the Administrator finds that the request raises a substantial factual issue, the manufacturer or remanufacturer shall be provided with a hearing in accordance with § 92.216 with respect to such issue.

[63 FR 18998, Apr. 16, 1998, as amended at 70 FR 40455, July 13, 2005; 73 FR 37195, June 30, 2008]

§ 92.209 Certification with multiple manufacturers or remanufacturers.

(a) Where there are multiple persons meeting the definition of manufacturer or remanufacturer, each such person must comply with the requirements of this part that apply to manufacturers or remanufacturers. However, if one person complies with a requirement, then all such persons will be deemed to have complied with that specific requirement.

(b) Where more than one entity meets the definition of manufacturer

or remanufacturer for a particular locomotive or locomotive engine, and any one of the manufacturers or remanufacturers obtains a certificate of conformity covering such locomotive or locomotive engine, the requirements of subparts C, D, F, and G of this part shall apply to the manufacturer or remanufacturer that obtains the certificate of conformity. Other manufacturers or remanufacturers are required to comply with the requirements of subparts C, D, F, and G of this part only when notified by the Administrator. Such notification by the Administrator shall specify a reasonable time period in which the manufacturer or remanufacturer shall comply with the requirements identified in the notice.

§ 92.210 Amending the application and certificate of conformity.

(a) The manufacturer or remanufacturer of locomotives or locomotive engines must notify the Administrator when changes to information required to be described in the application for certification are to be made to a product line covered by a certificate of conformity. This notification must include a request to amend the application or the existing certificate of conformity. Except as provided in paragraph (e) of this section, no manufacturer or remanufacturer shall make said changes or produce said locomotives or engines prior to receiving approval from EPA.

(b) A manufacturer's or remanufacturer's request to amend the application or the existing certificate of conformity shall include the following information:

(1) A full description of the change to be made in production, or of the locomotives or engines to be added;

(2) Engineering evaluations or data showing that the locomotives or engines as modified or added will comply with all applicable emission standards; and

(3) A determination whether the manufacturer's or remanufacturer's original test fleet selection is still appropriate, and if the original test fleet selection is determined not to be appropriate, test fleet selection(s) representing the locomotives or engines changed or added which would have been required if the locomotives or engines had been included in the original application for certification.

(c) The Administrator may require the manufacturer or remanufacturer to perform tests on the locomotive or engine representing the locomotive or engine to be added or changed.

(d) *Decision by Administrator*. (1) Based on the description of the amendment and data derived from such testing as the Administrator may require or conduct, the Administrator will determine whether the change or addition would still be covered by the certificate of conformity then in effect.

(2) If the Administrator determines that the change or new locomotive(s) or engine(s) meets the requirements of this part and the Act, the appropriate certificate of conformity shall be amended.

(3) If the Administrator determines that the changed or new locomotive(s) or engine(s) does not meet the requirements of this part and the Act, the certificate of conformity will not be amended. The Administrator shall provide a written explanation to the manufacturer or remanufacturer of the decision not to amend the certificate. The manufacturer or remanufacturer may request a hearing on a denial.

(e) A manufacturer or remanufacturer may make changes in or additions to production locomotives or engines concurrently with the notification to the Administrator as required by paragraph (a) of this section, if the manufacturer or remanufacturer complies with the following requirements:

(1) In addition to the information required in paragraph (b) of this section, the manufacturer or remanufacturer must supply supporting documentation, test data, and engineering evaluations as appropriate to demonstrate that all affected locomotives and engines will still meet applicable emission standards.

(2) If, after a review, the Administrator determines additional testing is required, the manufacturer or remanufacturer must provide required test data within 30 days or cease production of the affected locomotives or engines.

(3) If the Administrator determines that the affected locomotives or engines do not meet applicable requirements, the Administrator will notify

the manufacturer or remanufacturer to cease production of the affected locomotives or engines and to recall and correct at no expense to the owner all affected locomotives or engines previously produced.

(4) Election to produce locomotives or engines under this paragraph will be deemed to be a consent to recall all locomotives or engines which the Administrator determines do not meet applicable standards and to cause such nonconformity to be remedied at no expense to the owner.

[63 FR 18998, Apr. 16, 1998, as amended at 70 FR 40455, July 13, 2005]

§ 92.211 Emission-related maintenance instructions for purchasers.

(a) The manufacturer or remanufacturer shall furnish or cause to be furnished to the ultimate purchaser or owner of each new locomotive, or new locomotive engine, subject to the standards prescribed in § 92.8, written instructions for the proper maintenance and use of the locomotive, or locomotive engine, as are reasonable and necessary to assure the proper functioning of the emissions control system, consistent with the applicable provisions of paragraph (b) of this section.

(1) The maintenance and use instructions required by this section shall be clear and easily understandable.

(2) The maintenance instructions required by this section shall contain a general description of the documentation which would demonstrate that the ultimate purchaser or any subsequent owner had complied with the instructions.

(b)(1) The manufacturer or remanufacturer must provide in boldface type on the first page of the written maintenance instructions notice that maintenance, replacement, or repair of the emission control devices and systems may be performed by any locomotive or locomotive engine repair establishment or individual.

(2) The instructions under paragraph (b)(1) of this section will not include any condition on the ultimate purchaser's or owner's using, in connection with such locomotive or locomotive engine, any component or service (other than a component or service provided without charge under the terms of the purchase agreement) which is identified by brand, trade, or corporate name. Such instructions also will not directly or indirectly distinguish between service performed by any other service establishments with which such manufacturer or remanufacturer has a commercial relationship and service performed by independent locomotive or locomotive engine repair facilities which such manufacturer or remanufacturer has no commercial relationship.

(3) The prohibition of paragraph (b)(2) of this section may be waived by the Administrator if:

(i) The manufacturer or remanufacturer satisfies the Administrator that the locomotive or locomotive engine will function properly only if the component or service so identified is used in connection with such locomotive or locomotive engine; and

(ii) The Administrator finds that such a waiver is in the public interest.

(c) The manufacturer or remanufacturer shall provide to the Administrator, no later than the time of the submission required by § 92.203, a copy of the emission-related maintenance instructions which the manufacturer or remanufacturer proposes to supply to the ultimate purchaser or owner in accordance with this section. The Administrator will review such instructions to determine whether they are reasonable and necessary to assure the proper functioning of the locomotive's, or locomotive engine's emission control systems. If the Administrator determines that such instructions are not reasonable and necessary to assure the proper functioning of the emission control systems, he/she may disapprove the application for certification, or may require that the manufacturer or remanufacturer modify the instructions.

(d) Any revision to the maintenance instructions which will affect emissions shall be supplied to the Administrator at least 30 days before being supplied to the ultimate purchaser or owner unless the Administrator consents to a lesser period of time, and is subject to the provisions of § 92.210.

§ 92.212 Labeling.

(a) *General requirements*. Each new locomotive and new locomotive engine, subject to the emission standards of this part and covered by a certificate of conformity under § 92.208, shall be labeled by the manufacturer or remanufacturer in the manner described in this section at the time of manufacture or remanufacture.

(b) *Locomotive labels*. (1) Locomotive labels meeting the specifications of paragraph (b)(2) of this section shall be applied by:

(i) The manufacturer at the point of original manufacture; and

(ii) The remanufacturer at the point of original remanufacture; and

(iii) Any remanufacturer certifying a locomotive or locomotive engine to an FEL different from the last FEL or standard to which the locomotive was previously certified.

(2)(i) Locomotive labels shall be permanent and legible and shall be affixed to the locomotive in a position in which it will remain readily visible.

(ii) The label shall be attached to a locomotive chassis part necessary for normal operation and not normally requiring replacement during the service life of the locomotive. This label may not be attached to the engine.

(iii) The label shall be affixed by the manufacturer or remanufacturer, in such manner that it cannot be removed without destroying or defacing the label. The label shall not be affixed to any equipment which is easily detached from such locomotive.

(iv) The label may be made up of more than one piece permanently attached to the same locomotive part, except for Tier 0 locomotives, where you may attach it to separate parts.

(v) The label shall contain the following information lettered in the English language in block letters and numerals, which shall be of a color that contrasts with the background of the label:

(A) The label heading: Original Locomotive Emission Control Information. Manufacturers and remanufacturers may add a subheading to distinguish this label from the engine label described in paragraph (c) of this section.

(B) Full corporate name and trademark of the manufacturer or remanufacturer.

(C) Engine family and configuration identification.

(D) A prominent unconditional statement of compliance with U.S. Environmental Protection Agency regulations which apply to locomotives and locomotive engines, as applicable:

(*1*) This locomotive conforms to U.S. EPA regulations applicable to locomotives originally manufactured prior to January 1, 2002; or

(*2*) This locomotive conforms to U.S. EPA regulations applicable to locomotives originally manufactured on or after January 1, 2002, but before January 1, 2005; or

(*3*) This locomotive conforms to U.S. EPA regulations applicable to locomotives originally manufactured on or after January 1, 2005.

(E) Date of locomotive original manufacture.

(F) The useful life of the locomotive.

(G) The standards and/or FELs to which the locomotive was certified.

(c) *Engine labels*. (1) Engine labels meeting the specifications of paragraph (c)(2) of this section shall be applied by:

(i) Every manufacturer at the point of original manufacture; and

(ii) Every remanufacturer at the point of remanufacture.

(2)(i) Engine labels shall be permanent and legible and shall be affixed to the engine in a position in which it will be readily visible after installation of the engine in the locomotive.

(ii) The label shall be attached to an engine part necessary for normal operation and not normally requiring replacement during the useful life of the locomotive.

(iii) The label shall be affixed by the manufacturer or remanufacturer, in such manner that it cannot be removed without destroying or defacing the label. The label shall not be affixed to any equipment which is easily detached from such engine.

(iv) The label may be made up of more than one piece, provided that all pieces are permanently attached to the same engine part.

(v) The label shall contain the following information lettered in the

English language in block letters and numerals, which shall be of a color that contrasts with the background of the label:

(A) The label heading: Engine Emission Control Information. Manufacturers and remanufacturers may add a subheading to distinguish this label from the locomotive label described in paragraph (b) of this section.

(B) Full corporate name and trademark of the manufacturer or remanufacturer.

(C) Engine family and configuration identification.

(D) A prominent unconditional statement of compliance with U.S. Environmental Protection Agency regulations which apply to locomotives and locomotive engines, as applicable:

(*1*) This locomotive and locomotive engine conform to U.S. EPA regulations applicable to locomotives and locomotive engines originally manufactured prior to January 1, 2002; or

(*2*) This locomotive and locomotive engine conform to U.S. EPA regulations applicable to locomotives and locomotive engines originally manufactured on or after January 1, 2002 and before January 1, 2005; or

(*3*) This locomotive and locomotive engine conform to U.S. EPA regulations applicable to locomotives and locomotive engines originally manufactured on or after January 1, 2005.

(E) The useful life of the locomotive or locomotive engine.

(F) The standards and/or FELS to which the locomotive or locomotive engine was certified.

(G) Engine tune-up specifications and adjustments, as recommended by the manufacturer or remanufacturer, in accordance with the applicable emission standards, including but not limited to idle speed(s), injection timing or ignition timing (as applicable), valve lash (as applicable), as well as other parameters deemed necessary by the manufacturer or remanufacturer.

(d) The provisions of this section shall not prevent a manufacturer or remanufacturer from also providing on the label any other information that such manufacturer or remanufacturer deems necessary for, or useful to, the proper operation and satisfactory maintenance of the locomotive or engine.

[63 FR 18998, Apr. 16, 1998, as amended at 70 FR 40456, July 13, 2005; 73 FR 37195, June 30, 2008]

§ 92.213 Submission of locomotive and engine identification numbers.

(a) Upon request of the Administrator, the manufacturer or remanufacturer of any locomotive or locomotive engine covered by a certificate of conformity shall, within 30 days of receipt of such request, identify by locomotive and/or engine identification number, the locomotives or engines covered by the certificate of conformity.

(b) The manufacturer or remanufacturer of any locomotives or locomotive engines covered by a certificate of conformity shall provide to the Administrator, within 60 days of the issuance of a certificate of conformity, an explanation of the elements in any locomotive or engine identification coding system in sufficient detail to enable the Administrator to identify those locomotives or engines which are covered by a certificate of conformity.

EFFECTIVE DATE NOTE: At 63 FR 19051, Apr. 16, 1998, § 92.213 was added. This section contains information collection and recordkeeping requirements and will not become effective until approval has been given by the Office of Management and Budget.

§ 92.214 Production locomotives and engines.

Any manufacturer or remanufacturer obtaining certification under this part shall supply to the Administrator, upon his/her request, a reasonable number of production locomotives or locomotive engines, as specified by the Administrator. The maximum number of locomotives or locomotive engines that may be supplied to the Administrator is five per model year. The locomotives or locomotive engines shall be representative of the engines, emission control systems, and fuel systems offered and typical of production locomotives or engines available for sale, or use by railroads, under the certificate. These locomotives or engines shall be supplied for testing at such time and place and for such reasonable periods as the Administrator may require.

§ 92.215 Maintenance of records; submittal of information; right of entry.

(a) Any manufacturer or remanufacturer subject to any of the standards or procedures prescribed in this subpart shall establish, maintain and retain the following adequately organized and indexed records:

(1) *General records.* The records required to be maintained by this paragraph (a) shall consist of:

(i) Identification and description of all certification locomotives or certification locomotive engines for which testing is required under this subpart.

(ii) A description of all emission control systems which are installed on or incorporated in each certification locomotive or certification locomotive engine.

(iii) A description of all procedures used to test each such certification locomotive or certification locomotive engine.

(iv) A copy of all applications for certification, filed with the Administrator.

(2) *Individual records.* (i) A brief history of each locomotive or locomotive engine used for certification under this subpart including:

(A) In the case where a current production engine is modified for use as a certification engine or in a certification locomotive, a description of the process by which the engine was selected and of the modifications made. In the case where the certification locomotive or the engine for a certification locomotive is not derived from a current production engine, a general description of the buildup of the engine (*e.g.*, whether experimental heads were cast and machined according to supplied drawings). In the cases in the previous two sentences, a description of the origin and selection process for fuel system components, ignition system components, intake-air pressurization and cooling-system components, cylinders, pistons and piston rings, exhaust smoke control system components, and exhaust aftertreatment devices as applicable, shall be included. The required descriptions shall specify the steps taken to assure that the certification locomotive or certification locomotive engine, with respect to its engine, drivetrain, fuel system, emission-control system components, exhaust aftertreatment devices, exhaust smoke control system components or any other devices or components as applicable, that can reasonably be expected to influence exhaust emissions will be representative of production locomotives or locomotive engines and that either: All components and/or locomotive or engine, construction processes, component inspection and selection techniques, and assembly techniques employed in constructing such locomotives or engines are reasonably likely to be implemented for production locomotives or engines; or that they are as close as practicable to planned construction and assembly process.

(B) A complete record of all emission tests performed (except tests performed by EPA directly), including test results, the date and purpose of each test, and the number of miles or megawatt-hours accumulated on the locomotive or the number of megawatt-hours accumulated on the engine.

(C) A record and description of all maintenance and other servicing performed, giving the date of the maintenance or service and the reason for it.

(D) A record and description of each test performed to diagnose engine or emission control system performance, giving the date and time of the test and the reason for it.

(E) A brief description of any significant events affecting the locomotive or engine during the period covered by the history and not described by an entry under one of the previous headings, including such extraordinary events as locomotive accidents or accidents involving the engine or dynamometer runaway.

(ii) Each such history shall be started on the date that the first of any of the selection or buildup activities in paragraph (a)(2)(i)(A) of this section occurred with respect to the certification locomotive or engine and shall be kept in a designated location.

(3) All records, other than routine emission test records, required to be maintained under this subpart shall be retained by the manufacturer or remanufacturer for a period of 8 years

after issuance of all certificates of conformity to which they relate. Routine emission test records shall be retained by the manufacturer or remanufacturer for a period of one (1) year after issuance of all certificates of conformity to which they relate. Records may be retained as hard copy or reduced to computer disks, etc., depending on the record retention procedures of the manufacturer or remanufacturer: *Provided*, that in every case all the information contained in the hard copy shall be retained.

(4) Nothing in this section limits the Administrator's discretion in requiring the manufacturer or remanufacturer to retain additional records or submit information not specifically required by this section.

(5) Pursuant to a request made by the Administrator, the manufacturer or remanufacturer shall submit to him/her the information that is required to be retained.

(6) EPA may void a certificate of conformity *ab initio* for a locomotive or engine family for which the manufacturer or remanufacturer fails to retain the records required in this section or to provide such information to the Administrator upon request.

(b) The manufacturer or remanufacturer of any locomotive or locomotive engine subject to any of the standards prescribed in this part shall submit to the Administrator, at the time of issuance by the manufacturer or remanufacturer, copies of all instructions or explanations regarding the use, repair, adjustment, maintenance, or testing of such locomotive or engine, relevant to the control of crankcase, or exhaust emissions issued by the manufacturer or remanufacturer, for use by other manufacturers or remanufacturers, assembly plants, distributors, dealers, owners and operators. Any material not translated into the English language need not be submitted unless specifically requested by the Administrator.

(c) Any manufacturer or remanufacturer participating in averaging, banking and trading program of subpart D of this part must comply with the maintenance of records requirements of § 92.308.

(d)(1) Any manufacturer or remanufacturer who has applied for certification of a new locomotive or new locomotive engine subject to certification test under this subpart shall admit or cause to be admitted any EPA Enforcement Officer during operating hours on presentation of credentials to any of the following:

(i) Any facility where any such tests or any procedures or activities connected with such test are or were performed;

(ii) Any facility where any locomotive or locomotive engine which is being tested (or was tested, or is to be tested) is present;

(iii) Any facility where any construction process or assembly process used in the modification or buildup of such a locomotive or engine into a certification locomotive or certification engine is taking place or has taken place; or

(iv) Any facility where any record or other document relating to any of the above is located.

(2) Upon admission to any facility referred to in paragraph (d)(1) of this section, any EPA Enforcement Officer shall be allowed:

(i) To inspect and monitor any part or aspect of such procedures, activities and testing facilities including, but not limited to, monitoring locomotive or engine preconditioning, emissions tests, mileage (or service) accumulation, maintenance, and locomotive or engine storage procedures, and to verify correlation or calibration of test equipment;

(ii) To inspect and make copies of any such records, designs, or other documents, including those records specified in Subpart D of this part; and

(iii) To inspect and/or photograph any part or aspect of any such certification locomotive, or certification locomotive engine and any components to be used in the construction thereof.

(3) In order to allow the Administrator to determine whether or not production locomotives, or production locomotive engines, conform to the conditions upon which a certificate of conformity has been issued, or conform in all material respects to the design specifications applicable to those locomotives, or engines, as described in the

application for certification for which a certificate of conformity has been issued, any manufacturer or remanufacturer shall admit any EPA Enforcement Officer on presentation of credentials to:

(i) Any facility where any document, design or procedure relating to the translation of the design and construction of engines and emission related components described in the application for certification or used for certification testing into production locomotives or production engines is located or carried on;

(ii) Any facility where any locomotives or locomotive engines, to be introduced into commerce are manufactured or remanufactured; and

(iii) Any facility where records specified this section are located.

(4) On admission to any such facility referred to in paragraph (d)(3) of this section, any EPA Enforcement Officer shall be allowed:

(i) To inspect and monitor any aspects of such manufacture or remanufacture and other procedures;

(ii) To inspect and make copies of any such records, documents or designs;

(iii) To inspect and photograph any part or aspect of any such locomotive(s) or locomotive engine(s) and any component used in the assembly thereof that are reasonably related to the purpose of his/her entry; and

(iv) To inspect and make copies of any records and documents specified this section.

(5) Any EPA Enforcement Officer shall be furnished by those in charge of a facility being inspected with such reasonable assistance as he/she may request to help him/her discharge any function listed in this part. Each applicant for or recipient of certification is required to cause those in charge of a facility operated for its benefit to furnish such reasonable assistance without charge to EPA whether or not the applicant controls the facility.

(6) The duty to admit or cause to be admitted any EPA Enforcement Officer applies to any facility involved in the manufacturing or assembling of locomotives, remanufacturing systems, or locomotive engines, or the installation of locomotive engines or remanufacturing systems, whether or not the manufacturer or remanufactuer owns or controls the facility in question and applies both to domestic and to foreign manufacturers or remanufacturers and facilities. EPA will not attempt to make any inspections which it has been informed that local law forbids. However, if local law makes it impossible to do what is necessary to insure the accuracy of data generated at a facility, no informed judgment that a locomotive or locomotive engine is certifiable or is covered by a certificate can properly be based on those data. It is the responsibility of the manufacturer or remanufacturer to locate its testing and manufacturing and/or remanufacturing facilities in jurisdictions where this situation will not arise.

(7) For purposes of this section:

(i) ''Presentation of credentials'' shall mean display of the document designating a person as an EPA Enforcement Officer.

(ii) Where locomotive, component or engine storage areas or facilities are concerned, ''operating hours'' shall mean all times during which personnel other than custodial personnel are at work in the vicinity of the area or facility and have access to it.

(iii) Where facilities or areas other than those covered by paragraph (d)(7)(ii) of this section are concerned, ''operating hours'' shall mean all times during which an assembly line is in operation or all times during which testing, maintenance, mileage (or service) accumulation, production or compilation of records, or any other procedure or activity related to certification testing, to translation of designs from the test stage to the production stage, or to locomotive (or engine) manufacture, remanufacture, or assembly is being carried out in a facility.

(iv) ''Reasonable assistance'' includes, but is not limited to, clerical, copying, interpretation and translation services, the making available on request of personnel of the facility being inspected during their working hours to inform the EPA Enforcement Officer of how the facility operates and to answer his questions, and the performance on request of emissions tests on any locomotive (or engine) which is

being, has been, or will be used for certification testing. Such tests shall be nondestructive, but may require appropriate mileage (or service) accumulation. A manufacturer or remanufacturer may be compelled to cause the personal appearance of any employee at such a facility before an EPA Enforcement Officer by written request for his appearance, signed by the Assistant Administrator for Air and Radiation or the Assistant Administrator for Enforcement and Compliance Assurance, served on the manufacturer or remanufacturer. Any such employee who has been instructed by the manufacturer or remanufacturer to appear will be entitled to be accompanied, represented and advised by counsel.

(v) Any entry without 24 hour prior written or oral notification to the affected manufacturer or remanufacturer shall be authorized in writing by the Assistant Administrator for Air and Radiation or the Assistant Administrator for Enforcement and Compliance Assurance.

(8) EPA may void a certificate of conformity ab initio for locomotives or locomotive engines introduced into commerce if the manufacturer or remanufacturer (or contractor for the manufacturer or remanufacturer, if applicable) fails to comply with any provision of this section.

[63 FR 18998, Apr. 16, 1998, as amended at 70 FR 40456, July 13, 2005]

§ 92.216 Hearing procedures.

(a)(1) After granting a request for a hearing under § 92.210 or § 92.208, the Administrator shall designate a Presiding Officer for the hearing.

(2) [Reserved]

(3) The hearing shall be held as soon as practicable at a time and place fixed by the Administrator or by the Presiding Officer.

(4) In the case of any hearing requested pursuant to § 92.208, the Administrator may in his/her discretion direct that all argument and presentation of evidence be concluded within such fixed period not less than 30 days as he/she may establish from the date that the first written offer of a hearing is made to the manufacturer. To expedite proceedings, the Administrator may direct that the decision of the Presiding Officer (who may, but need not be, the Administrator) shall be the final EPA decision.

(b)(1) Upon his/her appointment pursuant to paragraph (a) of this section, the Presiding Officer will establish a hearing file. The file shall consist of the notice issued by the Administrator under § 92.210 or § 92.208 together with any accompanying material, the request for a hearing and the supporting data submitted therewith, and all documents relating to the request for certification and all documents submitted therewith, and correspondence and other data material to the hearing.

(2) The hearing file will be available for inspection by the applicant at the office of the Presiding Officer.

(c) An applicant may appear in person, or may be represented by counsel or by any other duly authorized representative.

(d)(1) The Presiding Officer, upon the request of any party, or in his/her discretion, may arrange for a prehearing conference at a time and place specified by him/her to consider the following:

(i) Simplification of the issues;

(ii) Stipulations, admissions of fact, and the introduction of documents;

(iii) Limitation of the number of expert witnesses;

(iv) Possibility of agreement disposing of all or any of the issues in dispute;

(v) Such other matters as may aid in the disposition of the hearing, including such additional tests as may be agreed upon by the parties.

(2) The results of the conference shall be reduced to writing by the Presiding Officer and made part of the record.

(e)(1) Hearings shall be conducted by the Presiding Officer in an informal but orderly and expeditious manner. The parties may offer oral or written evidence, subject to the exclusion by the Presiding Officer of irrelevant, immaterial and repetitious evidence.

(2) Witnesses will not be required to testify under oath. However, the Presiding Officer shall call to the attention of witnesses that their statements may be subject to the provisions of 18 U.S.C. 1001 which imposes penalties for knowingly making false statements or

representations, or using false documents in any matter within the jurisdiction of any department or agency of the United States.

(3) Any witness may be examined or cross-examined by the Presiding Officer, the parties, or their representatives.

(4) Hearings shall be reported verbatim. Copies of transcripts of proceedings may be purchased by the applicant from the reporter.

(5) All written statements, charts, tabulations, and similar data offered in evidence at the hearings shall, upon a showing satisfactory to the Presiding Officer of their authenticity, relevancy, and materiality, be received in evidence and shall constitute a part of the record.

(6) Oral argument may be permitted in the discretion of the Presiding Officer and shall be reported as part of the record unless otherwise ordered by him/her.

(f)(1) The Presiding Officer shall make an initial decision which shall include written findings and conclusions and the reasons or basis therefor on all the material issues of fact, law, or discretion presented on the record. The findings, conclusions, and written decision shall be provided to the parties and made a part of the record. The initial decision shall become the decision of the Administrator without further proceedings unless there is an appeal to the Administrator or motion for review by the Administrator within 30 days of the date the initial decision was filed.

(2) On appeal from or review of the initial decision the Administrator shall have all the powers which he/she would have in making the initial decision including the discretion to require or allow briefs, oral argument, the taking of additional evidence or the remanding to the Presiding Officer for additional proceedings. The decision by the Administrator shall include written findings and conclusions and the reasons or basis therefor on all the material issues of fact, law, or discretion presented on the appeal or considered in the review.

[63 FR 18998, Apr. 16, 1998, as amended at 70 FR 40456, July 13, 2005]

EFFECTIVE DATE NOTE: At 63 FR 19053, Apr. 16, 1998, § 92.216 was added. This section contains information collection and recordkeeping requirements and will not become effective until approval has been given by the Office of Management and Budget.

Subpart D—Certification Averaging, Banking, and Trading Provisions

§ 92.301 Applicability.

Locomotive engine families subject to the provisions of subpart A of this part are eligible to participate in the certification averaging, banking, and trading program described in this subpart. The provisions of this subpart apply to manufacturers and remanufacturers of new locomotives and new locomotive engines manufactured or remanufactured in the 1999 model year or later.

§ 92.302 Definitions.

The definitions of subpart A of this part apply to this subpart. The following definitions also apply.

Applicable standard means a standard that would have otherwise been applicable had the locomotive or locomotive engine not been certified under this subpart to an FEL different than that standard.

Broker means any entity that facilitates a trade between a buyer and seller.

Buyer means the entity that receives credits as a result of trade or transfer.

Reserved credits means credits that have been generated but have not yet been reviewed by EPA or used to demonstrate compliance under the averaging provisions of this subpart.

Seller means the entity that provides credits during a trade or transfer.

Transfer means to convey control of credits generated from an individual locomotive to the purchaser, owner or operator of the locomotive at the time of manufacture or remanufacture; or to convey control of previously generated credits from the purchaser, owner or operator of an individual locomotive to the manufacturer or remanufacturer at the time of manufacture or remanufacture.

§ 92.303 General provisions.

(a) Participation in the averaging, banking and trading program is voluntary. A manufacturer or remanufacturer may choose to involve some or all of its families in any or all aspects of the program.

(b) An engine family is eligible to participate in the certification averaging, banking, and trading program for NO_X and PM emissions if it is subject to regulation under this part with certain exceptions specified in paragraph (c) of this section. No averaging, banking and trading program is available for meeting the HC, CO, or smoke emission standards of this part.

(c) Locomotives and locomotive engines may not participate in the certification averaging, banking, and trading program if they are exported. Only locomotive and locomotive engines certified under this part are eligible for inclusion in this certification averaging, banking, and trading program.

(d) Averaging involves the generation of credits by a manufacturer or remanufacturer for use by that same manufacturer or remanufacturer in the same calendar year. A manufacturer or remanufacturer may use averaging during certification to offset an emission exceedance of an engine family caused by an FEL above the applicable emission standard, subject to the provisions of this subpart.

(e) Banking involves the generation of credits by a manufacturer or remanufacturer in a given calendar year for use in a subsequent model year. A manufacturer or remanufacturer may bank actual credits only after the end of the calendar year and after EPA has reviewed the manufacturer's or remanufacturer's end-of-year reports. During the calendar year and before submittal of the end-of-year report, credits originally designated in the certification process for banking will be considered reserved and may be redesignated for trading or averaging in the end-of-year report. Credits declared for banking from the previous calendar year that have not been reviewed by EPA may be used in averaging or trading transactions. However, such credits may be revoked at a later time following EPA review of the end-of-year report or any subsequent audit actions.

(f) Trading involves the sale of banked credits for use in certification of new locomotives and new locomotive engines under this part. Only banked credits may be traded; reserved credits may not be traded.

(g) Credit transfer involves the conveying of control over credits, as defined in § 92.302. Transferred credits can be used in averaging or in subsequent transfers. Transferred credits may also be reserved for later banking. Transferred credits may not be traded unless they have been previously banked.

§ 92.304 Compliance requirements.

(a) Manufacturers or remanufacturers wishing to participate in certification averaging, banking and trading programs shall select a FEL for each engine family they wish to include. The level of the FEL shall be selected by the manufacturer or remanufacturer, subject to the upper limits described in paragraph (k) of this section. An engine family certified to an FEL is subject to all provisions specified in this part, except that the applicable FEL replaces the applicable NO_X and PM emission standard for the family participating in the averaging, banking, and trading program.

(b) A manufacturer or remanufacturer may certify one or more engine families at FELs above or below the applicable emission standard, provided the summation of the manufacturer's or remanufacturer's projected balance of all credit transactions in a given calendar year is greater than or equal to zero, as calculated for each family under § 92.305 and reported under § 92.309.

(c) Manufacturers and remanufacturers certifying engine families with FELs exceeding the applicable emission standard shall obtain emission credits in amounts sufficient to address the shortfall. Credits may be obtained from averaging, banking, trading or transfer, subject to the restrictions described in this subpart.

(d) Manufacturers and remanufacturers certifying engine families with FELs below the applicable emission

standard may generate emission credits to average, bank, trade, or transfer, or a combination thereof.

(e) Credits may only be used for certification; they may not be used to remedy a violation of the FEL determined by production line or in-use testing. Credits may be used to allow subsequent production of engines for an engine family failing production line testing if the manufacturer elects to recertify to a higher FEL

(f) If an FEL is changed after initial certification in any given model year, the manufacturer/remanufacturer must conduct production line testing to verify that the emission levels are achieved.

(g) Manufacturers and remanufacturers participating in the averaging, banking and trading program must demonstrate compliance with the applicable emission standards at the end of the model year. Manufacturers and remanufacturers that have certified engine families to FELs above the applicable emission standards and do not have sufficient emission credits to offset the difference between the emission standard and the FEL for such engine family(ies) will be in violation of the conditions of the certificate of conformity for such engine family(ies). The certificates of conformity may be voided *ab initio* for those engine families.

(h) In the event of a negative credit balance resulting from a credit trade or transfer, both the buyer(s) and the seller(s) are liable, except in cases involving fraud. Certificates of all engine families participating in a negative trade may be voided *ab initio*.

(1) Where a buyer of credits is not responsible for causing the negative credit balance, it is only liable to supply additional credits equivalent to any amount of invalid credits that it used.

(2) Credit holders responsible for the credit shortfall may be subject to the requirements of § 92.309(g)(3).

(i) Averaging sets. This subpart includes separate programs for compliance with each type of cycle-weighted standards in § 92.8 (i.e., line-haul and switch). Credits generated over the line-haul duty-cycle may not be used for compliance with the switch duty-cycle, and credits generated over the switch duty-cycle may not be used for compliance with the line-haul duty-cycle.

(j) Cross tier credit exchanges. Cross tier credit exchanges for NO_X and PM emission credits may be exchanged between and among Tier 0, Tier 1, and Tier 2 engine families with the following exceptions:

(1) For 2005 and 2006 model year freshly manufactured locomotives, manufacturers may use PM credits for all of their freshly manufactured engine families. Manufacturers may use NO_X credits only for engine families that are projected to represent 75 percent or less of their total projected annual production of freshly manufactured locomotives. The remainder must comply with the Tier 2 NO_X emission standards without the use of credits.

(2) For 2007 and later model year freshly manufactured locomotives, manufacturers may use PM credits for all of their freshly manufactured engine families. Manufacturers may use NO_X credits only for engine families that are projected to represent 50 percent or less of their total projected annual production of freshly manufactured locomotives. The remainder must comply with the Tier 2 NO_X emission standards without the use of credits.

(3) Credits generated from remanufactured locomotives prior to January 1, 2002 and which are banked may only be used for compliance with the Tier 1 or later emission standards.

(k) Upper limits. The FELs for NO_X and PM for new locomotives and new locomotive engines certified to the Tier 1 and Tier 2 standards may not exceed the following values:

(1) Tier 1: the Tier 0 standards.

(2) Tier 2: the Tier 1 standards, except as noted in paragraph (j) of this section.

(l) Credit life shall be unlimited.

(m) Credits may be generated by any certifying manufacturer or remanufacturer and may be held by any of the following entities:

(1) Locomotive or locomotive engine manufacturers;

(2) Locomotive or locomotive engine remanufacturers;

(3) Locomotive or locomotive engine owners;

(4) Locomotive or locomotive engine operators; or

(5) Other entities after notification to EPA.

(n)(1) All locomotives that are certified to an FEL that is different from the emission standard that would otherwise apply to the locomotive or locomotive engine are required to comply with that FEL for the remainder of their service lives, except as allowed by § 92.8(a)(4)(iii) and this subpart.

(2) Manufacturers shall notify the purchaser of any locomotive engine that is certified to an FEL that is different from the emission standard that would otherwise apply that the locomotive or locomotive engine is required to comply with that FEL for the remainder of its service life.

(3) Remanufacturers shall notify the owner of any locomotive or locomotive engine that is certified to an FEL that is different from the emission standard that would otherwise apply that the locomotive (or the locomotive in which the engine is used) is required to comply with that FEL for the remainder of its service life.

[63 FR 18998, Apr. 16, 1998, as amended at 73 FR 59183, Oct. 8, 2008]

§ 92.305 Credit generation and use calculation.

(a) For each participating engine family, NO_X and PM emission credits (positive or negative) are to be calculated according to the following equation and rounded in accordance with ASTM E29–93a, to the nearest Megagram (Mg). Consistent units are to be used throughout the calculation.

(1) When useful life is expressed in terms of megawatt-hrs:

Credits for each engine family are calculated as: Emission credits=(Std − FEL) × (UL) × (Production) × (Fp) × (10^{-3} kW-Mg/MW-g).

(2) Where:

(i) Std=the applicable locomotive and locomotive engine NO_X and/or PM emission standard in grams per kilowatt-hour (exceptions: Std=0.43 g/kW-hr, for Tier 0 and Tier 1 PM line-haul credits; Std=0.59 g/kW-hr, for Tier 0 and Tier 1 PM switch credits; and Std=previous FEL in g/kW-hr, for locomotives that were certified to an FEL other than the standard during the previous useful life).

(ii) FEL=the family emission limit for the engine family in grams per kilowatt-hour. For Tier 1 and Tier 2 engine families, the FEL may not exceed the limit established in § 92.304(k) for each pollutant.

(iii) UL=the sales weighted average useful life in megawatt-hours, based on the sales weighted average horsepower of the engine family (or the subset of the engine family for which credits are being calculated), as specified in the application for certification.

(iv) Production=the number of locomotives or locomotive engines participating in the averaging, banking, and trading program within the given engine family during the calendar year (or the number of locomotives or locomotive engines in the subset of the engine family for which credits are being calculated). Quarterly production projections are used for initial certification. Actual applicable production/sales volumes are used for end-of-year compliance determination.

(v) F_p=the proration factor as determined in paragraph (c) of this section.

(b) When useful life is expressed in terms of miles or years, the useful life in terms of megawatt hours (UL) shall be calculated by dividing the useful life in miles by 100,000, and multiplying by the sales weighted average horsepower of the engine family. Credits are calculated using this UL value in the equations of paragraph (a) of this section.

(c) The proration factor is an estimate of the fraction of a locomotive's service life that remains as a function of age.

(1) The locomotive's age is the length of time in years from the date of original manufacture to the date at which the remanufacture (for which credits are being calculated) is completed, rounded to the next higher year.

(2) The proration factors for ages 1 through 32 are specified in Table D305–1 of this section. For locomotives or locomotive engines more than 32 years old, the proration factor for 32 year old locomotives shall be used.

(3) For replacement or repower engines, the proration factor is based on

the age of the locomotive chassis, not the age of the engine.

TABLE TO § 92.305

TABLE D305–1—PRORATION FACTOR

Age	F_p	Age	F_p
1	0.964	17	0.452
2	0.929	18	0.429
3	0.893	19	0.405
4	0.857	20	0.381
5	0.821	21	0.357
6	0.786	22	0.333
7	0.750	23	0.310
8	0.714	24	0.286
9	0.679	25	0.268
10	0.643	26	0.250
11	0.607	27	0.232
12	0.571	28	0.214
13	0.548	29	0.196
14	0.524	30	0.179
15	0.500	31	0.161
16	0.476	32	0.143

§ 92.306 Certification.

(a) In the application for certification a manufacturer or remanufacturer must:

(1) Declare its intent to include specific engine families in the averaging, banking, and/or trading programs. Separate declarations are required for each program (line-haul and switch) and for each pollutant (NO_X and PM).

(2) Declare duty-cycle FELs for each engine family participating in certification averaging, banking, and/or trading.

(i) The FELs must be to the same number of significant digits as the emission standard.

(ii) In no case may the FEL exceed the upper limit prescribed in § 92.304(k).

(3) Conduct and submit detailed calculations of projected emission credits (positive or negative) based on quarterly production projections for each participating family and for each pollutant, using the applicable equation in § 92.305 and the applicable values of the terms in the equation for the specific family.

(i) If the engine family is projected to have negative emission credits, state specifically the source (manufacturer/engine family, remanufacturer/engine family, or transfer) of the credits necessary to offset the credit deficit according to quarterly projected production.

(ii) If the engine family is projected to generate credits, state specifically where the quarterly projected credits will be applied (manufacturer/engine family or remanufacturer/engine family, reserved or transfer).

(4) Submit a statement that the locomotives or locomotive engines for which certification is requested will not, to the best of the manufacturer's or remanufacturer's belief, cause the manufacturer or remanufacturer to have a negative credit balance when all credits are calculated for all the manufacturer's or remanufacturer's engine families participating in the averaging, banking, and trading program.

(b) Based on this information, each manufacturer's certification application must demonstrate:

(1) That at the end of model year production, each engine family has a net emissions balance equal to or greater than zero for any pollutant and program for which participation in certification under averaging, banking, and/or trading is being sought. The equation in section § 92.305 shall be used in this calculation for each engine family.

(2) That the manufacturer or remanufacturer will obtain sufficient credits to be used to comply with the emission standard for any engine family with an FEL that exceeds the applicable emission standard, or where credits will be applied if the FEL is less than the emission standard. In cases where credits are being obtained, for each engine family involved the manufacturer or remanufacturer must identify specifically the source of the credits being used (manufacturer/engine family, or remanufacturer/engine family, or transfer). All such reports shall include all credits involved in certification averaging, banking, or trading.

(3) In cases where credits are being generated/supplied, each engine family must indicate specifically the designated use of the credits involved (manufacturer/remanufacturer and engine family, reserved or transfer). All such reports shall include all credits involved in certification averaging, banking, or trading.

(c) Manufacturers and remanufacturers must monitor projected versus actual production throughout the model year to ensure that compliance with

emission standards is achieved at the end of the model year.

(d) At the end of the model year, the manufacturer or remanufacturer must provide the end-of-year reports required under § 92.309.

(1) Projected credits based on the information supplied in the certification application may be used to obtain a certificate of conformity. However, any such projected credits must be validated based on review of the end of model year reports and may be revoked at a later time based on follow-up audits or any other verification measure deemed appropriate by the Administrator.

(2) Compliance for engine families using averaging, banking, or trading will be determined at the end of the model year. Manufacturers and remanufacturers that have certified engine families with credit balances for NO_X and/or PM that do not equal or exceed zero shall be in violation of the conditions of the certificate of conformity for such engine families. The certificate of conformity may be voided *ab initio* for those engine families.

(e) Other conditions of certification.

(1) All certificates issued are conditional upon compliance by the manufacturer or remanufacturer with the provisions of this subpart both during and after the calendar year of production.

(2) Failure to comply with all provisions of this subpart will be considered to be a failure to satisfy the conditions upon which the certificate was issued, and the certificate may be deemed void *ab initio*.

(3) The manufacturer or remanufacturer (as applicable) bears the burden of establishing to the satisfaction of the Administrator that the conditions upon which the certificate was issued were satisfied or waived.

§ 92.307 Labeling.

For all locomotives and locomotive engines included in the certification averaging, banking, and trading program, the FEL to which the locomotive or locomotive engine is certified must be included on the label required in § 92.212. This label must include the notification specified in § 92.304(n).

§ 92.308 Maintenance of records.

(a) The manufacturer or remanufacturer of any locomotive or locomotive engine that is certified under the averaging, banking, and trading program must establish, maintain, and retain the following adequately organized and indexed records for each such locomotive or locomotive engine produced:

(1) EPA engine family and configuration;

(2) Engine identification number;

(3) Engine calendar year and build date;

(4) Rated horsepower;

(5) Purchaser and destination or owner; and

(6) Assembly plant.

(b) The manufacturer or remanufacturer of any engine family that is certified under the averaging, banking, and trading program must establish, maintain, and retain the following adequately organized and indexed records for each such family:

(1) Model year and EPA engine family;

(2) Family Emission Limit (FEL);

(3) Rated horsepower for each configuration;

(4) Projected applicable production/sales volume for the calendar year;

(5) Actual applicable production/sales volume for the calendar year; and

(6) Useful life.

(c) Any manufacturer or remanufacturer producing an engine family participating in trading or transfer of credits must maintain the following records on a quarterly basis for each engine family in the trading program:

(1) The model year and engine family;

(2) The actual quarterly and cumulative applicable production/sales volume;

(3) The values required to calculate credits as given in § 92.305;

(4) The resulting type and number of credits generated/required;

(5) How and where credit surpluses are dispersed; and

(6) How and through what means credit deficits are met.

(d) The manufacturer or remanufacturer must retain all records required to be maintained under this section for a period of 8 years from the due date for the end-of-calendar year report. Records may be retained as hard copy

or reduced to microfilm, ADP diskettes, and so forth, depending on the manufacturer's or remanufacturer's record retention procedure; provided, that in every case all information contained in the hard copy is retained.

(e) Nothing in this section limits the Administrator's discretion in requiring the manufacturer or remanufacturer to retain additional records or submit information not specifically required by this section.

(f) Pursuant to a request made by the Administrator, the manufacturer or remanufacturer must submit to the Administrator the information that the manufacturer or remanufacturer is required to retain.

(g) EPA may void *ab initio* a certificate of conformity for an engine family for which the manufacturer or remanufacturer fails to retain the records required in this section or to provide such information to the Administrator upon request.

EFFECTIVE DATE NOTE: At 63 FR 19056, Apr. 16, 1998, § 92.308 was added. This section contains information collection and recordkeeping requirements and will not become effective until approval has been given by the Office of Management and Budget.

§ 92.309 Reports.

(a) Manufacturer or remanufacturers must submit the certification information as required under § 92.306, and end-of-year reports each year as part of their participation in certification averaging, banking, and trading programs. All entities involved in credit trades or transfers must submit quarterly reports as specified in paragraph (b) of this section.

(b) *Quarterly reports.* (1) Those holding or receiving transferred credits as allowed in § 92.303(m) must submit quarterly reports of their holdings or receipts when credits are gained or lost.

(2) The reports shall include the source or recipient of the credits the amount of credits involved plus remaining balances, details regarding the pollutant, duty-cycle, and model year/Tier as well as the information prescribed in § 92.308(c). Copies of contracts related to credit trading or transfer must be included or supplied by the buyer, seller, and broker, as applicable.

(c) End-of-year reports must include the information prescribed in § 92.308(b). The report shall include a calculation of credit balances for each family to show that the summation of the manufacturer's or remanufacturer's use of credits results in a credit balance equal to or greater than zero. The report shall be consistent in detail with the information submitted under § 92.306 and show how credit surpluses were dispersed and how credit shortfalls were met on a family specific basis. The end-of-year report shall incorporate any information reflected in previous quarterly reports.

(d) The applicable production/sales volume for quarterly and end-of-year reports must be based on the location of either the point of first retail sale by the manufacturer or remanufacturer or the point at which the locomotive is placed into service, whichever occurs first. This is called the final product purchase location.

(e) Each quarterly and end-of-year report submitted shall include a statement certifying to the accuracy and authenticity of the material reported therein.

(f) *Requirements for submission.* (1) Quarterly reports must be submitted within 90 days of the end of the calendar quarter to: Group Manager, Engine Compliance Programs Group, Engine Programs and Compliance Division U.S. Environmental Protection Agency, 6403–J, 1200 Pennsylvania Ave., NW., Washington, DC 20460.

(2) End-of-year reports must be submitted within 120 days of the end of the calendar year to: Group Manager, Engine Compliance Programs Group, Engine Programs and Compliance Division, U.S. Environmental Protection Agency, 6403–J, 1200 Pennsylvania Ave., NW., Washington, DC 20460.

(3) Failure by a manufacturer or a remanufacturer participating in the averaging, banking, or trading program to submit any quarterly or end-of-year reports in the specified time for all engines is a violation of sections 203(a)(1) and 213 of the Clean Air Act for each locomotive or locomotive engine.

(4) A manufacturer or remanufacturer generating credits for banking

only who fails to submit end-of-year reports in the applicable specified time period (120 days after the end of the calendar year) may not use or trade the credits until such reports are received and reviewed by EPA. Use of projected credits pending EPA review is not permitted in these circumstances.

(g) *Reporting errors.* (1) Errors discovered by EPA or the manufacturer or the remanufacturer as applicable in the end-of-year report, including errors in credit calculation, may be corrected 180-days subsequent to submission of the end-of-year report. Errors discovered by EPA after 180-days shall be correctable if, as a result of the correction, the manufacturer's or remanufacturer's credits are reduced. Errors in the manufacturer's or remanufacturer's favor are not corrected if discovered after the 180-day correction period allowed.

(2) If EPA or the manufacturer or remanufacturer determines that a reporting error occurred on an end of year report previously submitted to EPA under this section, the manufacturer's or remanufacturer's credits and credit calculations will be recalculated. Erroneous positive credits will be void. Erroneous negative credit balances may be corrected by EPA.

(3) If EPA review of a manufacturer's or remanufacturers end-of-year report indicates a credit shortfall, the manufacturer or remanufacturer will be permitted to purchase the necessary credits to bring the credit balance to zero. These credits must be supplied at the ratio of 1.1 credits for each 1.0 credit needed. If sufficient credits are not available to bring the credit balance to zero for the family(ies) involved, EPA may void the certificate(s) for that family(ies) *ab initio*. In addition, all locomotives and locomotive engines within an engine family for which there are insufficient credits will be considered to have violated the conditions of the certificate of conformity and therefore not covered by that certificate.

(4) If within 180 days of receipt of the manufacturer's or remanufacturer's end-of-year report, EPA review determines a reporting error in the manufacturer's or remanufacturer's favor (that is, resulting in an increased credit balance) or if the manufacturer or remanufacturer discovers such an error within 180 days of EPA receipt of the end-of-year report, the credits are restored for use by the manufacturer or remanufacturer.

EFFECTIVE DATE NOTE: At 63 FR 19057, Apr. 16, 1998, § 92.309 was added. This section contains information collection and recordkeeping requirements and will not become effective until approval has been given by the Office of Management and Budget.

§ 92.310 Notice of opportunity for hearing.

Any voiding of the certificate under this subpart will be made only after the manufacturer or remanufacturer concerned has been offered an opportunity for a hearing conducted in accordance with § 92.216 and, if a manufacturer or remanufacturer requests such a hearing, will be made only after an initial decision by the Presiding Officer.

Subpart E—Emission-Related Defect Reporting Requirements, Voluntary Emission Recall Program

§ 92.401 Applicability.

The requirements of this subpart are applicable to manufacturers and remanufacturers of locomotives and locomotive engines subject to the provisions of subpart A of this part. The requirement to report emission-related defects affecting a given class or category of locomotives or locomotive engines applies for eight years from the end of the year in which such locomotives or locomotive engines were manufactured, or remanufactured, as applicable.

§ 92.402 Definitions.

The definitions of subpart A of this part apply to this subpart.

§ 92.403 Emission defect information report.

(a) A manufacturer or remanufacturer must file a defect information report whenever it determines, in accordance with procedures it established to

identify either safety-related or performance defects, (or based on other information) that a specific emission-related defect exists in ten or more locomotives or locomotive engines. No report must be filed under this paragraph for any emission-related defect corrected prior to the sale, or reintroduction into service of a remanufactured locomotive or locomotive engine, of the affected locomotives or locomotive engines to an ultimate purchaser.

(b) Defect information reports required under paragraph (a) of this section must be submitted not more than 15 working days after the same emission-related defect is found to affect 10 or more locomotives or locomotive engines. Information required by paragraph (c) of this section that is either not available within 15 working days or is significantly revised must be submitted as it becomes available.

(c) Except as provided in paragraph (b) of this section, each defect report must contain the following information in substantially the format outlined as follows:

(1) The manufacturer's or remanufacturer's corporate name.

(2) A description of the defect.

(3) A description of each class or category of locomotives or locomotive engines potentially affected by the defect including make, model, calendar year produced, purchaser (or owner) and any other information as may be required to identify the locomotives or locomotive engines affected.

(4) For each class or category of locomotives and locomotive engines described in response to paragraph (c)(3) of this section, the following shall also be provided:

(i) The number of locomotives and/or locomotive engines known or estimated to have the defect and an explanation of the means by which this number was determined.

(ii) The address of the plant(s) at which the potentially defective locomotives or locomotive engines were produced.

(5) An evaluation of the emissions impact of the defect and a description of any operational or performance problems which a defective locomotive or locomotive engine might exhibit.

(6) Available emissions data which relate to the defect.

(7) An indication of any anticipated follow-up by the manufacturer or remanufacturer.

[63 FR 18998, Apr. 16, 1998, as amended at 70 FR 40456, July 13, 2005]

§ 92.404 Voluntary emissions recall reporting.

(a) When any manufacturer or remanufacturer initiates a voluntary emissions recall campaign involving a locomotive or locomotive engine, the manufacturer or remanufacturer shall submit to EPA a report describing the manufacturer's or remanufacturer's voluntary emissions recall plan as prescribed by this section within 15 working days of the date owner notification was begun. The report shall contain the following:

(1) A description of each class or category of locomotives or locomotive engines recalled including the number of locomotives or locomotive engines to be recalled, the calendar year if applicable, the make, the model, and such other information as may be required to identify the locomotives or locomotive engines recalled.

(2) A description of the specific modifications, alterations, repairs, corrections, adjustments, or other changes to be made to correct the locomotives or locomotive engines affected by the emission-related defect.

(3) A description of the method by which the manufacturer or remanufacturer will notify locomotive or locomotive engine owners.

(4) A description of the proper maintenance or use, if any, upon which the manufacturer or remanufacturer conditions eligibility for repair under the remedial plan, an explanation of the manufacturer's or remanufacturer's reasons for imposing any such condition, and a description of the proof to be required of a locomotive or locomotive-engine owner to demonstrate compliance with any such condition.

(5) A description of the procedure to be followed by locomotive or locomotive-engine owners to obtain correction of the nonconformity. This shall include designation of the date on or after which the owner can have the

nonconformity remedied, the time reasonably necessary to perform the labor to remedy the defect, and the designation of facilities at which the defect can be remedied.

(6) If some or all the nonconforming locomotives or locomotive engines are to be remedied by persons other than authorized warranty agents of the manufacturer or remanufacturer, a description of the class of persons other than authorized warranty agents of the manufacturer or remanufacturer who will remedy the defect.

(7) A copy of any written notification sent to locomotive or locomotive-engine owners.

(8) A description of the system by which the manufacturer or remanufacturer will assure that an adequate supply of parts will be available to perform the repair under the remedial plan including the date by which an adequate supply of parts will be available to initiate the repair campaign, the percentage of the total parts requirement of each person who is to perform the repair under the remedial plan to be shipped to initiate the campaign, and the method to be used to assure the supply remains both adequate and responsive to owner demand.

(9) Three copies of all necessary instructions to be sent to those persons who are to perform the repair under the remedial plan.

(10) A description of the impact of the changes on fuel consumption, operation or performance, and safety of each class or category of locomotives or locomotive engines to be recalled.

(11) A sample of any label to be applied to locomotives or locomotive engines which participate in the voluntary recall campaign.

(b) Unless otherwise specified by the Administrator, the manufacturer or remanufacturer shall report on the progress of the recall campaign by submitting subsequent reports for six consecutive quarters, or until proven that remedial action has been adequately taken on all affected locomotives or locomotive engines, whichever occurs first, commencing with the quarter after the voluntary emissions recall campaign actually begins. Such reports shall be submitted no later than 25 working days after the close of each calendar quarter. For each class or category of locomotive or locomotive engine subject to the voluntary emissions recall campaign, the quarterly report shall contain the:

(1) Emission recall campaign number, if any, designated by the manufacturer or remanufacturer.

(2) Date owner notification was begun, and date completed.

(3) Number of locomotives or locomotive engines involved in the voluntary emissions recall campaign.

(4) Number of locomotives or locomotive engines known or estimated to be affected by the emission-related defect and an explanation of the means by which this number was determined.

(5) Number of locomotives or locomotive engines inspected pursuant to voluntary emission recall plan.

(6) Number of inspected locomotives or locomotive engines found to be affected by the emissions-related defect.

(7) Number of locomotives or locomotive engines actually receiving repair under the remedial plan.

(8) Number of locomotives or locomotive engines determined to be unavailable for inspection or repair under the remedial plan due to exportation, scrappage, or for other reasons (specify).

(9) Number of locomotives or locomotive engines determined to be ineligible for remedial action due to a failure to properly maintain or use such locomotives or locomotive engines.

(10) Three copies of any service bulletins which relate to the defect to be corrected and which have not previously been reported.

(11) Three copies of all communications transmitted to locomotive or locomotive-engine owners which relate to the defect to be corrected and which have not previously been submitted.

(c) If the manufacturer or remanufacturer determines that any of the information requested in paragraph (b) of this section has changed or was incorrect, revised information and an explanatory note shall be submitted. Answers to paragraphs (b) (5), (6), (7), (8), and (9) of this section shall be cumulative totals.

(d) The manufacturer or remanufacturer shall maintain in a form suitable

for inspection, such as computer information storage devices or card files, the names and addresses of locomotive and locomotive-engine owners:

(1) To whom notification was given;

(2) Who received remedial repair or inspection under the remedial plan; and

(3) Who were determined not to qualify for such remedial action when eligibility is conditioned on proper maintenance or use.

(e) The records described in paragraph (d) of this section shall be made available to the Administrator upon request.

§ 92.405 Alternative report formats.

(a) Any manufacturer or remanufacturer may submit a plan for making either of the reports required by §§ 92.403 and 92.404 on computer diskettes, magnetic tape or other machine readable format. The plan shall be accompanied by sufficient technical detail to allow a determination that data requirements of these sections will be met and that the data in such format will be usable by EPA.

(b) Upon approval by the Administrator of the reporting system, the manufacturer or remanufacturer may use such system until otherwise notified by the Administrator.

§ 92.406 Reports filing: record retention.

(a) The reports required by §§ 92.403 and 92.404 shall be sent to: Group Manager, Engine Compliance Programs Group, Engine Programs and Compliance Division, U.S. Environmental Protection Agency, 6403–J, 1200 Pennsylvania Ave., NW., Washington, DC 20460.

(b) The information gathered by the manufacturer or remanufacturer to compile the reports required by §§ 92.403 and 92.404 shall be retained for not less than 8 years from the date of the manufacture of the locomotives or locomotive engines and shall be made available to duly authorized officials of the EPA upon request.

EFFECTIVE DATE NOTE: At 63 FR 19059, Apr. 16, 1998, § 92.406 was added. This section contains information collection and recordkeeping requirements and will not become effective until approval has been given by the Office of Management and Budget.

§ 92.407 Responsibility under other legal provisions preserved.

The filing of any report under the provisions of this subpart shall not affect a manufacturer's or a remanufacturer's responsibility to file reports or applications, obtain approval, or give notice under any provision of law.

§ 92.408 Disclaimer of production warranty applicability.

(a) The act of filing an Emission Defect Information Report pursuant to § 92.403 is inconclusive as to the existence of a defect subject to the warranty provided by section 207(a) of the Act.

(b) A manufacturer or remanufacturer may include on each page of its Emission Defect Information Report a disclaimer stating that the filing of a Defect Information Report pursuant to these regulations is not conclusive as to the applicability of the Production Warranty provided by section 207(a) of the Act.

Subpart F—Manufacturer and Remanufacturer Production Line Testing and Audit Programs

§ 92.501 Applicability.

The requirements of this subpart are applicable to manufacturers and remanufacturers of locomotives and locomotive engines subject to the provisions of subpart A of this part, except as follows:

(a) The requirements of §§ 92.503, 92.505, 92.506, 92.507, 92.508, and 92.510 only apply to manufacturers of freshly manufactured locomotives or locomotive engines (including those used for repowering). The Administrator may also apply these requirements to remanufacturers of any locomotives or locomotive engines for which there is reason to believe production problems exist that could affect emissions performance. EPA will notify such remanufacturers when it makes a determination that production problems may exist that could affect emissions performance, and the requirements of these sections shall apply as specified in the notice.

(b) The requirements of § 92.511 only apply to remanufacturers of locomotives and locomotive engines.

(c) Manufacturers may comply with the provisions of subpart D of 40 CFR part 1033 instead of the provisions of this subpart F.

[63 FR 18998, Apr. 16, 1998, as amended at 73 FR 37195, June 30, 2008]

§ 92.502 Definitions.

The definitions in subpart A of this part apply to this subpart.

§ 92.503 General Requirements.

(a) Manufacturers (and remanufacturers, where applicable) shall test production line locomotives or locomotive engines using the test procedures specified in § 92.506. The Administrator may require manufacturers and remanufacturers to conduct production line testing on locomotives. If the Administrator determines that locomotive testing is required, he/she shall notify the manufacturer or remanufacturer, and shall specify in such notice the time period in which the manufacturer or remanufacturer shall complete such testing.

(b) Remanufacturers of locomotives and locomotive engines shall conduct audits pursuant to the requirements of § 92.511 to ensure that remanufactured locomotives and locomotive engines comply with the requirements of this part.

(c) Upon request, the Administrator may also allow manufacturers (and remanufacturers, where applicable) to conduct alternate production line testing programs, provided the Administrator determines that the alternate production line testing program provides equivalent assurance that the locomotives and locomotive engines that are being produced conform to the provisions of this part. As part of this allowance or for other reasons, the Administrator may waive some or all of the requirements of this subpart.

[63 FR 18998, Apr. 16, 1998, as amended at 65 FR 73331, Dec. 29, 1999]

§ 92.504 Right of entry and access.

(a) To allow the Administrator to determine whether a manufacturer or remanufacturer is complying with the provisions of this part, one or more EPA enforcement officers may enter during operating hours and upon presentation of credentials any of the following places:

(1) Any facility, including ports of entry, where any locomotive or locomotive engine is to be introduced into commerce or any emission-related component is manufactured, remanufactured, assembled, or stored;

(2) Any facility where any test or audit conducted pursuant to a manufacturer's or remanufacturer's production line testing or auditing program or any procedure or activity connected with such test or audit is or was performed;

(3) Any facility where any test locomotive or locomotive engine is present; and

(4) Any facility where any record required under § 92.509 or other document relating to this subpart is located.

(b) Upon admission to any facility referred to in paragraph (a) of this section, EPA enforcement officers are authorized to perform the following inspection-related activities:

(1) To inspect and monitor any aspect of locomotive or locomotive engine manufacture, remanufacture, assembly, storage, testing and other procedures, and to inspect and monitor the facilities in which these procedures are conducted;

(2) To inspect and monitor any aspect of locomotive or locomotive engine test procedures or activities, including test locomotive or engine selection, preparation and service accumulation, emission test cycles, and maintenance and verification of test equipment calibration;

(3) To inspect and make copies of any records or documents related to the assembly, storage, selection, and testing of a locomotive or locomotive engine; and

(4) To inspect and photograph any part or aspect of any locomotive or locomotive engine and any component used in the assembly thereof that is reasonably related to the purpose of the entry.

(c) EPA enforcement officers are authorized to obtain reasonable assistance without cost from those in charge

of a facility to help the officers perform any function listed in this subpart and they are authorized to request the manufacturer or remanufacturer to make arrangements with those in charge of a facility operated for the manufacturer or remanufacturer's benefit to furnish reasonable assistance without cost to EPA.

(1) Reasonable assistance includes, but is not limited to, clerical, copying, interpretation and translation services; the making available on an EPA enforcement officer's request of personnel of the facility being inspected during their working hours to inform the EPA enforcement officer of how the facility operates and to answer the officer's questions; and the performance on request of emission tests on any locomotive or engine which is being, has been, or will be used for production line testing or auditing.

(2) By written request, signed by the Assistant Administrator for Air and Radiation or the Assistant Administrator for Enforcement and Compliance Assurance, and served on the manufacturer or remanufacturer, a manufacturer or remanufacturer may be compelled to cause the personal appearance of any employee at such a facility before an EPA enforcement officer. Any such employee who has been instructed by the manufacturer or remanufacturer to appear will be entitled to be accompanied, represented, and advised by counsel.

(d) EPA enforcement officers are authorized to seek a warrant or court order authorizing the EPA enforcement officers to conduct the activities authorized in this section, as appropriate, to execute the functions specified in this section. EPA enforcement officers may proceed ex parte to obtain a warrant or court order whether or not the EPA enforcement officers first attempted to seek permission from the manufacturer or remanufacturer or the party in charge of the facility(ies) in question to conduct the activities authorized in this section.

(e) A manufacturer or remanufacturer is responsible for locating its foreign testing, manufacturing, and remanufacturing facilities in jurisdictions where local law does not prohibit an EPA enforcement officer(s) from conducting the activities specified in this section. EPA will not attempt to make any inspections which it has been informed local foreign law prohibits.

EFFECTIVE DATE NOTE: At 63 FR 19060, Apr. 16, 1998, § 92.504 was added. This section contains information collection and recordkeeping requirements and will not become effective until approval has been given by the Office of Management and Budget.

§ 92.505 Sample selection for testing.

(a) At the start of each model year, the manufacturer or remanufacturer will begin to randomly select locomotives or locomotive engines from each engine family for production line testing at a rate of one percent. Each locomotive or locomotive engine will be selected from the end of the production line. Testing shall be performed throughout the entire model year to the extent possible.

(1) The required sample size for an engine family is the lesser of five tests per model year or one percent of projected annual production, with a minimum sample size for an engine family of one test per model year provided that no engine tested fails to meet applicable emission standards.

(2) Manufacturers and remanufacturers may elect to test additional locomotives or locomotive engines. All additional locomotives or locomotive engines must be tested in accordance with the applicable test procedures of this part.

(b) The manufacturer or remanufacturer must assemble the test locomotives or locomotive engines using the same mass production process that will be used for locomotives or locomotive engines to be introduced into commerce.

(c) No quality control, testing, or assembly procedures will be used on any test locomotive or locomotive engine or any portion thereof, including parts and subassemblies, that have not been or will not be used during the production and assembly of all other locomotives or locomotive engines of that family, except with the approval of the Administrator.

§ 92.506 Test procedures.

(a)(1) For locomotives and locomotive engines subject to the provisions of this subpart, the prescribed test procedures are those procedures described in subpart B of this part, except as provided in this section.

(2) The Administrator may, on the basis of a written application by a manufacturer or remanufacturer, prescribe test procedures other than those specified in paragraph (a)(1) of this section for any locomotive or locomotive engine he/she determines is not susceptible to satisfactory testing using procedures specified in paragraph (a)(1) of this section.

(3) If test procedures other than those in subpart B were used in certification of the engine family being tested under this subpart (other than alternate test procedures necessary for testing of a development engine instead of a low mileage locomotive or a low hour engine under § 92.9), the manufacturer or remanufacturer shall use the test procedures used in certification for production line testing.

(b)(1) The manufacturer or remanufacturer may not adjust, repair, prepare, modify, or perform any emission test on, any test locomotive or locomotive engine unless this adjustment, repair, preparation, modification and/or test is documented in the manufacturer's or remanufacturer's locomotive or engine assembly and inspection procedures and is actually performed by the manufacturer or remanufacturer or unless this adjustment, repair, preparation, modification and/or test is required or permitted under this subpart or is approved in advance by the Administrator.

(2) Any adjustable locomotive or locomotive engine parameter must be set to values or positions that are within the range recommended to the ultimate purchaser.

(3) The Administrator may adjust or require to be adjusted any engine parameter which the Administrator has determined to be subject to adjustment for certification and production line testing, to any setting within the specified adjustable range of that parameter, as determined by the Administrator, prior to the performance of any test.

(c) *Service Accumulation/Green Engine factor*. The manufacturer or remanufacturer shall accumulate service on the locomotives and locomotive engines to be tested up to 300 hours of operation. In lieu of conducting such service accumulation, the manufacturer or remanufacturer may establish a Green Engine factor for each regulated pollutant for each engine family to be used in calculating emissions test results. The manufacturer or remanufacturer shall obtain the approval of the Administrator prior to using a Green Engine factor.

(d) The manufacturer or remanufacturer may not perform any maintenance on test locomotives or locomotive engines after selection for testing.

(e) If a locomotive or locomotive engine is shipped to a facility other than the production facility for production line testing, and an adjustment or repair is necessary because of such shipment, the locomotive or locomotive engine manufacturer or remanufacturer must perform the necessary adjustment or repair only after the initial test of the locomotive or locomotive engine, except where the Administrator has determined that the test would be impossible to perform or would permanently damage the locomotive engine.

(f) If a locomotive or locomotive engine cannot complete the service accumulation, if applicable, or an emission test, because of a malfunction, the manufacturer or remanufacturer may request that the Administrator authorize either the repair of that locomotive or locomotive engine or its deletion from the test sequence.

(g) Retesting. (1) If a locomotive or locomotive engine manufacturer or remanufacturer determines that any production line emission test of a locomotive or locomotive engine is invalid, the locomotive or locomotive engine must be retested in accordance with the requirements of this subpart. Emission results from all tests must be reported to EPA, including test results the manufacturer or remanufacturer determines are invalid. The locomotive or locomotive engine manufacturer or

remanufacturer must also include a detailed explanation of the reasons for invalidating any test in the quarterly report required in § 92.508(e). In the event a retest is performed, a request may be made to the Administrator, within ten days of the end of the production quarter, for permission to substitute the after-repair test results for the original test results. The Administrator will either affirm or deny the request by the locomotive or locomotive engine manufacturer or remanufacturer within ten working days from receipt of the request.

[63 FR 18998, Apr. 16, 1998, as amended at 65 FR 73331, Dec. 29, 1999]

§ 92.507 Sequence of testing.

If one or more locomotives or locomotive engines fail a production line test, then the manufacturer or remanufacturer must test two additional locomotives or locomotive engines from the next fifteen produced in that engine family, for each locomotive or locomotive engine that fails.

§ 92.508 Calculation and reporting of test results.

(a) Manufacturers and remanufacturers shall calculate initial test results using the applicable test procedure specified in § 92.506(a). These results must also include the green engine factor, if applicable. The manufacturer or remanufacturer shall round these results, in accordance with ASTM E29–93a (incorporated by reference at § 92.5), to the number of decimal places contained in the applicable emission standard expressed to one additional significant figure.

(b) Final test results shall be calculated by summing the initial test results derived in paragraph (a) of this section for each test locomotive or locomotive engine, dividing by the number of tests conducted on the locomotive or locomotive engine, and rounding in accordance with ASTM E29–93a (incorporated by reference at § 92.5) to the same number of decimal places contained in the applicable standard expressed to one additional significant figure.

(c) Manufacturers and remanufacturers shall calculate the final test results for each test locomotive or locomotive engine by applying the appropriate deterioration factors, derived in the certification process for the engine family, to the final test results, and rounding in accordance with ASTM E 29–93a (incorporated by reference at § 92.5) to the same number of decimal places contained in the applicable standard expressed to one additional significant figure.

(d) If, subsequent to an initial failure of a production line test, the average of the test results for the failed locomotive or locomotive engine and the two additional locomotives or locomotive engines tested, is greater than any applicable emission standard or FEL, the engine family is deemed to be in non-compliance with applicable emission standards, and the manufacturer or remanufacturer must notify EPA within 2 working days of such noncompliance.

(e) Within 45 calendar days of the end of each quarter, each manufacturer or remanufacturer must submit to the Administrator a report which includes the following information:

(1) The location and description of the manufacturer's or remanufacturer's emission test facilities which were utilized to conduct testing reported pursuant to this section;

(2) Total production and sample size for each engine family;

(3) The applicable standards and/or FELs against which each engine family was tested;

(4) A description of the test locomotives or locomotive engines;

(5) For each test conducted:

(i) A description of the test locomotive or locomotive engine, including:

(A) Configuration and engine family identification;

(B) Year, make, and build date;

(C) Engine identification number;

(D) Number of megawatt-hours (or miles if applicable) of service accumulated on locomotive or locomotive engine prior to testing; and

(E) Description of green engine factor; how it is determined and how it is applied;

(ii) Location(s) where service accumulation was conducted and description of accumulation procedure and schedule, if applicable;

(iii) Test number, date, test procedure used, initial test results before and after rounding, and final test results for all production line emission tests conducted, whether valid or invalid, and the reason for invalidation of any test results, if applicable;

(iv) A complete description of any adjustment, modification, repair, preparation, maintenance, and testing which was performed on the test locomotive or locomotive engine, has not been reported pursuant to any other paragraph of this subpart, and will not be performed on other production locomotive or locomotive engines;

(v) Any other information the Administrator may request relevant to the determination whether the new locomotives or locomotive engines being manufactured or remanufactured by the manufacturer or remanufacturer do in fact conform with the regulations with respect to which the certificate of conformity was issued;

(6) For each failed locomotive or locomotive engine as defined in § 92.510(a), a description of the remedy and test results for all retests as required by § 92.512(g);

(7) The date of the end of the locomotive or locomotive engine manufacturer's model year production for each engine family tested; and

(8) The following signed statement and endorsement by an authorized representative of the manufacturer or remanufacturer:

This report is submitted pursuant to Sections 213 and 208 of the Clean Air Act. This production line testing program was conducted in complete conformance with all applicable regulations under 40 CFR part 92. No emission-related changes to production processes or quality control procedures for the engine family tested have been made during this production line testing program that affect locomotives or locomotive engines from the production line. All data and information reported herein is, to the best of (Company Name) knowledge, true and accurate. I am aware of the penalties associated with violations of the Clean Air Act and the regulations thereunder. (Authorized Company Representative.)

[63 FR 18998, Apr. 16, 1998, as amended at 70 FR 40456, July 13, 2005]

§ 92.509 Maintenance of records; submittal of information.

(a) The manufacturer or remanufacturer for any new locomotive or locomotive engine subject to any of the provisions of this subpart must establish, maintain, and retain the following adequately organized and indexed records:

(1) *General records.* A description of all equipment used to test engines in accordance with § 92.503. The equipment requirements in subpart B of this part apply to tests performed under this subpart.

(2) Individual records. These records pertain to each production line test or audit conducted pursuant to this subpart and include:

(i) The date, time, and location of each test or audit;

(ii) The method by which the green engine factor was calculated or the number of hours of service accumulated on the test locomotive or locomotive engine when the test began and ended;

(iii) The names of all supervisory personnel involved in the conduct of the production line test or audit;

(iv) A record and description of any adjustment, repair, preparation or modification performed on test locomotives or locomotive engines, giving the date, associated time, justification, name(s) of the authorizing personnel, and names of all supervisory personnel responsible for the conduct of the action;

(v) If applicable, the date the locomotive or locomotive engine was shipped from the assembly plant, associated storage facility or port facility, and the date the locomotive or locomotive engine was received at the testing facility;

(vi) A complete record of all emission tests or audits performed pursuant to this subpart (except tests performed directly by EPA), including all individual worksheets and/or other documentation relating to each test, or exact copies thereof, in accordance with the record requirements specified in subpart B of this part;

(vii) A brief description of any significant events during testing not otherwise described under this paragraph (a)(2) of this section , commencing with

the test locomotive or locomotive engine selection process and including such extraordinary events as engine damage during shipment.

(3) The manufacturer or remanufacturer must establish, maintain and retain general records, pursuant to paragraph (a)(1) of this section, for each test cell that can be used to perform emission testing under this subpart.

(b) The manufacturer or remanufacturer must retain all records required to be maintained under this subpart for a period of eight (8) years after completion of all testing. Records may be retained as hard copy (i.e., on paper) or reduced to microfilm, floppy disk, or some other method of data storage, depending upon the manufacturer's or remanufacturer's record retention procedure; provided, that in every case, all the information contained in the hard copy is retained.

(c) The manufacturer or remanufacturer must, upon request by the Administrator, submit the following information with regard to locomotive or locomotive engine production:

(1) Projected production for each configuration within each engine family for which certification has been requested and/or approved.

(2) Number of locomotives or engines, by configuration and assembly plant, scheduled for production.

(d) Nothing in this section limits the Administrator's discretion to require a manufacturer or remanufacturer to establish, maintain, retain or submit to EPA information not specified by this section.

(e) All reports, submissions, notifications, and requests for approval made under this subpart must be addressed to: Group Manager, Engine Compliance Programs Group, Engine Programs and Compliance Division 6403-J, U.S. Environmental Protection Agency, 1200 Pennsylvania Ave, NW., Washington, DC 20460.

(f) The manufacturer or remanufacturer must electronically submit the results of its production line testing or auditing using an EPA information format.

§ 92.510 Compliance with criteria for production line testing.

(a) A failed locomotive or locomotive engine is one whose final test results pursuant to § 92.508(c), for one or more of the applicable pollutants, exceed the applicable emission standard or FEL.

(b) An engine family is deemed to be in noncompliance, for purposes of this subpart, if at any time throughout the model year, the average of an initial failed locomotive or locomotive engine and the two additional locomotives or locomotive engines tested, is greater than any applicable emission standard or FEL.

§ 92.511 Remanufactured locomotives: installation audit requirements.

(a) Remanufacturers of locomotives or locomotive engines shall audit the remanufacture of locomotives covered by its certificate(s) of conformity for proper components, component settings and component installations on randomly chosen locomotives in an engine family. Such audits shall be conducted in compliance with the requirements of this section.

(1) The remanufacturer must ensure that all emission related components are properly installed on the locomotive or locomotive engine.

(2) The remanufacturer must ensure that all emission related components are set to the proper specification as indicated in the remanufacture instructions.

(3) Remanufacturers are allowed to submit audits performed by the owners or operators of the locomotives, provided the audits are performed in accordance with the provisions of this section.

(b)(1) The required initial sample size (i.e., the sample size if no failures occur) for each remanufacturer is five percent of the remanufacturer's annual sales per model year per installer, with a maximum number of ten per engine family per installer.

(2) The locomotives audited shall be randomly selected after the remanufacture is complete. The Administrator may allow the locomotives to be selected prior to the completion of the remanufacture, where such preselection would not have the potential to affect the manner in which the

locomotive was remanufactured (e.g., where the installer is not aware of the selection prior to the completion of the remanufacture).

(c) The remanufactured locomotive or locomotive engine may accumulate no more than 10,000 miles prior to an audit.

(d) A failed remanufactured locomotive or locomotive engine is one on which any remanufacture components are found to be improperly installed, improperly adjusted or incorrectly used.

(e) If a remanufactured locomotive or locomotive engine fails an audit, then the remanufacturer must audit two additional locomotives or locomotive engines from the next ten remanufactured in that engine family by that installer.

(f) An engine family is determined to have failed an audit, if at any time during the model year, the remanufacturer determines that the three locomotives audited are found to have had any improperly installed, improperly adjusted or incorrectly used components. The remanufacturer must notify EPA within 2 working days of a determination of an engine family audit failure.

(g) Within 45 calendar days of the end of each quarter, each remanufacturer must submit to the Administrator a report which includes the following information:

(1) The location and description of the remanufacturer's audit facilities which were utilized to conduct auditing reported pursuant to this section;

(2) Total production and sample size for each engine family;

(3) The applicable standards and/or FELs against which each engine family was audited;

(4) For each audit conducted:

(i) A description of the audit locomotive or locomotive engine, including:

(A) Configuration and engine family identification;

(B) Year, make, build date, and remanufacturer date; and

(C) Engine identification number;

(ii) Any other information the Administrator may request relevant to the determination whether the new locomotives or locomotive engines being manufactured or remanufactured by the remanufacturer do in fact conform with the regulations in this part with respect to which the certificate of conformity was issued;

(5) For each failed locomotive or locomotive engine as defined in paragraph (d) of this section, a description of the remedy as required by § 92.512(g);

(6) The following signed statement and endorsement by an authorized representative of the remanufacturer:

This report is submitted pursuant to Sections 213 and 208 of the Clean Air Act. This production line auditing program was conducted in complete conformance with all applicable regulations under 40 CFR part 92. No emission-related changes to production processes or quality control procedures for the engine family audited have been made during this production line auditing program that affect locomotives or locomotive engines from the production line. All data and information reported herein is, to the best of (Company Name) knowledge, true and accurate. I am aware of the penalties associated with violations of the Clean Air Act and the regulations thereunder. (Authorized Company Representative.)

[63 FR 18998, Apr. 16, 1998, as amended at 70 FR 40456, July 13, 2005]

§ 92.512 Suspension and revocation of certificates of conformity.

(a)(1) The certificate of conformity is suspended with respect to any locomotive or locomotive engine that fails a production line test pursuant to § 92.510(a), effective from the time the testing of that locomotive or locomotive engine is completed.

(2) The certificate of conformity is suspended with respect to any locomotive or locomotive engine that fails an audit pursuant to § 92.511(d), effective from the time that auditing of that locomotive or locomotive engine is completed.

(b)(1) The Administrator may suspend the certificate of conformity for an engine family which is in noncompliance pursuant to § 92.510(b), thirty days after the engine family is deemed to be in noncompliance.

(2) The Administrator may suspend the certificate of conformity for an engine family which is determined to have failed an audit pursuant to § 92.511(f). This suspension will not

occur before thirty days after the engine family is deemed to be in noncompliance.

(c) If the results of testing or auditing pursuant to these regulations indicate that locomotives or engines of a particular family produced at one plant of a manufacturer or remanufacturer do not conform to the regulations with respect to which the certificate of conformity was issued, the Administrator may suspend the certificate of conformity with respect to that family for locomotives or locomotive engines manufactured or remanufactured by the manufacturer or remanufacturer at all other plants.

(d) The Administrator may suspend a certificate of conformity for any locomotive or locomotive engine family in whole or in part if:

(1) The manufacturer or remanufacturer fails to comply with any of the requirements of this subpart.

(2) The manufacturer or remanufacturer submits false or incomplete information in any report or information provided to the Administrator under this subpart.

(3) The manufacturer or remanufacturer renders inaccurate any test data submitted under this subpart.

(4) An EPA enforcement officer is denied the opportunity to conduct activities authorized in this subpart.

(5) An EPA enforcement officer is unable to conduct activities authorized in § 92.504 for any reason.

(e) The Administrator shall notify the manufacturer or remanufacturer in writing of any suspension or revocation of a certificate of conformity in whole or in part; a suspension or revocation is effective upon receipt of such notification or thirty days from the time an engine family is deemed to be in noncompliance under §§ 92.508(d), 92.510(a), 92.510(b) or 92.511(f), whichever is earlier, except that the certificate is immediately suspended with respect to any failed locomotives or locomotive engines as provided for in paragraph (a) of this section.

(f) The Administrator may revoke a certificate of conformity for an engine family when the certificate has been suspended pursuant to paragraph (b) or (c) of this section if the remedy is one requiring a design change or changes to the locomotive, engine and/or emission control system as described in the application for certification of the affected engine family.

(g) Once a certificate has been suspended for a failed locomotive or locomotive engine, as provided for in paragraph (a) of this section, the manufacturer or remanufacturer must take the following actions before the certificate is reinstated for that failed locomotive or locomotive engine:

(1) Remedy the nonconformity;

(2) Demonstrate that the locomotive or locomotive engine conforms to applicable standards or family emission limits by retesting, or reauditing if applicable, the locomotive or locomotive engine in accordance with this part; and

(3) Submit a written report to the Administrator, after successful completion of testing, or auditing if applicable, on the failed locomotive or locomotive engine, which contains a description of the remedy and test (or audit) results for each locomotive or engine in addition to other information that may be required by this part.

(h) Once a certificate for a failed engine family has been suspended pursuant to paragraph (b) or (c) of this section, the manufacturer or remanufacturer must take the following actions before the Administrator will consider reinstating the certificate:

(1) Submit a written report to the Administrator which identifies the reason for the noncompliance of the locomotives or locomotive engines, describes the remedy, including a description of any quality control and/or quality assurance measures to be taken by the manufacturer or remanufacturer to prevent future occurrences of the problem, and states the date on which the remedies will be implemented.

(2) Demonstrate that the engine family for which the certificate of conformity has been suspended does in fact comply with the regulations of this part by testing, or auditing if applicable, locomotives or engines selected from normal production runs of that engine family. Such testing (or auditing) must comply with the provisions of this subpart. If the manufacturer or

remanufacturer elects to continue testing, or auditing if applicable, individual locomotives or engines after suspension of a certificate, the certificate is reinstated for any locomotive or engine actually determined to be in conformance with the applicable standards or family emission limits through testing, or auditing if applicable, in accordance with the applicable test procedures, provided that the Administrator has not revoked the certificate pursuant to paragraph (f) of this section.

(i) Once the certificate has been revoked for an engine family, if the manufacturer or remanufacturer desires to continue introduction into commerce of a modified version of that family, the following actions must be taken before the Administrator may issue a certificate for that modified family:

(1) If the Administrator determines that the change(s) in locomotive or engine design may have an effect on emission performance deterioration, the Administrator shall notify the manufacturer or remanufacturer, within five working days after receipt of the report in paragraph (g) of this section, whether subsequent testing or auditing if applicable, under this subpart will be sufficient to evaluate the change or changes or whether additional testing or auditing will be required; and

(2) After implementing the change or changes intended to remedy the nonconformity, the manufacturer or remanufacturer must demonstrate that the modified engine family does in fact conform with the regulations of this part by testing, or auditing if applicable, locomotives or engines selected from normal production runs of that engine family. When both of these requirements are met, the Administrator shall reissue the certificate or issue a new certificate, as the case may be, to include that family. If this subsequent testing, or auditing if applicable, reveals failing data the revocation remains in effect.

(j) At any time subsequent to an initial suspension of a certificate of conformity for a test or audit locomotive or engine pursuant to paragraph (a) of this section, but not later than 30 days (or such other period as may be allowed by the Administrator) after notification of the Administrator's decision to suspend or revoke a certificate of conformity in whole or in part pursuant to paragraphs (b), (c), or (f) of this section, a manufacturer or remanufacturer may request a hearing as to whether the tests or audits have been properly conducted or any sampling methods have been properly applied.

(k) Any suspension of a certificate of conformity under paragraphs (a), (b), (c) and (d) of this section:

(1) Shall be made only after the manufacturer or remanufacturer concerned has been offered an opportunity for a hearing conducted in accordance with §§ 92.513, 92.514, and 92.515 and

(2) Need not apply to locomotives or engines no longer in the possession of the manufacturer or remanufacturer.

(l) After the Administrator suspends or revokes a certificate of conformity pursuant to this section or voids a certificate of conformity under § 92.215, and prior to the commencement of a hearing under § 92.513, if the manufacturer or remanufacturer demonstrates to the Administrator's satisfaction that the decision to suspend, revoke, or void the certificate was based on erroneous information, the Administrator shall reinstate the certificate.

(m) To permit a manufacturer or remanufacturer to avoid storing non-test locomotives or locomotive engines while conducting subsequent testing or auditing of the noncomplying family, a manufacturer or remanufacturer may request that the Administrator conditionally reinstate the certificate for that family. The Administrator may reinstate the certificate subject to the following condition: the manufacturer or remanufacturer must commit to recall all locomotives or locomotive engines of that family produced from the time the certificate is conditionally reinstated if the family fails subsequent testing, or auditing if applicable, and must commit to remedy any nonconformity at no expense to the owner.

[63 FR 18998, Apr. 16, 1998, as amended at 70 FR 40457, July 13, 2005]

§ 92.513 Request for public hearing.

(a) If the manufacturer or remanufacturer disagrees with the Administrator's decision to suspend or revoke a

certificate or disputes the basis for an automatic suspension pursuant to § 92.512(a), the manufacturer or remanufacturer may request a public hearing.

(b) The manufacturer's or remanufacturer's request shall be filed with the Administrator not later than 30 days after the Administrator's notification of his or her decision to suspend or revoke, unless otherwise specified by the Administrator. The manufacturer or remanufacturer shall simultaneously serve two copies of this request upon the Director of the Engine Programs and Compliance Division, Office of Mobile Sources and file two copies with the Hearing Clerk of the Agency. Failure of the manufacturer or remanufacturer to request a hearing within the time provided constitutes a waiver of the right to a hearing. Subsequent to the expiration of the period for requesting a hearing as of right, the Administrator may, in his or her discretion and for good cause shown, grant the manufacturer or remanufacturer a hearing to contest the suspension or revocation.

(c) A manufacturer or remanufacturer shall include in the request for a public hearing:

(1) A statement as to which configuration(s) within a family is to be the subject of the hearing;

(2) A concise statement of the issues to be raised by the manufacturer or remanufacturer at the hearing, except that in the case of the hearing requested under § 92.512(j), the hearing is restricted to the following issues:

(i) Whether tests or audits have been properly conducted (specifically, whether the tests were conducted in accordance with applicable regulations under this part and whether test equipment was properly calibrated and functioning);

(ii) Whether there exists a basis for distinguishing locomotives or locomotive engines produced at plants other than the one from which locomotives or locomotive engines were selected for testing or auditing which would invalidate the Administrator's decision under § 92.512(c));

(3) A statement specifying reasons why the manufacturer or remanufacturer believes it will prevail on the merits of each of the issues raised; and

(4) A summary of the evidence which supports the manufacturer's or remanufacturer's position on each of the issues raised.

(d) A copy of all requests for public hearings will be kept on file in the Office of the Hearing Clerk and will be made available to the public during Agency business hours.

§ 92.514 Administrative procedures for public hearing.

(a) The Presiding Officer shall be an Administrative Law Judge appointed pursuant to 5 U.S.C. 3105 (see also 5 CFR part 930).

(b) The Judicial Officer shall be an officer or employee of the Agency appointed as a Judicial Officer by the Administrator, pursuant to this section, who shall meet the qualifications and perform functions as follows:

(1) *Qualifications.* A Judicial Officer may be a permanent or temporary employee of the Agency who performs other duties for the Agency. The Judicial Officer shall not be employed by the Office of Enforcement or have any connection with the preparation or presentation of evidence for a hearing held pursuant to this subpart. The Judicial Officer shall be a graduate of an accredited law school and a member in good standing of a recognized Bar Association of any state or the District of Columbia.

(2) *Functions.* The Administrator may consult with the Judicial Officer or delegate all or part of the Administrator's authority to act in a given case under this section to a Judicial Officer, provided that this delegation does not preclude the Judicial Officer from referring any motion or case to the Administrator when the Judicial Officer determines such referral to be appropriate.

(c) For the purposes of this section, one or more Judicial Officers may be designated by the Administrator. As work requires, a Judicial Officer may be designated to act for the purposes of a particular case.

(d) *Summary decision.* (1) In the case of a hearing requested under § 92.512(j), when it clearly appears from the data and other information contained in the

request for a hearing that no genuine and substantial question of fact or law exists with respect to the issues specified in § 92.513(c)(2), the Administrator may enter an order denying the request for a hearing and reaffirming the original decision to suspend or revoke a certificate of conformity.

(2) In the case of a hearing requested under § 92.513 to challenge a suspension of a certificate of conformity for the reason(s) specified in § 92.512(d), when it clearly appears from the data and other information contained in the request for the hearing that no genuine and substantial question of fact or law exists with respect to the issue of whether the refusal to comply with this subpart was caused by conditions and circumstances outside the control of the manufacturer or remanufacturer, the Administrator may enter an order denying the request for a hearing and suspending the certificate of conformity.

(3) Any order issued under paragraph (d)(1) or (d)(2) of this section has the force and effect of a final decision of the Administrator, as issued pursuant to § 92.516.

(4) If the Administrator determines that a genuine and substantial question of fact or law does exist with respect to any of the issues referred to in paragraphs (d)(1) and (d)(2) of this section, the Administrator shall grant the request for a hearing and publish a notice of public hearing in the FEDERAL REGISTER or by such other means as the Administrator finds appropriate to provide notice to the public.

(e) *Filing and service.* (1) An original and two copies of all documents or papers required or permitted to be filed pursuant to this section and § 92.513(c) must be filed with the Hearing Clerk of the Agency. Filing is considered timely if mailed, as determined by the postmark, to the Hearing Clerk within the time allowed by this section and § 92.513(b). If filing is to be accomplished by mailing, the documents must be sent to the address set forth in the notice of public hearing referred to in paragraph (d)(4) of this section.

(2) To the maximum extent possible, testimony will be presented in written form. Copies of written testimony will be served upon all parties as soon as practicable prior to the start of the hearing. A certificate of service will be provided on or accompany each document or paper filed with the Hearing Clerk. Documents to be served upon the Director of the Engine Programs and Compliance Division must be sent by registered mail to: Director, Engine Programs and Compliance Division 6403–J, U.S. Environmental Protection Agency, 1200 Pennsylvania Ave., NW., Washington, DC 20460. Service by registered mail is complete upon mailing.

(f) *Computation of time.* (1) In computing any period of time prescribed or allowed by this section, except as otherwise provided, the day of the act or event from which the designated period of time begins to run is not included. Saturdays, Sundays, and federal legal holidays are included in computing the period allowed for the filing of any document or paper, except that when the period expires on a Saturday, Sunday, or federal legal holiday, the period is extended to include the next following business day.

(2) A prescribed period of time within which a party is required or permitted to do an act is computed from the time of service, except that when service is accomplished by mail, three days will be added to the prescribed period.

(g) *Consolidation.* The Administrator or the Presiding Officer in his or her discretion may consolidate two or more proceedings to be held under this section for the purpose of resolving one or more issues whenever it appears that consolidation will expedite or simplify consideration of these issues. Consolidation does not affect the right of any party to raise issues that could have been raised if consolidation had not occurred.

(h) *Hearing date.* To the extent possible hearings under § 92.513 will be scheduled to commence within 14 days of receipt of the request for a hearing.

§ 92.515 Hearing procedures.

The procedures provided in § 86.1014–84(i) through (s) of this chapter apply for hearings requested pursuant to § 92.513 regarding suspension, revocation, or voiding of a certificate of conformity.

§ 92.516 Appeal of hearing decision.

The procedures provided in § 86.1014–84(t) through (aa) of this chapter apply for appeals filed with respect to hearings held pursuant to § 92.515.

§ 92.517 Treatment of confidential information.

Except for information required by § 92.508(e)(2) and quarterly emission test results described in § 92.508(e), information submitted pursuant to this subpart shall be made available to the public by EPA notwithstanding any claim of confidentiality made by the submitter. The provisions for treatment of confidential information described in § 92.4 apply to the information required by § 92.508(e)(2) and all other information submitted pursuant to this subpart.

Subpart G—In-Use Testing Program

§ 92.601 Applicability.

The requirements of this subpart are applicable to all manufacturers and remanufacturers of locomotives subject to the provisions of subpart A of this part, including all locomotives powered by any locomotive engines subject to the provisions of subpart A of this part.

§ 92.602 Definitions.

Except as otherwise provided, the definitions in subpart A of this part apply to this subpart.

§ 92.603 General provisions.

(a) EPA shall annually identify engine families and configurations within families on which the manufacturer or remanufacturer must conduct in-use emissions testing pursuant to the requirements of this section.

(1) Manufacturers and remanufacturers shall test one locomotive engine family each year for which it has received a certificate of conformity from EPA. Where a manufacturer holds certificates of conformity for both freshly manufactured and remanufactured locomotive engine families, the Administrator may require the manufacturer to test one freshly manufactured engine family and one remanufactured engine family. The Administrator may require a manufacturer or remanufacturer to test additional engine families if he/she has reason to believe that locomotives in an engine family do not comply with emission standards in use.

(2) For engine families of less than 10 locomotives per year, no in-use testing will be required, unless the Administrator has reason to believe that those engine families are not complying with the applicable emission standards in use.

(b) Locomotive manufacturers or remanufacturers shall perform emission testing of a sample of in-use locomotives from an engine family, as specified in § 92.605. Manufacturers or remanufacturers shall submit data from this in-use testing to EPA. EPA will use these data, and any other data available to EPA, to determine the compliance status of classes of locomotives, including for purposes of subpart H of this part, and whether remedial action is appropriate.

§ 92.604 In-use test procedure.

(a) Testing conducted under this subpart shall be conducted on locomotives; testing under this subpart shall not be conducted using an engine that is not installed in a locomotive at the time of testing.

(b) Locomotives tested under this subpart shall be tested using the locomotive test procedures outlined in subpart B of this part, except as provided in this section.

(c) The test procedures used for in-use testing shall be consistent with the test procedures used for certification, except for cases in which certification testing was not conducted with locomotive, but with a development engine, or other engine. In such cases, the Administrator shall require deviations from the certification test procedures as appropriate, including requiring that the test be conducted on a locomotive. The Administrator may allow or require other alternate procedures, with advance approval. For all testing conducted under this subpart, emission rates shall be calculated in accordance with the provisions of subpart B of this part that apply to locomotive testing.

(d) Any adjustable locomotive or locomotive engine parameter must be set to values or positions that are within

the range specified in the certificate of conformity. If so directed by the Administrator, the manufacturer or remanufacturer will set these parameters to values specified by the Administrator.

(e) The Administrator may waive portions or requirements of the applicable test procedure, if any, that are not necessary to determine in-use compliance.

§ 92.605 General testing requirements.

(a) *Number of locomotives to be tested.* The manufacturer or remanufacturer shall test in-use locomotives, from an engine family selected by EPA, which have accumulated between one-half and three-quarters of the engine family's useful life. The number of locomotives to be tested by a manufacturer or remanufacturer will be determined by the following method:

(1) A minimum of 2 locomotives per engine family per year for each engine family that reaches the minimum age specified above provided that no locomotive tested fails to meet any applicable standard. For each failing locomotive, two more locomotives shall be tested until the total number of locomotives tested equals 10, except as provided in paragraph (a)(2) of this section.

(2) If an engine family has not changed from one year to the next and has certified using carry over emission data and has been previously tested under paragraph (a)(1) of this section (and EPA has not ordered or begun to negotiate remedial action of that family), then only one locomotive per engine family per year must be tested. If such locomotive fails to meet applicable standards for any pollutant, testing for that engine family must be conducted as outlined under paragraph (a)(1) of this section.

(b) At the discretion of the Administrator, a locomotive or locomotive engine manufacturer or remanufacturer may test more locomotives than the minima described above or may concede failure before locomotive number 10.

(c) The Administrator will consider failure rates, average emission levels and the existence of any defects among other factors in determining whether to pursue remedial action. The Administrator may order a recall pursuant to subpart H of this part before testing reaches the tenth locomotive.

(d) *Collection of in-use locomotives.* The locomotive manufacturer or remanufacturer shall procure in-use locomotives which have been operated for between one-half and three-quarters of the locomotive's useful life for testing under this subpart. The manufacturer or remanufacturer shall complete testing required by this section for any engine family before useful life of the locomotives in the engine family passes.

§ 92.606 Maintenance, procurement and testing of in-use locomotives.

(a) A test locomotive must have a maintenance history that is representative of actual in-use conditions, and identical or equivalent to the manufacturer's or remanufacturer's recommended emission-related maintenance requirements.

(1) In procuring in-use locomotives for in-use testing, a manufacturer or remanufacturer shall question the end users regarding the accumulated usage, maintenance, operating conditions, and storage of the test locomotives.

(2) The selection of test locomotives is made by the manufacturer or remanufacturer, and is subject to EPA approval. Information used by the manufacturer or remanufacturer to procure locomotives for in-use testing shall be maintained as required in § 92.215.

(b) The manufacturer or remanufacturer may perform minimal set-to-spec maintenance on a test locomotive prior to conducting in-use testing. Maintenance may include only that which is listed in the owner's instructions for locomotives with the amount of service and age of the acquired test locomotive. Documentation of all maintenance and adjustments shall be maintained and retained.

(c) Results of one valid emission test using the test procedure outlined in subpart B of this part is required for each in-use locomotive.

(d) If in-use testing results show that an in-use locomotive fails to comply with any applicable emission standards, the manufacturer or remanufacturer shall determine the reason for

noncompliance. The manufacturer or remanufacturer must report all determinations for noncompliance in its quarterly in-use test result report pursuant to § 92.607(a)(11).

EFFECTIVE DATE NOTE: At 63 FR 19066, Apr. 16, 1998, § 92.606 was added. This section contains information collection and recordkeeping requirements and will not become effective until approval has been given by the Office of Management and Budget.

§ 92.607 In-use test program reporting requirements.

(a) The manufacturer or remanufacturer shall submit to the Administrator within three (3) months of completion of testing all emission testing results generated from the in-use testing program. The following information must be reported for each locomotive tested:

(1) Engine family, and configuration;

(2) Locomotive and engine models;

(3) Locomotive and engine serial numbers;

(4) Date of manufacture and/or remanufacture(s), as applicable;

(5) Megawatt-hours of use (or miles, as applicable);

(6) Date and time of each test attempt;

(7) Results (if any) of each test attempt;

(8) Results of all emission testing;

(9) Summary of all maintenance and/or adjustments performed;

(10) Summary of all modifications and/or repairs;

(11) Determinations of noncompliance; and

(12) The following signed statement and endorsement by an authorized representative of the manufacturer or remanufacturer:

This report is submitted pursuant to Sections 213 and 208 of the Clean Air Act. This in-use testing program was conducted in complete conformance with all applicable regulations under 40 CFR part 92. All data and information reported herein is, to the best of (Company Name) knowledge, true and accurate. I am aware of the penalties associated with violations of the Clean Air Act and the regulations thereunder. (Authorized Company Representative.)

(b) The manufacturer or remanufacturer shall report to the Administrator within three (3) months of completion of testing the following information for each engine family tested:

(1) The serial numbers of all locomotive that were excluded from the test sample because they did not meet the maintenance requirements of § 92.606;

(2) The owner of each locomotive identified in paragraph (b)(1) of this section (or other entity responsible for the maintenance of the locomotive); and

(3) The specific reasons why the locomotives were excluded from the test sample.

(c) The manufacturer or remanufacturer must submit, via floppy disk, the information outlined in paragraphs (a) and (b) of this section using a pre-approved information heading. The Administrator may exempt manufacturers or remanufacturers from this requirement upon written request with supporting justification.

(d) All testing reports and requests for approvals made under this subpart shall be addressed to: Group Manager, Engine Compliance Programs Group, Engine Programs and Compliance Division, U.S. Environmental Protection Agency, 6403–J, 1200 Pennsylvania Ave., NW., Washington, DC 20460.

Subpart H—Recall Regulations

§ 92.701 Applicability.

The requirements of subpart H of this part are applicable to all manufacturers and remanufacturers of locomotives and locomotive engines subject to the provisions of subpart A of this part.

§ 92.702 Definitions.

The definitions of subpart A of this part apply to this subpart.

§ 92.703 Voluntary emissions recall.

(a) Prior to an EPA ordered recall, a manufacturer or remanufacturer may perform (without petition) a voluntary emissions recall pursuant to regulations in subpart E of this part. Such manufacturer or remanufacturer is subject to the reporting requirements in subpart E of this part.

(b) If a determination of nonconformity with the requirements of section 213 of the Act is made (i.e. if EPA orders a recall under the provisions of

section 207(c)), the manufacturer(s) or remanufacturer(s) will not have the option of an alternate remedial action and an actual recall would be required.

§ 92.704 Notice to manufacturer or remanufacturer of nonconformity; submission of remedial plan.

(a) The manufacturer or remanufacturer will be notified whenever the Administrator has determined that a substantial number of a class or category of locomotives or locomotive engines produced by that manufacturer or remanufacturer, although properly maintained and used, do not conform to the regulations prescribed under the Act in effect during, and applicable to the model year of such locomotives or locomotive engines. The notification will include a description of each class or category of locomotives or locomotive engines encompassed by the determination of nonconformity, will give the factual basis for the determination of nonconformity (except information previously provided the manufacturer or remanufacturer by the Agency), and will designate a date, no sooner than 45 days from the date of receipt of such notification, by which the manufacturer or remanufacturer shall have submitted a plan to remedy the nonconformity.

(b) Unless a hearing is requested pursuant to § 92.709, the remedial plan shall be submitted to the Administrator within the time limit specified in the Administrator's notification, provided that the Administrator may grant a manufacturer or remanufacturer an extension upon good cause shown.

(c) If a manufacturer or remanufacturer requests a public hearing pursuant to § 92.709, unless as a result of such hearing the Administrator withdraws his determination of nonconformity, the manufacturer or remanufacturer shall submit the remedial plan within 30 days of the end of such hearing.

§ 92.705 Remedial plan.

(a) When any manufacturer or remanufacturer is notified by the Administrator that a substantial number of any class or category of locomotives or locomotive engines, although properly maintained and used, do not conform to the applicable regulations of this part (including emission standards or family emission limits), the manufacturer or remanufacturer shall submit a plan to the Administrator to remedy such nonconformity. The plan shall contain the following:

(1) A description of each class or category of locomotive or locomotive engine to be recalled including the year(s) of manufacture or remanufacture, the make, the model, the calendar year and such other information as may be required to identify the locomotives or locomotive engines to be recalled.

(2) A description of the specific modifications, alterations, repairs, corrections, adjustments or other changes to be made to bring the locomotives or locomotive engines into conformity, including a brief summary of the data and technical studies which support the manufacturer's or remanufacturer's decision as to the particular remedial changes to be used in correcting the nonconformity.

(3) A description of the method by which the manufacturer or remanufacturer will determine the names and addresses of locomotive or locomotive engine owners.

(4) A description of the proper maintenance or use, if any, upon which the manufacturer or remanufacturer conditions eligibility for repair under the remedial plan, an explanation of the manufacturer's or remanufacturer's reasons for imposing any such condition, and a description of the proof to be required of a locomotive or locomotive engine owner to demonstrate compliance with any such condition. Eligibility may not be denied solely on the basis that the locomotive or locomotive engine owner used parts not manufactured or remanufactured by the original locomotive or locomotive engine manufacturer or remanufacturer, or had repairs not performed by such manufacturer or remanufacturer. No maintenance or use condition may be imposed unless it is, in the judgement of the Administrator, demonstrably related to preventing the nonconformity.

(5) A description of the procedure to be followed by locomotive or locomotive engine owners to obtain correction of the nonconformity. This shall include designation of the date on or after which the owner can have the nonconformity remedied, the time reasonably necessary to perform the labor required to correct the nonconformity, and the designation of facilities at which the nonconformity can be remedied: *Provided,* That repair shall be completed within a reasonable time designated by the Administrator from the date the owner first tenders his locomotive or locomotive engine after the date designated by the manufacturer or remanufacturer as the date on or after which the owner can have the nonconformity remedied.

(6) If some or all of the nonconforming locomotives or locomotive engines are to be remedied by persons other than authorized warranty agents of the manufacturer or remanufacturer, a description of the class of persons other than authorized warranty agents of the manufacturer or remanufacturer who will remedy the nonconformity, and a statement indicating that the participating members of the class will be properly equipped to perform such remedial action.

(7) Three copies of the letters of notification to be sent to locomotive or locomotive engine owners.

(8) A description of the system by which the manufacturer or remanufacturer will assure that an adequate supply of parts will be available to perform the repair under the remedial plan including the date by which an adequate supply of parts will be available to initiate the repair campaign, the percentage of the total parts requirement of each person who is to perform the repair under the remedial plan to be shipped to initiate the campaign, and the method to be used to assure the supply remains both adequate and responsive to owner demand.

(9) Three copies of all necessary instructions to be sent to those persons who are to perform the repair under the remedial plan.

(10) A description of the impact of the changes on fuel consumption, operability, and safety of each class or category of locomotives or locomotive engines to be recalled and a brief summary of the data, technical studies, or engineering evaluations which support these conclusions.

(11) Any other information, reports or data which the Administrator may reasonably determine is necessary to evaluate the remedial plan.

(b)(1) Notification to locomotive or locomotive engine owners shall be made by first class mail or by such means as approved by the Administrator.

(2) The manufacturer or remanufacturer shall use all reasonable means necessary to locate locomotive or locomotive engine owners.

(3) The Administrator reserves the right to require the manufacturer or remanufacturer to send by certified mail or other reasonable means subsequent notification to locomotive or locomotive engine owners.

(c)(1) The manufacturer or remanufacturer shall require those who perform the repair under the remedial plan to affix a label to each locomotive or locomotive engine repaired or, when required, inspected under the remedial plan.

(2) The label shall be placed in such location as approved by the Administrator consistent with Federal Railroad Administration regulations and shall be fabricated of a material suitable for the location in which it is installed and which is not readily removable intact.

(3) The label shall contain:

(i) The recall campaign number; and

(ii) A code designating the campaign facility at which the repair, or inspection for repair was performed.

(4) The Administrator reserves the right to waive any or all of the requirements of this paragraph (c) if he/she determines that they constitute an unwarranted burden to the manufacturer or remanufacturer.

(d) The Administrator may require the manufacturer or remanufacturer to conduct tests on components and locomotives or locomotive engines incorporating a change, repair, or modification reasonably designed and necessary to demonstrate the effectiveness of the change, repair, or modification.

NOTE TO § 92.705: An interpretive ruling regarding § 92.705 is published in Appendix II to this part.

§ 92.706 Approval of plan: Implementation.

(a) If the Administrator finds that the remedial plan is designed and effective to correct the nonconformity, he/she will so notify the manufacturer or remanufacturer in writing. If the remedial plan is not approved, the Administrator will provide the manufacturer or remanufacturer notice of the disapproval and the reasons for the disapproval in writing.

(b) Upon receipt of notice from the Administrator that the remedial plan has been approved, the manufacturer or remanufacturer shall commence implementation of the approved plan. Notification of locomotive or locomotive engine owners shall be in accordance with requirements of this subpart and shall proceed as follows:

(1) When no public hearing as described in § 92.709 is requested by the manufacturer or remanufacturer, notification of locomotive or locomotive engine owners shall commence within 15 working days of the receipt by the manufacturer or remanufacturer of the Administrator's approval unless otherwise specified by the Administrator.

(2) When a public hearing as described in § 92.709 is held, unless as a result of such hearing the Administrator withdraws the determination of nonconformity, the Administrator shall, within 60 days after the completion of such hearing, order the manufacturer or remanufacturer to provide prompt notification of such nonconformity.

§ 92.707 Notification to locomotive or locomotive engine owners.

(a) The notification of locomotive or locomotive engine owners shall contain the following:

(1) The statement: ''The Administrator of the U.S. Environmental Protection Agency has determined that your locomotive or locomotive engine may be emitting pollutants in excess of the federal emission standards or family emission limits, as defined in 40 CFR part 92. These standards or family emission limits, as defined in 40 CFR part 92 were established to protect the public health or welfare from the dangers of air pollution.''

(2) A statement that the nonconformity of any such locomotives or locomotive engines which have been, if required by the remedial plan, properly maintained and used, will be remedied at the expense of the manufacturer or remanufacturer.

(3) A description of the proper maintenance or use, if any, upon which the manufacturer or remanufacturer conditions eligibility for repair under the remedial plan and a description of the proof to be required of a locomotive or locomotive engine owner to demonstrate compliance with such condition. Eligibility may not be denied solely on the basis that the locomotive or locomotive engine owner used parts not manufactured or remanufactured by the manufacturer or remanufacturer, or had repairs not performed by the manufacturer or remanufacturer.

(4) A clear description of the components which will be affected by the remedy and a general statement of the measures to be taken to correct the nonconformity.

(5) A description of the adverse effects, if any, that an uncorrected nonconformity would have on the performance or operability of the locomotive or locomotive engine.

(6) A description of the adverse effects, if any, that such nonconformity would have on the performance or operability of the locomotive or locomotive engine.

(7) A description of the average effects, if any, that such nonconformity would have on the functions of other locomotive or locomotive engine components.

(8) A description of the procedure which the locomotive or locomotive engine owner should follow to obtain correction of the nonconformity. This shall include designation of the date on or after which the owner can have the nonconformity remedied, the time reasonably necessary to perform the labor required to correct the nonconformity, and the designation of facilities at which the nonconformity can be remedied.

(9) A telephone number provided by the manufacturer or remanufacturer,

which may be used to report difficulty in obtaining recall repairs.

(10) The statement: ''In order to ensure your full protection under the emission warranty made applicable to your (locomotive or locomotive engine) by federal law, and your right to participate in future recalls, it is recommended that you have (locomotive or locomotive engine) serviced as soon as possible. Failure to do so could legally be determined to be a lack of proper maintenance of your (locomotive or locomotive engine).''

(b) No notice sent pursuant to paragraph (a) of this section nor any other contemporaneous communication sent to locomotive or locomotive engine owners or dealers shall contain any statement or implication that the nonconformity does not exist or that the nonconformity will not degrade air quality.

(c) The manufacturer or remanufacturer shall be informed of any other requirements pertaining to the notification under this section which the Administrator has determined are reasonable and necessary to ensure the effectiveness of the recall campaign.

§ 92.708 Records and reports.

(a) The manufacturer or remanufacturer shall provide to the Administrator a copy of all communications which relate to the remedial plan directed to persons who are to perform the repair under the remedial plan. Such copies shall be mailed to the Administrator contemporaneously with their transmission to persons who are to perform the repair under the remedial plan.

(b) The manufacturer or remanufacturer shall provide for the establishment and maintenance of records to enable the Administrator to conduct a continuing analysis of the adequacy of the recall campaign. The records shall include, for each class or category of locomotive or locomotive engine, but need not be limited to, the following:

(1) Recall campaign number as designated by the manufacturer or remanufacturer.

(2) Date owner notification was begun, and date completed.

(3) Number of locomotives or locomotive engines involved in the recall campaign.

(4) Number of locomotives or locomotive engines known or estimated to be affected by the nonconformity.

(5) Number of locomotives or locomotive engines inspected pursuant to the remedial plan.

(6) Number of inspected locomotives or locomotive engines found to be affected by the nonconformity.

(7) Number of locomotives or locomotive engines actually receiving repair under the remedial plan.

(8) Number of locomotives or locomotive engines determined to be unavailable for inspection or repair under the remedial plan due to exportation, scrapping or for other reasons (specify).

(9) Number of locomotives or locomotive engines determined to be ineligible for remedial action due to a failure to properly maintain or use such locomotives or locomotive engines.

(c) If the manufacturer or remanufacturer determines that the original answers for paragraphs (b)(3) and (b)(4) of this section are incorrect, revised figures and an explanatory note shall be submitted. Answers to paragraphs (b)(5), (b)(6), (b)(7), (b)(8), and (b)(9) of this section shall be cumulative totals.

(d) Unless otherwise directed by the Administrator, the information specified in paragraph (b) of this section shall be included in quarterly reports, with respect to each recall campaign, for six consecutive quarters beginning with the quarter in which the notification of owners was initiated, or until all nonconforming locomotives or locomotive engines involved in the campaign have been remedied, whichever occurs sooner. Such reports shall be submitted no later than 25 working days after the close of each calendar quarter.

(e) The manufacturer or remanufacturer shall maintain in a form suitable for inspection, such as computer information storage devices or card files, lists of the names and addresses of locomotive or locomotive engine owners:

(1) To whom notification was given;

(2) Who received remedial repair or inspection under the remedial plan; and

(3) When eligibility for repair is conditioned on proper maintenance or use, that were determined not to qualify for such remedial action.

(f) The records described in paragraph (e) of this section shall be made available to the Administrator upon request.

(g) The records and reports required by this section shall be retained for not less than eight (8) years.

EFFECTIVE DATE NOTE: At 63 FR 19069, Apr. 16, 1998, § 92.708 was added. This section contains information collection and recordkeeping requirements and will not become effective until approval has been given by the Office of Management and Budget.

§ 92.709 Public hearings.

(a) *Definitions.* The following definitions shall be applicable to this section:

(1) *Hearing Clerk* shall mean the Hearing Clerk of the Environmental Protection Agency.

(2) *Intervenor* shall mean a person who files a petition to be made an intervenor pursuant to paragraph (g) of this section and whose petition is approved.

(3) *Manufacturer or remanufacturer* refers to a manufacturer or remanufacturer contesting a recall order directed at that manufacturer or remanufacturer.

(4) *Party* shall include the Environmental Protection Agency, the manufacturer or remanufacturer, and any intervenors.

(5) *Presiding Officer* shall mean an Administrative Law Judge appointed pursuant to 5 U.S.C. 3105 (see also 5 CFR part 930).

(6) *Environmental Appeals Board* shall mean the Board within the Agency described in § 1.25 of this chapter. The Administrator delegates authority to the Environmental Appeals Board to issue final decisions in appeals filed under this subpart. Appeals directed to the Administrator, rather than to the Environmental Appeals Board, will not be considered. This delegation of authority to the Environmental Appeals Board does not preclude the Environmental Appeals Board from referring an appeal or a motion filed under this subpart to the Administrator for decision when the Environmental Appeals Board, in its discretion, deems it appropriate to do so. When an appeal or motion is referred to the Administrator, all parties shall be so notified and the rules in this part referring to the Environmental Appeals Board shall be interpreted as referring to the Administrator.

(b) *Request for public hearing.* (1)(i) If the manufacturer or remanufacturer disagrees with the Administrator's finding of nonconformity he may request a public hearing as described in this section. Requests for such a hearing shall be filed with the Administrator not later than 45 days after the receipt of the Administrator's notification of nonconformity unless otherwise specified by the Administrator. Two copies of such request shall simultaneously be served upon the Director of the Engine Programs and Compliance Division and two copies filed with the Hearing Clerk. Failure of the manufacturer or remanufacturer to request a hearing within the time provided shall constitute a waiver of his right to such a hearing. In such a case, the manufacturer or remanufacturer shall carry out the recall order as required by § 92.705.

(ii) Subsequent to the expiration of the period for requesting a hearing as of right, the Administrator may, in his discretion and for good cause shown, grant the manufacturer or remanufacturer a hearing to contest the nonconformity.

(2) The request for a public hearing shall contain:

(i) A statement as to which classes or categories of locomotives or locomotive engines are to be the subject of the hearing;

(ii) A concise statement of the issues to be raised by the manufacturer or remanufacturer at the hearing for each class or category of locomotive or locomotive engine for which the manufacturer or remanufacturer has requested the hearing; and

(iii) A statement as to reasons the manufacturer or remanufacturer believes it will prevail on the merits on each of the issues so raised.

(3) A copy of all requests for public hearings shall be kept on file in the Office of the Hearing Clerk and shall be

made available to the public during Agency business hours.

(c) *Filing and service.* (1) An original and two copies of all documents or papers required or permitted to be filed pursuant to this section shall be filed with the Hearing Clerk. Filing shall be deemed timely if mailed, as determined by the postmark, to the Hearing Clerk within the time allowed by this section. If filing is to be accomplished by mailing, the documents shall be sent to the address set forth in the notice of public hearing as described in paragraph (f) of this section.

(2) Except for requests to commence a hearing, at the same time a party files with the Hearing Clerk any additional issues for consideration at the hearing or any written testimony, documents, papers, exhibits, or materials, to be introduced into evidence or papers filed in connection with any appeal, it shall serve upon all other parties copies thereof. A certificate of service shall be provided on or accompany each document or paper filed with the Hearing Clerk. Documents to be served upon the Director of the Engine Programs and Compliance Division shall be mailed to: Director, Engine Programs and Compliance Division 6403–J, U.S. Environmental Protection Agency, 1200 Pennsylvania Ave., NW., Washington, DC 20460. Service by mail is complete upon mailing.

(d) *Time.* (1) In computing any period of time prescribed or allowed by this section, except as otherwise provided, the day of the act or event from which the designated period of time begins to run shall not be included. Saturdays, Sundays, and Federal legal holidays shall be included in computing any such period allowed for the filing of any document or paper, except that when such period expires on a Saturday, Sunday, or Federal legal holiday, such period shall be extended to include the next following business day.

(2) A prescribed period of time within which a party is required or permitted to do an act shall be computed from the time of service, except that when service is accomplished by mail, three days shall be added to the prescribed period.

(e) *Consolidation.* The Administrator or the Presiding Officer in his discretion may consolidate two or more proceedings to be held under this section for the purpose of resolving one or more issues whenever it appears that such consolidation will expedite or simplify consideration of such issues. Consolidation shall not affect the right of any party to raise issues that could have been raised if consolidation had not occurred.

(f) *Notice of public hearings.* (1) Notice of a public hearing under this section shall be given by publication in the FEDERAL REGISTER. Notice will be given at least 30 days prior to the commencement of such hearings.

(2) The notice of a public hearing shall include the following information:

(i) The purpose of the hearing and the legal authority under which the hearing is to be held;

(ii) A brief summary of the Administrator's determination of nonconformity;

(iii) A brief summary of the manufacturer's or remanufacturer's basis for contesting the Administrator's determination of nonconformity;

(iv) Information regarding the time and location of the hearing and the address to which all documents required or permitted to be filed should be sent;

(v) The address of the Hearing Clerk to whom all inquiries should be directed and with whom documents are required to be filed;

(vi) A statement that all petitions to be made an intervenor must be filed with the Hearing Clerk within 25 days from the date of the notice of public hearing and must conform to the requirements of paragraph (g) of this section.

(3) The notice of public hearing shall be issued by the General Counsel.

(g) *Intervenors.* (1) Any person desiring to intervene in a hearing to be held under section 207(c)(1) of the Act shall file a petition setting forth the facts and reasons why he/she thinks he/she should be permitted to intervene.

(2) In passing upon a petition to intervene, the following factors, among other things, shall be considered by the Presiding Officer:

(i) The nature of the petitioner's interest including the nature and the extent of the property, financial, environmental protection, or other interest of the petitioner;

(ii) The effect of the order which may be entered in the proceeding on petitioner's interest;

(iii) The extent to which the petitioner's interest will be represented by existing parties or may be protected by other means;

(iv) The extent to which petitioner's participation may reasonably be expected to assist materially in the development of a complete record;

(v) The effect of the intervention on the Agency's statutory mandate.

(3) A petition to intervene must be filed within 25 days following the notice of public hearing under section 207(c)(1) of the Act and shall be served on all parties. Any opposition to such petition must be filed within five days of such service.

(4) All petitions to be made an intervenor shall be reviewed by the Presiding Officer using the criteria set forth in paragraph (g)(2) of this section and considering any oppositions to such petition. Where the petition demonstrates that the petitioner's interest is limited to particular issues, the Presiding Officer may, in granting such petition, limit petitioner's participation to those particular issues only.

(5) If the Presiding Officer grants the petition with respect to any or all issues, he/she shall so notify, or direct the Hearing Clerk to notify, the petitioner and all parties. If the Presiding Officer denies the petition he/she shall so notify, or direct the Hearing Clerk to notify, the petitioner and all parties and shall briefly state the reasons why the petition was denied.

(6) All petitions to be made an intervenor shall include an agreement by the petitioner, and any person represented by the petitioner, to be subject to examination and cross-examination and to make any supporting and relevant records available at its own expense upon the request of the Presiding Officer, on his/her own motion or the motion of any party or other intervenor. If the intervenor fails to comply with any such request, the Presiding Officer may in his/her discretion, terminate his/her status as an intervenor.

(h) *Intervention by motion*. Following the expiration of the time prescribed in paragraph (g) of this section for the submission of petitions to intervene in a hearing, any person may file a motion with the Presiding Officer to intervene in a hearing. Such a motion must contain the information and commitments required by paragraphs (g)(2) and (g)(6) of this section, and, in addition, must show that there is good cause for granting the motion and must contain a statement that the intervenor shall be bound by agreements, arrangements, and other determinations which may have been made in the proceeding.

(i) *Amicus Curiae*. Persons not parties to the proceedings wishing to file briefs may do so by leave of the Presiding Officer granted on motion. A motion for leave shall identify the interest of the applicant and shall state the reasons why the amicus brief is desirable.

(j) *Presiding Officer*. The Presiding Officer shall have the duty to conduct a fair and impartial hearing in accordance with 5 U.S.C. 554, 556 and 557, to take all necessary action to avoid delay in the disposition of the proceedings and to maintain order. He/she shall have all power consistent with Agency rule and with the Administrative Procedure Act (5 U.S.C. 551 *et seq.*) necessary to this end, including the following:

(1) To administer oaths and affirmations;

(2) To rule upon offers of proof and receive relevant evidence;

(3) To regulate the course of the hearings and the conduct of the parties and their counsel therein;

(4) To hold conferences for simplification of the issues or any other proper purpose;

(5) To consider and rule upon all procedural and other motions appropriate in such proceedings;

(6) To require the submission of direct testimony in written form with or without affidavit whenever, in the opinion of the Presiding Officer, oral testimony is not necessary for full and true disclosure of the facts. Testimony concerning the conduct and results of

tests and inspections may be submitted in written form;

(7) To enforce agreements and orders requiring access as authorized by law;

(8) To require the filing of briefs on any matter on which he/she is required to rule;

(9) To require any party or any witness, during the course of the hearing, to state his/her position on any issue;

(10) To take or cause depositions to be taken whenever the ends of justice would be served thereby;

(11) To make decisions or recommend decisions to resolve the disputed issues of the record of the hearing;

(12) To issue, upon good cause shown, protective orders as described in paragraph (n) of this section.

(k) *Conferences.* (1) At the discretion of the Presiding Officer, conferences may be held prior to or during any hearing. The Presiding Officer shall direct the Hearing Clerk to notify all parties and intervenors of the time and location of any such conference. At the discretion of the Presiding Officer, persons other than parties may attend. At a conference the Presiding Officer may:

(i) Obtain stipulations and admissions, receive requests and order depositions to be taken, identify disputed issues of fact and law, and require or allow the submission of written testimony from any witness or party;

(ii) Set a hearing schedule for as many of the following as are deemed necessary by the Presiding Officer:

(A) Oral and written statements;

(B) Submission of written direct testimony as required or authorized by the Presiding Officer;

(C) Oral direct and cross-examination of a witness where necessary as prescribed in paragraph (p) of this section;

(D) Oral argument, if appropriate;

(iii) Identify matters of which official notice may be taken;

(iv) Consider limitation of the number of expert and other witnesses;

(v) Consider the procedure to be followed at the hearing; and

(vi) Consider any other matter that may expedite the hearing or aid in the disposition of the issue.

(2) The results of any conference including all stipulations shall, if not transcribed, be summarized in writing by the Presiding Officer and made part of the record.

(l) *Primary discovery (exchange of witness lists and documents).* (1) At a prehearing conference or within some reasonable time set by the Presiding Officer prior to the hearing, each party shall make available to the other parties the names of the expert and other witnesses the party expects to call, together with a brief summary of their expected testimony and a list of all documents and exhibits which the party expects to introduce into evidence. Thereafter, witnesses, documents, or exhibits may be added and summaries of expected testimony amended upon motion by a party.

(2)(i) The Presiding Officer, may, upon motion by a party or other person, and for good cause shown, by order:

(A) Restrict or defer disclosure by a party of the name of a witness or a narrative summary of the expected testimony of a witness; and

(B) Prescribe other appropriate measures to protect a witness.

(ii) Any party affected by any such action shall have an adequate opportunity, once he learns the name of a witness and obtains the narrative summary of his expected testimony, to prepare for the presentation of his case.

(m) *Other discovery.* (1) Except as so provided by paragraph (l) of this section, further discovery, under this paragraph (m), shall be permitted only upon determination by the Presiding Officer:

(i) That such discovery will not in any way unreasonably delay the proceeding;

(ii) That the information to be obtained is not obtainable voluntarily; and

(iii) That such information has significant probative value. The Presiding Officer shall be guided by the procedures set forth in the Federal Rules of Civil Procedure (28 U.S.C.), where practicable, and the precedents thereunder, except that no discovery shall be undertaken except upon order of the Presiding Officer or upon agreement of the parties.

(2) The Presiding Officer shall order depositions upon oral questions only

upon a showing of good cause and upon a finding that:

(i) The information sought cannot be obtained by alternative methods; or

(ii) There is a substantial reason to believe that relevant and probative evidence may otherwise not be preserved for presentation by a witness at the hearing.

(3) Any party to the proceeding desiring an order of discovery shall make a motion or motions therefor. Such a motion shall set forth:

(i) The circumstances warranting the taking of the discovery;

(ii) The nature of the information expected to be discovered; and

(iii) The time and place where it will be taken. If the Presiding Officer determines the motion should be granted, he shall issue an order for the taking of such discovery together with the conditions and terms thereof.

(4) Failure to comply with an order issued pursuant to this paragraph (m) may lead to the inference that the information to be discovered would be adverse to the person or party from whom the information was sought.

(n) *Protective orders: in camera proceedings.* (1) Upon motion by a party or by the person from whom discovery is sought, and upon a showing by the movant that the disclosure of the information to be discovered, or a particular part thereof, (other than emission data) would result in methods or processes entitled to protection as trade secrets of such person being divulged, the Presiding Officer may enter a protective order with respect to such material. Any protective order shall contain such terms governing the treatment of the information as may be appropriate under the circumstances to prevent disclosure outside the hearing: *Provided,* That the order shall state that the material shall be filed separately from other evidence and exhibits in the hearing. Disclosure shall be limited to parties to the hearing, their counsel and relevant technical consultants, and authorized representatives of the United States concerned with carrying out the Act. Except in the case of the government, disclosure may be limited to counsel to parties who shall not disclose such information to the parties themselves. Except in the case of the government, disclosure to a party or his counsel shall be conditioned on execution of a sworn statement that no disclosure of the information will be made to persons not entitled to receive it under the terms of the protective order. (No such provision is necessary where government employees are concerned because disclosure by them is subject to the terms of 18 U.S.C. 1905.)

(2)(i) A party or person seeking a protective order may be permitted to make all or part of the required showing in camera. A record shall be made of such in camera proceedings. If the Presiding Officer enters a protective order following a showing in camera, the record of such showing shall be sealed and preserved and made available to the Agency or court in the event of appeal.

(ii) Attendance at any in camera proceeding may be limited to the Presiding Officer, the Agency, and the person or party seeking the protective order.

(3) Any party, subject to the terms and conditions of any protective order issued pursuant to paragraph (n)(1) of this section, desiring for the presentation of his/her case to make use of any in camera documents or testimony shall make application to the Presiding Officer by motion setting forth the justification therefor. The Presiding Officer, in granting any such motion, shall enter an order protecting the rights of the affected persons and parties and preventing unnecessary disclosure of such information, including the presentation of such information and oral testimony and cross-examination concerning it in executive session, as in his/her discretion is necessary and practicable.

(4) In the submittal of findings, briefs, or other papers, counsel for all parties shall make a good faith attempt to refrain from disclosing the specific details of in camera documents and testimony. This shall not preclude references in such findings, briefs, or other papers to such documents or testimony including generalized statements based on their contents. To the extent that counsel consider it necessary to include specific details in their presentations, such data shall be

incorporated in separate findings, briefs, or other papers marked ''confidential'', which shall become part of the in camera record.

(o) *Motions*. (1) All motions, except those made orally during the course of the hearing, shall be in writing and shall state with particularity the grounds therefor, shall set forth the relief or order sought, and shall be filed with the Hearing Clerk and served upon all parties.

(2) Within ten days after service of any motion filed pursuant to this section, or within such other time as may be fixed by the Environmental Appeals Board or the Presiding Officer, as appropriate, any party may serve and file an answer to the motion. The movant shall, if requested by the Environmental Appeals Board or the Presiding Officer, as appropriate, serve and file reply papers within the time set by the request.

(3) The Presiding Officer shall rule upon all motions filed or made prior to the filing of his decision or accelerated decision, as appropriate. The Environmental Appeals Board shall rule upon all motions filed prior to the appointment of a Presiding Officer and all motions filed after the filing of the decision of the Presiding Officer or accelerated decision. Oral argument of motions will be permitted only if the Presiding Officer or the Environmental Appeals Board, as appropriate, deems it necessary.

(p) *Evidence*. (1) The official transcripts and exhibits, together with all papers and requests filed in the proceeding, shall constitute the record. Immaterial or irrelevant parts of an admissible document shall be segregated and excluded so far as practicable. Documents or parts thereof subject to a protective order under paragraph (n) of this section shall be segregated. Evidence may be received at the hearing even though inadmissible under the rules of evidence applicable to judicial proceedings. The weight to be given evidence shall be determined by its reliability and probative value.

(2) The Presiding Officer shall allow the parties to examine and to cross-examine a witness to the extent that such examination and cross-examination is necessary for a full and true disclosure of the facts.

(3) Rulings of the Presiding Officer on the admissibility of evidence, the propriety of examination and cross-examination and other procedural matters shall appear in the record.

(4) Parties shall automatically be presumed to have taken exception to an adverse ruling.

(q) *Interlocutory appeal*. (1) An interlocutory appeal may be taken to the Environmental Appeals Board either:

(i) With the consent of the Presiding Officer and where he certifies on the record or in writing that the allowance of an interlocutory appeal is clearly necessary to prevent exceptional delay, expense or prejudice to any party or substantial detriment to the public interest; or

(ii) Absent the consent of the Presiding Officer, by permission of the Environmental Appeals Board.

(2) Applications for interlocutory appeal of any ruling or order of the Presiding Officer may be filed with the Presiding Officer within 5 days of the issuance of the ruling or order being appealed. Answers thereto by other parties may be filed within 5 days of the service of such applications.

(3) The Presiding Officer shall rule on such applications within 5 days of the filing of such application or answers thereto.

(4) Applications to file such appeals absent consent of the Presiding Officer shall be filed with the Environmental Appeals Board within 5 days of the denial of any appeal by the Presiding Officer.

(5) The Environmental Appeals Board will consider the merits of the appeal on the application and any answers thereto. No oral argument will be heard nor other briefs filed unless the Environmental Appeals Board directs otherwise.

(6) Except under extraordinary circumstances as determined by the Presiding Officer, the taking of an interlocutory appeal will not stay the hearing.

(r) *Record*. (1) Hearings shall be stenographically reported and transcribed, and the original transcript shall be part of the record and the sole official transcript. Copies of the record shall be

filed with the Hearing Clerk and made available during Agency business hours for public inspection. Any person desiring a copy of the record of the hearing or any part thereof shall be entitled to the same upon payment of the cost thereof.

(2) The official transcripts and exhibits, together with all papers and requests filed in the proceeding, shall constitute the record.

(s) *Findings, conclusions.* (1) Within 20 days of the close of the reception of evidence, or within such longer time as may be fixed by the Presiding Officer, any party may submit for the consideration of the Presiding Officer findings of fact, conclusions of law, and a rule or order, together with reasons therefor and briefs in support thereof. Such proposals shall be in writing, shall be served upon all parties, and shall contain adequate references to the record and authorities relied on.

(2) The record shall show the Presiding Officer's ruling on the findings and conclusions except when his/her order disposing of the proceeding otherwise informs the parties of the action taken by him/her thereon.

(t) *Decision of the Presiding Officer.* (1) Unless extended by the Environmental Appeals Board, the Presiding Officer shall issue and file with the Hearing Clerk his decision within 30 days after the period for filing findings as provided for in paragraph (s) of this section has expired.

(2) The Presiding Officer's decision shall become the opinion of the Environmental Appeals Board:

(i) When no notice of intention to appeal as described in paragraph (u) of this section is filed, 30 days after the issuance thereof, unless in the interim the Environmental Appeals Board shall have taken action to review or stay the effective date of the decision; or

(ii) When a notice of intention to appeal is filed but the appeal is not perfected as required by paragraph (u) of this section, 5 days after the period allowed for perfection of an appeal has expired unless within that 5 day period, the Environmental Appeals Board shall have taken action to review or stay the effective date of the decision.

(3) The Presiding Officer's decision shall include a statement of findings and conclusions, as well as the reasons or basis therefor, upon all the material issues of fact or law presented on the record and an appropriate rule or order. Such decision shall be supported by substantial evidence and based upon a consideration of the whole record.

(4) At any time prior to the issuance of his decision, the Presiding Officer may reopen the proceeding for the reception of further evidence. Except for the correction of clerical errors, the jurisdiction of the Presiding Officer is terminated upon the issuance of his/her decision.

(u) *Appeal from the decision of the Presiding Officer.* (1) Any party to a proceeding may appeal the Presiding Officer's decision to the Environmental Appeals Board, Provided, That within 10 days after issuance of the Presiding Officer's decision such party files a notice of intention to appeal and an appeal brief within 30 days of such decision.

(2) When an appeal is taken from the decision of the Presiding Officer, any party may file a brief with respect to such appeal. The brief shall be filed within 20 days of the date of the filing of the appellant's brief.

(3) Any brief filed pursuant to this paragraph (u) shall contain in the order indicated, the following:

(i) A subject index of the matter in the brief, with page references, and a table of cases (alphabetically arranged), textbooks, statutes, and other material cited, with page references thereto;

(ii) A specification of the issues intended to be urged;

(iii) The argument presenting clearly the points of fact and law relied upon in support of the position taken on each issue, with specific page references to the record and the legal or other material relied upon; and

(iv) A form of rule or order for the Environmental Appeals Board's consideration if different from the rule or order contained in the Presiding Officer's decision.

(4) No brief in excess of 40 pages shall be filed without leave of the Environmental Appeals Board.

(5) Oral argument will be allowed in the discretion of the Environmental Appeals Board.

(v) *Review of the Presiding Officer's decision in absence of appeal.* (1) If, after the expiration of the period for taking an appeal as provided for by paragraph (u) of this section, no notice of intention to appeal the decision of the Presiding Officer has been filed, or if filed, not perfected, the Hearing Clerk shall so notify the Environmental Appeals Board.

(2) The Environmental Appeals Board, upon receipt of notice from the Hearing Clerk that no notice of intention to appeal has been filed, or if filed, not perfected pursuant to paragraph (u) of this section, may, on its own motion, within the time limits specified in paragraph (t)(2) of this section, review the decision of the Presiding Officer. Notice of the intention of the Environmental Appeals Board to review the decision of the Presiding Officer shall be given to all parties and shall set forth the scope of such review and the issue which shall be considered and shall make provision for filing of briefs.

(w) *Decision on appeal or review.* (1) Upon appeal from or review of the Presiding Officer's decision, the Environmental Appeals Board shall consider such parts of the record as are cited or as may be necessary to resolve the issues presented and, in addition shall to the extent necessary or desirable exercise all the powers which it could have exercised if it had presided at the hearing.

(2) In rendering its decision, the Environmental Appeals Board shall adopt, modify, or set aside the findings, conclusions, and rule or order contained in the decision of the Presiding Officer and shall set forth in its decision a statement of the reasons or bases for its action.

(3) In those cases where the Environmental Appeals Board determines that it should have further information or additional views of the parties as to the form and content of the rule or order to be issued, the Environmental Appeals Board, in its discretion, may withhold final action pending the receipt of such additional information or views, or may remand the case to the Presiding Officer.

(x) *Reconsideration.* Within twenty (20) days after issuance of the Environmental Appeals Board's decision, any party may file with the Environmental Appeals Board a petition for reconsideration of such decision, setting forth the relief desired and the grounds in support thereof. Any petition filed under this paragraph (x) must be confined to new questions raised by the decision or the final order and upon which the petitioner had no opportunity to argue before the Presiding Officer or the Environmental Appeals Board. Any party desiring to oppose such a petition shall file and answer thereto within ten (10) days after the filing of the petition. The filing of a petition for reconsideration shall not operate to stay the effective date of the decision or order or to toll the running of any statutory time period affecting such decision or order unless specifically so ordered by the Environmental Appeals Board.

(y) *Accelerated decision: Dismissal.* (1) The Presiding Officer, upon motion of any party or sua sponte, may at any time render an accelerated decision in favor of the Agency or the manufacturer or remanufacturer as to all or any part of the proceeding, without further hearing or upon such limited additional evidence such as affidavits as he/she may require, or dismiss any party with prejudice, under any of the following conditions:

(i) Failure to state a claim upon which relief can be granted, or direct or collateral estoppel;

(ii) There is no genuine issue of material fact and a party is entitled to judgment as a matter of law; or

(iii) Such other and further reasons as are just, including specifically failure to obey a procedural order of the Presiding Officer.

(2) If under this paragraph (y) an accelerated decision is issued as to all the issues and claims joined in the proceeding, the decision shall be treated for the purposes of these procedures as the decision of the Presiding Officer as provided in paragraph (p) of this section.

(3) If under this paragraph (y), judgment is rendered on less than all issues or claims in the proceeding, the Presiding Officer shall determine what material facts exist without substantial controversy and what material

facts are actually and in good faith controverted. He/she shall thereupon issue an order specifying the facts which appear without substantial controversy, and the issues and claims upon which the hearing will proceed.

(z) *Conclusion of hearing.* (1) If, after the expiration of the period for taking an appeal as provided for by paragraph (u) of this section, no appeal has been taken from the Presiding Officer's decision, and, after the expiration of the period for review by the Environmental Appeals Board on its own motion as provided for by paragraph (v) of this section, the Environmental Appeals Board does not move to review such decision, the hearing will be deemed to have ended at the expiration of all periods allowed for such appeal and review.

(2) If an appeal of the Presiding Officer's decision is taken pursuant to paragraph (u) of this section, or if, in the absence of such appeal, the Environmental Appeals Board moves to review the decision of the Presiding Officer pursuant to paragraph (v) of this section, the hearing will be deemed to have ended upon the rendering of a final decision by the Environmental Appeals Board.

(aa) *Judicial review.* (1) The Administrator hereby designates the Deputy General Counsel, Environmental Protection Agency as the officer upon whom copy of any petition for judicial review shall be served. Such officer shall be responsible for filing in the court the record on which the order of the Environmental Appeals Board is based.

(2) Before forwarding the record to the court, the Agency shall advise the petitioner of costs of preparing it and as soon as payment to cover fees is made shall forward the record to the court.

Subpart I—Importation of Nonconforming Locomotives and Locomotive Engines

§ 92.801 Applicability.

(a) Except where otherwise indicated, this subpart is applicable to importers of locomotives or locomotive engines for which the Administrator has promulgated regulations under this part prescribing emission standards, that are offered for importation or imported into the United States, but which locomotives or locomotive engines, at the time of importation or being offered for importation, are not covered by certificates of conformity issued under section 213 and section 206(a) of the Clean Air Act (that is, which are nonconforming locomotives or locomotive engines as defined in § 92.2), and this part. Compliance with regulations under this subpart does not relieve any person or entity from compliance with other applicable provisions of the Clean Air Act.

(b) Regulations prescribing further procedures for the importation of locomotives and locomotive engines into the Customs territory of the United States, as defined in 19 U.S.C. 1202, are set forth in U.S. Customs Service regulations (19 CFR chapter I).

§ 92.802 Definitions.

The definitions of subpart A of this part apply to this subpart.

§ 92.803 Admission.

A nonconforming locomotive or locomotive engine offered for importation may be admitted into the United States pursuant to the provisions of this subpart. In order to obtain admission the importer must submit to the Administrator a written request for approval containing the following:

(a) Identification of the importer of the locomotive or locomotive engine and the importer's address, telephone number, and taxpayer identification number;

(b) Identification of the locomotive's or locomotive engine's owner, the owner's address, telephone number, and taxpayer identification number;

(c) Identification of the locomotive and/or locomotive engine including make, model, identification number, and original production year;

(d) Information indicating the provision in this subpart under which the locomotive or locomotive engine is to be imported;

(e) Identification of the place(s) where the locomotive or locomotive engine is to be stored until EPA approval of the importer's application to the Administrator for final admission;

(f) Authorization for EPA enforcement officers to conduct inspections or testing otherwise permitted by the Act or regulations thereunder; and

(g) Such other information as is deemed necessary by the Administrator.

§ 92.804 Exemptions.

(a) Unless otherwise specified, any person may apply for the exemptions allowed by this section.

(b) Notwithstanding other requirements of this subpart, a nonconforming locomotive or locomotive engine that qualifies for a temporary exemption under this paragraph may be conditionally admitted into the United States if prior written approval for the conditional admission is obtained from the Administrator. Conditional admission is to be under bond. The Administrator may request that the U.S. Customs Service require a specific bond amount to ensure compliance with the requirements of the Act and this subpart. A written request for a temporary exemption from the Administrator shall contain the identification required in § 92.803 and information that demonstrates that the locomotives and or locomotive engines qualify for an exemption. Noncompliance with provisions of this section may result in the forfeiture of the total amount of the bond and/or exportation of the locomotive or locomotive engine. The following temporary exemptions are permitted by this paragraph (b):

(1) *Exemption for repairs or alterations.* Upon written approval by EPA, a person may conditionally import under bond a nonconforming locomotive or locomotive engine solely for purpose of repair(s) or alteration(s). The locomotive or locomotive engine may not be operated in the United States other than for the sole purpose of repair or alteration or shipment to the point of repair or alteration and to the port of export. It may not be sold or leased in the United States and is to be exported upon completion of the repair(s) or alteration(s).

(2) *Testing exemption.* A nonconforming test locomotive or locomotive engine may be conditionally imported by a person subject to the requirements of § 92.905. A test locomotive or locomotive engine may be operated in the United States provided that the operation is an integral part of the test. This exemption is limited to a period not exceeding one year from the date of importation unless a request is made by the appropriate importer, and subsequently granted by EPA, concerning the locomotive or locomotive engine in accordance with § 92.905 for a subsequent one-year period.

(3) *Display exemptions.* (i) A nonconforming locomotive or locomotive engine intended solely for display may be conditionally imported under bond subject to the requirements of § 92.906(b).

(ii) A display locomotive or locomotive engine may be imported by any person for purposes related to a business or the public interest. Such purposes do not include collections normally inaccessible or unavailable to the public on a daily basis, display of a locomotive or locomotive engine at a dealership, private use, or other purpose that the Administrator determines is not appropriate for display exemptions. A display locomotive or locomotive engine may not be sold or leased in the United States and may not be operated in the United States except for the operation incident and necessary to the display purpose.

(iii) A display exemption is granted for 12 months or for the duration of the display purpose, whichever is shorter. Extensions of up to 12 months each are available upon approval by the Administrator. In no circumstances, however, may the total period of exemption exceed 36 months.

(c) National security exemption. Notwithstanding any other requirement of this subpart, a locomotive or locomotive engine may be permanently imported into the United States under the national security exemption found at § 92.908, if prior written approval for such permanent importation is obtained from the Administrator. A request for approval is to contain the identification information required in § 92.803 and information that demonstrates that the importer is entitled to the exemption.

(d) An application for exemption provided for in paragraphs (b) and (c) of this section shall be mailed to: Group Manager, Engine Compliance Programs

Group, Engine Programs and Compliance Division U.S. Environmental Protection Agency, 6403–J, 1200 Pennsylvania Ave., NW., Washington, DC 20460, Attention: Imports.

(e) Incidental use exemption. Locomotives that are operated primarily outside of the United States, and that enter the United States temporarily from Canada or Mexico are exempt from the requirements and prohibitions of this part without application, provided that the operation within the United States is not extensive and is incidental to their primary operation.

§ 92.805 Prohibited acts; penalties.

(a) The importation of a locomotive or locomotive engine which is not covered by a certificate of conformity other than in accordance with this subpart and the entry regulations of the U.S. Customs Service is prohibited. Failure to comply with this section is a violation of section 213(d) and section 203 of the Act.

(b) Unless otherwise permitted by this subpart, during a period of conditional admission, the importer of a locomotive or locomotive engine may not:

(1) Operate the locomotive or locomotive engine in the United States;

(2) Sell or lease or offer the locomotive or locomotive engine for sale or lease.

(c) A locomotive or locomotive engine conditionally admitted pursuant to § 92.804 and not otherwise permanently exempted or excluded by the end of the period of conditional admission, or within such additional time as the Administrator and the U.S. Customs Service may allow, is deemed to be unlawfully imported into the United States in violation of section 213(d) and section 203 of the Act, unless the locomotive or locomotive engine has been delivered to the U.S. Customs Service for export or other disposition under applicable Customs laws and regulations by the end of the period of conditional admission. A locomotive or locomotive engine not so delivered is subject to seizure by the U.S. Customs Service.

(d) An importer who violates section 213(d) and section 203 of the Act is subject to a civil penalty under section 205 of the Act and § 92.1106. In addition to the penalty provided in the Act and § 92.1106, where applicable, a person or entity who imports an engine under the exemption provisions of § 92.804 and, who fails to deliver the locomotive or locomotive engine to the U.S. Customs Service by the end of the period of conditional admission is liable for liquidated damages in the amount of the bond required by applicable Customs laws and regulations.

Subpart J—Exclusion and Exemption Provisions

§ 92.901 Purpose and applicability.

The provisions of this subpart identify excluded locomotives (i.e., locomotives not covered by the Act) and allow for the exemption of locomotives and locomotive engines from certain provisions of this part. The applicability of the exclusions is described in § 92.903, and the applicability of the exemption allowances is described in §§ 92.904 through 92.909.

§ 92.902 Definitions.

The definitions of subpart A of this part apply to this subpart.

§ 92.903 Exclusions.

(a) Upon written request with supporting documentation, EPA will make written determinations as to whether certain locomotives are excluded from applicability of this part. Any locomotives that are determined to be excluded are not subject to the regulations under this part. Requests to determine whether certain locomotives are excluded should be sent to: Group Manager, Engine Compliance Programs Group, Engine Programs and Compliance Division U.S. Environmental Protection Agency, 6403–J, 1200 Pennsylvania Ave., NW., Washington, DC 20460.

(b) EPA will maintain a list of models of locomotives that have been determined to be excluded from coverage under this part. This list will be available to the public and may be obtained by writing to the address in paragraph (a) of this section.

(c) In addition to the locomotives excluded in paragraph (a) of this section, certain vehicles are not subject to the requirements and prohibitions of this

part because they are excluded from the definitions of ''locomotive'' and/or ''new locomotive'' in § 92.2.

§ 92.904 Exemptions.

(a) Except as specified otherwise in this subpart, the provisions of §§ 92.904 through 92.911 exempt certain new locomotives and new locomotive engines from the standards, other requirements, and prohibitions of this part, except for the requirements of this subpart and the requirements of § 92.1104.

(b)(1) Any person may request a testing exemption subject to the provisions of § 92.905.

(2) Any locomotive or locomotive engine manufacturer or remanufacturer may request a national security exemption subject to the provisions of § 92.908.

(3) Locomotive or locomotive engines manufactured or remanufactured for export purposes are exempt without application, subject to the provisions of § 92.909, except as otherwise specified by § 92.909.

(4) Manufacturer-owned and remanufacturer-owned locomotive or locomotive engines are exempt without application, subject to the provisions of § 92.906(a).

(5) Display locomotive or locomotive engines are exempt without application, subject to the provisions of § 92.906(b).

(6) Locomotive propulsion engines that are identical to engines that are covered by a certificate of conformity issued under 40 CFR part 89, and the locomotives in which they are used, are exempt, subject to the provisions of § 92.907.

§ 92.905 Testing exemption.

(a)(1) The Administrator may exempt from the standards and/or other requirements and prohibitions of this part new locomotives or new locomotive engines that are being used solely for the purpose of conducting a test program. Any person requesting an exemption for the purpose of conducting a test program must demonstrate the following:

(i) That the test program has a purpose which constitutes an appropriate basis for an exemption in accordance this section;

(ii) That the proposed test program necessitates the granting of an exemption;

(iii) That the proposed test program exhibits reasonableness in scope; and

(iv) That the proposed test program exhibits a degree of oversight and control consonant with the purpose of the test program and EPA's monitoring requirements.

(2) Paragraphs (b), (c), (d), and (e) of this section describe what constitutes a sufficient demonstration for each of the four elements identified in paragraphs (a)(1)(i) through (iv) of this section.

(b) With respect to the purpose of the proposed test program, an appropriate purpose would be research, investigations, studies, demonstrations, technology development, or training, but not national security. A concise statement of purpose is a required item of information.

(c) With respect to the necessity that an exemption be granted, necessity arises from an inability to achieve the stated purpose in a practicable manner without performing or causing to be performed one or more of the prohibited acts under § 92.1103. In appropriate circumstances, time constraints may be a sufficient basis for necessity, but the cost of certification alone, in the absence of extraordinary circumstances, is not a basis for necessity.

(d) With respect to reasonableness, a test program must exhibit a duration of reasonable length and affect a reasonable number of engines. In this regard, required items of information include:

(1) An estimate of the program's duration; and

(2) The maximum number of locomotives or locomotive engines involved.

(e) With respect to control, the test program must incorporate procedures consistent with the purpose of the test and be capable of affording EPA monitoring capability. As a minimum, required items of information include:

(1) The technical nature of the testing;

(2) The location(s) of the testing;

(3) The time, work, or mileage duration of the testing;

(4) The ownership arrangement with regard to the locomotives and engines involved in the testing;

(5) The intended final disposition of the locomotives and engines;

(6) The manner in which the locomotive or engine identification numbers will be identified, recorded, and made available; and

(7) The means or procedure whereby test results will be recorded.

(f) A manufacturer or remanufacturer of new locomotives or locomotive engines may request a testing exemption to cover locomotives or locomotive engines intended for use in test programs planned or anticipated over the course of a subsequent two-year period. Unless otherwise required by the Director, Engine Programs and Compliance Division, a manufacturer or remanufacturer requesting such an exemption need only furnish the information required by paragraphs (a)(1) and (d)(2) of this section along with a description of the recordkeeping and control procedures that will be employed to assure that the locomotives or locomotive engines are used for purposes consistent with paragraph (a) of this section.

(g) For locomotives being used for the purpose of developing a fundamentally new emission control technology related either to an alternative fuel or an aftertreatment device, the Administrator may exempt the locomotive from some or all of the applicable standards of this part for the full useful life of the locomotive, subject to the provisions of paragraphs (a) through (f) of this section.

§ 92.906 Manufacturer-owned, remanufacturer-owned exemption and display exemption.

(a) Any manufacturer-owned or remanufacturer-owned locomotive or locomotive engine is exempt from § 92.1103, without application, if the manufacturer complies with the following terms and conditions:

(1) The manufacturer or remanufacturer must establish, maintain, and retain the following adequately organized and indexed information on each exempted locomotive or locomotive engine:

(i) Locomotive or engine identification number;

(ii) Use of the locomotive or engine on exempt status; and

(iii) Final disposition of any locomotive or engine removed from exempt status.

(2) The manufacturer or remanufacturer must provide right of entry and access to these records to EPA Enforcement Officers as outlined in § 92.208.

(3) The manufacturer or remanufacturer must permanently affix a label to each locomotive or locomotive engine on exempt status, unless the requirement is waived or an alternate procedure is approved by the Director, Engine Programs and Compliance Division. This label should:

(i) Be affixed in a readily visible portion of the locomotive or locomotive engine;

(ii) Be attached in such a manner that cannot be removed without destruction or defacement;

(iii) State in the English language and in block letters and numerals of a color that contrasts with the background of the label, the following information:

(A) The label heading ''Emission Control Information'';

(B) Full corporate name and trademark of manufacturer or remanufacturer;

(C) Engine displacement, engine family identification, and model year of engine; or person of office to be contacted for further information about the engine;

(D) The statement ''This locomotive or locomotive engine is exempt from the prohibitions of 40 CFR 92.1103.''

(4) No provision of paragraph (a)(3) of this section prevents a manufacturer or remanufacturer from including any other information it desires on the label.

(5) The locomotive or locomotive engine is not used in revenue-generating service, or sold.

(b) Display exemption. An uncertified locomotive or locomotive engine that is to be used solely for display purposes, and that will only be operated incident and necessary to the display purpose, and will not be sold unless an applicable certificate of conformity has

been obtained for the locomotive or engine, is exempt without request from the standards of this part.

[63 FR 18998, Apr. 16, 1998, as amended at 70 FR 40457, July 13, 2005]

§ 92.907 Non-locomotive-specific engine exemption.

(a) For manufacturers selling non-locomotive-specific engines to be used as propulsion engines in remanufactured locomotives, such locomotives and engines are exempt, provided:

(1) The engines are covered by a certificate of conformity issued under 40 CFR part 89;

(2) More engines are reasonably projected to be sold and used under the certificate for non-locomotive use than for use in locomotives;

(3) The number of such engines exempted under this paragraph (a) does not exceed:

(i) 50 per manufacturer in any calendar year, where EPA determines that the use of the non-locomotive-specific engines will result in a significantly greater degree of emission control over the lifetime of the locomotive than using remanufactured engines certified under this part 92; or

(ii) 25 per manufacturer in any calendar year, where EPA has not determined that the use of the non-locomotive-specific engines will result in a significantly greater degree of emission control over the lifetime of the locomotive than using remanufactured engines certified under this part 92;

(4) The Administrator has approved the exemption as specified in paragraph (e) of this section.

(b) For manufacturers of freshly manufactured switch locomotives powered by non-locomotive-specific engines, such freshly manufactured switch locomotives are exempt, provided:

(1) The engines are covered by a certificate of conformity issued under 40 CFR part 89;

(2) More engines are reasonably projected to be sold and used under the certificate for non-locomotive use than for use in locomotives;

(3) The number of such locomotives sold or leased by the locomotive manufacturer within any three-year period, and exempted under this paragraph (b) does not exceed 30; and

(4) The Administrator has approved the exemption as specified in paragraph (e) of this section.

(c)(1) The remanufacture of locomotive engines that have been exempted under this section is exempt without request provided that the remanufacturer remanufactures them to a previously-certified configuration, or to be equivalent to engines that have been previously certified under this part or 40 CFR part 89.

(2) The remanufacture of non-locomotive-specific engines that were used in locomotives prior to January 1, 2000 is exempt from the requirements of this part provided: The remanufacturer remanufactures them to be equivalent to engines that have been previously certified under this part or 40 CFR part 89, or demonstrates that the NO_X emissions from the remanufactured locomotive engine are at least 40 percent less than its emissions prior to certification; and the Administrator has approved the exemption as specified in paragraph (e) of this section.

(d) Manufacturers and remanufacturers of engines and/or locomotives exempted under this section shall:

(1) Report annually to EPA the number of engines exempted under paragraph (a) of this section;

(2) Report annually to EPA the number of locomotives exempted under paragraph (b) of this section; and

(3) Upon the Administrator's request, provide test data showing the emissions of the engine or locomotive when it is operated at the actual in-use locomotive power points.

(e)(1) Manufacturers and remanufacturers seeking an exemption under this section shall notify the Administrator of such intent at least 90 days prior to selling or placing into service the locomotives or locomotive engines.

(2) The Administrator shall deny a non-locomotive-specific exemption in any case where he/she has evidence that approving such an exemption would be inappropriate because of adverse environmental or economic impacts.

(3) When denying an exemption, the Administrator shall notify the manufacturer or remanufacturer of EPA's

decision to deny or consider denying the exemption within 60 days of the manufacturer's or remanufacturer's notification in paragraph (e)(1) of this section.

(4) Unless the Administrator notifies the manufacturer or remanufacturer of EPA's decision to deny or consider denying the exemption within 60 days of the manufacturer's or remanufacturer's notification in paragraph (e)(1) of this section, the exemption shall be considered approved 90 days of the manufacturer's or remanufacturer's notification.

[63 FR 18998, Apr. 16, 1998, as amended at 70 FR 40457, July 13, 2005]

§ 92.908 National security exemption.

A manufacturer or remanufacturer requesting a national security exemption must state the purpose for which the exemption is required and the request must be endorsed by an agency of the federal government charged with responsibility for national defense.

§ 92.909 Export exemptions.

(a) A new locomotive or locomotive engine intended solely for export, and so labeled or tagged on the outside of any container, the locomotive and on the engine itself, is subject to the provisions of § 92.1103, unless the importing country has new locomotive or new locomotive engine emission standards which differ from EPA standards.

(b) For the purpose of paragraph (a) of this section, a country having no standards whatsoever is deemed to be a country having emission standards which differ from EPA standards.

(c) It is a condition of any exemption for the purpose of export under paragraph (a) of this section, that such exemption is void *ab initio* with respect to a new locomotive or locomotive engine intended solely for export, where such locomotive or locomotive engine is sold, or offered for sale, to an ultimate purchaser or otherwise distributed or introduced into commerce in the United States for purposes other than export.

§ 92.910 Granting of exemptions.

(a) If upon completion of the review of an exemption request made pursuant to § 92.905 or § 92.908, EPA determines it is appropriate to grant such an exemption, a memorandum of exemption is to be prepared and submitted to the person requesting the exemption. The memorandum is to set forth the basis for the exemption, its scope, and such terms and conditions as are deemed necessary. Such terms and conditions generally include, but are not limited to, agreements by the applicant to conduct the exempt activity in the manner described to EPA, create and maintain adequate records accessible to EPA at reasonable times, employ labels for the exempt locomotives or engines setting forth the nature of the exemption, take appropriate measures to assure that the terms of the exemption are met, and advise EPA of the termination of the activity and the ultimate disposition of the locomotives or engines.

(b) Any exemption granted pursuant to paragraph (a) of this section is deemed to cover any subject locomotive or engine only to the extent that the specified terms and conditions are complied with. A breach of any term or condition causes the exemption to be void ab initio with respect to any locomotive or engine. Consequently, the causing or the performing of an act prohibited under § 92.1103(a)(1) or (a)(3), other than in strict conformity with all terms and conditions of this exemption, renders the person to whom the exemption is granted, and any other person to whom the provisions of § 92.1103(a) are applicable, liable to suit under sections 204 and 205 of the Act.

EFFECTIVE DATE NOTE: At 63 FR 19077, Apr. 16, 1998, § 92.910 was added. This section contains information collection and recordkeeping requirements and will not become effective until approval has been given by the Office of Management and Budget.

§ 92.911 Submission of exemption requests.

Requests for exemption or further information concerning exemptions and/or the exemption request review procedure should be addressed to: Group Manager, Engine Compliance Programs Group, Engine Programs and Compliance Division U.S. Environmental Protection Agency, 6403-J, 1200 Pennsylvania Ave., NW., Washington, DC 20460.

§ 92.912 Staged-assembly exemption.

You may ask us to provide a temporary exemption to allow you to complete production of your engines at different facilities, as long as you maintain control of the engines until they are in their certified configuration. We may require you to take specific steps to ensure that such engines are in their certified configuration before reaching the ultimate purchaser. You may request an exemption under this section in your application for certification, or in a separate submission.

[70 FR 40457, July 13, 2005]

Subpart K—Requirements Applicable to Owners and Operators of Locomotives and Locomotive Engines

§ 92.1001 Applicability.

The requirements of this subpart are applicable to railroads and all other owners and operators of locomotives and locomotive engines subject to the provisions of subpart A of this part, except as otherwise specified.

§ 92.1002 Definitions.

The definitions of subpart A of this part apply to this subpart.

§ 92.1003 In-use testing program.

(a) *Applicability*. This section applies to all Class I freight railroads, beginning on January 1, 2005.

(b) *Testing requirements*. Each railroad subject to the provisions of this section shall annually test a sample of locomotives in its fleet. For the purpose of this section, a railroad's fleet includes both the locomotives that it owns and the locomotives that it is leasing.

(1)(i) Except as specified in paragraphs (b)(1) (ii) and (iii) of this section, the number of locomotives to be tested shall be at least 0.15 percent of the average number of locomotives in the railroad's fleet during the previous calendar year (i.e., the number tested shall be 0.0015 multiplied by the number of locomotives in the fleet, rounded up to the next whole number).

(ii) After December 31, 2015, the number of locomotives to be tested by railroads with 500 or more locomotives shall be at least 0.10 percent of the average number of locomotives in the railroad's fleet during the previous calendar year (i.e., the number tested shall be 0.0010 multiplied by the number of locomotives in the fleet, rounded up to the next whole number). After December 31, 2015, the number of locomotives to be tested by railroads with fewer than 500 locomotives shall be zero. The provisions of this paragraph (b)(1)(ii) apply only when:

(A) No new locomotive emission standards have taken effect during the previous 5 years;

(B) Locomotive emission controls have not changed fundamentally, during the previous 5 years, in any manner that could reasonably be expected to have the potential to significantly affect emissions durability; and

(C) Testing during the previous 5 years has shown, to the satisfaction of the Administrator, that the degree of noncompliance for tested locomotives is low enough that the higher rate of testing specified in paragraph (b)(1)(i) of this section is not needed.

(iii) The Administrator may allow a railroad to perform a smaller number of tests than specified in paragraphs (b)(1) (i) or (ii) of this section, where he/she determines that the number of tests specified in paragraphs (b)(1)(i) or (ii) of this section is not necessary.

(2) Testing shall be performed according to the test procedures in subpart B of this part, unless otherwise approved by the Administrator.

(c) *Test locomotive selection*. (1)(i) A representative sample of locomotives shall be randomly selected for testing.

(ii) Unless otherwise specified by the Administrator, the selection shall be made by the railroad.

(iii) The railroad shall select locomotives from each manufacturer and remanufacturer, and from each tier level (e.g., Tier 0, Tier 1 and Tier 2) in proportion to their numbers in the railroad's fleet, except where specified or allowed otherwise by the Administrator.

(iv) Locomotives tested during the previous year shall be excluded from the sample.

(v) Locomotives may not be excluded from the sample because of visible

smoke, a history of durability problems, or other evidence of malmaintenance.

(2)(i) Locomotives selected for testing according to the provisions of this section shall have been certified in compliance with requirements in subpart A of this part, and shall have been operated for at least 100 percent of their useful lives.

(ii) Where the number of locomotives that have been operated for at least 100 percent of their useful lives is not large enough to fulfill the testing requirement, locomotives still within their useful lives shall be tested. In this case, the locomotives must have been operated longer than at least 80 percent of the locomotives in the railroad's fleet.

(3) Where specified by the Administrator, the railroad shall test specified locomotives in its fleet, including locomotives that do not meet the criteria specified in paragraph (c)(2) of this section.

(d) *Reporting requirements*. All testing done in compliance with the provisions of this section shall be reported to EPA within thirty calendar days of the end of each year. At a minimum, each report shall contain the following:

(1) Full corporate name and address of the railroad providing the report.

(2) For each locomotive tested, the following:

(i) Corporate name of the manufacturer and last remanufacturer(s) (including both certificate holder and installer, where different) of the locomotive, and the corporate name of the manufacturer or last remanufacturer(s) of the engine if different than that of the manufacturer or remanufacturer(s) of the locomotive;

(ii) Year, and if known month of original manufacture of the locomotive and the engine, and the manufacturer's model designation of the locomotive and manufacturer's model designation of the engine, and the locomotive identification number;

(iii) Year, and if known month that the engine last underwent remanufacture, and the engine remanufacturer's designation which either reflects, or most closely reflects, the engine after the last remanufacture, and the engine family identification;

(iv) The number of MW-hrs and miles (where available) the locomotive has been operated since its last remanufacture; and

(v) The emission test results for all measured pollutants.

(e) Any railroad that performed no emission testing during a given year is exempt from the reporting requirements described in paragraph (d) of this section for that year.

(f) In lieu of some or all of the test data required by this section, railroads may submit equivalent emission data collected for other purposes. The Administrator may also allow emission data collected using other testing or sampling procedures to be submitted in lieu of some or part of the data required by this section with advance approval.

(g) All reports submitted to EPA in compliance with the provisions of this subpart must be addressed to: Group Manager, Engine Compliance Programs Group, Engine Programs and Compliance Division 6403–J, Environmental Protection Agency, 1200 Pennsylvania Ave., NW., Washington, DC 20460.

§ 92.1004 Maintenance and repair.

(a) Unless otherwise approved by the Administrator, all owners of locomotives subject to the provisions of this part shall ensure that all emission-related maintenance is performed on the locomotives, as specified in the maintenance instructions provided by the certifying manufacturer or remanufacturer in compliance with § 92.211 (or maintenance that is equivalent to the maintenance specified by the certifying manufacturer or remanufacturer in terms of maintaining emissions performance).

(b) Unless otherwise approved by the Administrator, all maintenance and repair of locomotives and locomotive engines subject to the provisions of this part performed by any owner, operator or other maintenance provider, including maintenance that is not covered by paragraph (a) of this section, shall be performed, using good engineering judgement, in such a manner that the

locomotive or locomotive engine continues (after the maintenance or repair) to the meet the emission standards or family emission limits (as applicable) it was certified as meeting prior to the need for maintenance or repair.

(c) The owner of the locomotive shall maintain records of all maintenance and repair that could reasonably affect the emission performance of any locomotive or locomotive engine subject to the provision of this part.

§ 92.1005 In-use locomotives.

(a)(1) Any Class I railroad subject to the provisions of this subpart shall supply to the Administrator, upon request, in-use locomotives, selected by the Administrator. The number of locomotives which the Administrator requests under this paragraph (a)(1) shall not exceed five locomotives per railroad per calendar year. These locomotives or engines shall be supplied for testing at such reasonable time and place and for such reasonable periods as the Administrator may require. The Administrator shall make reasonable allowances to the railroad to schedule the supply of locomotives for testing in such a manner that it minimizes disruption of its operational schedule.

(2) Any non-Class I railroad or other entity subject to the provisions of this subpart shall supply to the Administrator, upon request, in-use locomotives, selected by the Administrator. The number of locomotives which the Administrator requests under this paragraph (a)(2) shall not exceed two locomotives per railroad (or other entity) per calendar year. These locomotives or engines shall be supplied for testing at such reasonable time and place and for such reasonable periods as the Administrator may require. The Administrator shall make reasonable allowances to the railroad or other entity to schedule the supply of locomotives for testing in such a manner that it minimizes disruption of its operational schedule. The Administrator shall request locomotives under this paragraph (a)(2) only for purposes which cannot be accomplished using locomotives supplied under paragraph (a)(1) of this section.

(b) Any railroad or other entity subject to the provisions of this subpart shall make reasonable efforts to supply manufacturers and remanufacturers of locomotives and locomotive engines with the test locomotives and locomotive engines needed to fulfill the in-use testing requirements contained in subpart G of this part.

§ 92.1006 Refueling requirements.

(a) Refueling equipment used by a locomotive operator for locomotives fueled with a volatile fuel shall be designed in such a manner so as not to render inoperative or reduce the effectiveness of the controls on the locomotive that are intended to minimize the escape of fuel vapors.

(b) Hoses used to refuel gaseous-fueled locomotives shall not be designed to be bled or vented to the atmosphere under normal operating conditions.

§ 92.1007 Remanufacturing requirements.

(a) See the definition of ''remanufacture'' in § 92.2 to determine if you are remanufacturing your locomotive or engine. (NOTE: Replacing power assemblies one at a time may qualify as remanufacturing, depending on the interval between replacement.)

(b) See the definition of ''new'' in § 92.2 to determine if remanufacturing your locomotive makes it subject to the requirements of this part. If the locomotive is considered to be new, it is subject to the certification requirements of this part, unless it is exempt under subpart J of this part. The standards to which your locomotive is subject will depend on factors such as the following:

(1) Its date of original manufacture.

(2) The FEL to which it was previously certified, which is listed on the ''Locomotive Emission Control Information'' label.

(3) Its power rating (whether it is above or below 2300 hp).

(4) The calendar year in which it is being remanufactured.

(c) You may comply with the certification requirements of this part for your remanufactured locomotive by either obtaining your own certificate of conformity as specified in subpart C of

this part or by having a certifying remanufacturer include your locomotive under its certificate of conformity. In either case, your remanufactured locomotive must be covered by a certificate before it is reintroduced into service.

(d) If you do not obtain your own certificate of conformity from EPA, contact a certifying remanufacturer to have your locomotive included under its certificate of conformity. Confirm with the certificate holder that your locomotive's model, date of original manufacture, previous FEL, and power rating allow it to be covered by the certificate. You must do all of the following:

(1) Comply with the certificate holder's emission-related installation instructions.

(2) Provide to the certificate holder the information it identifies as necessary to comply with the requirements of this part.

(e) For parts unrelated to emissions and emission-related parts not addressed by the certificate holder in the emission-related installation instructions, you may use parts from any source. For emission-related parts listed by the certificate holder in the emission-related installation instructions, you must either use the specified parts or parts certified under 40 CFR 1033.645 for remanufacturing. If you believe that the certificate holder has included as emission-related parts, parts that are actually unrelated to emissions, you may ask us to exclude such parts from the emission-related installation instructions. (NOTE: This paragraph (e) does not apply with respect to parts for maintenance other than remanufacturing; see § 92.1004 for provisions related to general maintenance.)

(f) Failure to comply with this section is a violation of § 92.1102(a)(1).

[73 FR 37195, June 30, 2008]

Subpart L—General Enforcement Provisions and Prohibited Acts

§ 92.1101 Applicability.

The requirements of this subpart are applicable to all manufacturers, remanufacturers, owners and operators of locomotives and locomotive engines subject to the provisions of subpart A of this part.

§ 92.1102 Definitions.

The definitions of subpart A of this part apply to this subpart.

§ 92.1103 Prohibited acts.

(a) The following acts and the causing thereof are prohibited:

(1)(i)(A) In the case of a manufacturer or remanufacturer of new locomotives or new locomotive engines, the sale, the offering for sale, the introduction into commerce, the delivery for introduction into commerce, or the distribution in commerce of any new locomotive or new locomotive engine manufactured or remanufactured after the effective date of applicable emission standards under this part, unless such locomotive or locomotive engine is covered by a certificate of conformity issued (and in effect) under regulations found in this part. (Introduction into commerce includes placement of a new locomotive or new locomotive engine back into service following remanufacturing.)

(B) The manufacture or remanufacture of a locomotive or locomotive engine for the purpose of an act listed in paragraph (a)(1)(i)(A) of this section unless such locomotive or locomotive engine is covered by a certificate of conformity issued (and in effect) under regulations found in this part prior to its introduction into commerce.

(ii) In the case of any person, except as provided in Subpart I of this part, the importation into the United States of any locomotive or locomotive engine manufactured or remanufactured after June 15, 1998, unless such locomotive or locomotive engine is covered by a certificate of conformity issued (and in effect) under regulations found in this part.

(2)(i) For a person to fail or refuse to permit access to or copying of records or to fail to make reports or provide information required under this part.

(ii) For a person to fail or refuse to permit entry, testing, or inspection authorized under this part.

(iii) For a person to fail or refuse to perform tests, or to have tests performed as required by this part.

(iv) For a person to fail to establish or maintain records as required under this part.

(3)(i) For a person to remove or render inoperative a device or element of design installed on or in a locomotive or locomotive engine in compliance with regulations under this part, or to set any adjustable parameter to a setting outside of the range specified by the manufacturer or remanufacturer, as approved in the application for certification by the Administrator.

(ii) For a person to manufacture, remanufacture, sell or offer to sell, or install, a part or component intended for use with, or as part of, a locomotive or locomotive engine, where a principal effect of the part or component is to bypass, defeat, or render inoperative a device or element of design installed on or in a locomotive or locomotive engine in compliance with regulations issued under this part, and where the person knows or should know that the part or component is being offered for sale or installed for this use or put to such use.

(iii) For a locomotive owner or operator to fail to comply with the maintenance and repair requirements of §92.1004.

(4) For a manufacturer or a remanufacturer of a new locomotive or locomotive engine subject to standards prescribed under this part:

(i) To sell, offer for sale, or introduce or deliver for introduction into commerce, a new locomotive or new locomotive engine unless the manufacturer or remanufacturer has complied with the requirements of §92.1107.

(ii) To sell, offer for sale, or introduce or deliver for introduction into commerce, a new locomotive or new locomotive engine unless all required labels and tags are affixed to the engine in accordance with §92.212.

(iii) To fail or refuse to comply with the requirements of §92.1108.

(iv) Except as provided in §92.211, to provide directly or indirectly in any communication to the ultimate purchaser or a subsequent purchaser that the coverage of a warranty under the Act is conditioned upon use of a part, component, or system manufactured by the manufacturer or remanufacturer or a person acting for the manufacturer or remanufacturer or under its control, or conditioned upon service performed by such persons.

(v) To fail or refuse to comply with the terms and conditions of the warranty under §92.1107.

(5) For a manufacturer or remanufacturer of locomotives to distribute in commerce, sell, offer for sale, or deliver for introduction into commerce new locomotives (including all locomotives which contain a new engine) not covered by a certificate of conformity.

(b) For the purposes of enforcement of this part, the following apply:

(1) Nothing in paragraph (a)(3) of this section is to be construed to require the use of any manufacturer's or remanufacturer's parts in maintaining or repairing a locomotive or locomotive engine.

(2) Actions for the purpose of repair or replacement of a device or element of design or any other item are not considered prohibited acts under paragraph (a)(3)(i) of this section if the action is a necessary and temporary procedure, the device or element is replaced upon completion of the procedure, and the action results in the proper functioning of the device or element of design.

(3) Actions for the purpose of remanufacturing a locomotive are not considered prohibited acts under paragraph (a)(3)(i) of this section if the new remanufactured locomotive is covered by a certificate of conformity and complies with all applicable requirements of this part.

§92.1104 General enforcement provisions.

(a) *Information collection provisions.* (1)(i) Every manufacturer or remanufacturer of new locomotives and/or new locomotive engines and other persons subject to the requirements of this part must establish and maintain records, perform tests, make reports and provide information the Administrator may reasonably require to determine whether the manufacturer or remanufacturer or other person has acted or is acting in compliance with this part or to otherwise carry out the provisions of this part, and must, upon request of an officer or employee duly designated

by the Administrator, permit the officer or employee at reasonable times to have access to and copy such records. The manufacturer or remanufacturer shall comply in all respects with the requirements of subpart E of this part.

(ii) Every manufacturer, remanufacturer, owner, or operator of locomotives or locomotive engines exempted from the standards or requirements of this part must establish and maintain records, perform tests, make reports and provide information the Administrator may reasonably require regarding the emissions of such locomotives or locomotive engines.

(2) For purposes of enforcement of this part, an officer or employee duly designated by the Administrator, upon presenting appropriate credentials, is authorized:

(i) To enter, at reasonable times, any establishment of the manufacturer or remanufacturer, or of any person whom the manufacturer or remanufacturer engaged to perform any activity required under paragraph (a)(1) of this section, for the purposes of inspecting or observing any activity conducted pursuant to paragraph (a)(1) of this section; and

(ii) To inspect records, files, papers, processes, controls, and facilities used in performing an activity required by paragraph (a)(1) of this section, by the manufacturer or remanufacturer or by a person whom the manufacturer or remanufacturer engaged to perform the activity.

(b) *Exemption provision*. The Administrator may exempt a new locomotive or new locomotive engine from § 92.1103 upon such terms and conditions as the Administrator may find necessary for the purpose of export, research, investigations, studies, demonstrations, or training, or for reasons of national security, or for other purposes allowed by subpart J of this part.

(c) *Importation provision*. (1) A new locomotive or locomotive engine, offered for importation or imported by a person in violation of § 92.1103 is to be refused admission into the United States, but the Secretary of the Treasury and the Administrator may, by joint regulation, provide for deferring a final determination as to admission and authorizing the delivery of such a locomotive or locomotive engine offered for import to the owner or consignee thereof upon such terms and conditions (including the furnishing of a bond) as may appear to them appropriate to insure that the locomotive or locomotive engine will be brought into conformity with the standards, requirements, and limitations applicable to it under this part.

(2) If a locomotive or locomotive engine is finally refused admission under this paragraph (c), the Secretary of the Treasury shall cause disposition thereof in accordance with the customs laws unless it is exported, under regulations prescribed by the Secretary, within 90 days of the date of notice of the refusal or additional time as may be permitted pursuant to the regulations.

(3) Disposition in accordance with the customs laws may not be made in such manner as may result, directly or indirectly, in the sale, to the ultimate consumer, of a new locomotive or locomotive engine that fails to comply with applicable standards of the Administrator under this part.

(d) *Export provision*. A new locomotive or locomotive engine intended solely for export, and so labeled or tagged on the outside of the container if used and on the engine, shall be subject to the provisions of § 92.1103, except that if the country that is to receive the locomotive or locomotive engine has emission standards that differ from the standards prescribed under subpart A of this part, then the locomotive or locomotive engine must comply with the standards of the country that is to receive the locomotive or locomotive engine.

(e) *Recordkeeping*. Except where specified otherwise, records required by this part must be kept for eight (8) years.

§ 92.1105 Injunction proceedings for prohibited acts.

(a) The district courts of the United States have jurisdiction to restrain violations of § 92.1103(a).

(b) Actions to restrain violations of § 92.1103(a) must be brought by and in the name of the United States. In an action, subpoenas for witnesses who are required to attend a district court in any district may run into any other district.

§92.1106 Penalties.

(a) *Violations.* A violation of the requirements of this subpart is a violation of the applicable provisions of the Act, including sections 213(d) and 203, and is subject to the penalty provisions thereunder.

(1) A person who violates §92.1103 (a)(1), (a)(4), or (a)(5), or a manufacturer, remanufacturer, dealer or railroad who violates §92.1103(a)(3)(i) or (iii) is subject to a civil penalty of not more than $32,500 for each violation.

(2) A person other than a manufacturer, remanufacturer, dealer, or railroad who violates §92.1103(a)(3)(i) or any person who violates §92.1103(a)(3)(ii) is subject to a civil penalty of not more than $2,750 for each violation.

(3) A violation with respect to §92.1103(a)(1), (a)(3)(i), (a)(3)(iii), (a)(4), or (a)(5) constitutes a separate offense with respect to each locomotive or locomotive engine.

(4) A violation with respect to §92.1103(a)(3)(ii) constitutes a separate offense with respect to each part or component. Each day of a violation with respect to §92.1103(a)(5) constitutes a separate offense.

(5) A person who violates §92.1103(a)(2) is subject to a civil penalty of not more than $32,500 per day of violation.

(6) The maximum penalty values listed in this section are shown for calendar year 2004. Maximum penalty limits for later years may be adjusted based on the Consumer Price Index. The specific regulatory provisions for changing the maximum penalties, published in 40 CFR part 19, reference the applicable U.S. Code citation on which the prohibited action is based.

(b) *Civil actions.* The Administrator may commence a civil action to assess and recover any civil penalty under paragraph (a) of this section.

(1) An action under this paragraph (b) may be brought in the district court of the United States for the district in which the defendant resides or has the Administrator's principal place of business, and the court has jurisdiction to assess a civil penalty.

(2) In determining the amount of a civil penalty to be assessed under this paragraph (b), the court is to take into account the gravity of the violation, the economic benefit or savings (if any) resulting from the violation, the size of the violator's business, the violator's history of compliance with Title II of the Act, action taken to remedy the violation, the effect of the penalty on the violator's ability to continue in business, and such other matters as justice may require.

(3) In any such action, subpoenas for witnesses who are required to attend a district court in any district may run into any other district.

(c) *Administrative assessment of certain penalties*—(1) *Administrative penalty authority.* In lieu of commencing a civil action under paragraph (b) of this section, the Administrator may assess any civil penalty prescribed in paragraph (a) of this section, except that the maximum amount of penalty sought against each violator in a penalty assessment proceeding shall not exceed $270,000, unless the Administrator and the Attorney General jointly determine that a matter involving a larger penalty amount is appropriate for administrative penalty assessment. Any such determination by the Administrator and the Attorney General is not subject to judicial review. Assessment of a civil penalty shall be by an order made on the record after opportunity for a hearing held in accordance with the procedures found at part 22 of this chapter. The Administrator may compromise, or remit, with or without conditions, any administrative penalty which may be imposed under this section.

(2) *Determining amount.* In determining the amount of any civil penalty assessed under this paragraph (c), the Administrator shall take into account the gravity of the violation, the economic benefit or savings (if any) resulting from the violation, the size of the violator's business, the violator's history of compliance with Title II of the Act, action taken to remedy the violation, the effect of the penalty on the violator's ability to continue in business, and such other matters as justice may require.

(3) *Effect of administrator's action.* (i) Action by the Administrator under this paragraph (c) does not affect or limit

the Administrator's authority to enforce any provisions of the Act; except that any violation with respect to which the Administrator has commenced and is diligently prosecuting an action under this paragraph (c), or for which the Administrator has issued a final order not subject to further judicial review and for which the violator has paid a penalty assessment under this paragraph shall not be the subject of a civil penalty action under paragraph (b) of this section.

(ii) No action by the Administrator under this paragraph (c) shall affect a person's obligation to comply with a section of this part.

(4) *Finality of order*. An order issued under this paragraph (c) is to become final 30 days after its issuance unless a petition for judicial review is filed under paragraph (c)(5) of this section.

(5) *Judicial review*. A person against whom a civil penalty is assessed in accordance with this paragraph (c) may seek review of the assessment in the United States District Court for the District of Columbia or for the district in which the violation is alleged to have occurred, in which such person resides, or where the person's principal place of business is located, within the 30-day period beginning on the date a civil penalty order is issued. The person shall simultaneously send a copy of the filing by certified mail to the Administrator and the Attorney General. The Administrator shall file in the court within 30 days a certified copy, or certified index, as appropriate, of the record on which the order was issued. The court is not to set aside or remand any order issued in accordance with the requirements of this paragraph (c) unless substantial evidence does not exist in the record, taken as a whole, to support the finding of a violation or unless the Administrator's assessment of the penalty constitutes an abuse of discretion, and the court is not to impose additional civil penalties unless the Administrator's assessment of the penalty constitutes an abuse of discretion. In any proceedings, the United States may seek to recover civil penalties assessed under this section.

(6) *Collection*. (i) If any person fails to pay an assessment of a civil penalty imposed by the Administrator as provided in this part after the order making the assessment has become final or after a court in an action brought under paragraph (c)(5) of this section has entered a final judgment in favor of the Administrator, the Administrator shall request that the Attorney General bring a civil action in an appropriate district court to recover the amount assessed (plus interest at rates established pursuant to section 6621(a)(2) of the Internal Revenue Code of 1986 (26 U.S.C. 6621(a)(2)) from the date of the final order or the date of final judgment, as the case may be). In such an action, the validity, amount, and appropriateness of the penalty is not subject to review.

(ii) A person who fails to pay on a timely basis the amount of an assessment of a civil penalty as described in paragraph (c)(6)(i) of this section shall be required to pay, in addition to that amount and interest, the United States' enforcement expenses, including attorney's fees and costs for collection proceedings, and a quarterly nonpayment penalty for each quarter during which the failure to pay persists. The nonpayment penalty is an amount equal to ten percent of the aggregate amount of that person's penalties and nonpayment penalties which are unpaid as of the beginning of such quarter.

[63 FR 18998, Apr. 16, 1998, as amended at 70 FR 40457, July 13, 2005]

§ 92.1107 Warranty provisions.

(a) The manufacturer or remanufacturer of each locomotive or locomotive engine must warrant to the ultimate purchaser and each subsequent purchaser or owner that the locomotive or locomotive engine is designed, built, and equipped so as to conform at the time of sale or time of return to service following remanufacture with applicable regulations under section 213 of the Act, and is free from defects in materials and workmanship which cause such locomotive or locomotive engine to fail to conform with applicable regulations for its warranty period (as determined under § 92.10).

(b) For the purposes of this section, the owner of any locomotive or locomotive engine warranted under this

part is responsible for the proper maintenance of the locomotive and the locomotive engine. Proper maintenance includes replacement and/or service, as needed, at the owner's expense at a service establishment or facility of the owner's choosing, of all parts, items, or devices which were in general use with locomotives or locomotive engines prior to 1999. For diesel engines, this would generally include replacement or cleaning of the fuel delivery and injection system.

§92.1108 In-use compliance provisions.

(a) Effective with respect to locomotives and locomotive engines subject to the requirements of this part:

(1) If the Administrator determines that a substantial number of any class or category of locomotives or locomotive engines, although properly maintained and used, do not conform to the regulations prescribed under section 213 of the Act when in actual use throughout their useful life period (as defined under §92.2), the Administrator shall immediately notify the manufacturer or remanufacturer of such nonconformity and require the manufacturer or remanufacturer to submit a plan for remedying the nonconformity of the locomotives or locomotive engines with respect to which such notification is given.

(i) The manufacturer's or remanufacturer's plan shall provide that the nonconformity of any such locomotives or locomotive engines which are properly used and maintained will be remedied at the expense of the manufacturer or remanufacturer.

(ii) If the manufacturer or remanufacturer disagrees with such determination of nonconformity and so advises the Administrator, the Administrator shall afford the manufacturer or remanufacturer and other interested persons an opportunity to present their views and evidence in support thereof at a public hearing. Unless, as a result of such hearing, the Administrator withdraws such determination of nonconformity, the Administrator shall, within 60 days after the completion of such hearing, order the manufacturer or remanufacturer to provide prompt notification of such nonconformity in accordance with paragraph (a)(2) of this section. The manufacturer or remanufacturer shall comply in all respects with the requirements of subpart G of this part.

(2) Any notification required to be given by the manufacturer or remanufacturer under paragraph (a)(1) of this section with respect to any class or category of locomotives or locomotive engines shall be given to ultimate purchasers, subsequent purchasers (if known), and dealers (as applicable) in such manner and containing such information as required in Subparts E and H of this part.

(3)(i) The certifying manufacturer or remanufacturer shall furnish with each new locomotive or locomotive engine written instructions for the proper maintenance and use of the engine by the ultimate purchaser as required under §92.211.

(ii) The instruction under paragraph (a)(3)(i) of this section must not include any condition on the ultimate purchaser's using, in connection with such locomotive or locomotive engine, any component or service (other than a component or service provided without charge under the terms of the purchase agreement) which is identified by brand, trade, or corporate name. Such instructions also must not directly or indirectly distinguish between service performed by the franchised dealers of such manufacturer or remanufacturer, or any other service establishments with which such manufacturer or remanufacturer has a commercial relationship, and service performed by independent locomotive or locomotive engine repair facilities with which such manufacturer or remanufacturer has no commercial relationship.

(iii) The prohibition of paragraph (a)(3)(ii) of this section may be waived by the Administrator if:

(A) The manufacturer or remanufacturer satisfies the Administrator that the locomotive or locomotive engine will function properly only if the component or service so identified is used in connection with such engine; and

(B) The Administrator finds that such a waiver is in the public interest.

(iv) In addition, the manufacturer or remanufacturer shall indicate by

means of a label or tag permanently affixed to the locomotive and to the engine that the locomotive and/or the locomotive engine is covered by a certificate of conformity issued for the purpose of assuring achievement of emission standards prescribed under section 213 of the Act. This label or tag shall also contain information relating to control of emissions as prescribed under § 92.212.

(b) The manufacturer or remanufacturer bears all cost obligation any dealer incurs as a result of a requirement imposed by paragraph (a) of this section. The transfer of any such cost obligation from a manufacturer or remanufacturer to a dealer through franchise or other agreement is prohibited.

(c) If a manufacturer or remanufacturer includes in an advertisement a statement respecting the cost or value of emission control devices or systems, the manufacturer or remanufacturer shall set forth in the statement the cost or value attributed to these devices or systems by the Secretary of Labor (through the Bureau of Labor Statistics). The Secretary of Labor, and his or her representatives, has the same access for this purpose to the books, documents, papers, and records of a manufacturer or remanufacturer as the Comptroller General has to those of a recipient of assistance for purposes of section 311 of the Act.

APPENDIX I TO PART 92—EMISSION RELATED LOCOMOTIVE AND ENGINE PARAMETERS AND SPECIFICATIONS

I. Basic Engine Parameters—Reciprocating Engines.
  1. Compression ratio.
  2. Type of air aspiration (natural, Roots blown, supercharged, turbocharged).
  3. Valves (intake and exhaust).
    a. Head diameter dimension.
    b. Valve lifter or actuator type and valve lash dimension.
  4. Camshaft timing.
    a. Valve opening—intake exhaust (degrees from TDC or BDC).
    b. Valve closing—intake exhaust (degrees from TDC or BDC).
    c. Valve overlap (degrees).
  5. Ports—two stroke engines (intake and/or exhaust).
    a. Flow area.
    b. Opening timing (degrees from TDC or BDC).
    c. Closing timing (degrees from TDC or BDC).

II. Intake Air System.
  1. Roots blower/supercharger/turbocharger calibration.
  2. Charge air cooling.
    a. Type (air-to-air; air-to-liquid).
    b. Type of liquid cooling (engine coolant, dedicated cooling system).
    c. Performance (charge air delivery temperature (°F) at rated power and one other power level under ambient conditions of 80 °F and 110 °F, and 3 minutes and 15 minutes after selecting rated power, and 3 minutes and 5 minutes after selecting other power level).
  3. Temperature control system calibration.
  4. Maximum allowable inlet air restriction.

III. Fuel System.
  1. General.
    a. Engine idle speed.
  2. Carburetion.
    a. Air-fuel flow calibration.
    b. Idle mixture.
    c. Transient enrichment system calibration.
    d. Starting enrichment system calibration.
    e. Altitude compensation system calibration.
    f. Hot idle compensation system calibration.
  3. Fuel injection—non-compression ignition engines.
    a. Control parameters and calibrations.
    b. Idle mixture.
    c. Fuel shutoff system calibration.
    d. Starting enrichment system calibration.
    e. Transient enrichment system calibration.
    f. Air-fuel flow calibration.
    g. Altitude compensation system calibration.
    h. Operating pressure(s).
    i. Injector timing calibration.
  4. Fuel injection—compression ignition engines.
    a. Control parameters and calibrations.
    b. Transient enrichment system calibration.
    c. Air-fuel flow calibration.
    d. Altitude compensation system calibration.
    e. Operating pressure(s).
    f. Injector timing calibration.

IV. Ignition System—non-compression ignition engines.
  1. Control parameters and calibration.
  2. Initial timing setting.
  3. Dwell setting.
  4. Altitude compensation system calibration.
  5. Spark plug voltage.

V. Engine Cooling System.
  1. Thermostat calibration.

VI. Exhaust System.

1. Maximum allowable back pressure.
VII. Exhaust Emission Control System.
1. Air injection system.
a. Control parameters and calibrations.
b. Pump flow rate.
2. EGR system.
a. Control parameters and calibrations.
b. EGR valve flow calibration.
3. Catalytic converter system.
a. Active surface area.
b. Volume of catalyst.
c. Conversion efficiency.
4. Backpressure.
VIII. Crankcase Emission Control System.
1. Control parameters and calibrations.
2. Valve calibrations.
IX. Auxiliary Emission Control Devices (AECD).
1. Control parameters and calibrations.
2. Component calibration(s).
X. Evaporative Emission Control System.
1. Control parameters and calibrations.
2. Fuel tank.
a. Volume.
b. Pressure and vacuum relief settings.

APPENDIX II TO PART 92—INTERPRETIVE RULING FOR § 92.705—REMEDIAL PLANS

The following is an interpretive ruling set forth previously by EPA for on-highway vehicles. EPA expects to apply the same principles to locomotives.

(1) The purpose of this ruling is to set forth EPA's interpretation regarding one aspect of a motor vehicle or motor vehicle engine manufacturer's recall liability under section 207(c)(1) of the Clean Air Act, 42 U.S.C. 7641(c)(1). This ruling will provide guidance to vehicle and engine manufacturers to better enable them to submit acceptable remedial plans.

(2) Section 207(c)(1) requires the Administrator to base a recall order on a determination that a substantial number of in-use vehicles or engines within a given class or category of vehicles or engines, although properly maintained and used, fail to conform to the regulations prescribed under section 202 when in actual use throughout their useful lives. After making such a determination, he shall require the manufacturer to submit a plan to remedy the nonconformity of any such vehicles or engines. The plan shall provide that the manufacturer will remedy, at the manufacturer's expense, all properly maintained and used vehicles which experienced the nonconformity during their useful lives regardless of their age or mileage at the time of repair.

APPENDIX III TO PART 92—SMOKE STANDARDS FOR NON-NORMALIZED MEASUREMENTS

TABLE III-1—EQUIVALENT SMOKE STANDARDS FOR NON-NORMALIZED MEASUREMENTS

Path length		Standards				
If the path length is:		Then the opacity may not exceed:				
cm	inches	Peak		Steady-State		
		3-sec	30-sec	Tier 0	Tier 1	Tier 2
10.0–19.9	3.94–7.86	7	5	4	3	2
20.0–29.9	7.87–11.80	13	10	7	6	4
30.0–39.9	11.81–15.74	19	14	10	8	6
40.0–49.9	15.75–19.68	24	18	13	11	9
50.0–59.9	19.69–23.61	29	23	16	13	11
60.0–69.9	23.62–27.55	34	26	19	16	13
70.0–79.9	27.56–31.49	38	30	22	18	14
80.0–89.9	31.50–35.42	43	34	25	21	16
90.0–99.9	35.43–39.36	46	37	27	23	18
100.0–109.9	39.37–43.30	50	40	30	25	20
110.0–119.9	43.31–47.23	53	43	32	27	22
120.0–129.9	47.24–51.17	56	46	35	29	23
130.0–139.9	51.18–55.11	59	49	37	31	25
140.0–149.9	55.12–59.05	62	51	39	33	27
150.0–159.9	59.06–62.98	65	54	41	35	28
160.0–169.9	62.99–66.92	67	56	43	37	30
170.0–179.9	66.93–70.86	69	58	45	39	32
180.0–189.9	70.87–74.79	71	60	47	40	33
190.0–199.9	74.80–78.73	73	62	49	42	35
≥200	≥78.74	75	64	51	44	36

APPENDIX IV TO PART 92—GUIDELINES FOR DETERMINING EQUIVALENCY BETWEEN EMISSION MEASUREMENT SYSTEMS

This appendix describes a series of correlation criteria that EPA considers to be reasonable for the purpose of demonstrating equivalency between two test systems designed to measure the same emissions during FTP locomotive testing. These criteria are presented here only as guidelines. When requested to make a finding of equivalency, EPA could base its decision on criteria other than those listed here, where EPA has reason to believe that these criteria are not appropriate.

(a) *General approach.* (1) Multiple tests should be conducted in pairs on the same locomotive or engine using each of the measurement systems.

(2) Variations for other parameters, such as test fuel, should be minimized to the maximum extent possible.

(3) Locomotive and/or locomotive engine tests conducted in accordance with the provisions of Subpart B of this part are preferred. Where appropriate, engine tests conducted in accordance with 40 CFR part 89 may also be used.

(4) Equivalency of the systems should be determined by comparing individual modal data, individual cycle-weighted data, and the average cycle-weighted results from each system.

(b) *Correlation criteria for particulate measurements.* (1) The correlation coefficient (R^2) for individual modal data should be 0.90, or higher.

(2) The maximum deviation between any pair of cycle-weighted data should be 15 percent, or less.

(3) The ratio of average cycle-weighted results using the alternate system to the average cycle-weighted results using the specified Part 92 system (i.e., avg_{alt}/avg_{spc}) should be between 0.97 and 1.05.

(c) *Correlation criteria for other measurements.* Correlation parameters for gaseous pollutants should be better than those specified in paragraph (b) of this appendix for particulate measurements.

(d) *Minimum number of tests.* The recommended minimum number of tests with each system necessary to determine equivalency is:

(1) Four locomotive or locomotive engine tests, conducted in accordance with the provisions of subpart B of this part; or

(2) Seven 8-mode nonroad engine tests, conducted in accordance with the provisions of 40 CFR part 89.

(e) *Statistical outliers.* Statistical outliers may be excluded consistent with good engineering judgement. Outliers should be replaced by rerunning each excluded test point. Where more than one outlier is excluded, is recommended to perform one additional pair of tests (in addition to the minimum number specified in paragraph (d) of this appendix) for each two outliers excluded.

[63 FR 18998, Apr. 16, 1998, as amended at 70 FR 40457, July 13, 2005]

PART 93—DETERMINING CONFORMITY OF FEDERAL ACTIONS TO STATE OR FEDERAL IMPLEMENTATION PLANS

Subpart A—Conformity to State or Federal Implementation Plans of Transportation Plans, Programs, and Projects Developed, Funded or Approved Under Title 23 U.S.C. or the Federal Transit Laws

Sec.

93.100 Purpose.
93.101 Definitions.
93.102 Applicability.
93.103 Priority.
93.104 Frequency of conformity determinations.
93.105 Consultation.
93.106 Content of transportation plans and timeframe of conformity determinations.
93.107 Relationship of transportation plan and TIP conformity with the NEPA process.
93.108 Fiscal constraints for transportation plans and TIPs.
93.109 Criteria and procedures for determining conformity of transportation plans, programs, and projects: General.
93.110 Criteria and procedures: Latest planning assumptions.
93.111 Criteria and procedures: Latest emissions model.
93.112 Criteria and procedures: Consultation.
93.113 Criteria and procedures: Timely implementation of TCMs.
93.114 Criteria and procedures: Currently conforming transportation plan and TIP.
93.115 Criteria and procedures: Projects from a transportation plan and TIP.
93.116 Criteria and procedures: Localized CO, PM_{10}, and $PM_{2.5}$ violations (hotspots).
93.117 Criteria and procedures: Compliance with PM_{10} and $PM_{2.5}$ control measures.
93.118 Criteria and procedures: Motor vehicle emissions budget.
93.119 Criteria and procedures: Interim emissions in areas without motor vehicle emissions budgets.
93.120 Consequences of control strategy implementation plan failures.
93.121 Requirements for adoption or approval of projects by other recipients of funds designated under title 23 U.S.C. or the Federal Transit Laws.