AUTHENTICATED
U.S. GOVERNMENT
INFORMATION
GPO

FIGURE 6 TO PART 223—TED EXTENSION IN SUMMER FLOUNDER TRAWL

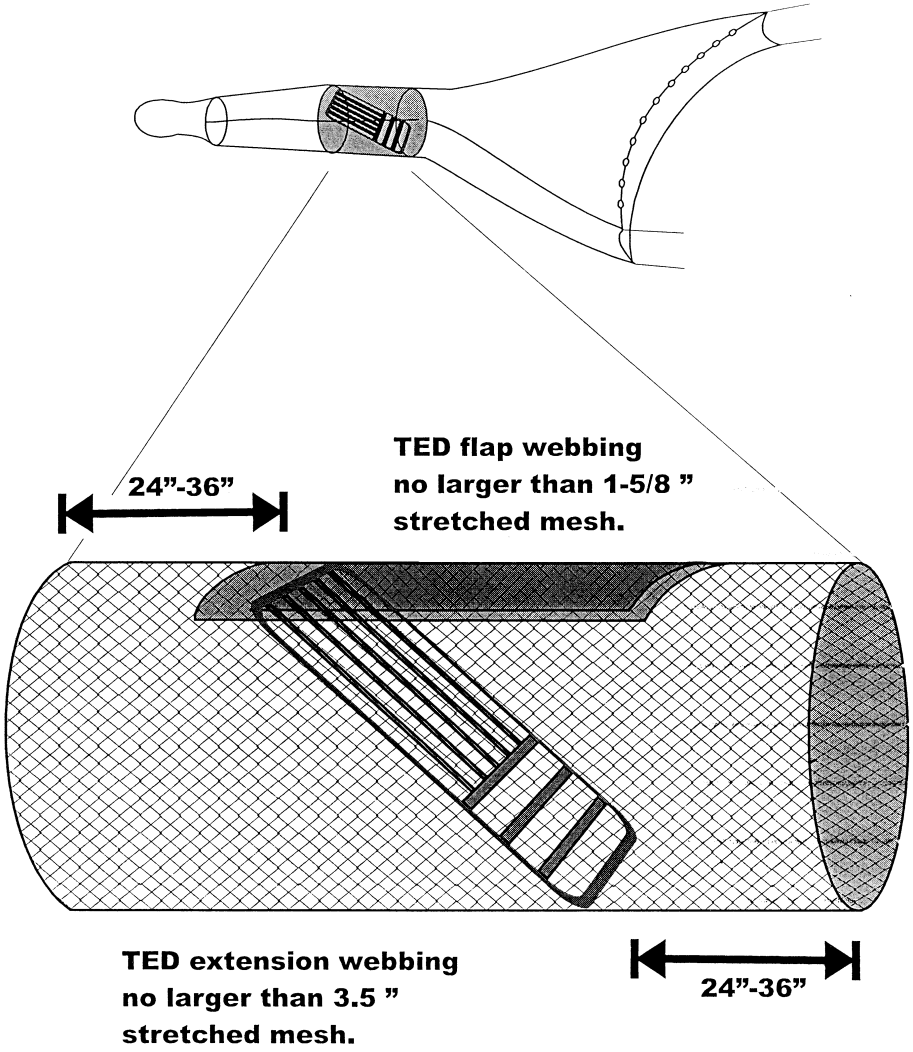

[64 FR 55864, Oct. 15, 1999]

FIGURES 7–9b TO PART 223 [RESERVED]