AUTHENTICATED
U.S. GOVERNMENT
INFORMATION
GPO

not exceed 100 ft (30.5 m) in length and the cable weight shall not exceed 1 pound/foot (lb/ft) [1.5 kilogram/meter (kg/m)] except when equivalent combinations of greater span lengths with cable weight less than 1 lb/ft (1.5 kg/m) are permissible. Copies of RUS Bulletin 1751F–630 are available upon request from RUS/USDA, 1400 Independence Avenue, SW., STOP 1522, Washington, DC 20250–1522, FAX (202) 720–4120.

(ii) When an attachment must be made to the face of a building wall away from a corner, a "U" type wall bracket shall be used as indicated in sketch C of Figure 7. Only slack span construction with 5/16 in. (8 mm) utility grade strand shall be permitted in this situation. The bail of the automatic clamp shall be protected by a wire rope thimble.

(6) Aerial cable shall be located on the rear or side of the building and shall be run only in a horizontal or a vertical direction. The cable route shall be selected so as to avoid building projections and obstructions to the extent practicable.

(7) Cable attachment devices shall be located on solid masonry or on studs of wood frame buildings. Cable attachment devices may be installed on sheet surface materials only when such materials are reinforced with a backing material which allows penetration and firm holding of the attachment devices through the backing material.

(8) The minimum separation on or in buildings between cable and other facilities shall be as indicated in § 1755.505(f)(8), Table 1.

(9) On horizontal runs, cable clamps shall be placed so that the attachment is below the cable. On vertical runs, cable clamps shall be placed so that the attachment is on the same side as horizontal runs. Cable clamps shall be placed on the inside of cable bends.

(10) On horizontal runs, cable clamps shall be placed not more than 16 in. (400 mm) apart for cable diameters equal to or greater than 1 in. (25.4 mm) and 24 in. (600 mm) apart for cable diameters less than 1 in. (25.4 mm).

(11) On vertical runs, cable clamps shall be approximately 24 in. (600 mm) apart for all sizes of cable.

(12) For the cable entrance, holes shall be bored slightly larger in diameter than the cable and shall slope upward from outside to inside. A duct sealer having RUS acceptance or RUS technical acceptance shall be applied to both ends of the hole after the cable is pulled in.

(13) Section 1755.505(g) and (h) shall also apply to aerial cable services.

[66 FR 43317, Aug. 17, 2001]

§ 1755.508 Customer access location protection.

(a) All customer access locations shall be protected.

(b) Customer access location protection shall consist of installing the telecommunications facilities with proper clearances and insulation from other facilities, providing primary voltage limiting protection, fuse links, NIDs, BETs, or fused primary station protectors, if required, and adequate bonding and grounding.

(c) All NIDs shall be RUS accepted or RUS technically accepted or the RUS borrower shall obtain RUS regional office approval on a case by case basis as applicable.

(d) All BETs shall be RUS accepted or RUS technically accepted.

(e) All fused primary station protectors shall be RUS accepted or RUS technically accepted.

(f) NIDs, BETs, or fused primary station protectors shall be mounted outside for all applications except for those described in paragraphs (g)(1) through (g)(3) of this section.

(g) NIDs, BETs, or fused primary station protectors may be mounted inside when:

(1) Large buildings are to be served and the customer requests an inside installation;

(2) Buried alarm circuits are requested by the subscriber; or

(3) The customer requests an all buried installation for appearance or to prevent the drilling of holes in aluminum or vinyl siding.

(h) Outside mounted NIDs, BETs, or fused primary station protectors shall be easily accessible and shall be located between 3 to 5 ft (1 to 1.5 m) above final grade.

(i) The locations of NIDs, BETs, or fused primary station protectors shall be selected with emphasis on utilizing the shortest primary station protector

grounding conductor practicable and on grounding of the telecommunications primary station protector to the electric service grounding system established at the building served utilizing electrodes (c) through (g) cited in section 800–40(b)(1) of ANSI/NFPA 70–1999, *NEC®*. The *National Electrical Code®* and *NEC®* are registered trademarks of the National Fire Protection Association, Inc., Quincy, MA 02269. The ANSI/NFPA 70–1999, *NEC®*, is incorporated by reference in accordance with 5 U.S.C. 552(a) and 1 CFR part 51. Copies are available from NFPA, 1 Batterymarch Park, P. O. Box 9101, Quincy, Massachusetts 02269–9101, telephone number 1 (800) 344–3555. Copies of ANSI/NFPA 70–1999, *NEC®*, are available for inspection during normal business hours at RUS, room 2905, U.S. Department of Agriculture, 1400 Independence Avenue, SW., STOP 1598, Washington, DC 20250–1598, or at the National Archives and Records Administration (NARA). For information on the availability of this material at NARA, call 202–741–6030, or go to: *http://www.archives.gov/federal_register/code_of_federal_regulations/ibr_locations.html*.

(j) If access to the building electric service grounding system, as referenced in paragraph (i) of this section, is not possible or is not reasonable (telecommunications primary station protector grounding conductor will be longer than 10 ft (3 m)), the NID, BET, or fused primary station protector shall be located as close as practicable to electrodes (a) or (b) cited in section 800–40(b)(1) of ANSI/NFPA 70–1999, *NEC®*.

(k) In addition, the NID, BET, or fused primary station protector shall be located in, on, or immediately adjacent to the structure or building to be served as close as practicable to the point at which the telecommunications service wire attaches to the building, making sure that the telecommunications primary station protector grounding conductor is connected to the closest, existing, and accessible electrode, of the electrodes cited in paragraph (i) or (j) of this section.

(l) For the preferred customer access location installation, the ANSI/NFPA 70–1999, *NEC®*, permits the telecommunications grounding conductor to be connected to the metallic conduit, service equipment closure, or electric grounding conductor as shown in Figure 8 of paragraph (l)(2) of this section.

(1) Connections to metallic conduits shall be made by ground straps clamped over a portion of the conduit that has been cleaned by sanding down to bare metal.

(2) Connections to metallic service equipment closures shall be made by attaching a connector which is listed for the purpose by some organization acceptable to the local authority (State, county, etc.) per article 100 of ANSI/NFPA 70–1999, *NEC®*, definition for "Listed" (for example connectors listed for the purpose by Underwriters Laboratories (UL)). Figure 8 is as follows:

FIGURE 8

GROUNDING OF TELECOMMUNICATIONS SERVICE TO ELECTRIC SERVICE (PREFERRED METHOD)

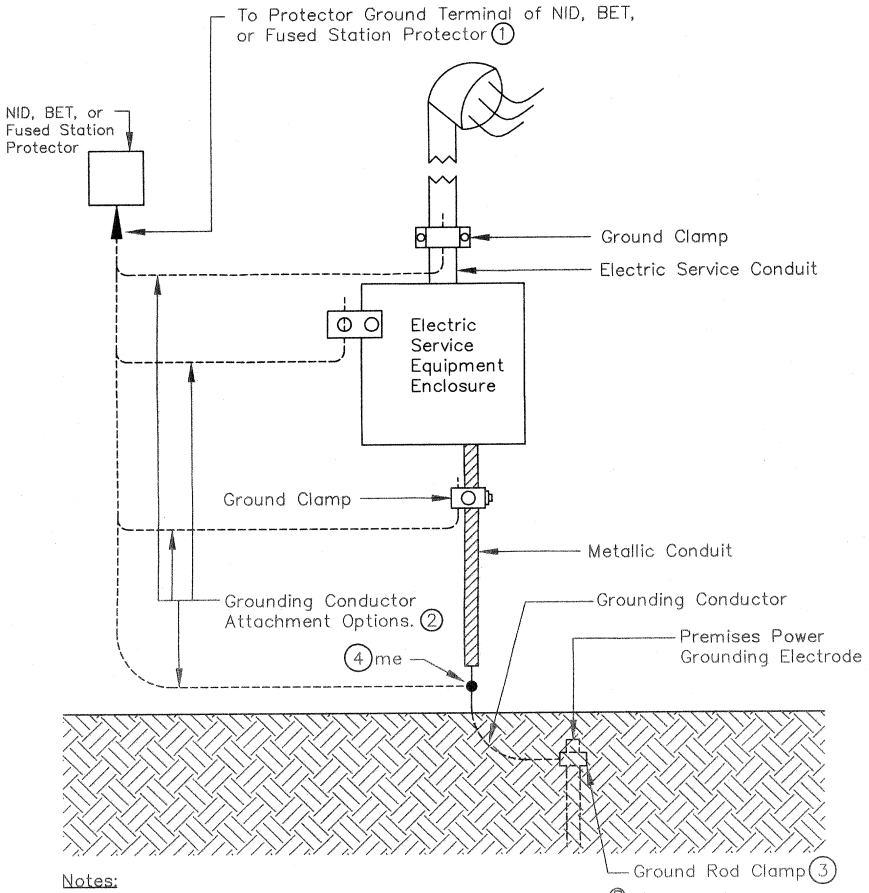

Notes:

1. See Section 800–40(a) of ANSI/NFPA 70–1999 NEC® 2. Select one of the attachment options shown above for the installation. 3. Clamp must be accepted by Listing Agency (UL, etc.). 4. Connector (Item "me") must be accepted by a Nationally recognized testing laboratory.

(m) Where it is not possible to accomplish the objective of paragraphs (i), (j), and (k) of this section, interior metallic pipes may be used to the maximum practicable extent to gain access to the electric service ground as shown in Figure 9. Note that the water pipe in Figure 9 is electrically continuous between electric and telecommunications bonds to the cold water pipe and it is used only as a portion of a bonding conductor and, therefore, does not have to be "acceptable" as a ground electrode but may be floating (isolated from ground by a plastic pipe section). ANSI/NFPA 70–1999, *NEC*®, requires that metal piping be used as a bonding conductor in this manner only when the

connectors to the pipe are within 1.5 m (5 ft) of where the pipe enters the premises. This is not the preferred installation. The RUS preferred installation has the telecommunications primary station protector grounded directly to an accessible location near the power grounding system. See paragraph (l) of this section. Figure 9 is as follows:

FIGURE 9

ALTERNATIVE TECHNIQUE FOR BONDING TO ELECTRIC SERVICE GROUND WHERE DIRECT ATTACHMENT IS NOT POSSIBLE

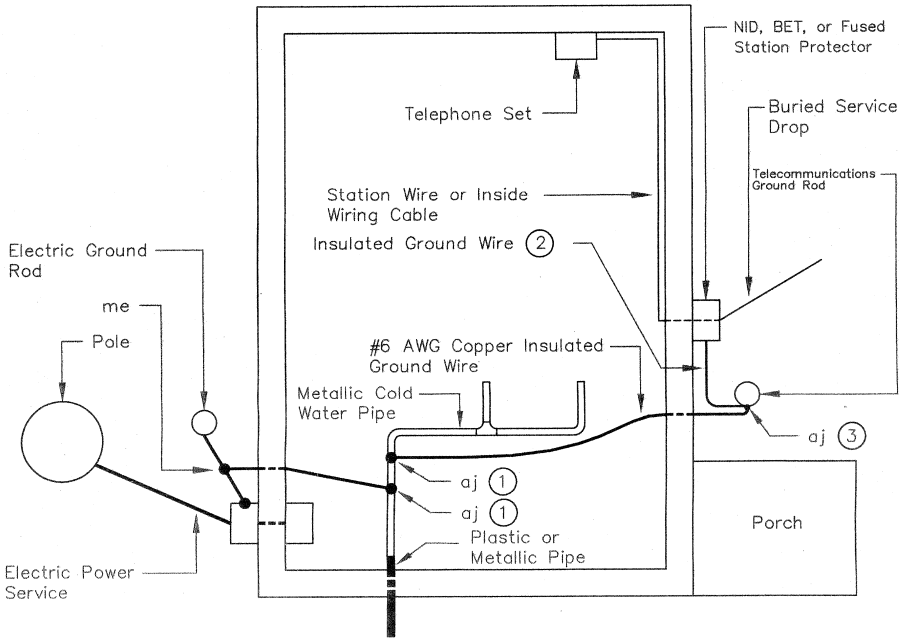

Notes:

(1.) Both electric and telephone "aj" connectors attached to the cold water pipe shall be within 5 ft (1.5 m) of where the pipe enters the premises.

(2.) Refer to Section 1755.508, Paragraph (v), Table 5 for the ground wire conductor size. Ground wire must be accepted by a Nationally recognized testing laboratory.

(3.) Connector "aj" must be accepted by a Nationally recognized testing laboratory.

(n) Where the telecommunications premises system at a customer's access location is grounded to a separate electrode (of any type) this telecommunications grounding electrode must be bonded to the electric grounding system with a No. 6 AWG or larger copper insulated grounding conductor. Bonding of separate electrodes is a requirement of the ANSI/NFPA 70–1999, *NEC*®.

(o) The NID, BET, or fused primary station protector pair size shall be selected for the number of lines anticipated within five years.

(p) When lightning damage is considered probable or customer access locations are remote from the borrower's headquarters, use of maximum duty gas tube primary station protectors incorporated in NIDs, BETs, or fused primary station protectors should be considered. (See RUS TE&CM 823, Electrical Protection by Use of Gas Tube Arresters). Copies of RUS TE&CM 823 are available upon request from RUS/USDA, 1400 Independence Avenue, SW., STOP 1522, Washington, DC 20250–1522, FAX (202) 720–4120.

(q) NIDs or BETs incorporating fuseless station protectors shall always be used in preference to fused station protectors or BETs incorporating fused protectors, when in the judgment of the RUS borrower or the engineer delegated by the RUS borrower, the requirements of ANSI/NFPA 70–1999, *NEC*®, for fuseless station protectors can be met.

(r) A fuse link consisting of a copper conductor two gauges (AWG) finer (numerically higher) conductivity than the aerial service wire shall be provided between the cable and aerial service wire where NIDs or BETs incorporating fuseless station protectors are used. Thus for a 22 AWG drop, a fuse link of No. 24 AWG or finer copper wire shall be provided. If the cable circuit is No. 24 gauge or finer, the cable conductors serve as the fuse link for the 22 AWG aerial service wire and no separate fuse link is necessary. (Note: The fuse link or the facilities serving as the fuse link must be located between the telecommunications facilities that are exposed to possible power cross and the customer drop where there is no exposure to possible power cross.)

(s) RUS's buried plant practices require buried main line plant to be protected against power contacts to aerial plant extensions and aerial inserts by No. 24 AWG fuse links at every buried-aerial junction.

(t) In aerial cable plant, fuse links are usually provided by No. 24 AWG leads on filled terminal blocks regardless of the gauge of the cable conductors. This practice is acceptable if the ampacity of the aerial service wire is sufficiently higher than the fuse link's ampacity.

(u) The grounding and bonding of each NID, BET, or fused primary station protector shall be selected by consulting paragraphs (i) through (n) of this section. The "first choice" assembly unit shall be selected whenever the prevailing conditions make its use practicable. The NID, BET, or fused primary station protector assembly unit selected shall be installed in accordance with the appropriate construction drawing specified in RUS Bulletin 1753F–153 (RUS Form 515d), Specifications and Drawings for Service Installations at Customer Access Locations (Incorporated by reference at §1755.97). Copies of RUS Bulletin 1753F–153 are available upon request from RUS/USDA, 1400 Independence Avenue, SW., STOP 1522, Washington, DC 20250–1522, FAX (202) 720–4120.

(v) The minimum size grounding conductor that can be used with a single NID; a group of NIDs; a multipair NID; fused protector; or BET shall be in accordance Table 5, as follows:

TABLE 5—GROUNDING CONDUCTOR SIZE VERSUS NUMBER OF CIRCUITS

Minimum grounding conductor size	Number of circuits	
	Fuseless (carbon or gas tube)	Fused
#12 AWG, copper, insulated	1 to 2	1 to 3.
#10 AWG, copper, insulated	3 to 5	4 to 7.
#6 AWG, copper, insulated	6 or more	8 or more.

(w) Grounding conductor runs between the NID, BET, or fused station protector and the ground electrode shall conform to the following:

(1) The shortest, most direct route practicable shall be used;

(2) Sharp bends in the grounding conductor shall be avoided during installation;

(3) No splices shall be made in the grounding conductor;

(4) Grounding conductors shall not be fished through walls, under floors, or placed in bridle rings or any metal conduit unless the grounding conductor is bonded to the conductor at both ends of the metallic conduit;

(5) Grounding conductor runs from an outside mounted NID, BET, or fused station protector to an inside ground electrode shall use the same entrance as the station wire; and

(6) Grounding conductor runs from an outside mounted NID, BET, or fused station protector to an outside ground electrode at the building shall be attached to the exterior surface of the building or buried. If buried, the grounding conductor shall be either plowed or trenched to a minimum depth of 12 in. (300 mm). When trenched, the trenches shall be as close to the side of the building as practicable, backfilled, and tamped to restore the earth to its original condition.

(x) Telecommunications grounding connectors shall be RUS accepted or RUS technically accepted. Grounding and bonding conductors shall be made of copper. Where the grounding and bonding conductors must be connected to aluminum electric service grounding conductors, bimetal grounding connectors shall be used.

(y) Grounding conductor attachments shall conform to the following:

(1) Galvanized nails or clamps, or nickel-copper alloy staples shall be used for grounding conductor attachments in accordance with Table 6 in paragraph (y)(3) of this section;

(2) Grounding conductors, station or buried service wires in parallel runs may share the same fastening device when the device is specifically designed for two wires. See Table 6 in paragraph (y)(3) of this section for station wire and grounding conductor fasteners; and

(3) Grounding conductor fasteners shall be placed 12 to 18 in. (300 to 450 mm) apart on straight runs and 2 to 4 in. (50.8 to 100 mm) apart at corners and at bends. Table 6 is as follows:

Table 6

TYPICAL FASTENING DEVICES FOR STATION WIRES AND GROUNDING CONDUCTORS (9)

TYPE AND GAUGE OF WIRE		APPROX. OVERALL DIAMETER	TYPES OF FASTENING DEVICES FOR VARIOUS TYPES OF BUILDINGS OR WALL FINISHES						
			Hard Woods	Soft Woods	Wallboard, Plaster on Wood, or Metal Lath, or Concrete Block(3)	Brick, Stone or Concrete(3)	Shingles and Siding(4)	Sheet Metal(5)	Wall Tile(3)
#22 AWG Station Wire		.125 in. to .155 in.	A1, D7, E1, F1, G1	A2, A3, D8, E2, F2, G2	D8, D9, E2, E3, G2, G3	D8, E2, G2	A2, A3, D7, D8, E2, F2	D7, D8, D9, G1, G2, G3, H1	D8, D9, E2, E3, G2, G3, H1
GROUNDING CONDUCTOR	#10 AWG Insulated Wire	.168 in.	A1, B1, D1	A2, A3, B1, B2, D2	B2, D2, D3	B2, D2	A2, A3, B1, B2, D1, D2	D1, D2, D3, H2	B2, D2, D3, H2
GROUNDING CONDUCTOR	#12 AWG Insulated Wire	.127 in.	A1, B1, C1, E1, F1, D7, G1	A2, B1, B2, C1, C2, D8, E2, F2, G2	B2, C2, C3, D8, D9, E2, E3, G2, G3	B1, B2, C2, D8, E2, E3, G2	A2, A3, B1, B2, C1, C2, D8, E2, F2, G2	C1, C2, C3, D7, D8, D9, E1, E2, E3, G1, G2, G3, H1	B2, B3, C3, D8, D9, E2, E3, G2, G3, H1
GROUNDING CONDUCTOR	#6 AWG Insulated Wire	.290 in.	A2, A3, B1, D4	A3, B2, D5	B2, D5, D6	B2, D5	A3, B2, D5	D4, D5, D6, H3	B2, D5, D6, H3

EXPLANATION OF FASTENER CODES

A. Staple Machine, Round Crown, Interior Use Only – (Note 6)
1. 3/16" or 1/4" Crown – 3/8" Leg
2. 3/16" or 1/4" Crown – 7/16" or 9/16" Leg
3. 3/16" or 1/4" Crown – 9/16" Leg

B. Nail, Ground Wire, Single Shank Galvanized, Interior and Exterior Use
1. 7/8" #14
2. 1–3/8" #13

C. Clamp, Ground Wire, One Hole, Galvanized, Interior and Exterior Use
1. Type B–1/2" x #6 RH Screw (1)
2. Type B–3/4" x #6 RH Screw (1)
3. Type B–1/8" x 3" Toggle Bolt (2)

D. Clamp, One Hole Offset, Galvanized or Enameled, Interior and Exterior Use – (Note 7)

Wire Size Min.	Wire Size Max.	Fasteners (1), (2)
1. 5/32"	to 7/32"	1/2" x #6 RH Screw
2. 5/32"	to 7/32"	3/4" x #6 RH Screw
3. 5/32"	to 7/32"	1/8" x 3" Toggle Bolt
4. 1/4"	to 5/16"	1/2" x #6 RH Screw
5. 1/4"	to 5/16"	1" x #6 RH Screw
6. 1/4"	to 5/16"	1/8" x 3" Toggle Bolt
7. 1/8"	to 5/32"	1/2" x #6 RH Screw
8. 1/8"	to 5/32"	3/4" x #6 RH Screw
9. 1/8"	to 5/32"	1/8" x 3" Toggle Bolt

E. Clamp, Station Wiring, One Hole, Galvanized or Enameled, Interior and Exterior Use – (Note 7)
1. Type B–1/2" x #6 RH Screw (1)
2. Type B–3/4" x #6 RH Screw (1)
3. Type B–1/8" x 3" Toggle Bolt (2)

F. Nail, Station Wiring, Galvanized or Enameled, Interior and Exterior Use – (Note 7)
1. Type B – 1/2"
2. Type B – 7/8"

G. Clamp, One Hole Double – (Note 8)

Wire Size Min.	Wire Size Max.	Fasteners
1. Two 1/8"	to 5/32"	3/4" x #6 RH Screw(1)
2. Two 1/8"	to 5/32"	1" x #6 RH Screw(1)
3. Two 1/8"	to 5/32"	1/8" x 3" Toggle Bolt(2)

H. Station Wire Clip, Adhesive Backed, Interior Use Only –

Wire Size
1. 1/8" Nominal
2. 3/16" Nominal
3. 1/4" Nominal

NOTES: 1. Screw dimensions are minimum. Where appropriate, either or both dimensions shall be increased. All wood screws for exterior use shall be stainless steel. All other exterior metal devices shall be stainless steel, zinc coated steel, silicon bronze, or corrosion resistant aluminum alloy.

2. Toggle bolt dimensions are minimum. Where appropriate, either or both dimensions shall be increased.

3. Wall screw anchors may be used in wall board, plaster or tile walls. Screws and nails in masonry shall be secured by means of expansions type anchors. Equivalent manual or machine-driven devices may be used. Where toggle bolts are specified, equivalent devices may be used.

4. Lead holes shall be drilled for screws, nails, and bridle rings in shingles and dropsiding.

5. Sheet metal screws shall be used except where toggle bolts are required. Where wood sheathing under sheet metal siding is encountered, the sheet metal may be drilled or punched and a wood screw used.

6. Machine-driven staples of nickel-copper composition may be used for exterior wiring.

7. Galvanized clamps and wiring nails may be used for exterior and interior wiring. Enameled clamps shall be used for interior wiring only. Where toggle bolts or equivalent devices require holes in the structure larger than the clamp being fastened, a suitable washer of sufficient size to cover the hole must be used under the clamp.

8. Double clamp may be used where two #22 AWG station wires, two #12 AWG grounding conductors, or one #22 AWG station wire and one #12 grounding conductor parallels one another.

9. For converting English units to Metric units use 1 in. = 25.4 mm.

(z) Grounding conductors shall be separated from non-telecommunications company wires in accordance with section 800–12(b) of ANSI/NFPA 70–1999, *NEC*®.

(aa) Grounding conductors run through metal conduits shall be bonded to the conduit at each end. RUS accepted and RUS technically accepted pipe type ground clamps and grounding connectors shall be used for bonding.

(bb) Where NID, BET, or fused station protector assembly units require grounding conductor connections to pipe systems, the following apply:

(1) The connection shall be made to a cold water pipe of an operating water system;

(2) The connection point shall be preferably inside the building;

(3) Allow a minimum of 6 in. (152 mm) between the last fastener and the point where the grounding conductor first touches the water pipe;

(4) Leave 2 in. (50.8 mm) of slack in the grounding conductor to avoid breaking the conductor at the terminating point. Tape the grounding conductor to the pipe where possible to avoid movement. In no case, shall the grounding conductor be coiled or wrapped around the pipe;

(5) The pipe shall be cleaned with fine sand paper to make a good electrical connection. Care should be taken to avoid damaging the pipe while cleaning it;

(6) Attach the pipe grounding conductor connector to the cleaned area of pipe and tighten. Care shall be exercised to avoid deforming, crushing, or otherwise damaging the pipe. A simple continuity check with an ohmmeter between the connector and the pipe will indicate whether or not a good electrical contact has been made. Set the ohmmeter to "Rx1" scale to ensure that a low resistance contact is made;

(7) A warning tag shall be attached to the ground clamp with the following or equivalent statement: "Call the telecommunications company if this connector or grounding conductor is loose or must be removed;" and

(8) When the water pipe is used, the ANSI/NFPA 70–1999, *NEC*®, requires that metal piping be used as a bonding conductor in this manner only when the connections to the pipe are within 5 ft (1.5 m) of where the pipe enters the premises.

(cc) Bonding conductors shall consist of either copper or tinned copper insulated wires of appropriate sizes.

(1) Bonding conductors shall be run and attached in the same manner as grounding conductors.

(2) Attaching and terminating devices for bonding conductors shall be adequate for the size of wire involved. The No. 6 AWG copper insulated conductor or larger shall not be terminated by bending it around a threaded stud.

(dd) Where NID, BET, or fused station protector assembly units require a driven ground rod the following shall apply to the ground rod installation:

(1) Locate the ground rod at least 1 ft (300 mm) from buildings, poles, trees and other obstruction;

(2) Ground rods shall not be installed within 6 ft (2 m) of electric service ground rods (Note: This minimum separation is provided to avoid mutual impedance effects of multiple grounding electrodes that will deleteriously degrade the effective impedance-to-earth if grounding electrodes are installed any closer than 6 ft (2 m) to one another. This requirement is included for cases where the telecommunications company is not allowed, for some reason, to observe the RUS preferred grounding method of attaching the primary protector grounding conductor directly to an accessible point on the

building electric service grounding system. RUS believes that if the primary protector location can be sited within 6 ft (2 m) of the electric service ground rod then the electric service ground rod could be used as the preferred telecommunications grounding electrode and a separate telecommunications ground rod is unnecessary);

(3) A hole, 15 in. (350 mm) deep and 6 in. (150 mm) in diameter, shall be dug at the location where the ground rod is to be driven;

(4) Where "slip-on" type ground rod clamps are used instead of "clamp-around" type clamps, the ground rod clamps shall be placed onto the rod prior to driving the rod into the ground (Note there should be one clamp for the NID, BET, or fused station protector grounding conductor and one clamp for the conductor required to bond the telecommunications ground rod to the electric grounding system). However, the clamp shall not be tightened until the rod is completely driven. The end of the rod shall be placed in the bottom of the hole and the rod shall be aligned vertically adjacent to one wall of the hole prior to driving. The rod shall be driven until its tip is 12 in. (300 mm) below final grade. The grounding conductor shall then be attached, the clamp shall be tightened, and hole backfilled. Clamps employed in this manner shall be suitable for direct burial and shall be RUS accepted or RUS technically accepted; and

(5) Where rods are manually driven, a large number of blows from a light hammer (4 lbs (1.8 kg)) shall be used instead of heavy sledgehammer type blows. This should keep the rod from bending.

(ee) Terminations on fuseless primary station protectors incorporated in NIDs and on fused primary station protectors shall be as shown in Figures 10, 11, 12, and 13 of paragraph (ee)(1) of this section, Figure 14 of paragraph (ee)(4) of this section, and Figure 15 of paragraph (ee)(6) of this section. The inner jackets of buried service wires and outer jackets of cables used as service drops shall be extended into the NID or the fused primary station protector. A 10 in. (250 mm) length of each spare wire shall be left in NIDs or fused primary station protectors. The spare wires shall be coiled up neatly and stored in the NID or fused primary station protector housing.

(1) The shields of buried service wires may be connected to the ground binding post using RUS accepted or RUS technically accepted buried service shield bond connectors as shown in Figure 10 for NIDs and Figure 11 for fused primary station protectors. RUS accepted or RUS technically accepted buried service wire harness wires designed for customer access location installations may also be used for terminating buried service wire shields to the ground binding post of the NID as shown in Figure 12 and Figure 13 for fused primary station protectors. Figures 10 through 13 are as follows:

FIGURE 10

BONDING BURIED SERVICE WIRE AT STATION PROTECTOR OF NID USING SERVICE WIRE SHIELD BOND CONNECTOR

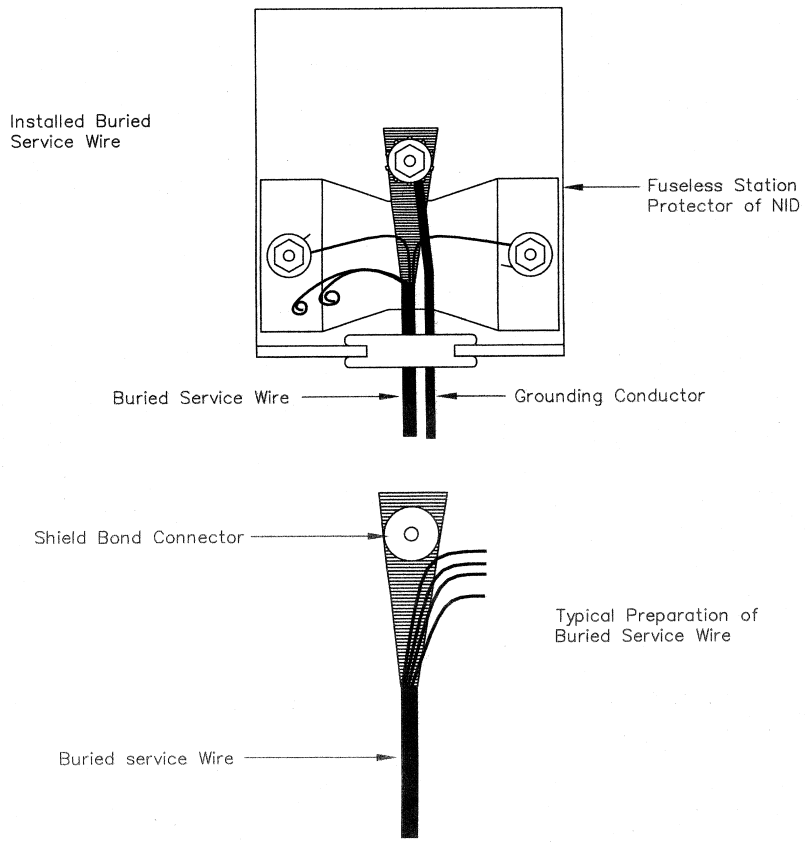

FIGURE 11

BONDING BURIED SERVICE WIRE AT FUSED STATION PROTECTOR USING SERVICE WIRE SHIELD BOND CONNECTOR

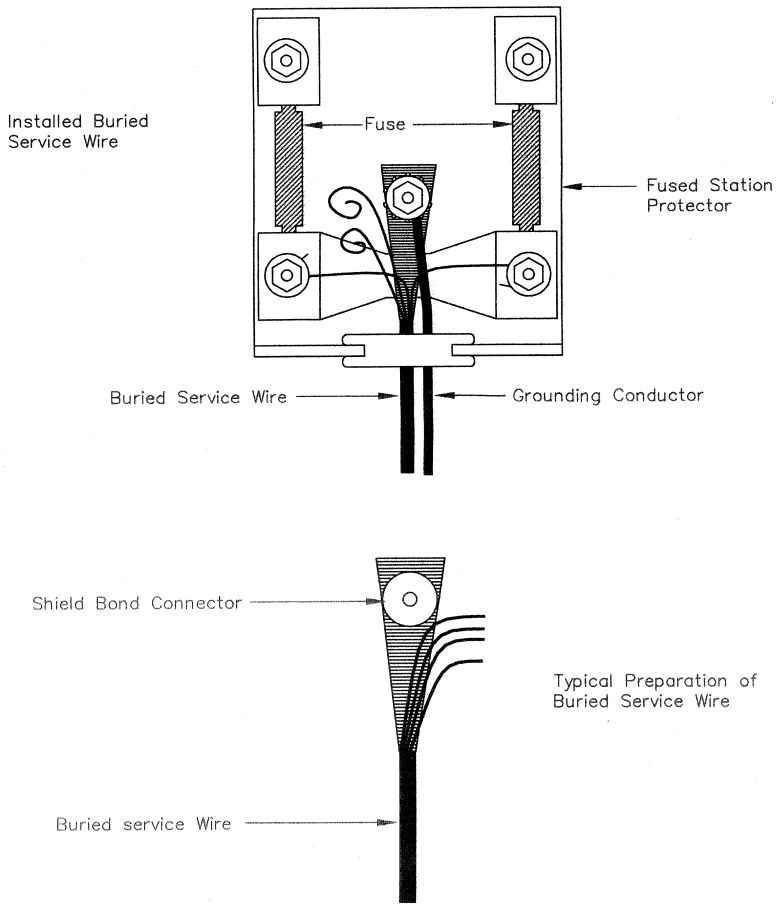

FIGURE 12

BONDING BURIED SERVICE WIRE AT STATION PROTECTOR OF NID USING SERVICE WIRE BONDING HARNESS

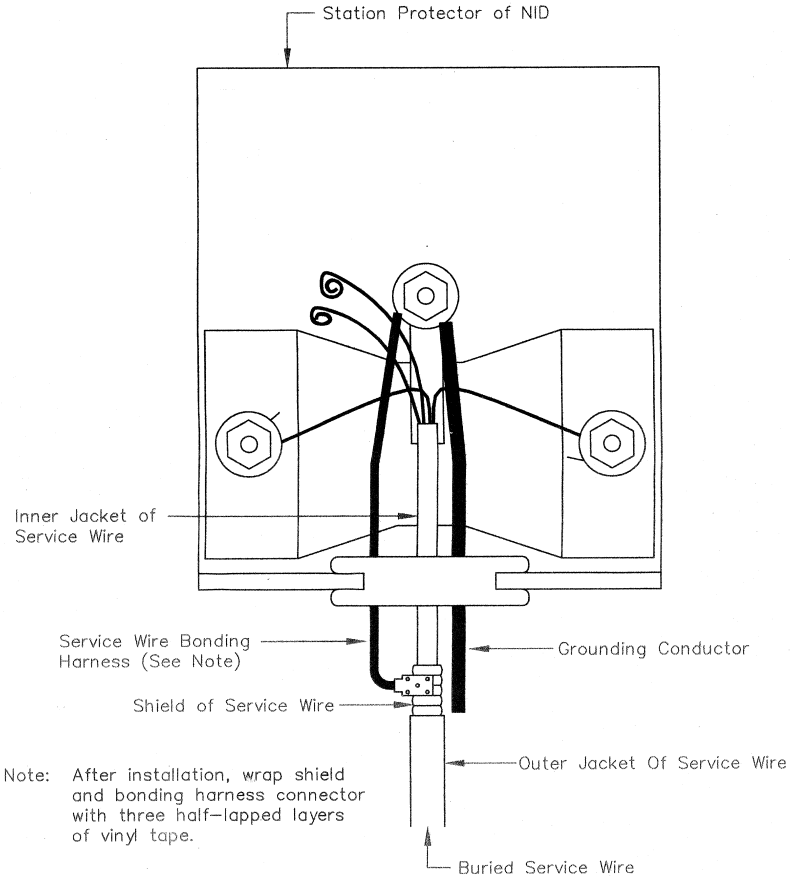

FIGURE 13

BONDING BURIED SERVICE WIRE AT FUSED STATION PROTECTOR USING SERVICE WIRE BONDING HARNESS

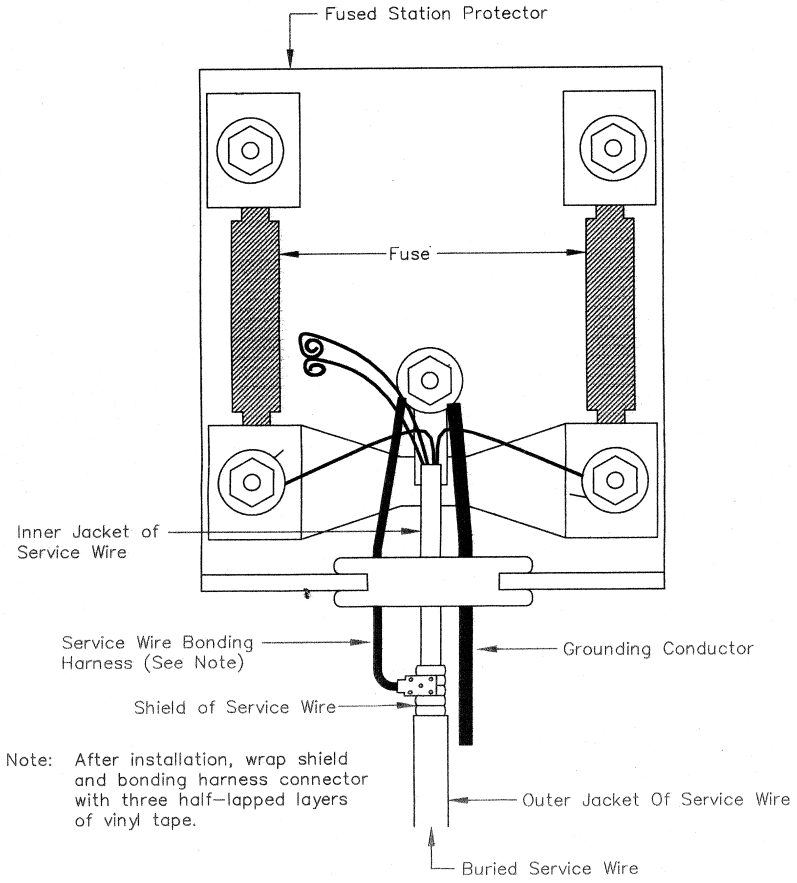

(2) On buried service drops and aerial service drops of more than 6 pairs using RUS accepted or RUS technically accepted cables, the shields shall be terminated with a RUS accepted or RUS technically accepted cable shield bonding connector and extended to the ground binding post of the NID, BET, or fused primary station protector with an RUS accepted or RUS technically accepted bonding harness wire. The installation of the shield bond connector and bonding harness wire shall be in accordance with the manufacturer's instructions.

(3) The shield and other conductors at the fuseless primary station protector incorporated in the NID shall be

terminated as shown on Figure 14 in paragraph (ee)(4) of this section. The pronged or cupped washer shall be placed above the shield. The grounding conductor shall be placed around the post on top of the pronged or cupped washer. A flat washer shall be placed above the grounding conductor.

(4) The station wire signaling ground conductor, if required, shall be placed above the first flat washer and beneath the second flat washer as indicated in Figure 14 as follows:

FIGURE 14

TERMINATION OF CONDUCTORS AND SHIELD ON STATION PROTECTOR BINDING POSTS OF NID

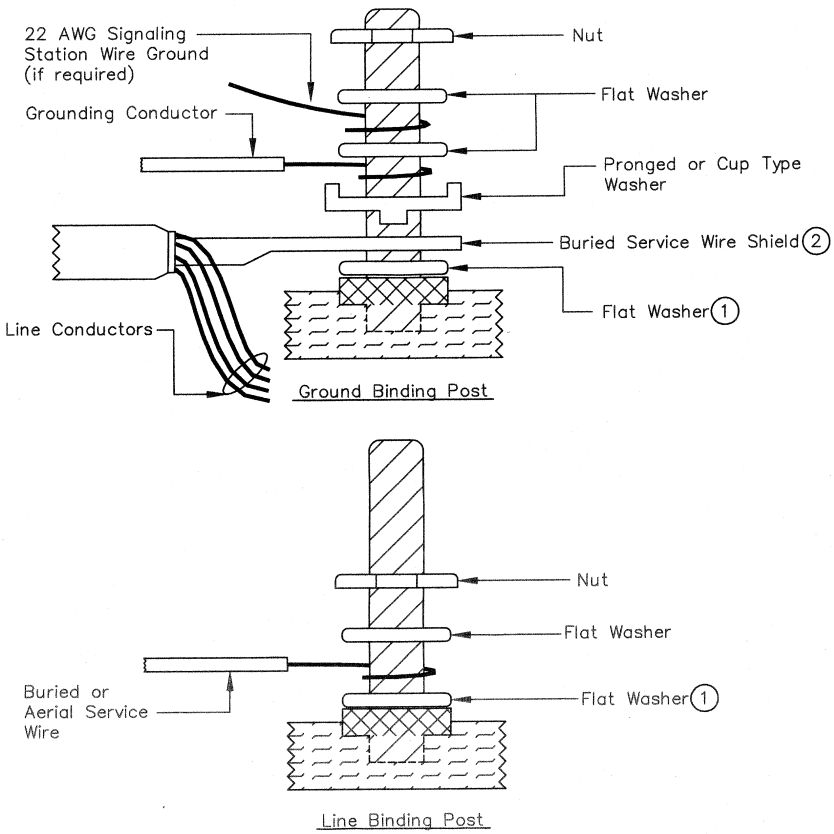

Notes:

(1.) If shoulder is inadequate to support shield or wire add a flat washer.

(2.) Terminate buried service wire shield with station protector grounding lug of NID in accordance with either Figure 10 or 12 of paragraph (ee)(1) of this section.

(5) The shield and other conductors at the fused primary station protector shall be terminated as shown on Figure 15 in paragraph (ee)(6) of this section. The pronged or cupped washer shall be placed above the shield. The grounding conductor shall be placed around the post on top of the pronged or cupped washer. A flat washer shall be placed above the grounding conductor.

(6) The station wire signaling ground conductor, if required, shall be placed above the first flat washer and beneath the second flat washer as indicated in Figure 15 as follows:

FIGURE 15

TERMINATION OF CONDUCTORS AND SHIELD ON FUSED STATION PROTECTOR BINDING POSTS

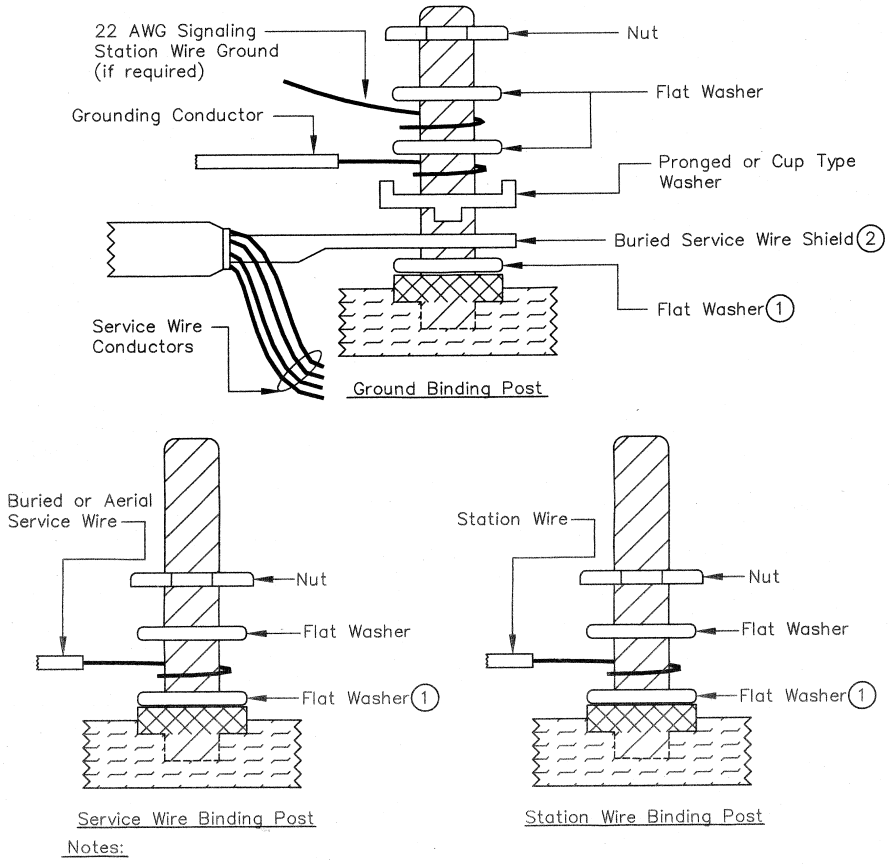

Notes:

(1) If shoulder is inadequate to support shield or wire add a flat washer.

(2) Terminate buried service wire shield on fused station protector grounding lug in accordance with either Figure 11 or 13 of paragraph (ee)(1) of this section.

(7) Indoor NIDs or BETs that are equipped with "Quick Connect" type terminals shall not have more than one wire connected per clip. No. 19 AWG copper and No. 18 AWG copper covered-steel reinforced aerial service wire conductors shall not be connected to quick connect terminals. Nonmetallic reinforced aerial service wire using No. 22 AWG copper conductors may be connected to the quick connect terminals.

(8) Tip and ring connections and other connections in multipair NIDs or BETs shall be as indicated in Figure 16 as follows:

FIGURE 16

MULTIPAIR NID OR BET TERMINAL CONNECTIONS CONTAINING FUSELESS STATION PROTECTORS

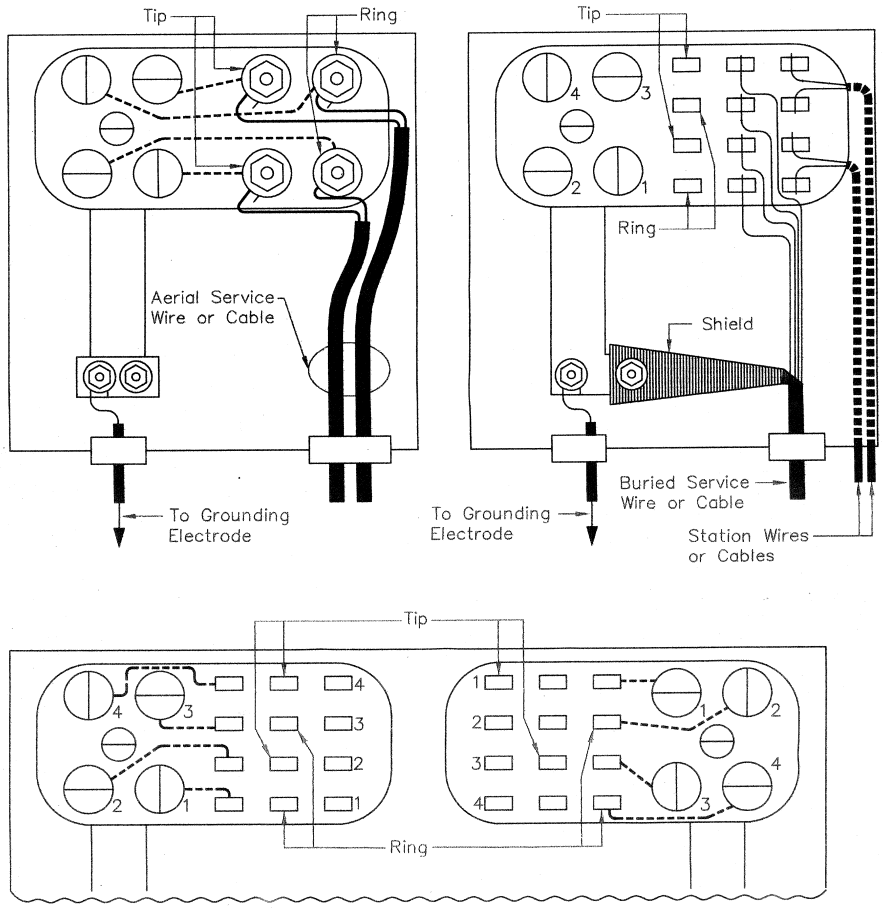

Note: #18 AWG copper–covered steel reinforced aerial service conductors shall not be connected to quick connect terminals. Nonmetallic reinforced aerial service conductors (#22 AWG copper) may be connected to quick connect terminals.

(ff) System polarity and conductor identification shall be maintained in NIDs, BETs, or fused primary station protectors in accordance with construction drawings 815 and 815–1 contained in § 1755.510.

[66 FR 43317, Aug. 17, 2001, as amended at 69 FR 18803, Apr. 9, 2004]

§ 1755.509 Mobile homes.

(a) Customer access location installations at mobile homes shall be treated the same whether the homes are mounted on permanent foundations or temporary foundations and shall be installed as specified in §§ 1755.500 through 1755.510. For the purpose of this section, mobile homes include manufactured homes, motor homes, truck campers, travel trailers, and all forms of recreational vehicles. Customer access location installations at mobile homes can be considerably different than customer access location installations at regular homes and borrowers shall be certain that the two types of installations are properly applied.

(b) The method of customer access location installation prescribed by the ANSI/NFPA 70–1999, *NEC*® for a mobile home depends on how the electric power is installed at the mobile home and it can involve considerable judgment on the part of the telecommunications installer. The *National Electrical Code*® and *NEC*® are registered trademarks of the National Fire Protection Association, Inc., Quincy, MA 02269. The ANSI/NFPA 70–1999, *NEC*®, is incorporated by reference in accordance with 5 U.S.C. 552(a) and 1 CFR part 51. Copies are available from NFPA, 1 Batterymarch Park, P. O. Box 9101, Quincy, Massachusetts 02269–9101, telephone number 1 (800) 344–3555. Copies of ANSI/NFPA 70–1999, *NEC*®, are available for inspection during normal business hours at RUS, room 2905, U.S. Department of Agriculture, 1400 Independence Avenue, SW., STOP 1598, Washington, DC 20250–1598, or at the National Archives and Records Administration (NARA). For information on the availability of this material at NARA, call 202–741–6030, or go to: *http://www.archives.gov/federal_register/code_of_federal_regulations/ibr_locations.html*. The ANSI/NFPA 70–1999, *NEC*®, requires primary station protectors to be located where specific acceptable grounding electrodes exist. The ANSI/NFPA 70–1999, *NEC*®, allows station protector installations to be at the location of the power meter or the electric disconnecting means apparatus serving the mobile home providing these electric facilities are installed in the manner specifically defined by the ANSI/NFPA 70–1999, *NEC*®. The ANSI/NFPA 70–1999, *NEC*®, requires the station protectors to be installed at the nearest of a number of other meticulously defined ANSI/NFPA 70–1999, *NEC*®, acceptable electrodes where the protector cannot be installed at the power meter or the electric disconnecting means apparatus serving the mobile home. The provisions can be confusing.

(c) NIDs shall be installed at mobile homes as follows:

(1) Where the mobile home electric service equipment (power meter, etc.,) or the electric service disconnecting means associated with the mobile home is located within 35 ft (10.7 m) of the exterior wall of the mobile homes it serves, the NID shall be installed in accordance with Figure 17 as follows: