AUTHENTICATED
U.S. GOVERNMENT
INFORMATION
GPO

FIGURE 5 TO PART 1633—DETAILS OF BURNER STAND-OFF

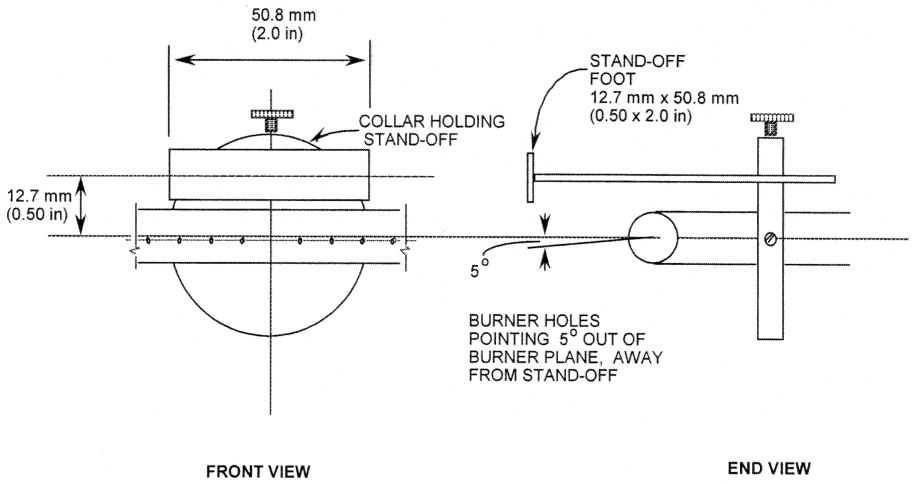

FIGURE 5. DETAILS OF BURNER STAND-OFF