AUTHENTICATED
U.S. GOVERNMENT
INFORMATION
GPO

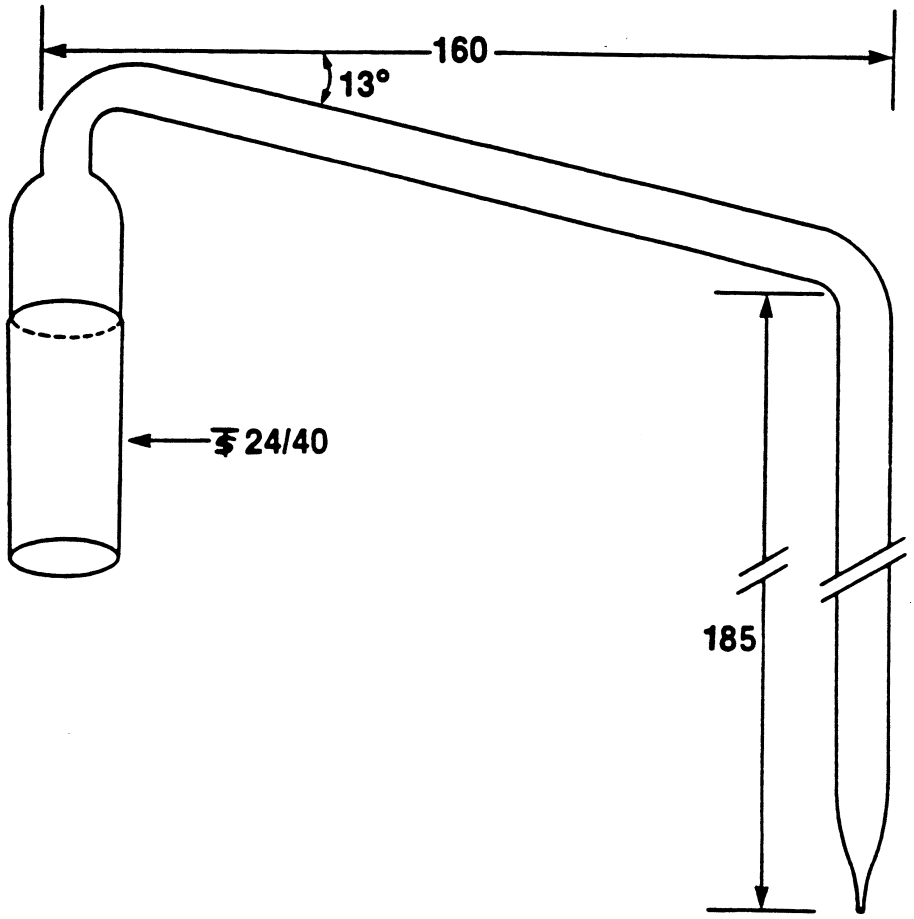

FIGURE 2. DIAGRAM OF BUBBLER (F IN FIGURE 1). LENGTHS ARE GIVEN IN MM.

[42 FR 14308, Mar. 15, 1977, as amended at 51 FR 25017, July 9, 1986]

APPENDIX B TO PART 101—GRAPHIC ENHANCEMENTS USED BY THE FDA

Examples of Graphic Enhancements used by the FDA

A.Overall

1. Nutrition Facts Label is boxed with all black or one color type printed on a white or neutral ground.

B. Typeface and size

1. The "Nutrition Facts" label uses 6 point or larger Helvetica Black and/or Helvetica Regular type. In order to fit some formats the typography may be kerned as much as -4, (tighter kerning reduces legibility).
2. Key nutrients & their % Daily Value are set in 8 point Helvetica Black (but "%" is set in Helvetica Regular).
3. "Nutrition Facts" is set in either Franklin Gothic Heavy or Helvetica Black to fit the width of the label flush left and flush right.
4. "Serving Size" and "Servings per container" are set in 8 point Helvetica Regular with 1 point of leading.
5. The table labels (for example; "Amount per Serving") are set 6 point Helvetica Black.
6. Absolute measures of nutrient content (for example; "1g") and nutrient subgroups are set in 8 point Helvetica Regular with 4 points of leading.
7. Vitamins and minerals are set in 8 point Helvetica Regular, with 4 points of leading, separated by 10 point bullets.
8. All type that appears under vitamins and minerals is set in 6 point Helvetica regular with 1 point of leading.

C. Rules

1. A 7 point rule separates large groupings as shown in example. A 3 point rule separates calorie information from the nutrient information.
2. A hairline rule or 1/4 point rule separates individual nutrients, as shown in the example. Descenders do not touch rule. The top half of the label (nutrient information) has 2 points of leading between the type and the rules, the bottom half of the label (footnotes) has 1 point of leading between the type and the rules.

D. Box

1. All labels are enclosed by 1/2 point box rule within 3 points of text measure.

Examples of Graphic Enhancements used by the FDA

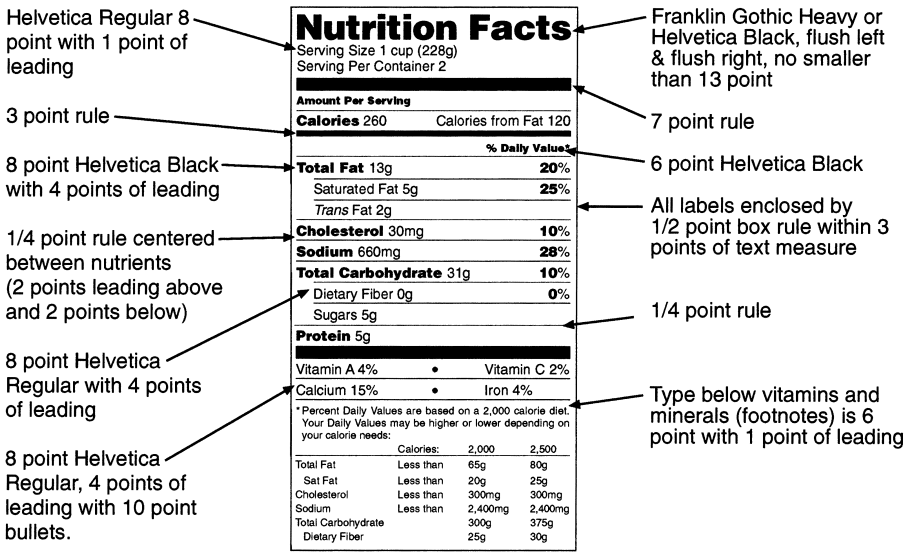

[58 FR 17332, Apr. 2, 1993, as amended at 70 FR 41506, July 11, 2005]