AUTHENTICATED
U.S. GOVERNMENT
INFORMATION
GPO

CHAPTER 3: BUILDING BLOCKS

301 General

301.1 Scope. The provisions of Chapter 3 shall apply where required by Chapter 2 or where referenced by a requirement in this document.

302 Floor or Ground Surfaces

302.1 General. Floor and ground surfaces shall be stable, firm, and slip resistant and shall comply with 302.

EXCEPTIONS: 1. Within animal containment areas, floor and ground surfaces shall not be required to be stable, firm, and slip resistant.

2. *Areas of sport activity* shall not be required to comply with 302.

> **Advisory 302.1 General.** A stable surface is one that remains unchanged by contaminants or applied force, so that when the contaminant or force is removed, the surface returns to its original condition. A firm surface resists deformation by either indentations or particles moving on its surface. A slip-resistant surface provides sufficient frictional counterforce to the forces exerted in walking to permit safe ambulation.

302.2 Carpet. Carpet or carpet tile shall be securely attached and shall have a firm cushion, pad, or backing or no cushion or pad. Carpet or carpet tile shall have a level loop, textured loop, level cut pile, or level cut/uncut pile texture. Pile height shall be ½ inch (13 mm) maximum. Exposed edges of carpet shall be fastened to floor surfaces and shall have trim on the entire length of the exposed edge. Carpet edge trim shall comply with 303.

> **Advisory 302.2 Carpet.** Carpets and permanently affixed mats can significantly increase the amount of force (roll resistance) needed to propel a wheelchair over a surface. The firmer the carpeting and backing, the lower the roll resistance. A pile thickness up to ½ inch (13 mm) (measured to the backing, cushion, or pad) is allowed, although a lower pile provides easier wheelchair maneuvering. If a backing, cushion or pad is used, it must be firm. Preferably, carpet pad should not be used because the soft padding increases roll resistance.

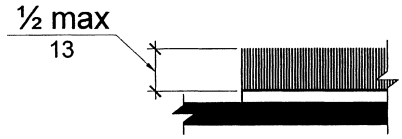

Figure 302.2
Carpet Pile Height

302.3 Openings. Openings in floor or ground surfaces shall not allow passage of a sphere more than ½ inch (13 mm) diameter except as allowed in 407.4.3, 409.4.3, 410.4, 810.5.3 and 810.10. Elongated openings shall be placed so that the long dimension is perpendicular to the dominant direction of travel.

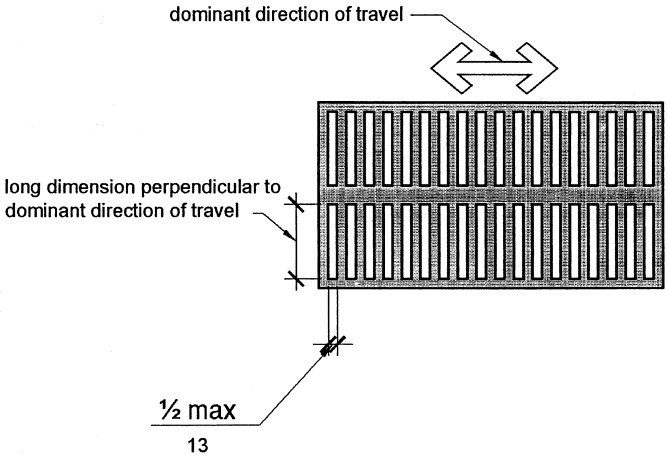

Figure 302.3
Elongated Openings in Floor or Ground Surfaces

303 Changes in Level

303.1 General. Where changes in level are permitted in floor or ground surfaces, they shall comply with 303.

EXCEPTIONS: 1. Animal containment areas shall not be required to comply with 303.

2. *Areas of sport activity* shall not be required to comply with 303.

303.2 Vertical. Changes in level of ¼ inch (6.4 mm) high maximum shall be permitted to be vertical.

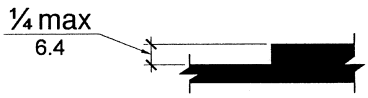

Figure 303.2
Vertical Change in Level

303.3 Beveled. Changes in level between ¼ inch (6.4 mm) high minimum and ½ inch (13 mm) high maximum shall be beveled with a slope not steeper than 1:2.

> **Advisory 303.3 Beveled.** A change in level of ½ inch (13 mm) is permitted to be ¼ inch (6.4 mm) vertical plus ¼ inch (6.4 mm) beveled. However, in no case may the combined change in level exceed ½ inch (13 mm). Changes in level exceeding ½ inch (13 mm) must comply with 405 (Ramps) or 406 (Curb Ramps).

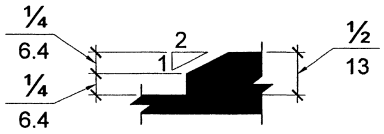

Figure 303.3
Beveled Change in Level

303.4 Ramps. Changes in level greater than ½ inch (13 mm) high shall be *ramped*, and shall comply with 405 or 406.

304 Turning Space

304.1 General. Turning *space* shall comply with 304.

304.2 Floor or Ground Surfaces. Floor or ground surfaces of a turning *space* shall comply with 302. Changes in level are not permitted.

EXCEPTION: Slopes not steeper than 1:48 shall be permitted.

> **Advisory 304.2 Floor or Ground Surface Exception.** As used in this section, the phrase "changes in level" refers to surfaces with slopes and to surfaces with abrupt rise exceeding that permitted in Section 303.3. Such changes in level are prohibited in required clear floor and ground spaces, turning spaces, and in similar spaces where people using wheelchairs and other mobility devices must park their mobility aids such as in wheelchair spaces, or maneuver to use elements such as at doors, fixtures, and telephones. The exception permits slopes not steeper than 1:48.

304.3 Size. Turning *space* shall comply with 304.3.1 or 304.3.2.

304.3.1 Circular Space. The turning *space* shall be a *space* of 60 inches (1525 mm) diameter minimum. The *space* shall be permitted to include knee and toe clearance complying with 306.

304.3.2 T-Shaped Space. The turning *space* shall be a T-shaped *space* within a 60 inch (1525 mm) square minimum with arms and base 36 inches (915 mm) wide minimum. Each arm of the T shall be clear of obstructions 12 inches (305 mm) minimum in each direction and the base shall be clear of

obstructions 24 inches (610 mm) minimum. The *space* shall be permitted to include knee and toe clearance complying with 306 only at the end of either the base or one arm.

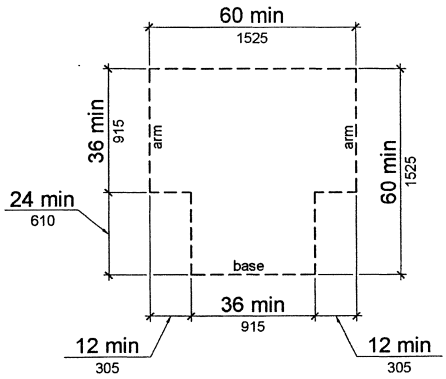

Figure 304.3.2
T-Shaped Turning Space

304.4 Door Swing. Doors shall be permitted to swing into turning *spaces*.

305 Clear Floor or Ground Space

305.1 General. Clear floor or ground *space* shall comply with 305.

305.2 Floor or Ground Surfaces. Floor or ground surfaces of a clear floor or ground *space* shall comply with 302. Changes in level are not permitted.

EXCEPTION: Slopes not steeper than 1:48 shall be permitted.

305.3 Size. The clear floor or ground *space* shall be 30 inches (760 mm) minimum by 48 inches (1220 mm) minimum.

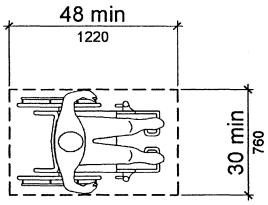

Figure 305.3
Clear Floor or Ground Space

305.4 Knee and Toe Clearance. Unless otherwise specified, clear floor or ground *space* shall be permitted to include knee and toe clearance complying with 306.

305.5 Position. Unless otherwise specified, clear floor or ground *space* shall be positioned for either forward or parallel approach to an *element*.

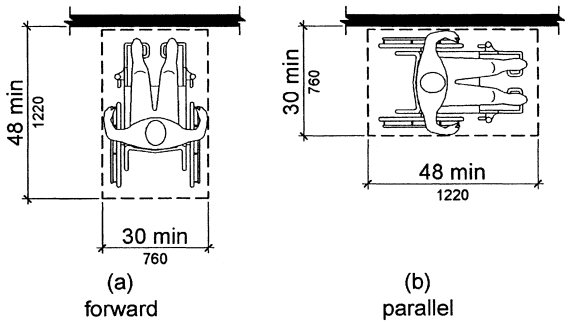

Figure 305.5
Position of Clear Floor or Ground Space

305.6 Approach. One full unobstructed side of the clear floor or ground *space* shall adjoin an *accessible* route or adjoin another clear floor or ground *space*.

305.7 Maneuvering Clearance. Where a clear floor or ground *space* is located in an alcove or otherwise confined on all or part of three sides, additional maneuvering clearance shall be provided in accordance with 305.7.1 and 305.7.2.

305.7.1 Forward Approach. Alcoves shall be 36 inches (915 mm)wide minimum where the depth exceeds 24 inches (610 mm).

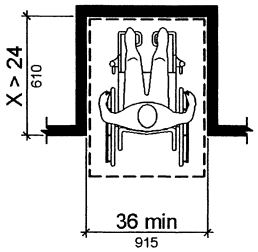

Figure 305.7.1
Maneuvering Clearance in an Alcove, Forward Approach

305.7.2 Parallel Approach. Alcoves shall be 60 inches (1525 mm) wide minimum where the depth exceeds 15 inches (380 mm).

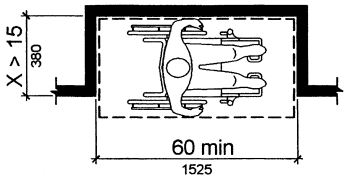

Figure 305.7.2
Maneuvering Clearance in an Alcove, Parallel Approach

306 Knee and Toe Clearance

306.1 General. Where *space* beneath an *element* is included as part of clear floor or ground *space* or turning *space*, the *space* shall comply with 306. Additional *space* shall not be prohibited beneath an *element* but shall not be considered as part of the clear floor or ground *space* or turning *space*.

> **Advisory 306.1 General.** Clearances are measured in relation to the usable clear floor space, not necessarily to the vertical support for an element. When determining clearance under an object for required turning or maneuvering space, care should be taken to ensure the space is clear of any obstructions.

306.2 Toe Clearance.

306.2.1 General. *Space* under an *element* between the finish floor or ground and 9 inches (230 mm) above the finish floor or ground shall be considered toe clearance and shall comply with 306.2.

306.2.2 Maximum Depth. Toe clearance shall extend 25 inches (635 mm) maximum under an *element*.

306.2.3 Minimum Required Depth. Where toe clearance is required at an *element* as part of a clear floor *space*, the toe clearance shall extend 17 inches (430 mm) minimum under the *element*.

306.2.4 Additional Clearance. *Space* extending greater than 6 inches (150 mm) beyond the available knee clearance at 9 inches (230 mm) above the finish floor or ground shall not be considered toe clearance.

306.2.5 Width. Toe clearance shall be 30 inches (760 mm) wide minimum.

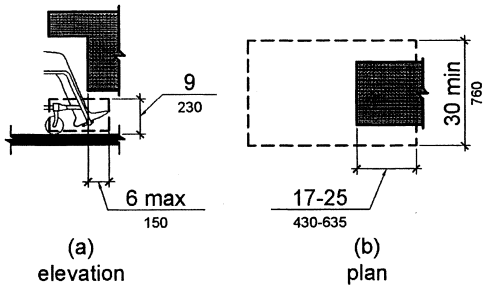

Figure 306.2
Toe Clearance

306.3 Knee Clearance.

306.3.1 General. *Space* under an *element* between 9 inches (230 mm) and 27 inches (685 mm) above the finish floor or ground shall be considered knee clearance and shall comply with 306.3.

306.3.2 Maximum Depth. Knee clearance shall extend 25 inches (635 mm) maximum under an *element* at 9 inches (230 mm) above the finish floor or ground.

306.3.3 Minimum Required Depth. Where knee clearance is required under an *element* as part of a clear floor *space*, the knee clearance shall be 11 inches (280 mm) deep minimum at 9 inches (230 mm) above the finish floor or ground, and 8 inches (205 mm) deep minimum at 27 inches (685 mm) above the finish floor or ground.

306.3.4 Clearance Reduction. Between 9 inches (230 mm) and 27 inches (685 mm) above the finish floor or ground, the knee clearance shall be permitted to reduce at a rate of 1 inch (25 mm) in depth for each 6 inches (150 mm) in height.

306.3.5 Width. Knee clearance shall be 30 inches (760 mm) wide minimum.

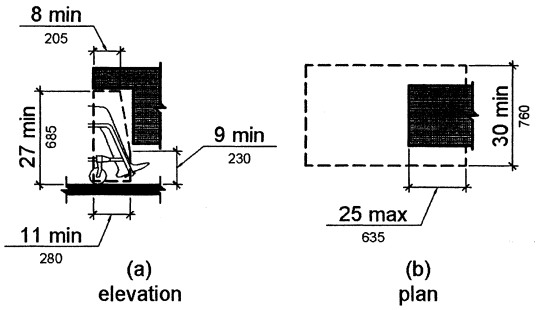

Figure 306.3
Knee Clearance

307 Protruding Objects

307.1 General. Protruding objects shall comply with 307.

307.2 Protrusion Limits. Objects with leading edges more than 27 inches (685 mm) and not more than 80 inches (2030 mm) above the finish floor or ground shall protrude 4 inches (100 mm) maximum horizontally into the *circulation path.*

EXCEPTION: Handrails shall be permitted to protrude 4½ inches (115 mm) maximum.

> **Advisory 307.2 Protrusion Limits.** When a cane is used and the element is in the detectable range, it gives a person sufficient time to detect the element with the cane before there is body contact. Elements located on circulation paths, including operable elements, must comply with requirements for protruding objects. For example, awnings and their supporting structures cannot reduce the minimum required vertical clearance. Similarly, casement windows, when open, cannot encroach more than 4 inches (100 mm) into circulation paths above 27 inches (685 mm).

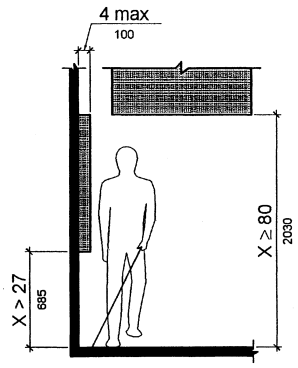

Figure 307.2
Limits of Protruding Objects

307.3 Post-Mounted Objects. Free-standing objects mounted on posts or pylons shall overhang *circulation paths* 12 inches (305 mm) maximum when located 27 inches (685 mm) minimum and 80 inches (2030 mm) maximum above the finish floor or ground. Where a sign or other obstruction is mounted between posts or pylons and the clear distance between the posts or pylons is greater than 12 inches (305 mm), the lowest edge of such sign or obstruction shall be 27 inches (685 mm) maximum or 80 inches (2030 mm) minimum above the finish floor or ground.

EXCEPTION: The sloping portions of handrails serving stairs and *ramps* shall not be required to comply with 307.3.

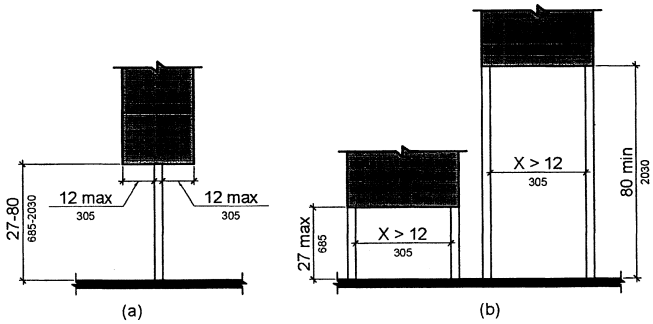

Figure 307.3
Post-Mounted Protruding Objects

307.4 Vertical Clearance. Vertical clearance shall be 80 inches (2030 mm) high minimum. Guardrails or other barriers shall be provided where the vertical clearance is less than 80 inches (2030 mm) high. The leading edge of such guardrail or barrier shall be located 27 inches (685 mm) maximum above the finish floor or ground.

EXCEPTION: Door closers and door stops shall be permitted to be 78 inches (1980 mm) minimum above the finish floor or ground.

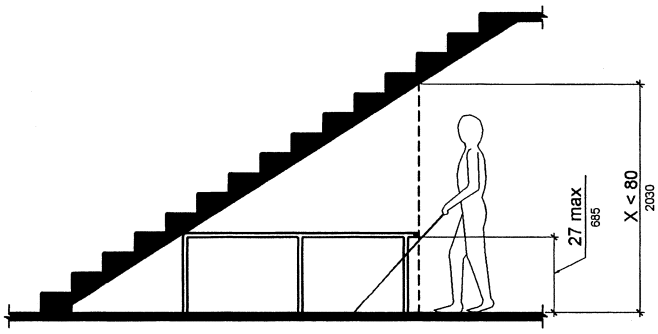

Figure 307.4
Vertical Clearance

307.5 Required Clear Width. Protruding objects shall not reduce the clear width required for *accessible* routes.

308 Reach Ranges

308.1 General. Reach ranges shall comply with 308.

Advisory 308.1 General. The following table provides guidance on reach ranges for children according to age where building elements such as coat hooks, lockers, or operable parts are designed for use primarily by children. These dimensions apply to either forward or side reaches. Accessible elements and operable parts designed for adult use or children over age 12 can be located outside these ranges but must be within the adult reach ranges required by 308.

Children's Reach Ranges			
Forward or Side Reach	**Ages 3 and 4**	**Ages 5 through 8**	**Ages 9 through 12**
High (maximum)	36 in (915 mm)	40 in (1015 mm)	44 in (1120 mm)
Low (minimum)	20 in (510 mm)	18 in (455 mm)	16 in (405 mm)

308.2 Forward Reach.

308.2.1 Unobstructed. Where a forward reach is unobstructed, the high forward reach shall be 48 inches (1220 mm) maximum and the low forward reach shall be 15 inches (380 mm) minimum above the finish floor or ground.

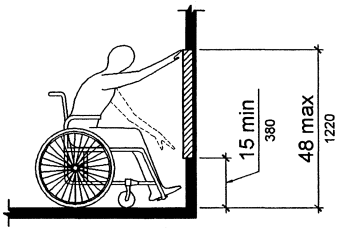

Figure 308.2.1
Unobstructed Forward Reach

308.2.2 Obstructed High Reach. Where a high forward reach is over an obstruction, the clear floor *space* shall extend beneath the *element* for a distance not less than the required reach depth over the obstruction. The high forward reach shall be 48 inches (1220 mm) maximum where the reach depth is 20 inches (510 mm) maximum. Where the reach depth exceeds 20 inches (510 mm), the high forward reach shall be 44 inches (1120 mm) maximum and the reach depth shall be 25 inches (635 mm) maximum.

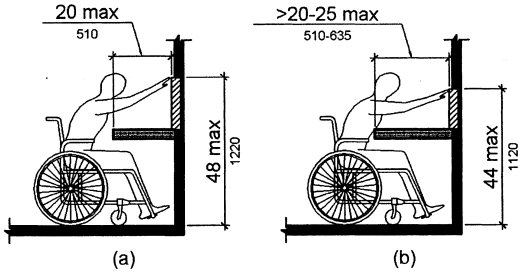

Figure 308.2.2
Obstructed High Forward Reach

308.3 Side Reach.

308.3.1 Unobstructed. Where a clear floor or ground *space* allows a parallel approach to an *element* and the side reach is unobstructed, the high side reach shall be 48 inches (1220 mm)

maximum and the low side reach shall be 15 inches (380 mm) minimum above the finish floor or ground.

EXCEPTIONS: 1. An obstruction shall be permitted between the clear floor or ground *space* and the *element* where the depth of the obstruction is 10 inches (255 mm) maximum.

2. *Operable parts* of fuel dispensers shall be permitted to be 54 inches (1370 mm) maximum measured from the surface of the *vehicular way* where fuel dispensers are installed on existing curbs.

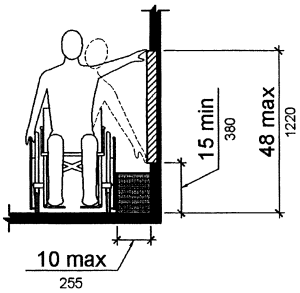

Figure 308.3.1
Unobstructed Side Reach

308.3.2 Obstructed High Reach. Where a clear floor or ground *space* allows a parallel approach to an *element* and the high side reach is over an obstruction, the height of the obstruction shall be 34 inches (865 mm) maximum and the depth of the obstruction shall be 24 inches (610 mm) maximum. The high side reach shall be 48 inches (1220 mm) maximum for a reach depth of 10 inches (255 mm) maximum. Where the reach depth exceeds 10 inches (255 mm), the high side reach shall be 46 inches (1170 mm) maximum for a reach depth of 24 inches (610 mm) maximum.

EXCEPTIONS: 1. The top of washing machines and clothes dryers shall be permitted to be 36 inches (915 mm) maximum above the finish floor.

2. *Operable parts* of fuel dispensers shall be permitted to be 54 inches (1370 mm) maximum measured from the surface of the *vehicular way* where fuel dispensers are installed on existing curbs.

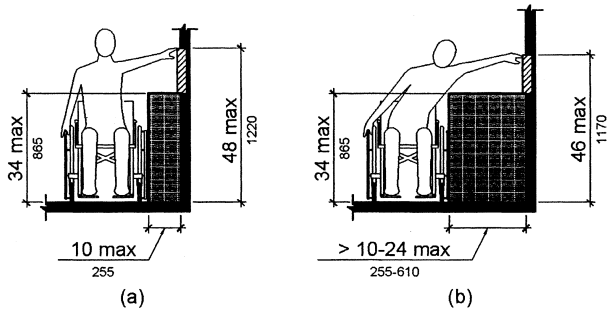

Figure 308.3.2
Obstructed High Side Reach

309 Operable Parts

309.1 General. *Operable parts* shall comply with 309.

309.2 Clear Floor Space. A clear floor or ground *space* complying with 305 shall be provided.

309.3 Height. *Operable parts* shall be placed within one or more of the reach ranges specified in 308.

309.4 Operation. *Operable parts* shall be operable with one hand and shall not require tight grasping, pinching, or twisting of the wrist. The force required to activate *operable parts* shall be 5 pounds (22.2 N) maximum.

EXCEPTION: Gas pump nozzles shall not be required to provide *operable parts* that have an activating force of 5 pounds (22.2 N) maximum.

CHAPTER 4: ACCESSIBLE ROUTES

401 General

401.1 Scope. The provisions of Chapter 4 shall apply where required by Chapter 2 or where referenced by a requirement in this document.

402 Accessible Routes

402.1 General. *Accessible* routes shall comply with 402.

402.2 Components. *Accessible* routes shall consist of one or more of the following components: walking surfaces with a *running slope* not steeper than 1:20, doorways, *ramps*, *curb ramps* excluding the flared sides, elevators, and platform lifts. All components of an *accessible* route shall comply with the applicable requirements of Chapter 4.

> **Advisory 402.2 Components.** Walking surfaces must have running slopes not steeper than 1:20, see 403.3. Other components of accessible routes, such as ramps (405) and curb ramps (406), are permitted to be more steeply sloped.

403 Walking Surfaces

403.1 General. Walking surfaces that are a part of an *accessible* route shall comply with 403.

403.2 Floor or Ground Surface. Floor or ground surfaces shall comply with 302.

403.3 Slope. The *running slope* of walking surfaces shall not be steeper than 1:20. The *cross slope* of walking surfaces shall not be steeper than 1:48.

403.4 Changes in Level. Changes in level shall comply with 303.

403.5 Clearances. Walking surfaces shall provide clearances complying with 403.5.

EXCEPTION: Within *employee work areas*, clearances on *common use circulation paths* shall be permitted to be decreased by *work area equipment* provided that the decrease is essential to the function of the work being performed.

403.5.1 Clear Width. Except as provided in 403.5.2 and 403.5.3, the clear width of walking surfaces shall be 36 inches (915 mm) minimum.

EXCEPTION: The clear width shall be permitted to be reduced to 32 inches (815 mm) minimum for a length of 24 inches (610 mm) maximum provided that reduced width segments are separated by segments that are 48 inches (1220 mm) long minimum and 36 inches (915 mm) wide minimum.

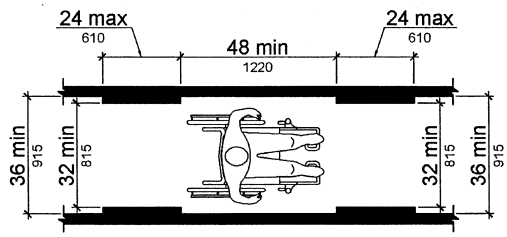

Figure 403.5.1
Clear Width of an Accessible Route

403.5.2 Clear Width at Turn. Where the *accessible* route makes a 180 degree turn around an *element* which is less than 48 inches (1220 mm) wide, clear width shall be 42 inches (1065 mm) minimum approaching the turn, 48 inches (1220 mm) minimum at the turn and 42 inches (1065 mm) minimum leaving the turn.

EXCEPTION: Where the clear width at the turn is 60 inches (1525 mm) minimum compliance with 403.5.2 shall not be required.

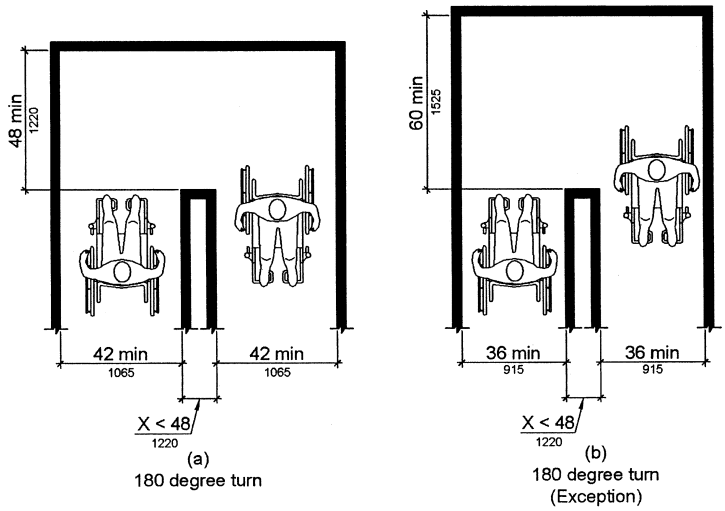

Figure 403.5.2
Clear Width at Turn

403.5.3 Passing Spaces. An *accessible* route with a clear width less than 60 inches (1525 mm) shall provide passing *spaces* at intervals of 200 feet (61 m) maximum. Passing *spaces* shall be either: a *space* 60 inches (1525 mm) minimum by 60 inches (1525 mm) minimum; or, an intersection of two walking surfaces providing a T-shaped *space* complying with 304.3.2 where the base and arms of the T-shaped *space* extend 48 inches (1220 mm) minimum beyond the intersection.

403.6 Handrails. Where handrails are provided along walking surfaces with *running slopes* not steeper than 1:20 they shall comply with 505.

> **Advisory 403.6 Handrails.** Handrails provided in elevator cabs and platform lifts are not required to comply with the requirements for handrails on walking surfaces.

404 Doors, Doorways, and Gates

404.1 General. Doors, doorways, and gates that are part of an *accessible* route shall comply with 404.
EXCEPTION: Doors, doorways, and gates designed to be operated only by security personnel shall not be required to comply with 404.2.7, 404.2.8, 404.2.9, 404.3.2 and 404.3.4 through 404.3.7.

> **Advisory 404.1 General Exception.** Security personnel must have sole control of doors that are eligible for the Exception at 404.1. It would not be acceptable for security personnel to operate the doors for people with disabilities while allowing others to have independent access.

404.2 Manual Doors, Doorways, and Manual Gates. Manual doors and doorways and manual gates intended for user passage shall comply with 404.2.

404.2.1 Revolving Doors, Gates, and Turnstiles. Revolving doors, revolving gates, and turnstiles shall not be part of an *accessible* route.

404.2.2 Double-Leaf Doors and Gates. At least one of the active leaves of doorways with two leaves shall comply with 404.2.3 and 404.2.4.

404.2.3 Clear Width. Door openings shall provide a clear width of 32 inches (815 mm) minimum. Clear openings of doorways with swinging doors shall be measured between the face of the door and the stop, with the door open 90 degrees. Openings more than 24 inches (610 mm) deep shall provide a clear opening of 36 inches (915 mm) minimum. There shall be no projections into the required clear opening width lower than 34 inches (865 mm) above the finish floor or ground. Projections into the clear opening width between 34 inches (865 mm) and 80 inches (2030 mm) above the finish floor or ground shall not exceed 4 inches (100 mm).
EXCEPTIONS: 1. In *alterations*, a projection of 5/8 inch (16 mm) maximum into the required clear width shall be permitted for the latch side stop.
2. Door closers and door stops shall be permitted to be 78 inches (1980 mm) minimum above the finish floor or ground.

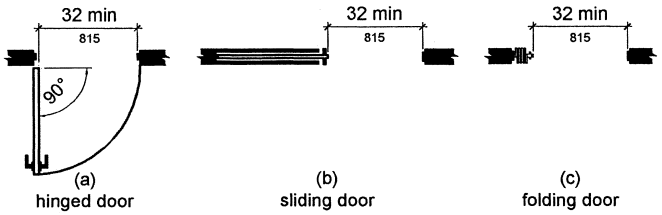

Figure 404.2.3
Clear Width of Doorways

404.2.4 Maneuvering Clearances. Minimum maneuvering clearances at doors and gates shall comply with 404.2.4. Maneuvering clearances shall extend the full width of the doorway and the required latch side or hinge side clearance.

EXCEPTION: Entry doors to hospital patient rooms shall not be required to provide the clearance beyond the latch side of the door.

404.2.4.1 Swinging Doors and Gates. Swinging doors and gates shall have maneuvering clearances complying with Table 404.2.4.1.

Table 404.2.4.1 Maneuvering Clearances at Manual Swinging Doors and Gates

Type of Use		Minimum Maneuvering Clearance	
Approach Direction	**Door or Gate Side**	**Perpendicular to Doorway**	**Parallel to Doorway (beyond latch side unless noted)**
From front	Pull	60 inches (1525 mm)	18 inches (455 mm)
From front	Push	48 inches (1220 mm)	0 inches (0 mm)[1]
From hinge side	Pull	60 inches (1525 mm)	36 inches (915 mm)
From hinge side	Pull	54 inches (1370 mm)	42 inches (1065 mm)
From hinge side	Push	42 inches (1065 mm)[2]	22 inches (560 mm)[3]
From latch side	Pull	48 inches (1220 mm)[4]	24 inches (610 mm)
From latch side	Push	42 inches (1065 mm)[4]	24 inches (610 mm)

1. Add 12 inches (305 mm) if closer and latch are provided.
2. Add 6 inches (150 mm) if closer and latch are provided.
3. Beyond hinge side.
4. Add 6 inches (150 mm) if closer is provided.

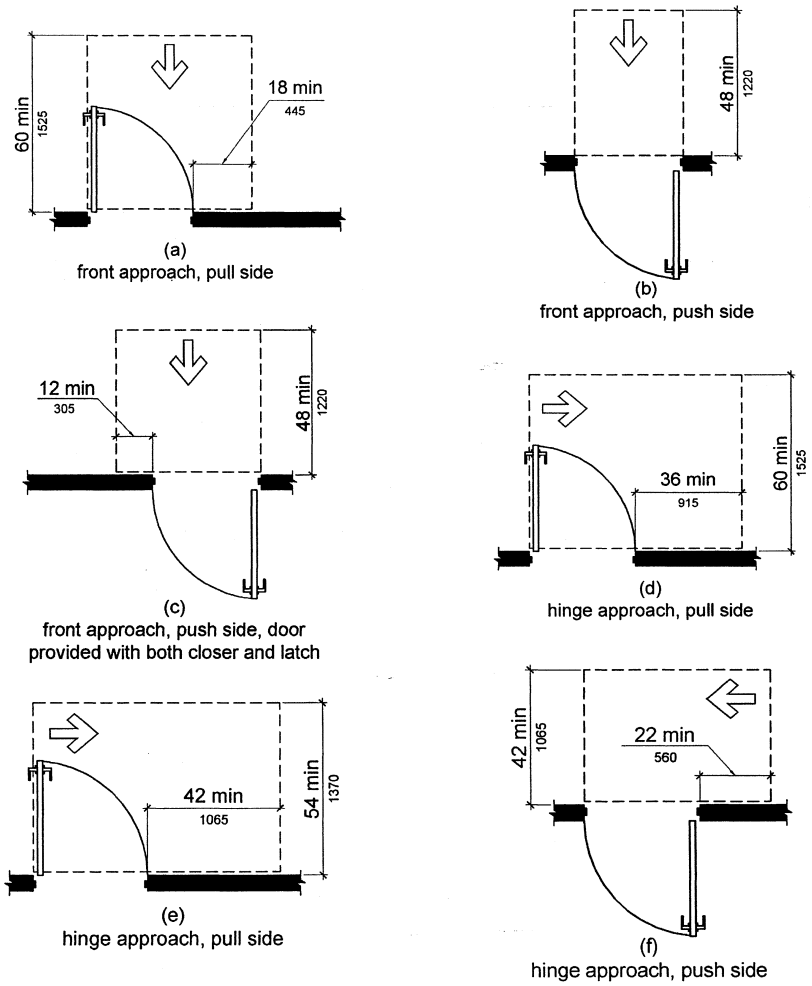

Figure 404.2.4.1
Maneuvering Clearances at Manual Swinging Doors and Gates

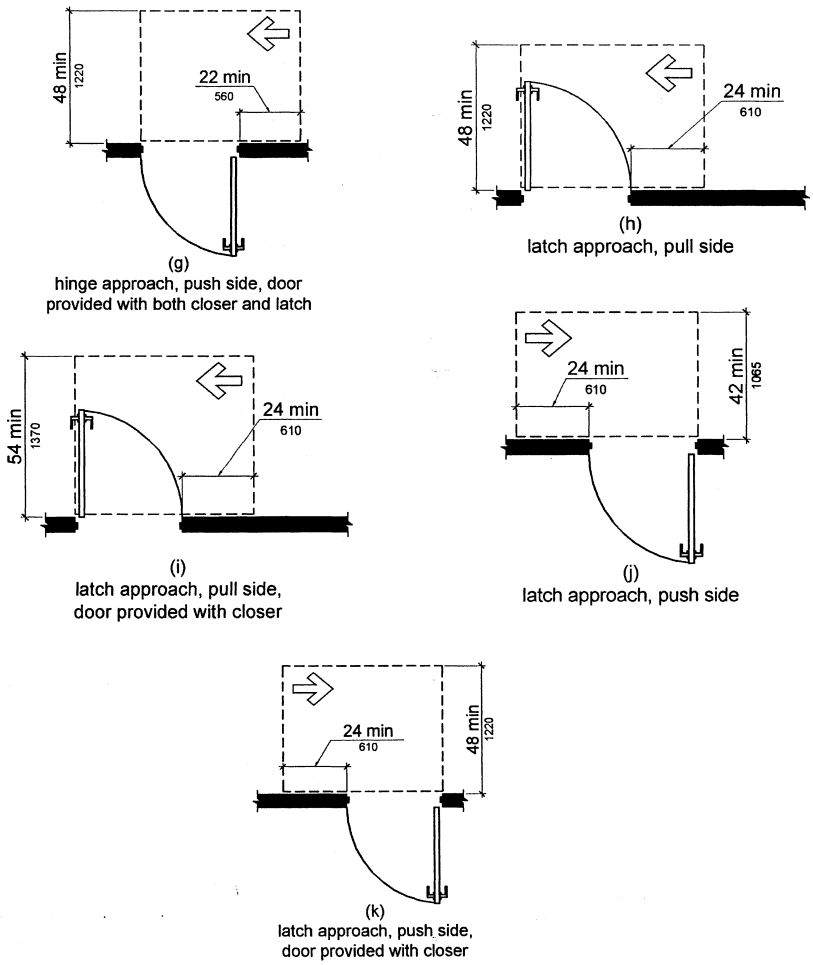

Figure 404.2.4.1
Maneuvering Clearances at Manual Swinging Doors and Gates

404.2.4.2 Doorways without Doors or Gates, Sliding Doors, and Folding Doors. Doorways less than 36 inches (915 mm) wide without doors or gates, sliding doors, or folding doors shall have maneuvering clearances complying with Table 404.2.4.2.

Table 404.2.4.2 Maneuvering Clearances at Doorways without Doors or Gates, Manual Sliding Doors, and Manual Folding Doors

	Minimum Maneuvering Clearance	
Approach Direction	**Perpendicular to Doorway**	**Parallel to Doorway (beyond stop/latch side unless noted)**
From Front	48 inches (1220 mm)	0 inches (0 mm)
From side[1]	42 inches (1065 mm)	0 inches (0 mm)
From pocket/hinge side	42 inches (1065 mm)	22 inches (560 mm)[2]
From stop/latch side	42 inches (1065 mm)	24 inches (610 mm)

1. Doorway with no door only.
2. Beyond pocket/hinge side.

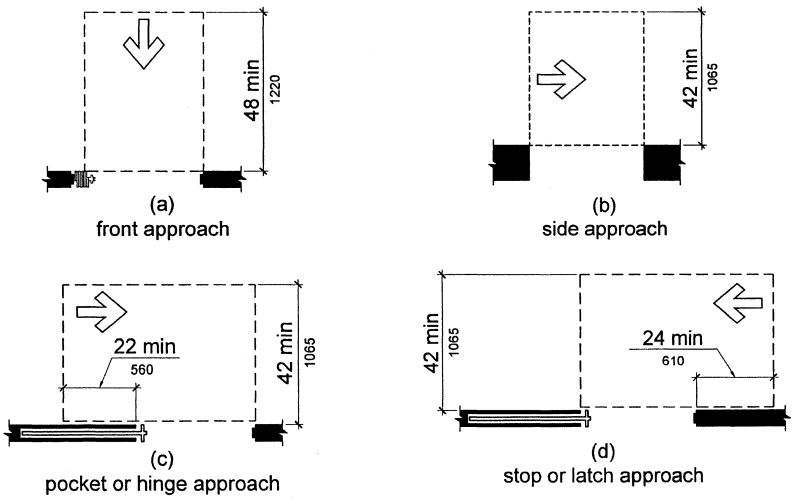

Figure 404.2.4.2
Maneuvering Clearances at Doorways without Doors, Sliding Doors, Gates, and Folding Doors

404.2.4.3 Recessed Doors and Gates. Maneuvering clearances for forward approach shall be provided when any obstruction within 18 inches (455 mm) of the latch side of a doorway projects more than 8 inches (205 mm) beyond the face of the door, measured perpendicular to the face of the door or gate.

Advisory 404.2.4.3 Recessed Doors and Gates. A door can be recessed due to wall thickness or because of the placement of casework and other fixed elements adjacent to the doorway. This provision must be applied wherever doors are recessed.

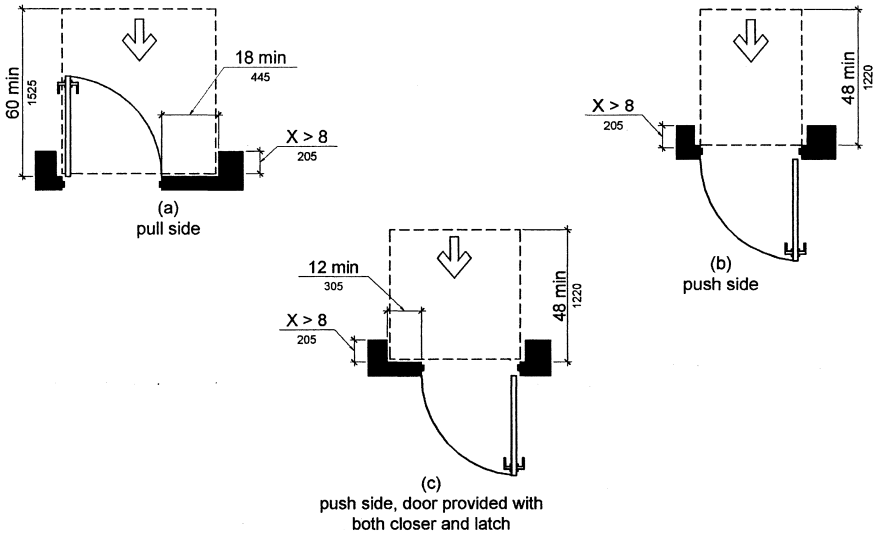

Figure 404.2.4.3
Maneuvering Clearances at Recessed Doors and Gates

404.2.4.4 Floor or Ground Surface. Floor or ground surface within required maneuvering clearances shall comply with 302. Changes in level are not permitted.

EXCEPTIONS: 1. Slopes not steeper than 1:48 shall be permitted.

2. Changes in level at thresholds complying with 404.2.5 shall be permitted.

404.2.5 Thresholds. Thresholds, if provided at doorways, shall be ½ inch (13 mm) high maximum. Raised thresholds and changes in level at doorways shall comply with 302 and 303.

EXCEPTION: Existing or *altered* thresholds ¾ inch (19 mm) high maximum that have a beveled edge on each side with a slope not steeper than 1:2 shall not be required to comply with 404.2.5.

404.2.6 Doors in Series and Gates in Series. The distance between two hinged or pivoted doors in series and gates in series shall be 48 inches (1220 mm) minimum plus the width of doors or gates swinging into the *space*.

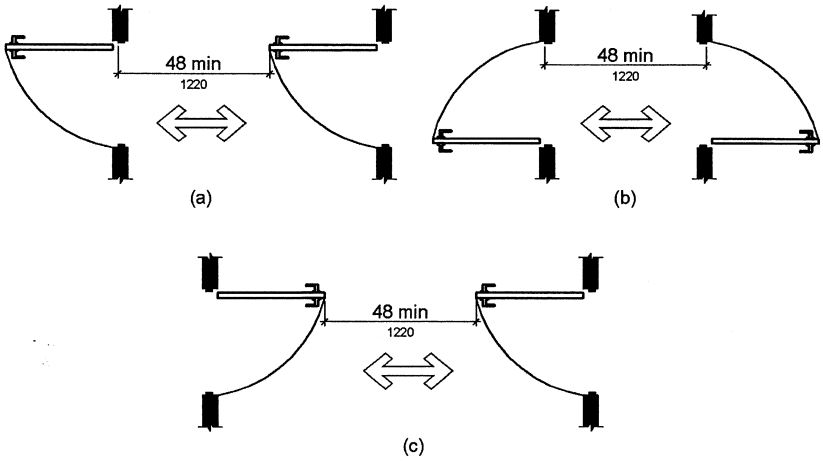

Figure 404.2.6
Doors in Series and Gates in Series

404.2.7 Door and Gate Hardware. Handles, pulls, latches, locks, and other *operable parts* on doors and gates shall comply with 309.4. *Operable parts* of such hardware shall be 34 inches (865 mm) minimum and 48 inches (1220 mm) maximum above the finish floor or ground. Where sliding doors are in the fully open position, operating hardware shall be exposed and usable from both sides.

EXCEPTIONS: 1. Existing locks shall be permitted in any location at existing glazed doors without stiles, existing overhead rolling doors or grilles, and similar existing doors or grilles that are designed with locks that are activated only at the top or bottom rail.

2. Access gates in barrier walls and fences protecting pools, spas, and hot tubs shall be permitted to have *operable parts* of the release of latch on self-latching devices at 54 inches (1370 mm) maximum above the finish floor or ground provided the self-latching devices are not also self-locking devices and operated by means of a key, electronic opener, or integral combination lock.

Advisory 404.2.7 Door and Gate Hardware. Door hardware that can be operated with a closed fist or a loose grip accommodates the greatest range of users. Hardware that requires simultaneous hand and finger movements require greater dexterity and coordination, and is not recommended.

404.2.8 Closing Speed. Door and gate closing speed shall comply with 404.2.8.

404.2.8.1 Door Closers and Gate Closers. Door closers and gate closers shall be adjusted so that from an open position of 90 degrees, the time required to move the door to a position of 12 degrees from the latch is 5 seconds minimum.

404.2.8.2 Spring Hinges. Door and gate spring hinges shall be adjusted so that from the open position of 70 degrees, the door or gate shall move to the closed position in 1.5 seconds minimum.

404.2.9 Door and Gate Opening Force. Fire doors shall have a minimum opening force allowable by the appropriate *administrative authority.* The force for pushing or pulling open a door or gate other than fire doors shall be as follows:

1. Interior hinged doors and gates: 5 pounds (22.2 N) maximum.
2. Sliding or folding doors: 5 pounds (22.2 N) maximum.

These forces do not apply to the force required to retract latch bolts or disengage other devices that hold the door or gate in a closed position.

Advisory 404.2.9 Door and Gate Opening Force. The maximum force pertains to the continuous application of force necessary to fully open a door, not the initial force needed to overcome the inertia of the door. It does not apply to the force required to retract bolts or to disengage other devices used to keep the door in a closed position.

404.2.10 Door and Gate Surfaces. Swinging door and gate surfaces within 10 inches (255 mm) of the finish floor or ground measured vertically shall have a smooth surface on the push side extending the full width of the door or gate. Parts creating horizontal or vertical joints in these surfaces shall be within 1/16 inch (1.6 mm) of the same plane as the other. Cavities created by added kick plates shall be capped.

EXCEPTIONS: 1. Sliding doors shall not be required to comply with 404.2.10.

2. Tempered glass doors without stiles and having a bottom rail or shoe with the top leading edge tapered at 60 degrees minimum from the horizontal shall not be required to meet the 10 inch (255 mm) bottom smooth surface height requirement.

3. Doors and gates that do not extend to within 10 inches (255 mm) of the finish floor or ground shall not be required to comply with 404.2.10.

4. Existing doors and gates without smooth surfaces within 10 inches (255 mm) of the finish floor or ground shall not be required to provide smooth surfaces complying with 404.2.10 provided that if added kick plates are installed, cavities created by such kick plates are capped.

404.2.11 Vision Lights. Doors, gates, and side lights adjacent to doors or gates, containing one or more glazing panels that permit viewing through the panels shall have the bottom of at least one glazed panel located 43 inches (1090 mm) maximum above the finish floor.

EXCEPTION: Vision lights with the lowest part more than 66 inches (1675 mm) from the finish floor or ground shall not be required to comply with 404.2.11.

404.3 Automatic and Power-Assisted Doors and Gates. Automatic doors and automatic gates shall comply with 404.3. Full-powered automatic doors shall comply with ANSI/BHMA A156.10 (incorporated

by reference, see "Referenced Standards" in Chapter 1). Low-energy and power-assisted doors shall comply with ANSI/BHMA A156.19 (1997 or 2002 edition) (incorporated by reference, see "Referenced Standards" in Chapter 1).

404.3.1 Clear Width. Doorways shall provide a clear opening of 32 inches (815 mm) minimum in power-on and power-off mode. The minimum clear width for automatic door systems in a doorway shall be based on the clear opening provided by all leaves in the open position.

404.3.2 Maneuvering Clearance. Clearances at power-assisted doors and gates shall comply with 404.2.4. Clearances at automatic doors and gates without standby power and serving an *accessible means of egress* shall comply with 404.2.4.

EXCEPTION: Where automatic doors and gates remain open in the power-off condition, compliance with 404.2.4 shall not be required.

404.3.3 Thresholds. Thresholds and changes in level at doorways shall comply with 404.2.5.

404.3.4 Doors in Series and Gates in Series. Doors in series and gates in series shall comply with 404.2.6.

404.3.5 Controls. Manually operated controls shall comply with 309. The clear floor *space* adjacent to the control shall be located beyond the arc of the door swing.

404.3.6 Break Out Opening. Where doors and gates without standby power are a part of a means of egress, the clear break out opening at swinging or sliding doors and gates shall be 32 inches (815 mm) minimum when operated in emergency mode.

EXCEPTION: Where manual swinging doors and gates comply with 404.2 and serve the same means of egress compliance with 404.3.6 shall not be required.

404.3.7 Revolving Doors, Revolving Gates, and Turnstiles. Revolving doors, revolving gates, and turnstiles shall not be part of an *accessible* route.

405 Ramps

405.1 General. *Ramps* on *accessible* routes shall comply with 405.

EXCEPTION: In *assembly areas*, aisle *ramps* adjacent to seating and not serving *elements* required to be on an *accessible* route shall not be required to comply with 405.

405.2 Slope. *Ramp* runs shall have a *running slope* not steeper than 1:12.

EXCEPTION: In existing *sites*, *buildings*, and *facilities*, *ramps* shall be permitted to have *running slopes* steeper than 1:12 complying with Table 405.2 where such slopes are necessary due to *space* limitations.

Table 405.2 Maximum Ramp Slope and Rise for Existing Sites, Buildings, and Facilities

Slope[1]	Maximum Rise
Steeper than 1:10 but not steeper than 1:8	3 inches (75 mm)
Steeper than 1:12 but not steeper than 1:10	6 inches (150 mm)

1. A slope steeper than 1:8 is prohibited.

Advisory 405.2 Slope. To accommodate the widest range of users, provide ramps with the least possible running slope and, wherever possible, accompany ramps with stairs for use by those individuals for whom distance presents a greater barrier than steps, e.g., people with heart disease or limited stamina.

405.3 Cross Slope. *Cross slope* of *ramp* runs shall not be steeper than 1:48.

Advisory 405.3 Cross Slope. Cross slope is the slope of the surface perpendicular to the direction of travel. Cross slope is measured the same way as slope is measured (i.e., the rise over the run).

405.4 Floor or Ground Surfaces. Floor or ground surfaces of *ramp* runs shall comply with 302. Changes in level other than the *running slope* and *cross slope* are not permitted on *ramp* runs.

405.5 Clear Width. The clear width of a *ramp* run and, where handrails are provided, the clear width between handrails shall be 36 inches (915 mm) minimum.

EXCEPTION: Within *employee work areas*, the required clear width of *ramps* that are a part of *common use circulation paths* shall be permitted to be decreased by *work area equipment* provided that the decrease is essential to the function of the work being performed.

405.6 Rise. The rise for any *ramp* run shall be 30 inches (760 mm) maximum.

405.7 Landings. *Ramps* shall have landings at the top and the bottom of each *ramp* run. Landings shall comply with 405.7.

Advisory 405.7 Landings. Ramps that do not have level landings at changes in direction can create a compound slope that will not meet the requirements of this document. Circular or curved ramps continually change direction. Curvilinear ramps with small radii also can create compound cross slopes and cannot, by their nature, meet the requirements for accessible routes. A level landing is needed at the accessible door to permit maneuvering and simultaneously door operation.

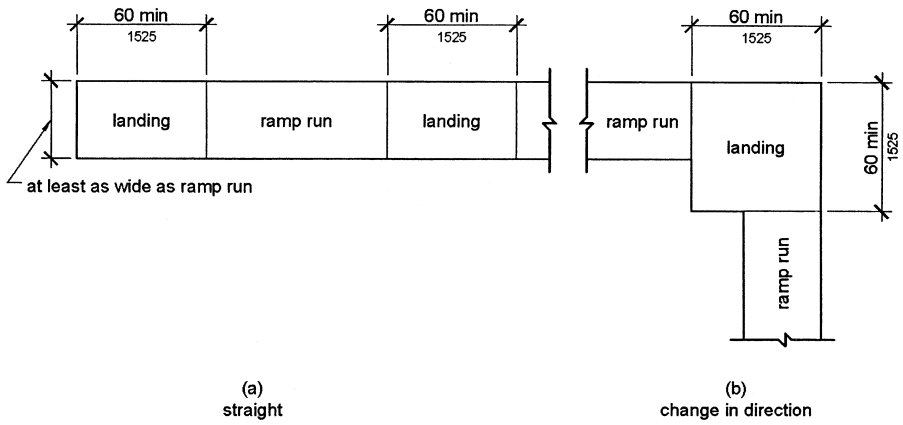

Figure 405.7
Ramp Landings

405.7.1 Slope. Landings shall comply with 302. Changes in level are not permitted.
EXCEPTION: Slopes not steeper than 1:48 shall be permitted.

405.7.2 Width. The landing clear width shall be at least as wide as the widest *ramp* run leading to the landing.

405.7.3 Length. The landing clear length shall be 60 inches (1525 mm) long minimum.

405.7.4 Change in Direction. *Ramps* that change direction between runs at landings shall have a clear landing 60 inches (1525 mm) minimum by 60 inches (1525 mm) minimum.

405.7.5 Doorways. Where doorways are located adjacent to a *ramp* landing, maneuvering clearances required by 404.2.4 and 404.3.2 shall be permitted to overlap the required landing area.

405.8 Handrails. *Ramp* runs with a rise greater than 6 inches (150 mm) shall have handrails complying with 505.
EXCEPTION: Within *employee work areas*, handrails shall not be required where *ramps* that are part of *common use circulation paths* are designed to permit the installation of handrails complying with 505. *Ramps* not subject to the exception to 405.5 shall be designed to maintain a 36 inch (915 mm) minimum clear width when handrails are installed.

405.9 Edge Protection. Edge protection complying with 405.9.1 or 405.9.2 shall be provided on each side of *ramp* runs and at each side of *ramp* landings.

EXCEPTIONS: 1. Edge protection shall not be required on *ramps* that are not required to have handrails and have sides complying with 406.3.
2. Edge protection shall not be required on the sides of *ramp* landings serving an adjoining *ramp* run or stairway.
3. Edge protection shall not be required on the sides of *ramp* landings having a vertical drop-off of ½ inch (13 mm) maximum within 10 inches (255 mm) horizontally of the minimum landing area specified in 405.7.

405.9.1 Extended Floor or Ground Surface. The floor or ground surface of the *ramp* run or landing shall extend 12 inches (305 mm) minimum beyond the inside face of a handrail complying with 505.

Advisory 405.9.1 Extended Floor or Ground Surface. The extended surface prevents wheelchair casters and crutch tips from slipping off the ramp surface.

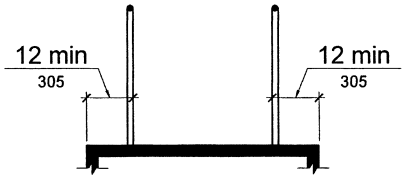

Figure 405.9.1
Extended Floor or Ground Surface Edge Protection

405.9.2 Curb or Barrier. A curb or barrier shall be provided that prevents the passage of a 4 inch (100 mm) diameter sphere, where any portion of the sphere is within 4 inches (100 mm) of the finish floor or ground surface.

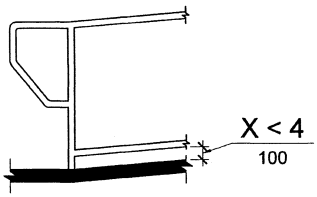

Figure 405.9.2
Curb or Barrier Edge Protection

405.10 Wet Conditions. Landings subject to wet conditions shall be designed to prevent the accumulation of water.

406 Curb Ramps

406.1 General. *Curb ramps* on *accessible* routes shall comply with 406, 405.2 through 405.5, and 405.10.

406.2 Counter Slope. Counter slopes of adjoining gutters and road surfaces immediately adjacent to the *curb ramp* shall not be steeper than 1:20. The adjacent surfaces at transitions at *curb ramps* to *walks*, gutters, and streets shall be at the same level.

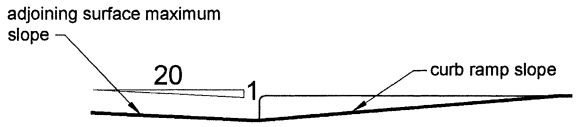

Figure 406.2
Counter Slope of Surfaces Adjacent to Curb Ramps

406.3 Sides of Curb Ramps. Where provided, *curb ramp* flares shall not be steeper than 1:10.

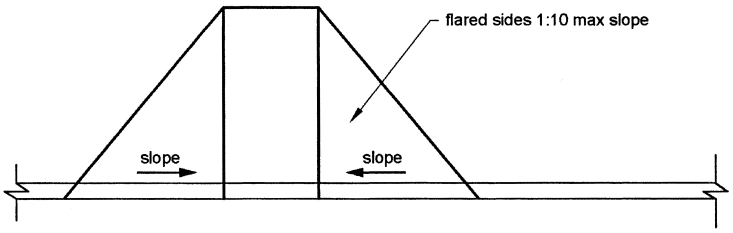

Figure 406.3
Sides of Curb Ramps

406.4 Landings. Landings shall be provided at the tops of *curb ramps*. The landing clear length shall be 36 inches (915 mm) minimum. The landing clear width shall be at least as wide as the *curb ramp*, excluding flared sides, leading to the landing.

EXCEPTION: In *alterations*, where there is no landing at the top of *curb ramps*, *curb ramp* flares shall be provided and shall not be steeper than 1:12.

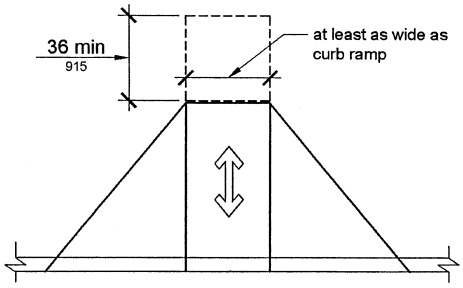

Figure 406.4
Landings at the Top of Curb Ramps

406.5 Location. *Curb ramps* and the flared sides of *curb ramps* shall be located so that they do not project into vehicular traffic lanes, parking *spaces*, or parking access aisles. *Curb ramps* at *marked crossings* shall be wholly contained within the markings, excluding any flared sides.

406.6 Diagonal Curb Ramps. Diagonal or corner type *curb ramps* with returned curbs or other well-defined edges shall have the edges parallel to the direction of pedestrian flow. The bottom of diagonal *curb ramps* shall have a clear *space* 48 inches (1220 mm) minimum outside active traffic lanes of the roadway. Diagonal *curb ramps* provided at *marked crossings* shall provide the 48 inches (1220 mm) minimum clear *space* within the markings. Diagonal *curb ramps* with flared sides shall have a segment of curb 24 inches (610 mm) long minimum located on each side of the *curb ramp* and within the *marked crossing*.

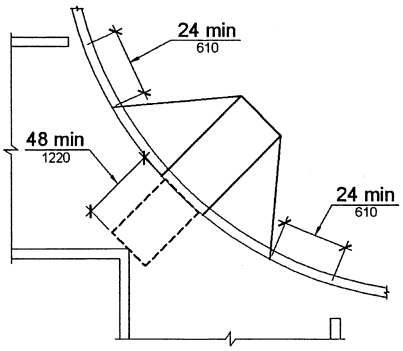

Figure 406.6
Diagonal or Corner Type Curb Ramps

406.7 Islands. Raised islands in crossings shall be cut through level with the street or have *curb ramps* at both sides. Each *curb ramp* shall have a level area 48 inches (1220 mm) long minimum by 36 inches (915 mm) wide minimum at the top of the *curb ramp* in the part of the island intersected by the crossings. Each 48 inch (1220 mm) minimum by 36 inch (915 mm) minimum area shall be oriented so that the 48 inch (1220 mm) minimum length is in the direction of the *running slope* of the *curb ramp* it serves. The 48 inch (1220 mm) minimum by 36 inch (915 mm) minimum areas and the *accessible* route shall be permitted to overlap.

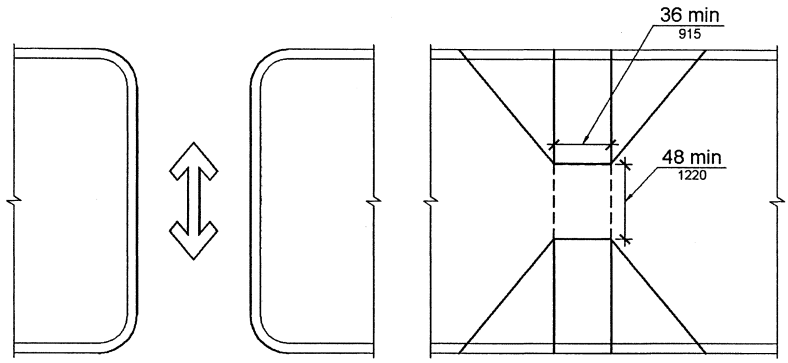

(a)
cut through at island

(b)
curb ramp at island

Figure 406.7
Islands in Crossings

407 Elevators

407.1 General. Elevators shall comply with 407 and with ASME A17.1 (incorporated by reference, see "Referenced Standards" in Chapter 1). They shall be passenger elevators as classified by ASME A17.1. Elevator operation shall be automatic.

> **Advisory 407.1 General.** The ADA and other Federal civil rights laws require that accessible features be maintained in working order so that they are accessible to and usable by those people they are intended to benefit. Building owners should note that the ASME Safety Code for Elevators and Escalators requires routine maintenance and inspections. Isolated or temporary interruptions in service due to maintenance or repairs may be unavoidable; however, failure to take prompt action to effect repairs could constitute a violation of Federal laws and these requirements.

407.2 Elevator Landing Requirements. Elevator landings shall comply with 407.2.

407.2.1 Call Controls. Where elevator call buttons or keypads are provided, they shall comply with 407.2.1 and 309.4. Call buttons shall be raised or flush.

EXCEPTION: Existing elevators shall be permitted to have recessed call buttons.

407.2.1.1 Height. Call buttons and keypads shall be located within one of the reach ranges specified in 308, measured to the centerline of the highest *operable part.*

EXCEPTION: Existing call buttons and existing keypads shall be permitted to be located at 54 inches (1370 mm) maximum above the finish floor, measured to the centerline of the highest *operable part.*

407.2.1.2 Size. Call buttons shall be ¾ inch (19 mm) minimum in the smallest dimension.

EXCEPTION: Existing elevator call buttons shall not be required to comply with 407.2.1.2.

407.2.1.3 Clear Floor or Ground Space. A clear floor or ground *space* complying with 305 shall be provided at call controls.

Advisory 407.2.1.3 Clear Floor or Ground Space. The clear floor or ground space required at elevator call buttons must remain free of obstructions including ashtrays, plants, and other decorative elements that prevent wheelchair users and others from reaching the call buttons. The height of the clear floor or ground space is considered to be a volume from the floor to 80 inches (2030 mm) above the floor. Recessed ashtrays should not be placed near elevator call buttons so that persons who are blind or visually impaired do not inadvertently contact them or their contents as they reach for the call buttons.

407.2.1.4 Location. The call button that designates the up direction shall be located above the call button that designates the down direction.

EXCEPTION: Destination-oriented elevators shall not be required to comply with 407.2.1.4.

Advisory 407.2.1.4 Location Exception. A destination-oriented elevator system provides lobby controls enabling passengers to select floor stops, lobby indicators designating which elevator to use, and a car indicator designating the floors at which the car will stop. Responding cars are programmed for maximum efficiency by reducing the number of stops any passenger experiences.

407.2.1.5 Signals. Call buttons shall have visible signals to indicate when each call is registered and when each call is answered.

EXCEPTIONS: 1. Destination-oriented elevators shall not be required to comply with 407.2.1.5 provided that visible and audible signals complying with 407.2.2 indicating which elevator car to enter are provided.

2. Existing elevators shall not be required to comply with 407.2.1.5.

407.2.1.6 Keypads. Where keypads are provided, keypads shall be in a standard telephone keypad arrangement and shall comply with 407.4.7.2.

407.2.2 Hall Signals. Hall signals, including in-car signals, shall comply with 407.2.2.

407.2.2.1 Visible and Audible Signals. A visible and audible signal shall be provided at each hoistway entrance to indicate which car is answering a call and the car's direction of travel. Where in-car signals are provided, they shall be visible from the floor area adjacent to the hall call buttons.

EXCEPTIONS: 1. Visible and audible signals shall not be required at each destination-oriented elevator where a visible and audible signal complying with 407.2.2 is provided indicating the elevator car designation information.

2. In existing elevators, a signal indicating the direction of car travel shall not be required.

407.2.2.2 Visible Signals. Visible signal fixtures shall be centered at 72 inches (1830 mm) minimum above the finish floor or ground. The visible signal *elements* shall be 2-½ inches (64 mm) minimum measured along the vertical centerline of the *element.* Signals shall be visible from the floor area adjacent to the hall call button.

EXCEPTIONS: 1. Destination-oriented elevators shall be permitted to have signals visible from the floor area adjacent to the hoistway entrance.

2. Existing elevators shall not be required to comply with 407.2.2.2.

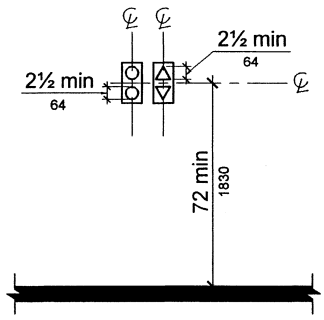

Figure 407.2.2.2
Visible Hall Signals

407.2.2.3 Audible Signals. Audible signals shall sound once for the up direction and twice for the down direction, or shall have verbal annunciators that indicate the direction of elevator car travel. Audible signals shall have a frequency of 1500 Hz maximum. Verbal annunciators shall have a frequency of 300 Hz minimum and 3000 Hz maximum. The audible signal and verbal annunciator shall be 10 dB minimum above ambient, but shall not exceed 80 dB, measured at the hall call button.

EXCEPTIONS: 1. Destination-oriented elevators shall not be required to comply with 407.2.2.3 provided that the audible tone and verbal announcement is the same as those given at the call button or call button keypad.

2. Existing elevators shall not be required to comply with the requirements for frequency and dB range of audible signals.

407.2.2.4 Differentiation. Each destination-oriented elevator in a bank of elevators shall have audible and visible means for differentiation.

407.2.3 Hoistway Signs. Signs at elevator hoistways shall comply with 407.2.3.

407.2.3.1 Floor Designation. Floor designations complying with 703.2 and 703.4.1 shall be provided on both jambs of elevator hoistway entrances. Floor designations shall be provided in both *tactile characters* and braille. *Tactile characters* shall be 2 inches (51 mm) high minimum. A *tactile* star shall be provided on both jambs at the main entry level.

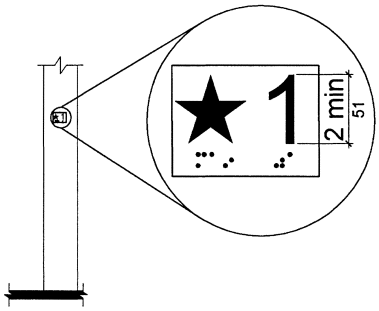

Figure 407.2.3.1
Floor Designations on Jambs of Elevator Hoistway Entrances

407.2.3.2 Car Designations. Destination-oriented elevators shall provide *tactile* car identification complying with 703.2 on both jambs of the hoistway immediately below the floor designation. Car designations shall be provided in both *tactile characters* and braille. *Tactile characters* shall be 2 inches (51 mm) high minimum.

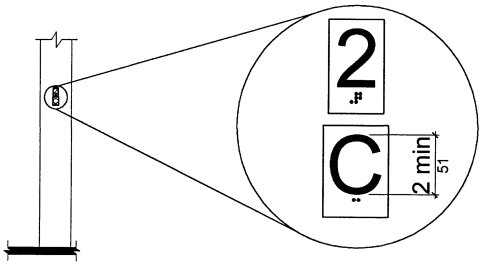

Figure 407.2.3.2
Car Designations on Jambs of Destination-Oriented Elevator Hoistway Entrances

407.3 Elevator Door Requirements. Hoistway and car doors shall comply with 407.3.

407.3.1 Type. Elevator doors shall be the horizontal sliding type. Car gates shall be prohibited.

407.3.2 Operation. Elevator hoistway and car doors shall open and close automatically.
EXCEPTION: Existing manually operated hoistway swing doors shall be permitted provided that they comply with 404.2.3 and 404.2.9. Car door closing shall not be initiated until the hoistway door is closed.

407.3.3 Reopening Device. Elevator doors shall be provided with a reopening device complying with 407.3.3 that shall stop and reopen a car door and hoistway door automatically if the door becomes obstructed by an object or person.
EXCEPTION: Existing elevators with manually operated doors shall not be required to comply with 407.3.3.

407.3.3.1 Height. The device shall be activated by sensing an obstruction passing through the opening at 5 inches (125 mm) nominal and 29 inches (735 mm) nominal above the finish floor.

407.3.3.2 Contact. The device shall not require physical contact to be activated, although contact is permitted to occur before the door reverses.

407.3.3.3 Duration. Door reopening devices shall remain effective for 20 seconds minimum.

407.3.4 Door and Signal Timing. The minimum acceptable time from notification that a car is answering a call or notification of the car assigned at the means for the entry of destination information until the doors of that car start to close shall be calculated from the following equation:

T = D/(1.5 ft/s) or T = D/(455 mm/s) = 5 seconds minimum where T equals the total time in seconds and D equals the distance (in feet or millimeters) from the point in the lobby or corridor 60 inches (1525 mm) directly in front of the farthest call button controlling that car to the centerline of its hoistway door.
EXCEPTIONS: 1. For cars with in-car lanterns, T shall be permitted to begin when the signal is visible from the point 60 inches (1525 mm) directly in front of the farthest hall call button and the audible signal is sounded.
2. Destination-oriented elevators shall not be required to comply with 407.3.4.

407.3.5 Door Delay. Elevator doors shall remain fully open in response to a car call for 3 seconds minimum.

407.3.6 Width. The width of elevator doors shall comply with Table 407.4.1.
EXCEPTION: In existing elevators, a power-operated car door complying with 404.2.3 shall be permitted.

407.4 Elevator Car Requirements. Elevator cars shall comply with 407.4.

407.4.1 Car Dimensions. Inside dimensions of elevator cars and clear width of elevator doors shall comply with Table 407.4.1.

EXCEPTION: Existing elevator car configurations that provide a clear floor area of 16 square feet (1.5 m^2) minimum and also provide an inside clear depth 54 inches (1370 mm) minimum and a clear width 36 inches (915 mm) minimum shall be permitted.

Table 407.4.1 Elevator Car Dimensions

	Minimum Dimensions			
Door Location	**Door Clear Width**	**Inside Car, Side to Side**	**Inside Car, Back Wall to Front Return**	**Inside Car, Back Wall to Inside Face of Door**
Centered	42 inches (1065 mm)	80 inches (2030 mm)	51 inches (1295 mm)	54 inches (1370 mm)
Side (off-centered)	36 inches (915 mm)[1]	68 inches (1725 mm)	51 inches (1295 mm)	54 inches (1370 mm)
Any	36 inches (915 mm)[1]	54 inches (1370 mm)	80 inches (2030 mm)	80 inches (2030 mm)
Any	36 inches (915 mm)[1]	60 inches (1525 mm)[2]	60 inches (1525 mm)[2]	60 inches (1525 mm)[2]

1. A tolerance of minus 5/8 inch (16 mm) is permitted.
2. Other car configurations that provide a turning *space* complying with 304 with the door closed shall be permited.

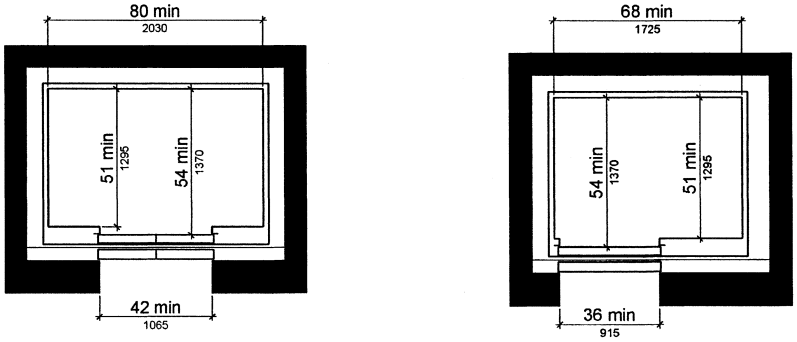

(a) centered door

(b) side (off-centered) door

Figure 407.4.1
Elevator Car Dimensions

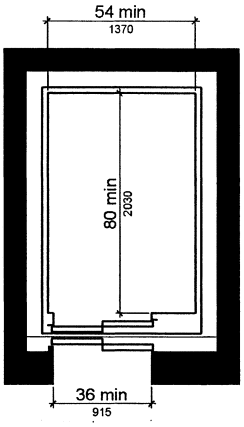

(c)
any door location

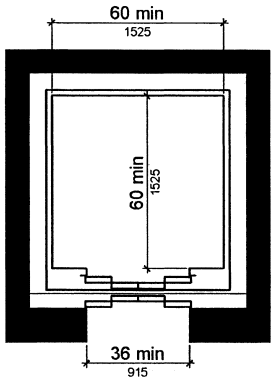

(d)
any door location

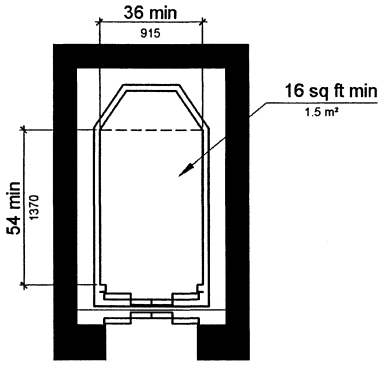

(e)
Exception
existing elevator car configuration

Figure 407.4.1
Elevator Car Dimensions

407.4.2 Floor Surfaces. Floor surfaces in elevator cars shall comply with 302 and 303.

407.4.3 Platform to Hoistway Clearance. The clearance between the car platform sill and the edge of any hoistway landing shall be 1¼ inch (32 mm) maximum.

407.4.4 Leveling. Each car shall be equipped with a self-leveling feature that will automatically bring and maintain the car at floor landings within a tolerance of ½ inch (13 mm) under rated loading to zero loading conditions.

407.4.5 Illumination. The level of illumination at the car controls, platform, car threshold and car landing sill shall be 5 foot candles (54 lux) minimum.

407.4.6 Elevator Car Controls. Where provided, elevator car controls shall comply with 407.4.6 and 309.4.

EXCEPTION: In existing elevators, where a new car operating panel complying with 407.4.6 is provided, existing car operating panels shall not be required to comply with 407.4.6.

407.4.6.1 Location. Controls shall be located within one of the reach ranges specified in 308.

EXCEPTIONS: 1. Where the elevator panel serves more than 16 openings and a parallel approach is provided, buttons with floor designations shall be permitted to be 54 inches (1370 mm) maximum above the finish floor.

2. In existing elevators, car control buttons with floor designations shall be permitted to be located 54 inches (1370 mm) maximum above the finish floor where a parallel approach is provided.

407.4.6.2 Buttons. Car control buttons with floor designations shall comply with 407.4.6.2 and shall be raised or flush.

EXCEPTION: In existing elevators, buttons shall be permitted to be recessed.

407.4.6.2.1 Size. Buttons shall be 3/4 inch (19 mm) minimum in their smallest dimension.

407.4.6.2.2 Arrangement. Buttons shall be arranged with numbers in ascending order. When two or more columns of buttons are provided they shall read from left to right.

407.4.6.3 Keypads. Car control keypads shall be in a standard telephone keypad arrangement and shall comply with 407.4.7.2.

407.4.6.4 Emergency Controls. Emergency controls shall comply with 407.4.6.4.

407.4.6.4.1 Height. Emergency control buttons shall have their centerlines 35 inches (890 mm) minimum above the finish floor.

407.4.6.4.2 Location. Emergency controls, including the emergency alarm, shall be grouped at the bottom of the panel.

407.4.7 Designations and Indicators of Car Controls. Designations and indicators of car controls shall comply with 407.4.7.

EXCEPTION: In existing elevators, where a new car operating panel complying with 407.4.7 is provided, existing car operating panels shall not be required to comply with 407.4.7.

407.4.7.1 Buttons. Car control buttons shall comply with 407.4.7.1.

407.4.7.1.1 Type. Control buttons shall be identified by *tactile characters* complying with 703.2.

407.4.7.1.2 Location. Raised *character* and braille designations shall be placed immediately to the left of the control button to which the designations apply.

EXCEPTION: Where *space* on an existing car operating panel precludes *tactile* markings to the left of the controls, markings shall be placed as near to the control as possible.

407.4.7.1.3 Symbols. The control button for the emergency stop, alarm, door open, door close, main entry floor, and phone, shall be identified with *tactile* symbols as shown in Table 407.4.7.1.3.

Table 407.4.7.1.3 Elevator Control Button Identification

Control Button	Tactile Symbol	Braille Message
Emergency Stop		⠌⠕⠏ "ST"OP Three cells
Alarm		⠁⠇⠌⠍ AL"AR"M Four cells
Door Open		⠕⠏⠢ OP"EN" Three cells
Door Close		⠉⠇⠕⠎⠑ CLOSE Five cells
Main Entry Floor		⠍⠁⠔ MA"IN" Three cells
Phone		⠏⠓⠕⠝ PH"ONE" Four cells

407.4.7.1.4 Visible Indicators. Buttons with floor designations shall be provided with visible indicators to show that a call has been registered. The visible indication shall extinguish when the car arrives at the designated floor.

407.4.7.2 Keypads. Keypads shall be identified by *characters* complying with 703.5 and shall be centered on the corresponding keypad button. The number five key shall have a single raised dot. The dot shall be 0.118 inch (3 mm) to 0.120 inch (3.05 mm) base diameter and in other aspects comply with Table 703.3.1.

407.4.8 Car Position Indicators. Audible and visible car position indicators shall be provided in elevator cars.

407.4.8.1 Visible Indicators. Visible indicators shall comply with 407.4.8.1.

407.4.8.1.1 Size. *Characters* shall be ½ inch (13 mm) high minimum.

407.4.8.1.2 Location. Indicators shall be located above the car control panel or above the door.

407.4.8.1.3 Floor Arrival. As the car passes a floor and when a car stops at a floor served by the elevator, the corresponding *character* shall illuminate.

EXCEPTION: Destination-oriented elevators shall not be required to comply with 407.4.8.1.3 provided that the visible indicators extinguish when the call has been answered.

407.4.8.1.4 Destination Indicator. In destination-oriented elevators, a display shall be provided in the car with visible indicators to show car destinations.

407.4.8.2 Audible Indicators. Audible indicators shall comply with 407.4.8.2.

407.4.8.2.1 Signal Type. The signal shall be an automatic verbal annunciator which announces the floor at which the car is about to stop.

EXCEPTION: For elevators other than destination-oriented elevators that have a rated speed of 200 feet per minute (1 m/s) or less, a non-verbal audible signal with a frequency of 1500 Hz maximum which sounds as the car passes or is about to stop at a floor served by the elevator shall be permitted.

407.4.8.2.2 Signal Level. The verbal annunciator shall be 10 dB minimum above ambient, but shall not exceed 80 dB, measured at the annunciator.

407.4.8.2.3 Frequency. The verbal annunciator shall have a frequency of 300 Hz minimum to 3000 Hz maximum.

407.4.9 Emergency Communication. Emergency two-way communication systems shall comply with 308. *Tactile* symbols and *characters* shall be provided adjacent to the device and shall comply with 703.2.

408 Limited-Use/Limited-Application Elevators

408.1 General. Limited-use/limited-application elevators shall comply with 408 and with ASME A17.1 (incorporated by reference, see "Referenced Standards" in Chapter 1). They shall be passenger elevators as classified by ASME A17.1. Elevator operation shall be automatic.

408.2 Elevator Landings. Landings serving limited-use/limited-application elevators shall comply with 408.2.

408.2.1 Call Buttons. Elevator call buttons and keypads shall comply with 407.2.1.

408.2.2 Hall Signals. Hall signals shall comply with 407.2.2.

408.2.3 Hoistway Signs. Signs at elevator hoistways shall comply with 407.2.3.1.

408.3 Elevator Doors. Elevator hoistway doors shall comply with 408.3.

408.3.1 Sliding Doors. Sliding hoistway and car doors shall comply with 407.3.1 through 407.3.3 and 408.4.1.

408.3.2 Swinging Doors. Swinging hoistway doors shall open and close automatically and shall comply with 404, 407.3.2 and 408.3.2.

408.3.2.1 Power Operation. Swinging doors shall be power-operated and shall comply with ANSI/BHMA A156.19 (1997 or 2002 edition) (incorporated by reference, see "Referenced Standards" in Chapter 1).

408.3.2.2 Duration. Power-operated swinging doors shall remain open for 20 seconds minimum when activated.

408.4 Elevator Cars. Elevator cars shall comply with 408.4.

408.4.1 Car Dimensions and Doors. Elevator cars shall provide a clear width 42 inches (1065 mm) minimum and a clear depth 54 inches (1370 mm) minimum. Car doors shall be positioned at the narrow ends of cars and shall provide 32 inches (815 mm) minimum clear width.

EXCEPTIONS: 1. Cars that provide a clear width 51 inches (1295 mm) minimum shall be permitted to provide a clear depth 51 inches (1295 mm) minimum provided that car doors provide a clear opening 36 inches (915 mm) wide minimum.

2. Existing elevator cars shall be permitted to provide a clear width 36 inches (915 mm) minimum, clear depth 54 inches (1370 mm) minimum, and a net clear platform area 15 square feet (1.4 m^2) minimum.

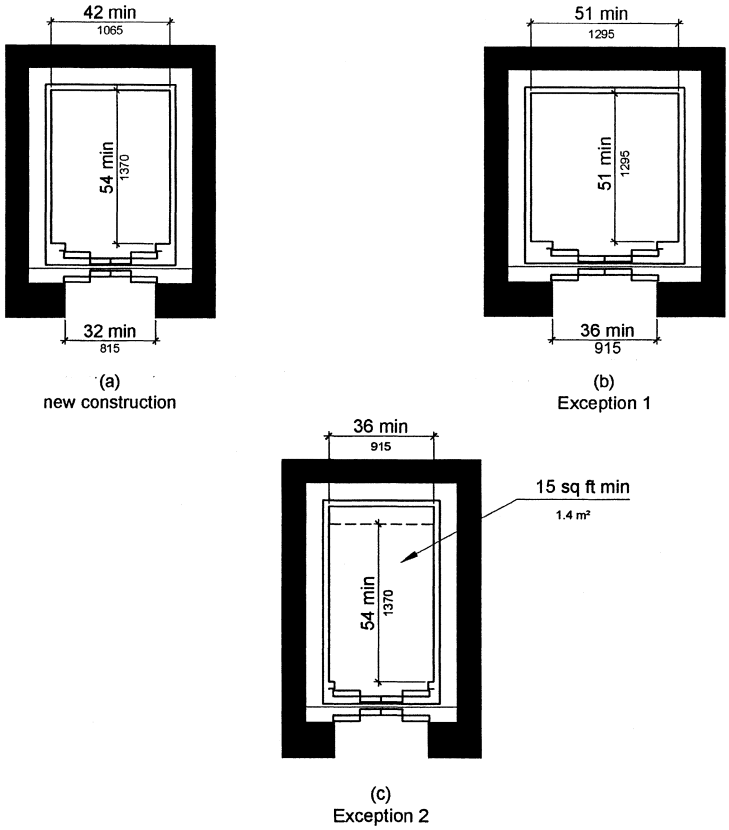

Figure 408.4.1
Limited-Use/Limited-Application (LULA) Elevator Car Dimensions

408.4.2 Floor Surfaces. Floor surfaces in elevator cars shall comply with 302 and 303.

408.4.3 Platform to Hoistway Clearance. The platform to hoistway clearance shall comply with 407.4.3.

408.4.4 Leveling. Elevator car leveling shall comply with 407.4.4.

408.4.5 Illumination. Elevator car illumination shall comply with 407.4.5.

408.4.6 Car Controls. Elevator car controls shall comply with 407.4.6. Control panels shall be centered on a side wall.

408.4.7 Designations and Indicators of Car Controls. Designations and indicators of car controls shall comply with 407.4.7.

408.4.8 Emergency Communications. Car emergency signaling devices complying with 407.4.9 shall be provided.

409 Private Residence Elevators

409.1 General. Private residence elevators that are provided within a *residential dwelling unit* required to provide mobility features complying with 809.2 through 809.4 shall comply with 409 and with ASME A17.1 (incorporated by reference, see "Referenced Standards" in Chapter 1). They shall be passenger elevators as classified by ASME A17.1. Elevator operation shall be automatic.

409.2 Call Buttons. Call buttons shall be ¾ inch (19 mm) minimum in the smallest dimension and shall comply with 309.

409.3 Elevator Doors. Hoistway doors, car doors, and car gates shall comply with 409.3 and 404.
EXCEPTION: Doors shall not be required to comply with the maneuvering clearance requirements in 404.2.4.1 for approaches to the push side of swinging doors.

409.3.1 Power Operation. Elevator car and hoistway doors and gates shall be power operated and shall comply with ANSI/BHMA A156.19 (1997 or 2002 edition) (incorporated by reference, see "Referenced Standards" in Chapter 1). Power operated doors and gates shall remain open for 20 seconds minimum when activated.
EXCEPTION: In elevator cars with more than one opening, hoistway doors and gates shall be permitted to be of the manual-open, self-close type.

409.3.2 Location. Elevator car doors or gates shall be positioned at the narrow end of the clear floor *spaces* required by 409.4.1.

409.4 Elevator Cars. Private residence elevator cars shall comply with 409.4.

409.4.1 Inside Dimensions of Elevator Cars. Elevator cars shall provide a clear floor *space* of 36 inches (915 mm) minimum by 48 inches (1220 mm) minimum and shall comply with 305.

409.4.2 Floor Surfaces. Floor surfaces in elevator cars shall comply with 302 and 303.

409.4.3 Platform to Hoistway Clearance. The clearance between the car platform and the edge of any landing sill shall be 1½ inch (38 mm) maximum.

409.4.4 Leveling. Each car shall automatically stop at a floor landing within a tolerance of ½ inch (13 mm) under rated loading to zero loading conditions.

409.4.5 Illumination Levels. Elevator car illumination shall comply with 407.4.5.

409.4.6 Car Controls. Elevator car control buttons shall comply with 409.4.6, 309.3, 309.4, and shall be raised or flush.

409.4.6.1 Size. Control buttons shall be 3/4 inch (19 mm) minimum in their smallest dimension.

409.4.6.2 Location. Control panels shall be on a side wall, 12 inches (305 mm) minimum from any adjacent wall.

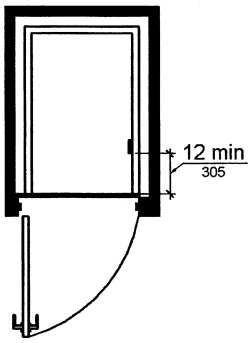

Figure 409.4.6.2
Location of Private Residence Elevator Control Panel

409.4.7 Emergency Communications. Emergency two-way communication systems shall comply with 409.4.7.

409.4.7.1 Type. A telephone and emergency signal device shall be provided in the car.

409.4.7.2 Operable Parts. The telephone and emergency signaling device shall comply with 309.3 and 309.4.

409.4.7.3 Compartment. If the telephone or device is in a closed compartment, the compartment door hardware shall comply with 309.

409.4.7.4 Cord. The telephone cord shall be 29 inches (735 mm) long minimum.

410 Platform Lifts

410.1 General. Platform lifts shall comply with ASME A18.1 (1999 edition or 2003 edition) (incorporated by reference, see "Referenced Standards" in Chapter 1). Platform lifts shall not be attendant-operated and shall provide unassisted entry and exit from the lift.

> **Advisory 410.1 General.** Inclined stairway chairlifts and inclined and vertical platform lifts are available for short-distance vertical transportation. Because an accessible route requires an 80 inch (2030 mm) vertical clearance, care should be taken in selecting lifts as they may not be equally suitable for use by people using wheelchairs and people standing. If a lift does not provide 80 inch (2030 mm) vertical clearance, it cannot be considered part of an accessible route in new construction.
>
> The ADA and other Federal civil rights laws require that accessible features be maintained in working order so that they are accessible to and usable by those people they are intended to benefit. Building owners are reminded that the ASME A18 Safety Standard for Platform Lifts and Stairway Chairlifts requires routine maintenance and inspections. Isolated or temporary interruptions in service due to maintenance or repairs may be unavoidable; however, failure to take prompt action to effect repairs could constitute a violation of Federal laws and these requirements.

410.2 Floor Surfaces. Floor surfaces in platform lifts shall comply with 302 and 303.

410.3 Clear Floor Space. Clear floor *space* in platform lifts shall comply with 305.

410.4 Platform to Runway Clearance. The clearance between the platform sill and the edge of any runway landing shall be 1¼ inch (32 mm) maximum.

410.5 Operable Parts. Controls for platform lifts shall comply with 309.

410.6 Doors and Gates. Platform lifts shall have low-energy power-operated doors or gates complying with 404.3. Doors shall remain open for 20 seconds minimum. End doors and gates shall provide a clear width 32 inches (815 mm) minimum. Side doors and gates shall provide a clear width 42 inches (1065 mm) minimum.

EXCEPTION: Platform lifts serving two landings maximum and having doors or gates on opposite sides shall be permitted to have self-closing manual doors or gates.

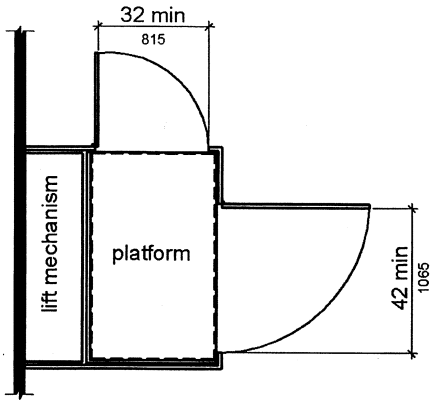

Figure 410.6
Platform Lift Doors and Gates

CHAPTER 5: GENERAL SITE AND BUILDING ELEMENTS

501 General

501.1 Scope. The provisions of Chapter 5 shall apply where required by Chapter 2 or where referenced by a requirement in this document.

502 Parking Spaces

502.1 General. Car and van parking *spaces* shall comply with 502. Where parking *spaces* are marked with lines, width measurements of parking *spaces* and access aisles shall be made from the centerline of the markings.

EXCEPTION: Where parking *spaces* or access aisles are not adjacent to another parking *space* or access aisle, measurements shall be permitted to include the full width of the line defining the parking *space* or access aisle.

502.2 Vehicle Spaces. Car parking *spaces* shall be 96 inches (2440 mm) wide minimum and van parking *spaces* shall be 132 inches (3350 mm) wide minimum, shall be marked to define the width, and shall have an adjacent access aisle complying with 502.3.

EXCEPTION: Van parking *spaces* shall be permitted to be 96 inches (2440 mm) wide minimum where the access aisle is 96 inches (2440 mm) wide minimum.

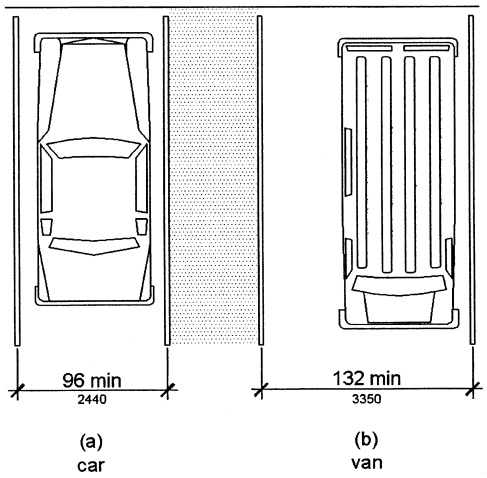

Figure 502.2
Vehicle Parking Spaces

502.3 Access Aisle. Access aisles serving parking *spaces* shall comply with 502.3. Access aisles shall adjoin an *accessible* route. Two parking *spaces* shall be permitted to share a common access aisle.

> **Advisory 502.3 Access Aisle.** Accessible routes must connect parking spaces to accessible entrances. In parking facilities where the accessible route must cross vehicular traffic lanes, marked crossings enhance pedestrian safety, particularly for people using wheelchairs and other mobility aids. Where possible, it is preferable that the accessible route not pass behind parked vehicles.

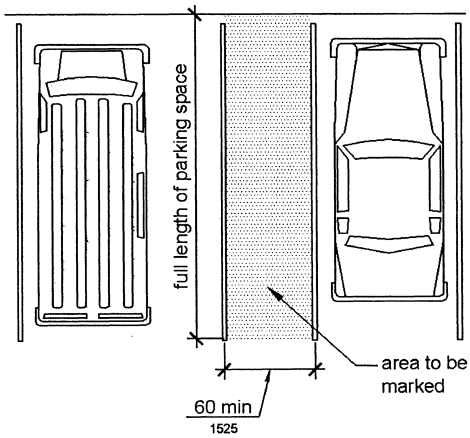

Figure 502.3
Parking Space Access Aisle

502.3.1 Width. Access aisles serving car and van parking *spaces* shall be 60 inches (1525 mm) wide minimum.

502.3.2 Length. Access aisles shall extend the full length of the parking *spaces* they serve.

502.3.3 Marking. Access aisles shall be marked so as to discourage parking in them.

> **Advisory 502.3.3 Marking.** The method and color of marking are not specified by these requirements but may be addressed by State or local laws or regulations. Because these requirements permit the van access aisle to be as wide as a parking space, it is important that the aisle be clearly marked.

502.3.4 Location. Access aisles shall not overlap the *vehicular way.* Access aisles shall be permitted to be placed on either side of the parking *space* except for angled van parking *spaces* which shall have access aisles located on the passenger side of the parking *spaces.*

> **Advisory 502.3.4 Location.** Wheelchair lifts typically are installed on the passenger side of vans. Many drivers, especially those who operate vans, find it more difficult to back into parking spaces than to back out into comparatively unrestricted vehicular lanes. For this reason, where a van and car share an access aisle, consider locating the van space so that the access aisle is on the passenger side of the van space.

502.4 Floor or Ground Surfaces. Parking *spaces* and access aisles serving them shall comply with 302. Access aisles shall be at the same level as the parking *spaces* they serve. Changes in level are not permitted.

EXCEPTION: Slopes not steeper than 1:48 shall be permitted.

> **Advisory 502.4 Floor or Ground Surfaces.** Access aisles are required to be nearly level in all directions to provide a surface for wheelchair transfer to and from vehicles. The exception allows sufficient slope for drainage. Built-up curb ramps are not permitted to project into access aisles and parking spaces because they would create slopes greater than 1:48.

502.5 Vertical Clearance. Parking *spaces* for vans and access aisles and vehicular routes serving them shall provide a vertical clearance of 98 inches (2490 mm) minimum.

> **Advisory 502.5 Vertical Clearance.** Signs provided at entrances to parking facilities informing drivers of clearances and the location of van accessible parking spaces can provide useful customer assistance.

502.6 Identification. Parking *space* identification signs shall include the International Symbol of *Accessibility* complying with 703.7.2.1. Signs identifying van parking *spaces* shall contain the designation "van accessible." Signs shall be 60 inches (1525 mm) minimum above the finish floor or ground surface measured to the bottom of the sign.

> **Advisory 502.6 Identification.** The required "van accessible" designation is intended to be informative, not restrictive, in identifying those spaces that are better suited for van use. Enforcement of motor vehicle laws, including parking privileges, is a local matter.

502.7 Relationship to Accessible Routes. Parking *spaces* and access aisles shall be designed so that cars and vans, when parked, cannot obstruct the required clear width of adjacent *accessible* routes.

> **Advisory 502.7 Relationship to Accessible Routes.** Wheel stops are an effective way to prevent vehicle overhangs from reducing the clear width of accessible routes.

503 Passenger Loading Zones

503.1 General. Passenger loading zones shall comply with 503.

503.2 Vehicle Pull-Up Space. Passenger loading zones shall provide a vehicular pull-up *space* 96 inches (2440 mm) wide minimum and 20 feet (6100 mm) long minimum.

503.3 Access Aisle. Passenger loading zones shall provide access aisles complying with 503 adjacent to the vehicle pull-up space. Access aisles shall adjoin an *accessible* route and shall not overlap the *vehicular way.*

503.3.1 Width. Access aisles serving vehicle pull-up *spaces* shall be 60 inches (1525 mm) wide minimum.

503.3.2 Length. Access aisles shall extend the full length of the vehicle pull-up *spaces* they serve.

503.3.3 Marking. Access aisles shall be marked so as to discourage parking in them.

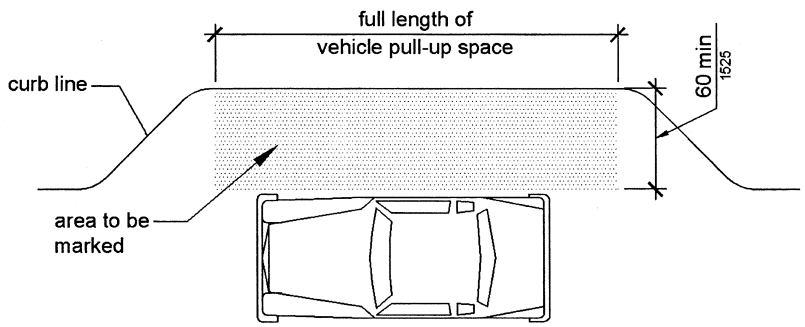

Figure 503.3
Passenger Loading Zone Access Aisle

503.4 Floor and Ground Surfaces. Vehicle pull-up *spaces* and access aisles serving them shall comply with 302. Access aisles shall be at the same level as the vehicle pull-up *space* they serve. Changes in level are not permitted.

EXCEPTION: Slopes not steeper than 1:48 shall be permitted.

503.5 Vertical Clearance. Vehicle pull-up *spaces*, access aisles serving them, and a vehicular route from an *entrance* to the passenger loading zone, and from the passenger loading zone to a vehicular exit shall provide a vertical clearance of 114 inches (2895 mm) minimum.

504 Stairways

504.1 General. Stairs shall comply with 504.

504.2 Treads and Risers. All steps on a flight of stairs shall have uniform riser heights and uniform tread depths. Risers shall be 4 inches (100 mm) high minimum and 7 inches (180 mm) high maximum. Treads shall be 11 inches (280 mm) deep minimum.

504.3 Open Risers. Open risers are not permitted.

504.4 Tread Surface. Stair treads shall comply with 302. Changes in level are not permitted.
EXCEPTION: Treads shall be permitted to have a slope not steeper than 1:48.

> **Advisory 504.4 Tread Surface.** Consider providing visual contrast on tread nosings, or at the leading edges of treads without nosings, so that stair treads are more visible for people with low vision.

504.5 Nosings. The radius of curvature at the leading edge of the tread shall be ½ inch (13 mm) maximum. Nosings that project beyond risers shall have the underside of the leading edge curved or beveled. Risers shall be permitted to slope under the tread at an angle of 30 degrees maximum from vertical. The permitted projection of the nosing shall extend 1½ inches (38 mm) maximum over the tread below.

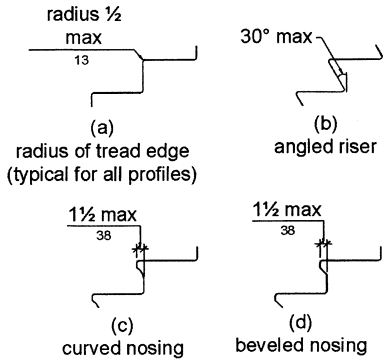

Figure 504.5
Stair Nosings

504.6 Handrails. Stairs shall have handrails complying with 505.

504.7 Wet Conditions. Stair treads and landings subject to wet conditions shall be designed to prevent the accumulation of water.

505 Handrails

505.1 General. Handrails provided along walking surfaces complying with 403, required at *ramps* complying with 405, and required at stairs complying with 504 shall comply with 505.

> **Advisory 505.1 General.** Handrails are required on ramp runs with a rise greater than 6 inches (150 mm) (see 405.8) and on certain stairways (see 504). Handrails are not required on walking surfaces with running slopes less than 1:20. However, handrails are required to comply with 505 when they are provided on walking surfaces with running slopes less than 1:20 (see 403.6). Sections 505.2, 505.3, and 505.10 do not apply to handrails provided on walking surfaces with running slopes less than 1:20 as these sections only reference requirements for ramps and stairs.

505.2 Where Required. Handrails shall be provided on both sides of stairs and *ramps*.

EXCEPTION: In *assembly areas*, handrails shall not be required on both sides of aisle *ramps* where a handrail is provided at either side or within the aisle width.

505.3 Continuity. Handrails shall be continuous within the full length of each stair flight or *ramp* run. Inside handrails on switchback or dogleg stairs and *ramps* shall be continuous between flights or runs.

EXCEPTION: In *assembly areas*, handrails on *ramps* shall not be required to be continuous in aisles serving seating.

505.4 Height. Top of gripping surfaces of handrails shall be 34 inches (865 mm) minimum and 38 inches (965 mm) maximum vertically above walking surfaces, stair nosings, and *ramp* surfaces. Handrails shall be at a consistent height above walking surfaces, stair nosings, and *ramp* surfaces.

> **Advisory 505.4 Height.** The requirements for stair and ramp handrails in this document are for adults. When children are the principal users in a building or facility (e.g., elementary schools), a second set of handrails at an appropriate height can assist them and aid in preventing accidents. A maximum height of 28 inches (710 mm) measured to the top of the gripping surface from the ramp surface or stair nosing is recommended for handrails designed for children. Sufficient vertical clearance between upper and lower handrails, 9 inches (230 mm) minimum, should be provided to help prevent entrapment.

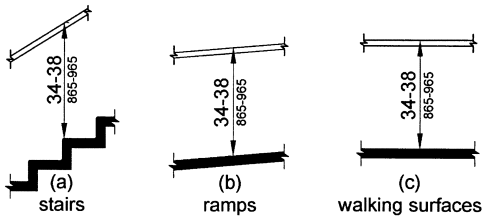

Figure 505.4
Handrail Height

505.5 Clearance. Clearance between handrail gripping surfaces and adjacent surfaces shall be 1½ inches (38 mm) minimum.

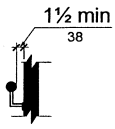

Figure 505.5
Handrail Clearance

505.6 Gripping Surface. Handrail gripping surfaces shall be continuous along their length and shall not be obstructed along their tops or sides. The bottoms of handrail gripping surfaces shall not be obstructed for more than 20 percent of their length. Where provided, horizontal projections shall occur 1½ inches (38 mm) minimum below the bottom of the handrail gripping surface.

EXCEPTIONS: 1. Where handrails are provided along walking surfaces with slopes not steeper than 1:20, the bottoms of handrail gripping surfaces shall be permitted to be obstructed along their entire length where they are integral to crash rails or bumper guards.

2. The distance between horizontal projections and the bottom of the gripping surface shall be permitted to be reduced by 1/8 inch (3.2 mm) for each ½ inch (13 mm) of additional handrail perimeter dimension that exceeds 4 inches (100 mm).

Advisory 505.6 Gripping Surface. People with disabilities, older people, and others benefit from continuous gripping surfaces that permit users to reach the fingers outward or downward to grasp the handrail, particularly as the user senses a loss of equilibrium or begins to fall.

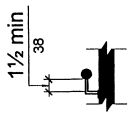

Figure 505.6
Horizontal Projections Below Gripping Surface

505.7 Cross Section. Handrail gripping surfaces shall have a cross section complying with 505.7.1 or 505.7.2.

505.7.1 Circular Cross Section. Handrail gripping surfaces with a circular cross section shall have an outside diameter of 1¼ inches (32 mm) minimum and 2 inches (51 mm) maximum.

505.7.2 Non-Circular Cross Sections. Handrail gripping surfaces with a non-circular cross section shall have a perimeter dimension of 4 inches (100 mm) minimum and 6¼ inches (160 mm) maximum, and a cross-section dimension of 2¼ inches (57 mm) maximum.

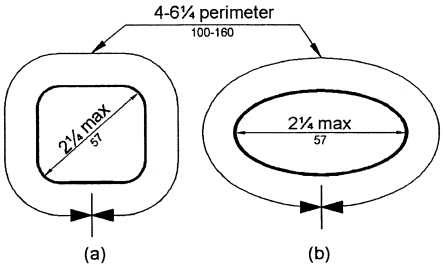

Figure 505.7.2
Handrail Non-Circular Cross Section

505.8 Surfaces. Handrail gripping surfaces and any surfaces adjacent to them shall be free of sharp or abrasive *elements* and shall have rounded edges.

505.9 Fittings. Handrails shall not rotate within their fittings.

505.10 Handrail Extensions. Handrail gripping surfaces shall extend beyond and in the same direction of stair flights and *ramp* runs in accordance with 505.10.

EXCEPTIONS: 1. Extensions shall not be required for continuous handrails at the inside turn of switchback or dogleg stairs and *ramps*.

2. In *assembly areas*, extensions shall not be required for *ramp* handrails in aisles serving seating where the handrails are discontinuous to provide access to seating and to permit crossovers within aisles.

3. In *alterations*, full extensions of handrails shall not be required where such extensions would be hazardous due to plan configuration.

505.10.1 Top and Bottom Extension at Ramps. *Ramp* handrails shall extend horizontally above the landing for 12 inches (305 mm) minimum beyond the top and bottom of *ramp* runs. Extensions shall return to a wall, guard, or the landing surface, or shall be continuous to the handrail of an adjacent *ramp* run.

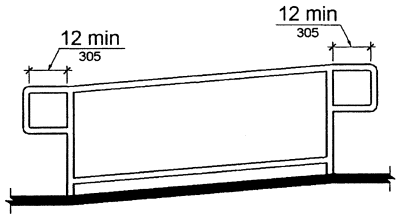

Figure 505.10.1
Top and Bottom Handrail Extension at Ramps

505.10.2 Top Extension at Stairs. At the top of a stair flight, handrails shall extend horizontally above the landing for 12 inches (305 mm) minimum beginning directly above the first riser nosing. Extensions shall return to a wall, guard, or the landing surface, or shall be continuous to the handrail of an adjacent stair flight.

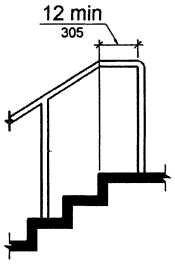

Figure 505.10.2
Top Handrail Extension at Stairs

505.10.3 Bottom Extension at Stairs. At the bottom of a stair flight, handrails shall extend at the slope of the stair flight for a horizontal distance at least equal to one tread depth beyond the last riser nosing. Extension shall return to a wall, guard, or the landing surface, or shall be continuous to the handrail of an adjacent stair flight.

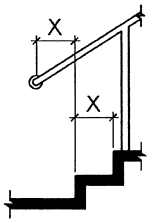

Note: X = tread depth

Figure 505.10.3
Bottom Handrail Extension at Stairs

CHAPTER 6: PLUMBING ELEMENTS AND FACILITIES

601 General

601.1 Scope. The provisions of Chapter 6 shall apply where required by Chapter 2 or where referenced by a requirement in this document.

602 Drinking Fountains

602.1 General. Drinking fountains shall comply with 307 and 602.

602.2 Clear Floor Space. Units shall have a clear floor or ground *space* complying with 305 positioned for a forward approach and centered on the unit. Knee and toe clearance complying with 306 shall be provided.

EXCEPTION: A parallel approach complying with 305 shall be permitted at units for *children's use* where the spout is 30 inches (760 mm) maximum above the finish floor or ground and is 3½ inches (90 mm) maximum from the front edge of the unit, including bumpers.

602.3 Operable Parts. *Operable parts* shall comply with 309.

602.4 Spout Height. Spout outlets shall be 36 inches (915 mm) maximum above the finish floor or ground.

602.5 Spout Location. The spout shall be located 15 inches (380 mm) minimum from the vertical support and 5 inches (125 mm) maximum from the front edge of the unit, including bumpers.

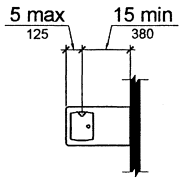

Figure 602.5
Drinking Fountain Spout Location

602.6 Water Flow. The spout shall provide a flow of water 4 inches (100 mm) high minimum and shall be located 5 inches (125 mm) maximum from the front of the unit. The angle of the water stream shall be measured horizontally relative to the front face of the unit. Where spouts are located less than 3 inches (75 mm) of the front of the unit, the angle of the water stream shall be 30 degrees maximum. Where spouts are located between 3 inches (75 mm) and 5 inches (125 mm) maximum from the front of the unit, the angle of the water stream shall be 15 degrees maximum.

Advisory 602.6 Water Flow. The purpose of requiring the drinking fountain spout to produce a flow of water 4 inches (100 mm) high minimum is so that a cup can be inserted under the flow of water to provide a drink of water for an individual who, because of a disability, would otherwise be incapable of using the drinking fountain.

602.7 Drinking Fountains for Standing Persons. Spout outlets of drinking fountains for standing persons shall be 38 inches (965 mm) minimum and 43 inches (1090 mm) maximum above the finish floor or ground.

603 Toilet and Bathing Rooms

603.1 General. Toilet and bathing rooms shall comply with 603.

603.2 Clearances. Clearances shall comply with 603.2.

603.2.1 Turning Space. Turning *space* complying with 304 shall be provided within the room.

603.2.2 Overlap. Required clear floor *spaces*, clearance at fixtures, and turning *space* shall be permitted to overlap.

603.2.3 Door Swing. Doors shall not swing into the clear floor *space* or clearance required for any fixture. Doors shall be permitted to swing into the required turning *space*.

EXCEPTIONS: 1. Doors to a toilet room or bathing room for a single occupant accessed only through a private office and not for *common use* or *public use* shall be permitted to swing into the clear floor *space* or clearance provided the swing of the door can be reversed to comply with 603.2.3.

2. Where the toilet room or bathing room is for individual use and a clear floor *space* complying with 305.3 is provided within the room beyond the arc of the door swing, doors shall be permitted to swing into the clear floor *space* or clearance required for any fixture.

Advisory 603.2.3 Door Swing Exception 1. At the time the door is installed, and if the door swing is reversed in the future, the door must meet all the requirements specified in 404. Additionally, the door swing cannot reduce the required width of an accessible route. Also, avoid violating other building or life safety codes when the door swing is reversed.

603.3 Mirrors. Mirrors located above lavatories or countertops shall be installed with the bottom edge of the reflecting surface 40 inches (1015 mm) maximum above the finish floor or ground. Mirrors not located above lavatories or countertops shall be installed with the bottom edge of the reflecting surface 35 inches (890 mm) maximum above the finish floor or ground.

Advisory 603.3 Mirrors. A single full-length mirror can accommodate a greater number of people, including children. In order for mirrors to be usable by people who are ambulatory and people who use wheelchairs, the top edge of mirrors should be 74 inches (1880 mm) minimum from the floor or ground.

603.4 Coat Hooks and Shelves. Coat hooks shall be located within one of the reach ranges specified in 308. Shelves shall be located 40 inches (1015 mm) minimum and 48 inches (1220 mm) maximum above the finish floor.

604 Water Closets and Toilet Compartments

604.1 General. Water closets and toilet compartments shall comply with 604.2 through 604.8.
EXCEPTION: Water closets and toilet compartments for *children's use* shall be permitted to comply with 604.9.

604.2 Location. The water closet shall be positioned with a wall or partition to the rear and to one side. The centerline of the water closet shall be 16 inches (405 mm) minimum to 18 inches (455 mm) maximum from the side wall or partition, except that the water closet shall be 17 inches (430 mm) minimum and 19 inches (485 mm) maximum from the side wall or partition in the ambulatory *accessible* toilet compartment specified in 604.8.2. Water closets shall be arranged for a left-hand or right-hand approach.

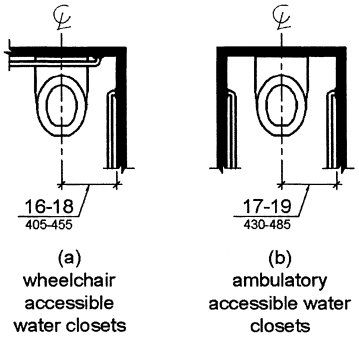

Figure 604.2
Water Closet Location

604.3 Clearance. Clearances around water closets and in toilet compartments shall comply with 604.3.

604.3.1 Size. Clearance around a water closet shall be 60 inches (1525 mm) minimum measured perpendicular from the side wall and 56 inches (1420 mm) minimum measured perpendicular from the rear wall.

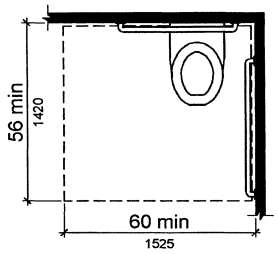

Figure 604.3.1
Size of Clearance at Water Closets

604.3.2 Overlap. The required clearance around the water closet shall be permitted to overlap the water closet, associated grab bars, dispensers, sanitary napkin disposal units, coat hooks, shelves, *accessible* routes, clear floor *space* and clearances required at other fixtures, and the turning *space*. No other fixtures or obstructions shall be located within the required water closet clearance.

EXCEPTION: In *residential dwelling units*, a lavatory complying with 606 shall be permitted on the rear wall 18 inches (455 mm) minimum from the water closet centerline where the clearance at the water closet is 66 inches (1675 mm) minimum measured perpendicular from the rear wall.

Advisory 604.3.2 Overlap. When the door to the toilet room is placed directly in front of the water closet, the water closet cannot overlap the required maneuvering clearance for the door inside the room.

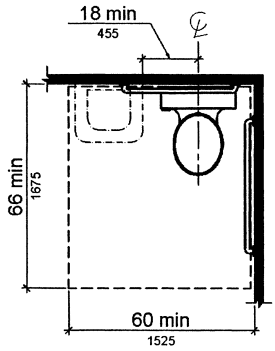

Figure 604.3.2 (Exception)
Overlap of Water Closet Clearance in Residential Dwelling Units

604.4 Seats. The seat height of a water closet above the finish floor shall be 17 inches (430 mm) minimum and 19 inches (485 mm) maximum measured to the top of the seat. Seats shall not be sprung to return to a lifted position.

EXCEPTIONS: 1. A water closet in a toilet room for a single occupant accessed only through a private office and not for *common use* or *public use* shall not be required to comply with 604.4.

2. In *residential dwelling units*, the height of water closets shall be permitted to be 15 inches (380 mm) minimum and 19 inches (485 mm) maximum above the finish floor measured to the top of the seat.

604.5 Grab Bars. Grab bars for water closets shall comply with 609. Grab bars shall be provided on the side wall closest to the water closet and on the rear wall.

EXCEPTIONS: 1. Grab bars shall not be required to be installed in a toilet room for a single occupant accessed only through a private office and not for *common use* or *public use* provided that reinforcement has been installed in walls and located so as to permit the installation of grab bars complying with 604.5.

2. In *residential dwelling units*, grab bars shall not be required to be installed in toilet or bathrooms provided that reinforcement has been installed in walls and located so as to permit the installation of grab bars complying with 604.5.

3. In detention or correction *facilities*, grab bars shall not be required to be installed in housing or holding cells that are specially designed without protrusions for purposes of suicide prevention.

Advisory 604.5 Grab Bars Exception 2. Reinforcement must be sufficient to permit the installation of rear and side wall grab bars that fully meet all accessibility requirements including, but not limited to, required length, installation height, and structural strength.

604.5.1 Side Wall. The side wall grab bar shall be 42 inches (1065 mm) long minimum, located 12 inches (305 mm) maximum from the rear wall and extending 54 inches (1370 mm) minimum from the rear wall.

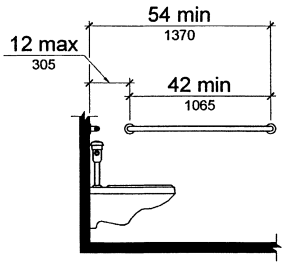

Figure 604.5.1
Side Wall Grab Bar at Water Closets

604.5.2 Rear Wall. The rear wall grab bar shall be 36 inches (915 mm) long minimum and extend from the centerline of the water closet 12 inches (305 mm) minimum on one side and 24 inches (610 mm) minimum on the other side.

EXCEPTIONS: 1. The rear grab bar shall be permitted to be 24 inches (610 mm) long minimum, centered on the water closet, where wall *space* does not permit a length of 36 inches (915 mm) minimum due to the location of a recessed fixture adjacent to the water closet.

2. Where an *administrative authority* requires flush controls for flush valves to be located in a position that conflicts with the location of the rear grab bar, then the rear grab bar shall be permitted to be split or shifted to the open side of the toilet area.

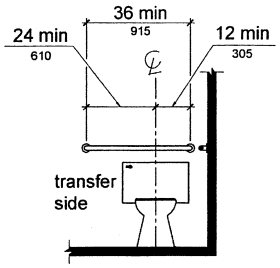

Figure 604.5.2
Rear Wall Grab Bar at Water Closets

604.6 Flush Controls. Flush controls shall be hand operated or automatic. Hand operated flush controls shall comply with 309. Flush controls shall be located on the open side of the water closet except in ambulatory *accessible* compartments complying with 604.8.2.

> **Advisory 604.6 Flush Controls.** If plumbing valves are located directly behind the toilet seat, flush valves and related plumbing can cause injury or imbalance when a person leans back against them. To prevent causing injury or imbalance, the plumbing can be located behind walls or to the side of the toilet; or if approved by the local authority having jurisdiction, provide a toilet seat lid.

604.7 Dispensers. Toilet paper dispensers shall comply with 309.4 and shall be 7 inches (180 mm) minimum and 9 inches (230 mm) maximum in front of the water closet measured to the centerline of the dispenser. The outlet of the dispenser shall be 15 inches (380 mm) minimum and 48 inches (1220 mm) maximum above the finish floor and shall not be located behind grab bars. Dispensers shall not be of a type that controls delivery or that does not allow continuous paper flow.

> **Advisory 604.7 Dispensers.** If toilet paper dispensers are installed above the side wall grab bar, the outlet of the toilet paper dispenser must be 48 inches (1220 mm) maximum above the finish floor and the top of the gripping surface of the grab bar must be 33 inches (840 mm) minimum and 36 inches (915 mm) maximum above the finish floor.

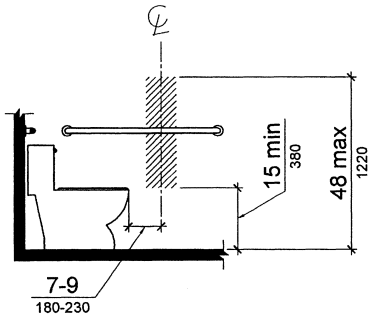

Figure 604.7
Dispenser Outlet Location

604.8 Toilet Compartments. Wheelchair *accessible* toilet compartments shall meet the requirements of 604.8.1 and 604.8.3. Compartments containing more than one plumbing fixture shall comply with 603. Ambulatory *accessible* compartments shall comply with 604.8.2 and 604.8.3.

604.8.1 Wheelchair Accessible Compartments. Wheelchair *accessible* compartments shall comply with 604.8.1.

604.8.1.1 Size. Wheelchair *accessible* compartments shall be 60 inches (1525 mm) wide minimum measured perpendicular to the side wall, and 56 inches (1420 mm) deep minimum for wall hung water closets and 59 inches (1500 mm) deep minimum for floor mounted water closets measured perpendicular to the rear wall. Wheelchair *accessible* compartments for *children's use* shall be 60 inches (1525 mm) wide minimum measured perpendicular to the side wall, and 59 inches (1500 mm) deep minimum for wall hung and floor mounted water closets measured perpendicular to the rear wall.

Advisory 604.8.1.1 Size. The minimum space required in toilet compartments is provided so that a person using a wheelchair can maneuver into position at the water closet. This space cannot be obstructed by baby changing tables or other fixtures or conveniences, except as specified at 604.3.2 (Overlap). If toilet compartments are to be used to house fixtures other than those associated with the water closet, they must be designed to exceed the minimum space requirements. Convenience fixtures such as baby changing tables must also be accessible to people with disabilities as well as to other users. Toilet compartments that are designed to meet, and not exceed, the minimum space requirements may not provide adequate space for maneuvering into position at a baby changing table.

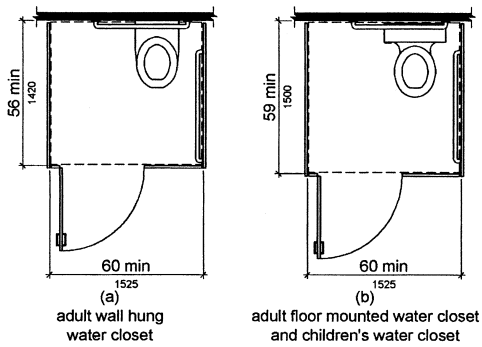

Figure 604.8.1.1
Size of Wheelchair Accessible Toilet Compartment

604.8.1.2 Doors. Toilet compartment doors, including door hardware, shall comply with 404 except that if the approach is to the latch side of the compartment door, clearance between the door side of the compartment and any obstruction shall be 42 inches (1065 mm) minimum. Doors shall be located in the front partition or in the side wall or partition farthest from the water closet. Where located in the front partition, the door opening shall be 4 inches (100 mm) maximum from the side wall or partition farthest from the water closet. Where located in the side wall or partition, the door opening shall be 4 inches (100 mm) maximum from the front partition. The door shall be self-closing. A door pull complying with 404.2.7 shall be placed on both sides of the door near the latch. Toilet compartment doors shall not swing into the minimum required compartment area.

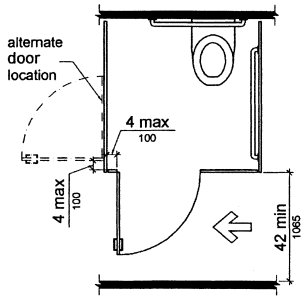

Figure 604.8.1.2
Wheelchair Accessible Toilet Compartment Doors

604.8.1.3 Approach. Compartments shall be arranged for left-hand or right-hand approach to the water closet.

604.8.1.4 Toe Clearance. The front partition and at least one side partition shall provide a toe clearance of 9 inches (230 mm) minimum above the finish floor and 6 inches (150 mm) deep minimum beyond the compartment-side face of the partition, exclusive of partition support members. Compartments for *children's use* shall provide a toe clearance of 12 inches (305 mm) minimum above the finish floor.

EXCEPTION: Toe clearance at the front partition is not required in a compartment greater than 62 inches (1575 mm) deep with a wall-hung water closet or 65 inches (1650 mm) deep with a floor-mounted water closet. Toe clearance at the side partition is not required in a compartment greater than 66 inches (1675 mm) wide. Toe clearance at the front partition is not required in a compartment for *children's use* that is greater than 65 inches (1650 mm) deep.

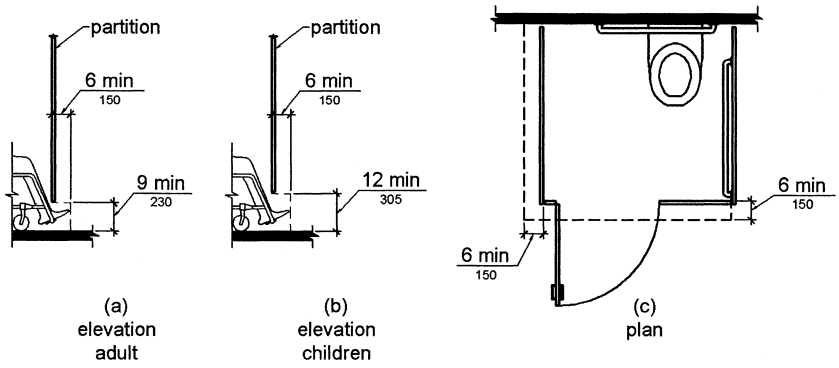

Figure 604.8.1.4
Wheelchair Accessible Toilet Compartment Toe Clearance

604.8.1.5 Grab Bars. Grab bars shall comply with 609. A side-wall grab bar complying with 604.5.1 shall be provided and shall be located on the wall closest to the water closet. In addition, a rear-wall grab bar complying with 604.5.2 shall be provided.

604.8.2 Ambulatory Accessible Compartments. Ambulatory *accessible* compartments shall comply with 604.8.2.

604.8.2.1 Size. Ambulatory *accessible* compartments shall have a depth of 60 inches (1525 mm) minimum and a width of 35 inches (890 mm) minimum and 37 inches (940 mm) maximum.

604.8.2.2 Doors. Toilet compartment doors, including door hardware, shall comply with 404, except that if the approach is to the latch side of the compartment door, clearance between the door side of the compartment and any obstruction shall be 42 inches (1065 mm) minimum. The door shall be self-closing. A door pull complying with 404.2.7 shall be placed on both sides of the door near the latch. Toilet compartment doors shall not swing into the minimum required compartment area.

604.8.2.3 Grab Bars. Grab bars shall comply with 609. A side-wall grab bar complying with 604.5.1 shall be provided on both sides of the compartment.

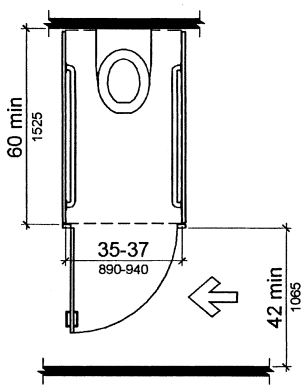

Figure 604.8.2
Ambulatory Accessible Toilet Compartment

604.8.3 Coat Hooks and Shelves. Coat hooks shall be located within one of the reach ranges specified in 308. Shelves shall be located 40 inches (1015 mm) minimum and 48 inches (1220 mm) maximum above the finish floor.

604.9 Water Closets and Toilet Compartments for Children's Use. Water closets and toilet compartments for *children's use* shall comply with 604.9.

Advisory 604.9 Water Closets and Toilet Compartments for Children's Use. The requirements in 604.9 are to be followed where the exception for children's water closets in 604.1 is used. The following table provides additional guidance in applying the specifications for water closets for children according to the age group served and reflects the differences in the size, stature, and reach ranges of children ages 3 through 12. The specifications chosen should correspond to the age of the primary user group. The specifications of one age group should be applied consistently in the installation of a water closet and related elements.

Advisory Specifications for Water Closets Serving Children Ages 3 through 12			
	Ages 3 and 4	**Ages 5 through 8**	**Ages 9 through 12**
Water Closet Centerline	12 inches (305 mm)	12 to 15 inches (305 to 380 mm)	15 to 18 inches (380 to 455 mm)
Toilet Seat Height	11 to 12 inches (280 to 305 mm)	12 to 15 inches (305 to 380 mm)	15 to 17 inches (380 to 430 mm)
Grab Bar Height	18 to 20 inches (455 to 510 mm)	20 to 25 inches (510 to 635 mm)	25 to 27 inches (635 to 685 mm)
Dispenser Height	14 inches (355 mm)	14 to 17 inches (355 to 430 mm)	17 to 19 inches (430 to 485 mm)

604.9.1 Location. The water closet shall be located with a wall or partition to the rear and to one side. The centerline of the water closet shall be 12 inches (305 mm) minimum and 18 inches (455 mm) maximum from the side wall or partition, except that the water closet shall be 17 inches (430 mm) minimum and 19 inches (485 mm) maximum from the side wall or partition in the ambulatory *accessible* toilet compartment specified in 604.8.2. Compartments shall be arranged for left-hand or right-hand approach to the water closet.

604.9.2 Clearance. Clearance around a water closet shall comply with 604.3.

604.9.3 Height. The height of water closets shall be 11 inches (280 mm) minimum and 17 inches (430 mm) maximum measured to the top of the seat. Seats shall not be sprung to return to a lifted position.

604.9.4 Grab Bars. Grab bars for water closets shall comply with 604.5.

604.9.5 Flush Controls. Flush controls shall be hand operated or automatic. Hand operated flush controls shall comply with 309.2 and 309.4 and shall be installed 36 inches (915 mm) maximum above the finish floor. Flush controls shall be located on the open side of the water closet except in ambulatory *accessible* compartments complying with 604.8.2.

604.9.6 Dispensers. Toilet paper dispensers shall comply with 309.4 and shall be 7 inches (180 mm) minimum and 9 inches (230 mm) maximum in front of the water closet measured to the centerline of the dispenser. The outlet of the dispenser shall be 14 inches (355 mm) minimum and 19 inches (485 mm) maximum above the finish floor. There shall be a clearance of 1½ inches (38 mm) minimum below the grab bar. Dispensers shall not be of a type that controls delivery or that does not allow continuous paper flow.

604.9.7 Toilet Compartments. Toilet compartments shall comply with 604.8.

605 Urinals

605.1 General. Urinals shall comply with 605.

> **Advisory 605.1 General.** Stall-type urinals provide greater accessibility for a broader range of persons, including people of short stature.

605.2 Height and Depth. Urinals shall be the stall-type or the wall-hung type with the rim 17 inches (430 mm) maximum above the finish floor or ground. Urinals shall be 13½ inches (345 mm) deep minimum measured from the outer face of the urinal rim to the back of the fixture.

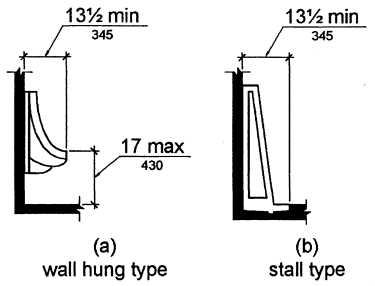

Figure 605.2
Height and Depth of Urinals

605.3 Clear Floor Space. A clear floor or ground *space* complying with 305 positioned for forward approach shall be provided.

605.4 Flush Controls. Flush controls shall be hand operated or automatic. Hand operated flush controls shall comply with 309.

606 Lavatories and Sinks

606.1 General. Lavatories and sinks shall comply with 606.

> **Advisory 606.1 General.** If soap and towel dispensers are provided, they must be located within the reach ranges specified in 308. Locate soap and towel dispensers so that they are conveniently usable by a person at the accessible lavatory.

606.2 Clear Floor Space. A clear floor *space* complying with 305, positioned for a forward approach, and knee and toe clearance complying with 306 shall be provided.

EXCEPTIONS: 1. A parallel approach complying with 305 shall be permitted to a kitchen sink in a *space* where a cook top or conventional range is not provided and to wet bars.

2. A lavatory in a toilet room or bathing *facility* for a single occupant accessed only through a private office and not for *common use* or *public use* shall not be required to provide knee and toe clearance complying with 306.

3. In *residential dwelling units*, cabinetry shall be permitted under lavatories and kitchen sinks provided that all of the following conditions are met:

(a) the cabinetry can be removed without removal or replacement of the fixture;

(b) the finish floor extends under the cabinetry; and

(c) the walls behind and surrounding the cabinetry are finished.

4. A knee clearance of 24 inches (610 mm) minimum above the finish floor or ground shall be permitted at lavatories and sinks used primarily by children 6 through 12 years where the rim or counter surface is 31 inches (785 mm) maximum above the finish floor or ground.

5. A parallel approach complying with 305 shall be permitted to lavatories and sinks used primarily by children 5 years and younger.

6. The dip of the overflow shall not be considered in determining knee and toe clearances.

7. No more than one bowl of a multi-bowl sink shall be required to provide knee and toe clearance complying with 306.

606.3 Height. Lavatories and sinks shall be installed with the front of the higher of the rim or counter surface 34 inches (865 mm) maximum above the finish floor or ground.

EXCEPTIONS: 1. A lavatory in a toilet or bathing *facility* for a single occupant accessed only through a private office and not for *common use* or *public use* shall not be required to comply with 606.3.

2. In *residential dwelling unit* kitchens, sinks that are adjustable to variable heights, 29 inches (735 mm) minimum and 36 inches (915 mm) maximum, shall be permitted where rough-in plumbing permits connections of supply and drain pipes for sinks mounted at the height of 29 inches (735 mm).

606.4 Faucets. Controls for faucets shall comply with 309. Hand-operated metering faucets shall remain open for 10 seconds minimum.

606.5 Exposed Pipes and Surfaces. Water supply and drain pipes under lavatories and sinks shall be insulated or otherwise configured to protect against contact. There shall be no sharp or abrasive surfaces under lavatories and sinks.

607 Bathtubs

607.1 General. Bathtubs shall comply with 607.

607.2 Clearance. Clearance in front of bathtubs shall extend the length of the bathtub and shall be 30 inches (760 mm) wide minimum. A lavatory complying with 606 shall be permitted at the control end of the clearance. Where a permanent seat is provided at the head end of the bathtub, the clearance shall extend 12 inches (305 mm) minimum beyond the wall at the head end of the bathtub.

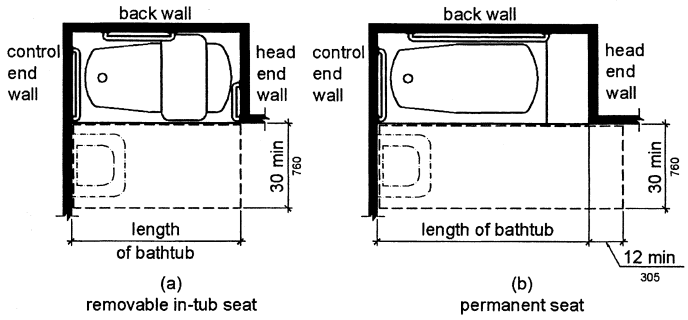

Figure 607.2
Clearance for Bathtubs

607.3 Seat. A permanent seat at the head end of the bathtub or a removable in-tub seat shall be provided. Seats shall comply with 610.

607.4 Grab Bars. Grab bars for bathtubs shall comply with 609 and shall be provided in accordance with 607.4.1 or 607.4.2.

EXCEPTIONS: 1. Grab bars shall not be required to be installed in a bathtub located in a bathing *facility* for a single occupant accessed only through a private office and not for *common use* or *public use* provided that reinforcement has been installed in walls and located so as to permit the installation of grab bars complying with 607.4.

2. In *residential dwelling units*, grab bars shall not be required to be installed in bathtubs located in bathing *facilities* provided that reinforcement has been installed in walls and located so as to permit the installation of grab bars complying with 607.4.

607.4.1 Bathtubs With Permanent Seats. For bathtubs with permanent seats, grab bars shall be provided in accordance with 607.4.1.

607.4.1.1 Back Wall. Two grab bars shall be installed on the back wall, one located in accordance with 609.4 and the other located 8 inches (205 mm) minimum and 10 inches (255 mm) maximum above the rim of the bathtub. Each grab bar shall be installed 15 inches (380 mm) maximum from the head end wall and 12 inches (305 mm) maximum from the control end wall.

607.4.1.2 Control End Wall. A grab bar 24 inches (610 mm) long minimum shall be installed on the control end wall at the front edge of the bathtub.

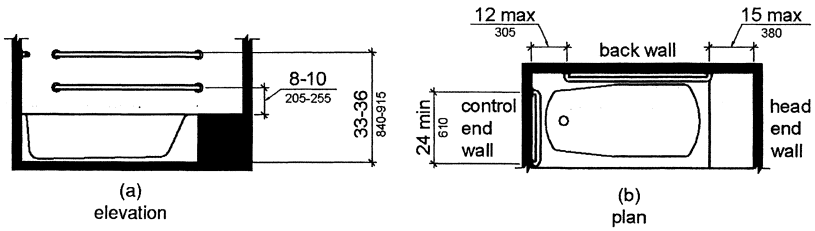

Figure 607.4.1
Grab Bars for Bathtubs with Permanent Seats

607.4.2 Bathtubs Without Permanent Seats. For bathtubs without permanent seats, grab bars shall comply with 607.4.2.

607.4.2.1 Back Wall. Two grab bars shall be installed on the back wall, one located in accordance with 609.4 and other located 8 inches (205 mm) minimum and 10 inches (255 mm) maximum above the rim of the bathtub. Each grab bar shall be 24 inches (610 mm) long minimum and shall be installed 24 inches (610 mm) maximum from the head end wall and 12 inches (305 mm) maximum from the control end wall.

607.4.2.2 Control End Wall. A grab bar 24 inches (610 mm) long minimum shall be installed on the control end wall at the front edge of the bathtub.

607.4.2.3 Head End Wall. A grab bar 12 inches (305 mm) long minimum shall be installed on the head end wall at the front edge of the bathtub.

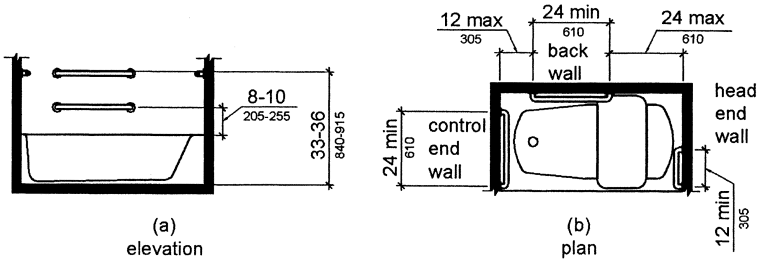

Figure 607.4.2
Grab Bars for Bathtubs with Removable In-Tub Seats

607.5 Controls. Controls, other than drain stoppers, shall be located on an end wall. Controls shall be between the bathtub rim and grab bar, and between the open side of the bathtub and the centerline of the width of the bathtub. Controls shall comply with 309.4.

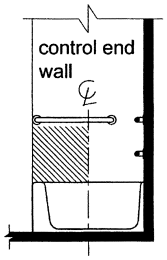

Figure 607.5
Bathtub Control Location

607.6 Shower Spray Unit and Water. A shower spray unit with a hose 59 inches (1500 mm) long minimum that can be used both as a fixed-position shower head and as a hand-held shower shall be provided. The shower spray unit shall have an on/off control with a non-positive shut-off. If an adjustable-height shower head on a vertical bar is used, the bar shall be installed so as not to obstruct the use of grab bars. Bathtub shower spray units shall deliver water that is 120°F (49°C) maximum.

> **Advisory 607.6 Shower Spray Unit and Water.** Ensure that hand-held shower spray units are capable of delivering water pressure substantially equivalent to fixed shower heads.

607.7 Bathtub Enclosures. Enclosures for bathtubs shall not obstruct controls, faucets, shower and spray units or obstruct transfer from wheelchairs onto bathtub seats or into bathtubs. Enclosures on bathtubs shall not have tracks installed on the rim of the open face of the bathtub.

608 Shower Compartments

608.1 General. Shower compartments shall comply with 608.

> **Advisory 608.1 General.** Shower stalls that are 60 inches (1525 mm) wide and have no curb may increase the usability of a bathroom because the shower area provides additional maneuvering space.

608.2 Size and Clearances for Shower Compartments. Shower compartments shall have sizes and clearances complying with 608.2.

608.2.1 Transfer Type Shower Compartments. Transfer type shower compartments shall be 36 inches (915 mm) by 36 inches (915 mm) clear inside dimensions measured at the center points of opposing sides and shall have a 36 inch (915 mm) wide minimum entry on the face of the shower

compartment. Clearance of 36 inches (915 mm) wide minimum by 48 inches (1220 mm) long minimum measured from the control wall shall be provided.

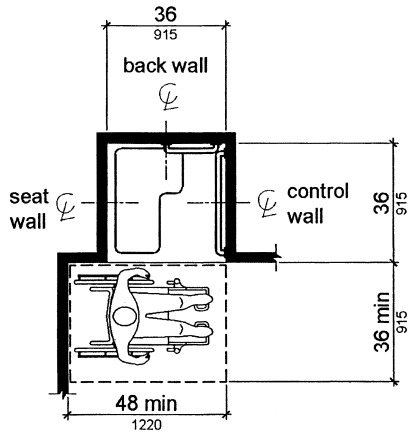

Note: inside finished dimensions measured at the center points of opposing sides

Figure 608.2.1
Transfer Type Shower Compartment Size and Clearance

608.2.2 Standard Roll-In Type Shower Compartments. Standard roll-in type shower compartments shall be 30 inches (760 mm) wide minimum by 60 inches (1525 mm) deep minimum clear inside dimensions measured at center points of opposing sides and shall have a 60 inches (1525 mm) wide minimum entry on the face of the shower compartment.

608.2.2.1 Clearance. A 30 inch (760 mm) wide minimum by 60 inch (1525 mm) long minimum clearance shall be provided adjacent to the open face of the shower compartment.

EXCEPTION: A lavatory complying with 606 shall be permitted on one 30 inch (760 mm) wide minimum side of the clearance provided that it is not on the side of the clearance adjacent to the controls or, where provided, not on the side of the clearance adjacent to the shower seat.

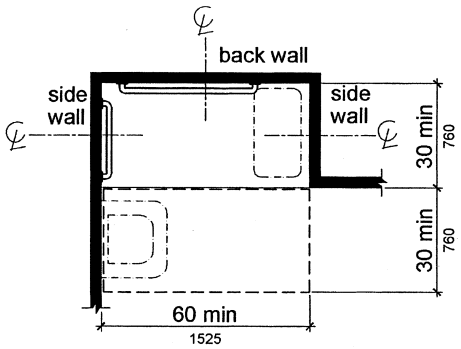

Note: inside finished dimensions measured at the center points of opposing sides

Figure 608.2.2
Standard Roll-In Type Shower Compartment Size and Clearance

608.2.3 Alternate Roll-In Type Shower Compartments. Alternate roll-in type shower compartments shall be 36 inches (915 mm) wide and 60 inches (1525 mm) deep minimum clear inside dimensions measured at center points of opposing sides. A 36 inch (915 mm) wide minimum entry shall be provided at one end of the long side of the compartment.

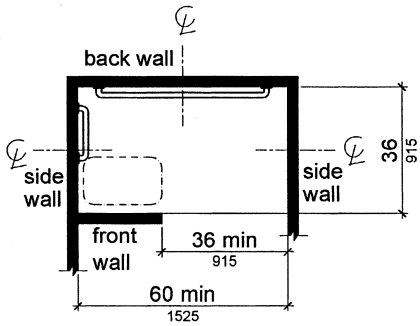

Note: inside finished dimensions measured at the center points of opposing sides

Figure 608.2.3
Alternate Roll-In Type Shower Compartment Size and Clearance

608.3 Grab Bars. Grab bars shall comply with 609 and shall be provided in accordance with 608.3. Where multiple grab bars are used, required horizontal grab bars shall be installed at the same height above the finish floor.

EXCEPTIONS: 1. Grab bars shall not be required to be installed in a shower located in a bathing *facility* for a single occupant accessed only through a private office, and not for *common use* or *public use* provided that reinforcement has been installed in walls and located so as to permit the installation of grab bars complying with 608.3.

2. In *residential dwelling units*, grab bars shall not be required to be installed in showers located in bathing *facilities* provided that reinforcement has been installed in walls and located so as to permit the installation of grab bars complying with 608.3.

608.3.1 Transfer Type Shower Compartments. In transfer type compartments, grab bars shall be provided across the control wall and back wall to a point 18 inches (455 mm) from the control wall.

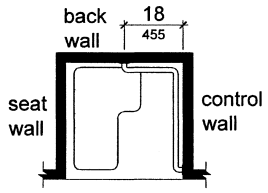

Figure 608.3.1
Grab Bars for Transfer Type Showers

608.3.2 Standard Roll-In Type Shower Compartments. Where a seat is provided in standard roll-in type shower compartments, grab bars shall be provided on the back wall and the side wall opposite the seat. Grab bars shall not be provided above the seat. Where a seat is not provided in standard roll-in type shower compartments, grab bars shall be provided on three walls. Grab bars shall be installed 6 inches (150 mm) maximum from adjacent walls.

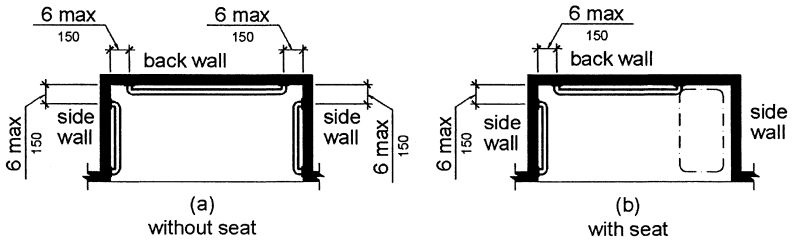

Figure 608.3.2
Grab Bars for Standard Roll-In Type Showers

608.3.3 Alternate Roll-In Type Shower Compartments. In alternate roll-in type shower compartments, grab bars shall be provided on the back wall and the side wall farthest from the compartment entry. Grab bars shall not be provided above the seat. Grab bars shall be installed 6 inches (150 mm) maximum from adjacent walls.

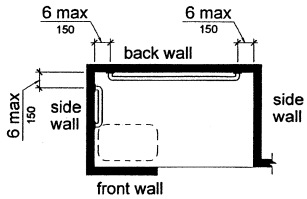

Figure 608.3.3
Grab Bars for Alternate Roll-In Type Showers

608.4 Seats. A folding or non-folding seat shall be provided in transfer type shower compartments. A folding seat shall be provided in roll-in type showers required in *transient lodging* guest rooms with mobility features complying with 806.2. Seats shall comply with 610.

EXCEPTION: In *residential dwelling units*, seats shall not be required in transfer type shower compartments provided that reinforcement has been installed in walls so as to permit the installation of seats complying with 608.4.

608.5 Controls. Controls, faucets, and shower spray units shall comply with 309.4.

608.5.1 Transfer Type Shower Compartments. In transfer type shower compartments, the controls, faucets, and shower spray unit shall be installed on the side wall opposite the seat 38 inches (965 mm) minimum and 48 inches (1220 mm) maximum above the shower floor and shall be located on the control wall 15 inches (380 mm) maximum from the centerline of the seat toward the shower opening.

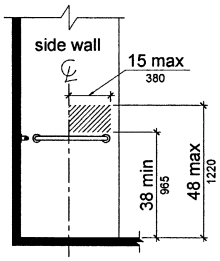

Figure 608.5.1
Transfer Type Shower Compartment Control Location

608.5.2 Standard Roll-In Type Shower Compartments. In standard roll-in type shower compartments, the controls, faucets, and shower spray unit shall be located above the grab bar, but no higher than 48 inches (1220 mm) above the shower floor. Where a seat is provided, the controls, faucets, and shower spray unit shall be installed on the back wall adjacent to the seat wall and shall be located 27 inches (685 mm) maximum from the seat wall.

Advisory 608.5.2 Standard Roll-in Type Shower Compartments. In standard roll-in type showers without seats, the shower head and operable parts can be located on any of the three walls of the shower without adversely affecting accessibility.

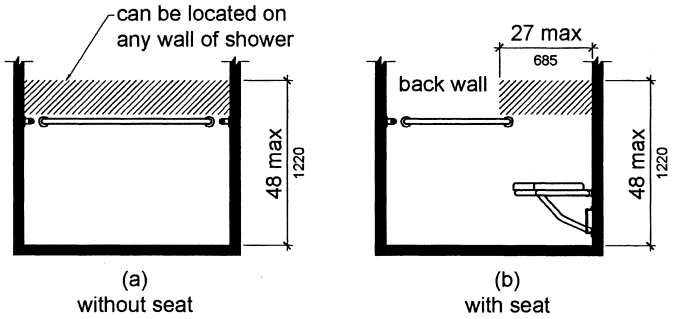

Figure 608.5.2
Standard Roll-In Type Shower Compartment Control Location

608.5.3 Alternate Roll-In Type Shower Compartments. In alternate roll-in type shower compartments, the controls, faucets, and shower spray unit shall be located above the grab bar, but no higher than 48 inches (1220 mm) above the shower floor. Where a seat is provided, the controls, faucets, and shower spray unit shall be located on the side wall adjacent to the seat 27 inches (685 mm) maximum from the side wall behind the seat or shall be located on the back wall opposite the seat 15 inches (380 mm) maximum, left or right, of the centerline of the seat. Where a seat is not provided, the controls, faucets, and shower spray unit shall be installed on the side wall farthest from the compartment entry.

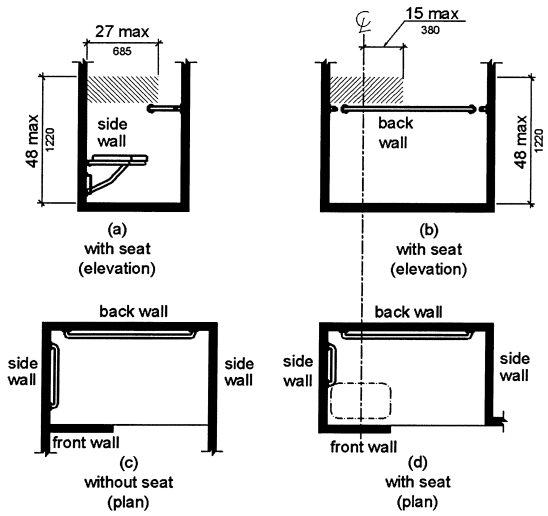

Figure 608.5.3
Alternate Roll-In Type Shower Compartment Control Location

608.6 Shower Spray Unit and Water. A shower spray unit with a hose 59 inches (1500 mm) long minimum that can be used both as a fixed-position shower head and as a hand-held shower shall be provided. The shower spray unit shall have an on/off control with a non-positive shut-off. If an adjustable-height shower head on a vertical bar is used, the bar shall be installed so as not to obstruct the use of grab bars. Shower spray units shall deliver water that is 120°F (49°C) maximum.

EXCEPTION: A fixed shower head located at 48 inches (1220 mm) maximum above the shower finish floor shall be permitted instead of a hand-held spray unit in *facilities* that are not medical care *facilities*, long-term care *facilities*, *transient lodging* guest rooms, or *residential dwelling units*.

> **Advisory 608.6 Shower Spray Unit and Water.** Ensure that hand-held shower spray units are capable of delivering water pressure substantially equivalent to fixed shower heads.

608.7 Thresholds. Thresholds in roll-in type shower compartments shall be ½ inch (13 mm) high maximum in accordance with 303. In transfer type shower compartments, thresholds ½ inch (13 mm) high maximum shall be beveled, rounded, or vertical.

EXCEPTION: A threshold 2 inches (51 mm) high maximum shall be permitted in transfer type shower compartments in existing *facilities* where provision of a ½ inch (13 mm) high threshold would disturb the structural reinforcement of the floor slab.

608.8 Shower Enclosures. Enclosures for shower compartments shall not obstruct controls, faucets, and shower spray units or obstruct transfer from wheelchairs onto shower seats.

609 Grab Bars

609.1 General. Grab bars in toilet *facilities* and bathing *facilities* shall comply with 609.

609.2 Cross Section. Grab bars shall have a cross section complying with 609.2.1 or 609.2.2.

609.2.1 Circular Cross Section. Grab bars with circular cross sections shall have an outside diameter of 1¼ inches (32 mm) minimum and 2 inches (51 mm) maximum.

609.2.2 Non-Circular Cross Section. Grab bars with non-circular cross sections shall have a cross-section dimension of 2 inches (51 mm) maximum and a perimeter dimension of 4 inches (100 mm) minimum and 4.8 inches (120 mm) maximum.

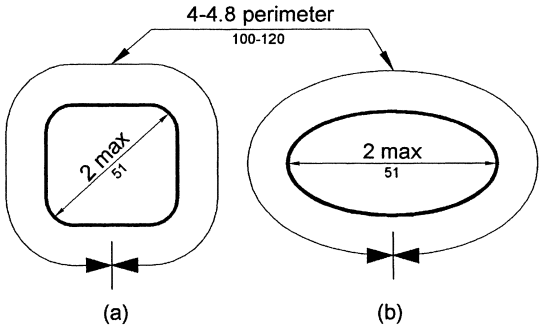

Figure 609.2.2
Grab Bar Non-Circular Cross Section

609.3 Spacing. The *space* between the wall and the grab bar shall be 1½ inches (38 mm). The *space* between the grab bar and projecting objects below and at the ends shall be 1½ inches (38 mm) minimum. The *space* between the grab bar and projecting objects above shall be 12 inches (305 mm) minimum.

EXCEPTION: The *space* between the grab bars and shower controls, shower fittings, and other grab bars above shall be permitted to be 1½ inches (38 mm) minimum.

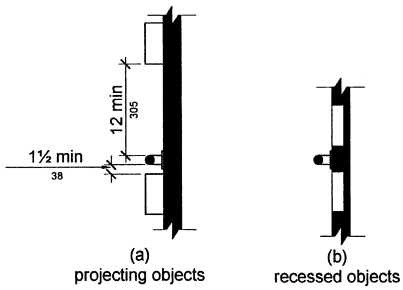

Figure 609.3
Spacing of Grab Bars

609.4 Position of Grab Bars. Grab bars shall be installed in a horizontal position, 33 inches (840 mm) minimum and 36 inches (915 mm) maximum above the finish floor measured to the top of the gripping surface, except that at water closets for *children's use* complying with 604.9, grab bars shall be installed in a horizontal position 18 inches (455 mm) minimum and 27 inches (685 mm) maximum above the finish floor measured to the top of the gripping surface. The height of the lower grab bar on the back wall of a bathtub shall comply with 607.4.1.1 or 607.4.2.1.

609.5 Surface Hazards. Grab bars and any wall or other surfaces adjacent to grab bars shall be free of sharp or abrasive *elements* and shall have rounded edges.

609.6 Fittings. Grab bars shall not rotate within their fittings.

609.7 Installation. Grab bars shall be installed in any manner that provides a gripping surface at the specified locations and that does not obstruct the required clear floor *space*.

609.8 Structural Strength. Allowable stresses shall not be exceeded for materials used when a vertical or horizontal force of 250 pounds (1112 N) is applied at any point on the grab bar, fastener, mounting device, or supporting structure.

610 Seats

610.1 General. Seats in bathtubs and shower compartments shall comply with 610.

610.2 Bathtub Seats. The top of bathtub seats shall be 17 inches (430 mm) minimum and 19 inches (485 mm) maximum above the bathroom finish floor. The depth of a removable in-tub seat shall be 15 inches (380 mm) minimum and 16 inches (405 mm) maximum. The seat shall be capable of secure placement. Permanent seats at the head end of the bathtub shall be 15 inches (380 mm) deep minimum and shall extend from the back wall to or beyond the outer edge of the bathtub.

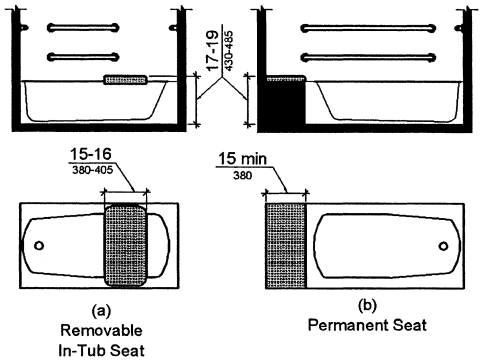

Figure 610.2
Bathtub Seats

610.3 Shower Compartment Seats. Where a seat is provided in a standard roll-in shower compartment, it shall be a folding type, shall be installed on the side wall adjacent to the controls, and shall extend from the back wall to a point within 3 inches (75 mm) of the compartment entry. Where a seat is provided in an alternate roll-in type shower compartment, it shall be a folding type, shall be installed on the front wall opposite the back wall, and shall extend from the adjacent side wall to a point within 3 inches (75 mm) of the compartment entry. In transfer-type showers, the seat shall extend from the back wall to a point within 3 inches (75 mm) of the compartment entry. The top of the seat shall be 17 inches (430 mm) minimum and 19 inches (485 mm) maximum above the bathroom finish floor. Seats shall comply with 610.3.1 or 610.3.2.

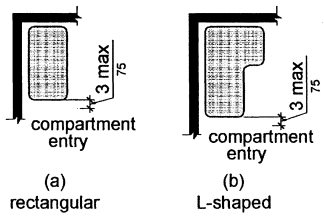

Figure 610.3
Extent of Seat

610.3.1 Rectangular Seats. The rear edge of a rectangular seat shall be 2½ inches (64 mm) maximum and the front edge 15 inches (380 mm) minimum and 16 inches (405 mm) maximum from

the seat wall. The side edge of the seat shall be 1½ inches (38 mm) maximum from the adjacent wall.

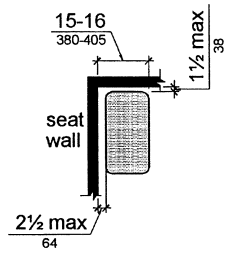

Figure 610.3.1
Rectangular Shower Seat

610.3.2 L-Shaped Seats. The rear edge of an L-shaped seat shall be 2½ inches (64 mm) maximum and the front edge 15 inches (380 mm) minimum and 16 inches (405 mm) maximum from the seat wall. The rear edge of the "L" portion of the seat shall be 1½ inches (38 mm) maximum from the wall and the front edge shall be 14 inches (355 mm) minimum and 15 inches (380 mm) maximum from the wall. The end of the "L" shall be 22 inches (560 mm) minimum and 23 inches maximum (585 mm) from the main seat wall.

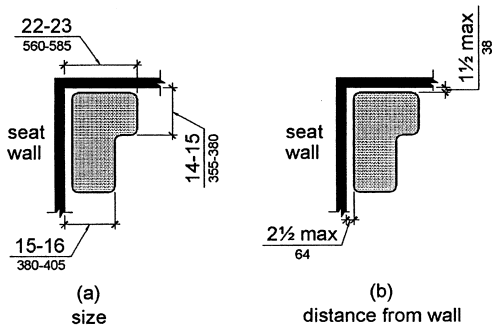

Figure 610.3.2
L-Shaped Shower Seat

610.4 Structural Strength. Allowable stresses shall not be exceeded for materials used when a vertical or horizontal force of 250 pounds (1112 N) is applied at any point on the seat, fastener, mounting device, or supporting structure.

611 Washing Machines and Clothes Dryers

611.1 General. Washing machines and clothes dryers shall comply with 611.

611.2 Clear Floor Space. A clear floor or ground *space* complying with 305 positioned for parallel approach shall be provided. The clear floor or ground *space* shall be centered on the appliance.

611.3 Operable Parts. *Operable parts*, including doors, lint screens, and detergent and bleach compartments shall comply with 309.

611.4 Height. Top loading machines shall have the door to the laundry compartment located 36 inches (915 mm) maximum above the finish floor. Front loading machines shall have the bottom of the opening to the laundry compartment located 15 inches (380 mm) minimum and 36 inches (915 mm) maximum above the finish floor.

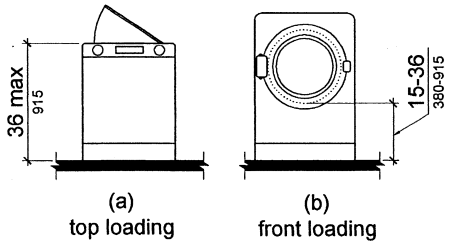

Figure 611.4
Height of Laundry Compartment Opening

612 Saunas and Steam Rooms

612.1 General. Saunas and steam rooms shall comply with 612.

612.2 Bench. Where seating is provided in saunas and steam rooms, at least one bench shall comply with 903. Doors shall not swing into the clear floor *space* required by 903.2.

EXCEPTION: A readily removable bench shall be permitted to obstruct the turning *space* required by 612.3 and the clear floor or ground *space* required by 903.2.

612.3 Turning Space. A turning *space* complying with 304 shall be provided within saunas and steam rooms.

CHAPTER 7: COMMUNICATION ELEMENTS AND FEATURES

701 General

701.1 Scope. The provisions of Chapter 7 shall apply where required by Chapter 2 or where referenced by a requirement in this document.

702 Fire Alarm Systems

702.1 General. Fire alarm systems shall have permanently installed audible and visible alarms complying with NFPA 72 (1999 or 2002 edition) (incorporated by reference, see "Referenced Standards" in Chapter 1), except that the maximum allowable sound level of audible notification appliances complying with section 4-3.2.1 of NFPA 72 (1999 edition) shall have a sound level no more than 110 dB at the minimum hearing distance from the audible appliance. In addition, alarms in guest rooms required to provide communication features shall comply with sections 4-3 and 4-4 of NFPA 72 (1999 edition) or sections 7.4 and 7.5 of NFPA 72 (2002 edition).

EXCEPTION: Fire alarm systems in medical care *facilities* shall be permitted to be provided in accordance with industry practice.

703 Signs

703.1 General. Signs shall comply with 703. Where both visual and *tactile characters* are required, either one sign with both visual and *tactile characters*, or two separate signs, one with visual, and one with *tactile characters*, shall be provided.

703.2 Raised Characters. Raised *characters* shall comply with 703.2 and shall be duplicated in braille complying with 703.3. Raised *characters* shall be installed in accordance with 703.4.

> **Advisory 703.2 Raised Characters.** Signs that are designed to be read by touch should not have sharp or abrasive edges.

703.2.1 Depth. Raised *characters* shall be 1/32 inch (0.8 mm) minimum above their background.

703.2.2 Case. *Characters* shall be uppercase.

703.2.3 Style. *Characters* shall be sans serif. *Characters* shall not be italic, oblique, script, highly decorative, or of other unusual forms.

703.2.4 Character Proportions. *Characters* shall be selected from fonts where the width of the uppercase letter "O" is 55 percent minimum and 110 percent maximum of the height of the uppercase letter "I".

703.2.5 Character Height. *Character* height measured vertically from the baseline of the *character* shall be 5/8 inch (16 mm) minimum and 2 inches (51 mm) maximum based on the height of the uppercase letter "I".

EXCEPTION: Where separate raised and visual *characters* with the same information are provided, raised *character* height shall be permitted to be ½ inch (13 mm) minimum.

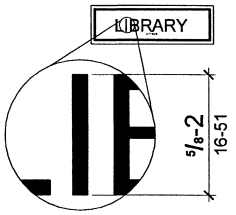

Figure 703.2.5
Height of Raised Characters

703.2.6 Stroke Thickness. Stroke thickness of the uppercase letter "I" shall be 15 percent maximum of the height of the *character.*

703.2.7 Character Spacing. *Character* spacing shall be measured between the two closest points of adjacent raised *characters* within a message, excluding word *spaces.* Where *characters* have rectangular cross sections, spacing between individual raised *characters* shall be 1/8 inch (3.2 mm) minimum and 4 times the raised *character* stroke width maximum. Where *characters* have other cross sections, spacing between individual raised *characters* shall be 1/16 inch (1.6 mm) minimum and 4 times the raised *character* stroke width maximum at the base of the cross sections, and 1/8 inch (3.2 mm) minimum and 4 times the raised *character* stroke width maximum at the top of the cross sections. *Characters* shall be separated from raised borders and decorative *elements* 3/8 inch (9.5 mm) minimum.

703.2.8 Line Spacing. Spacing between the baselines of separate lines of raised *characters* within a message shall be 135 percent minimum and 170 percent maximum of the raised *character* height.

703.3 Braille. Braille shall be contracted (Grade 2) and shall comply with 703.3 and 703.4.

703.3.1 Dimensions and Capitalization. Braille dots shall have a domed or rounded shape and shall comply with Table 703.3.1. The indication of an uppercase letter or letters shall only be used before the first word of sentences, proper nouns and names, individual letters of the alphabet, initials, and acronyms.

Table 703.3.1 Braille Dimensions

Measurement Range	Minimum in Inches Maximum in Inches
Dot base diameter	0.059 (1.5 mm) to 0.063 (1.6 mm)
Distance between two dots in the same cell[1]	0.090 (2.3 mm) to 0.100 (2.5 mm)
Distance between corresponding dots in adjacent cells[1]	0.241 (6.1 mm) to 0.300 (7.6 mm)
Dot height	0.025 (0.6 mm) to 0.037 (0.9 mm)
Distance between corresponding dots from one cell directly below[1]	0.395 (10 mm) to 0.400 (10.2 mm)

1. Measured center to center.

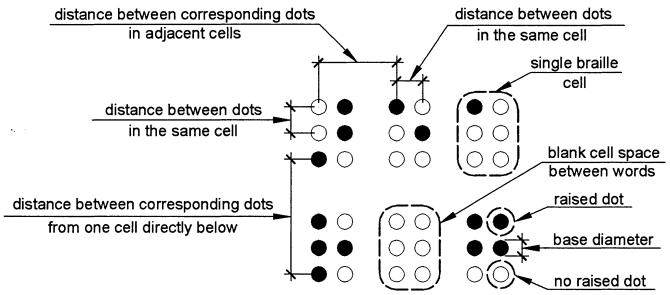

Figure 703.3.1
Braille Measurement

703.3.2 Position. Braille shall be positioned below the corresponding text. If text is multi-lined, braille shall be placed below the entire text. Braille shall be separated 3/8 inch (9.5 mm) minimum from any other *tactile characters* and 3/8 inch (9.5 mm) minimum from raised borders and decorative *elements*.

EXCEPTION: Braille provided on elevator car controls shall be separated 3/16 inch (4.8 mm) minimum and shall be located either directly below or adjacent to the corresponding raised *characters* or symbols.

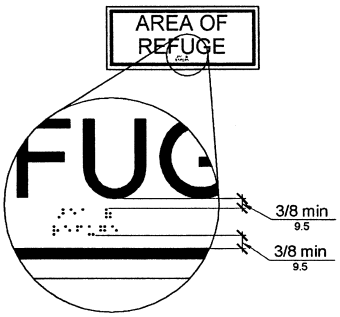

Figure 703.3.2
Position of Braille

703.4 Installation Height and Location. Signs with *tactile characters* shall comply with 703.4.

703.4.1 Height Above Finish Floor or Ground. *Tactile characters* on signs shall be located 48 inches (1220 mm) minimum above the finish floor or ground surface, measured from the baseline of the lowest *tactile character* and 60 inches (1525 mm) maximum above the finish floor or ground surface, measured from the baseline of the highest *tactile character.*

EXCEPTION: *Tactile characters* for elevator car controls shall not be required to comply with 703.4.1.

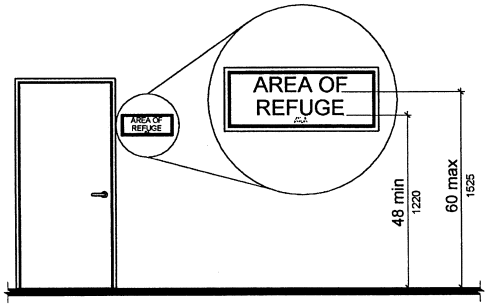

Figure 703.4.1
Height of Tactile Characters Above Finish Floor or Ground

703.4.2 Location. Where a *tactile* sign is provided at a door, the sign shall be located alongside the door at the latch side. Where a *tactile* sign is provided at double doors with one active leaf, the sign shall be located on the inactive leaf. Where a *tactile* sign is provided at double doors with two active leafs, the sign shall be located to the right of the right hand door. Where there is no wall *space* at the latch side of a single door or at the right side of double doors, signs shall be located on the nearest adjacent wall. Signs containing *tactile characters* shall be located so that a clear floor *space* of 18 inches (455 mm) minimum by 18 inches (455 mm) minimum, centered on the *tactile characters*, is provided beyond the arc of any door swing between the closed position and 45 degree open position.

EXCEPTION: Signs with *tactile characters* shall be permitted on the push side of doors with closers and without hold-open devices.

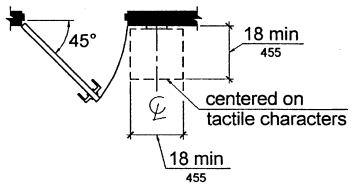

Figure 703.4.2
Location of Tactile Signs at Doors

703.5 Visual Characters. Visual *characters* shall comply with 703.5.

EXCEPTION: Where visual *characters* comply with 703.2 and are accompanied by braille complying with 703.3, they shall not be required to comply with 703.5.2 through 703.5.9.

703.5.1 Finish and Contrast. *Characters* and their background shall have a non-glare finish. *Characters* shall contrast with their background with either light *characters* on a dark background or dark *characters* on a light background.

> **Advisory 703.5.1 Finish and Contrast.** Signs are more legible for persons with low vision when characters contrast as much as possible with their background. Additional factors affecting the ease with which the text can be distinguished from its background include shadows cast by lighting sources, surface glare, and the uniformity of the text and its background colors and textures.

703.5.2 Case. *Characters* shall be uppercase or lowercase or a combination of both.

703.5.3 Style. *Characters* shall be conventional in form. *Characters* shall not be italic, oblique, script, highly decorative, or of other unusual forms.

703.5.4 Character Proportions. *Characters* shall be selected from fonts where the width of the uppercase letter "O" is 55 percent minimum and 110 percent maximum of the height of the uppercase letter "I".

703.5.5 Character Height. Minimum *character* height shall comply with Table 703.5.5. Viewing distance shall be measured as the horizontal distance between the *character* and an obstruction preventing further approach towards the sign. *Character* height shall be based on the uppercase letter "I".

Table 703.5.5 Visual Character Height

Height to Finish Floor or Ground From Baseline of Character	Horizontal Viewing Distance	Minimum Character Height
40 inches (1015 mm) to less than or equal to 70 inches (1780 mm)	less than 72 inches (1830 mm)	5/8 inch (16 mm)
	72 inches (1830 mm) and greater	5/8 inch (16 mm), plus 1/8 inch (3.2 mm) per foot (305 mm) of viewing distance above 72 inches (1830 mm)
Greater than 70 inches (1780 mm) to less than or equal to 120 inches (3050 mm)	less than 180 inches (4570 mm)	2 inches (51 mm)
	180 inches (4570 mm) and greater	2 inches (51 mm), plus 1/8 inch (3.2 mm) per foot (305 mm) of viewing distance above 180 inches (4570 mm)
greater than 120 inches (3050 mm)	less than 21 feet (6400 mm)	3 inches (75 mm)
	21 feet (6400 mm) and greater	3 inches (75 mm), plus 1/8 inch (3.2 mm) per foot (305 mm) of viewing distance above 21 feet (6400 mm)

703.5.6 Height From Finish Floor or Ground. Visual *characters* shall be 40 inches (1015 mm) minimum above the finish floor or ground.

EXCEPTION: Visual *characters* indicating elevator car controls shall not be required to comply with 703.5.6.

703.5.7 Stroke Thickness. Stroke thickness of the uppercase letter "I" shall be 10 percent minimum and 30 percent maximum of the height of the *character*.

703.5.8 Character Spacing. *Character* spacing shall be measured between the two closest points of adjacent *characters*, excluding word *spaces*. Spacing between individual *characters* shall be 10 percent minimum and 35 percent maximum of *character* height.

703.5.9 Line Spacing. Spacing between the baselines of separate lines of *characters* within a message shall be 135 percent minimum and 170 percent maximum of the *character* height.

703.6 Pictograms. *Pictograms* shall comply with 703.6.

703.6.1 Pictogram Field. *Pictograms* shall have a field height of 6 inches (150 mm) minimum. *Characters* and braille shall not be located in the *pictogram* field.

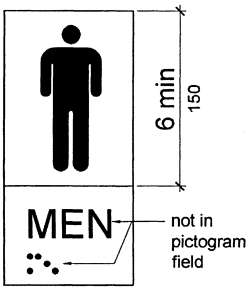

Figure 703.6.1
Pictogram Field

703.6.2 Finish and Contrast. *Pictograms* and their field shall have a non-glare finish. *Pictograms* shall contrast with their field with either a light *pictogram* on a dark field or a dark *pictogram* on a light field.

> **A703.6.2 Finish and Contrast.** Signs are more legible for persons with low vision when characters contrast as much as possible with their background. Additional factors affecting the ease with which the text can be distinguished from its background include shadows cast by lighting sources, surface glare, and the uniformity of the text and background colors and textures.

703.6.3 Text Descriptors. *Pictograms* shall have text descriptors located directly below the *pictogram* field. Text descriptors shall comply with 703.2, 703.3 and 703.4.

703.7 Symbols of Accessibility. Symbols of *accessibility* shall comply with 703.7.

703.7.1 Finish and Contrast. Symbols of *accessibility* and their background shall have a non-glare finish. Symbols of *accessibility* shall contrast with their background with either a light symbol on a dark background or a dark symbol on a light background.

> **Advisory 703.7.1 Finish and Contrast.** Signs are more legible for persons with low vision when characters contrast as much as possible with their background. Additional factors affecting the ease with which the text can be distinguished from its background include shadows cast by lighting sources, surface glare, and the uniformity of the text and background colors and textures.

703.7.2 Symbols.

703.7.2.1 International Symbol of Accessibility. The International Symbol of *Accessibility* shall comply with Figure 703.7.2.1.

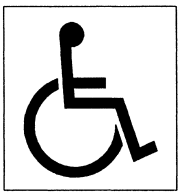

Figure 703.7.2.1
International Symbol of Accessibility

703.7.2.2 International Symbol of TTY. The International Symbol of *TTY* shall comply with Figure 703.7.2.2.

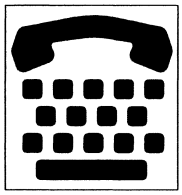

Figure 703.7.2.2
International Symbol of TTY

703.7.2.3 Volume Control Telephones. Telephones with a volume control shall be identified by a *pictogram* of a telephone handset with radiating sound waves on a square field such as shown in Figure 703.7.2.3.

Figure 703.7.2.3
Volume Control Telephone

703.7.2.4 Assistive Listening Systems. *Assistive listening systems* shall be identified by the International Symbol of Access for Hearing Loss complying with Figure 703.7.2.4.

Figure 703.7.2.4
International Symbol of Access for Hearing Loss

704 Telephones

704.1 General. Public telephones shall comply with 704.

704.2 Wheelchair Accessible Telephones. Wheelchair *accessible* telephones shall comply with 704.2.

704.2.1 Clear Floor or Ground Space. A clear floor or ground *space* complying with 305 shall be provided. The clear floor or ground *space* shall not be obstructed by bases, enclosures, or seats.

> **Advisory 704.2.1 Clear Floor or Ground Space.** Because clear floor and ground space is required to be unobstructed, telephones, enclosures and related telephone book storage cannot encroach on the required clear floor or ground space and must comply with the provisions for protruding objects. (See Section 307).

704.2.1.1 Parallel Approach. Where a parallel approach is provided, the distance from the edge of the telephone enclosure to the face of the telephone unit shall be 10 inches (255 mm) maximum.

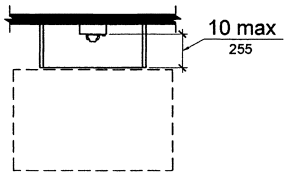

Figure 704.2.1.1
Parallel Approach to Telephone

704.2.1.2 Forward Approach. Where a forward approach is provided, the distance from the front edge of a counter within the telephone enclosure to the face of the telephone unit shall be 20 inches (510 mm) maximum.

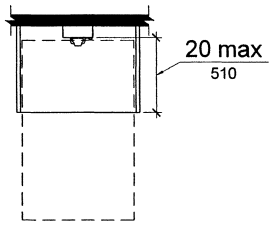

Figure 704.2.1.2
Forward Approach to Telephone

704.2.2 Operable Parts. *Operable parts* shall comply with 309. Telephones shall have push-button controls where such service is available.

704.2.3 Telephone Directories. Telephone directories, where provided, shall be located in accordance with 309.

704.2.4 Cord Length. The cord from the telephone to the handset shall be 29 inches (735 mm) long minimum.

704.3 Volume Control Telephones. Public telephones required to have volume controls shall be equipped with a receive volume control that provides a gain adjustable up to 20 dB minimum. For incremental volume control, provide at least one intermediate step of 12 dB of gain minimum. An automatic reset shall be provided.

Advisory 704.3 Volume Control Telephones. Amplifiers on pay phones are located in the base or the handset or are built into the telephone. Most are operated by pressing a button or key. If the microphone in the handset is not being used, a mute button that temporarily turns off the microphone can also reduce the amount of background noise which the person hears in the earpiece. If a volume adjustment is provided that allows the user to set the level anywhere from the base volume to the upper requirement of 20 dB, there is no need to specify a lower limit. If a stepped volume control is provided, one of the intermediate levels must provide 12 dB of gain. Consider compatibility issues when matching an amplified handset with a phone or phone system. Amplified handsets that can be switched with pay telephone handsets are available. Portable and in-line amplifiers can be used with some phones but are not practical at most public phones covered by these requirements.

704.4 TTYs. *TTY*s required at a public pay telephone shall be permanently affixed within, or adjacent to, the telephone enclosure. Where an acoustic coupler is used, the telephone cord shall be sufficiently long to allow connection of the *TTY* and the telephone receiver.

> **Advisory 704.4 TTYs.** Ensure that sufficient electrical service is available where TTYs are to be installed.

704.4.1 Height. When in use, the touch surface of *TTY* keypads shall be 34 inches (865 mm) minimum above the finish floor.

EXCEPTION: Where seats are provided, *TTYs* shall not be required to comply with 704.4.1.

> **Advisory 704.4.1 Height.** A telephone with a TTY installed underneath cannot also be a wheelchair accessible telephone because the required 34 inches (865 mm) minimum keypad height can causes the highest operable part of the telephone, usually the coin slot, to exceed the maximum permitted side and forward reach ranges. (See Section 308).
>
> **Advisory 704.4.1 Height Exception.** While seats are not required at TTYs, reading and typing at a TTY is more suited to sitting than standing. Facilities that often provide seats at TTY's include, but are not limited to, airports and other passenger terminals or stations, courts, art galleries, and convention centers.

704.5 TTY Shelf. Public pay telephones required to accommodate portable *TTYs* shall be equipped with a shelf and an electrical outlet within or adjacent to the telephone enclosure. The telephone handset shall be capable of being placed flush on the surface of the shelf. The shelf shall be capable of accommodating a *TTY* and shall have 6 inches (150 mm) minimum vertical clearance above the area where the *TTY* is to be placed.

705 Detectable Warnings

705.1 General. *Detectable warnings* shall consist of a surface of truncated domes and shall comply with 705.

705.1.1 Dome Size. Truncated domes in a *detectable warning* surface shall have a base diameter of 0.9 inch (23 mm) minimum and 1.4 inches (36 mm) maximum, a top diameter of 50 percent of the base diameter minimum to 65 percent of the base diameter maximum, and a height of 0.2 inch (5.1 mm).

705.1.2 Dome Spacing. Truncated domes in a *detectable warning* surface shall have a center-to-center spacing of 1.6 inches (41 mm) minimum and 2.4 inches (61 mm) maximum, and a base-to-base spacing of 0.65 inch (17 mm) minimum, measured between the most adjacent domes on a square grid.

705.1.3 Contrast. *Detectable warning* surfaces shall contrast visually with adjacent walking surfaces either light-on-dark, or dark-on-light.

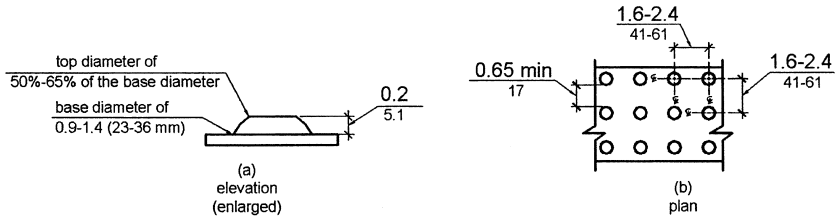

Figure 705.1
Size and Spacing of Truncated Domes

705.2 Platform Edges. *Detectable warning* surfaces at platform boarding edges shall be 24 inches (610 mm) wide and shall extend the full length of the *public use* areas of the platform.

706 Assistive Listening Systems

706.1 General. *Assistive listening systems* required in *assembly areas* shall comply with 706.

> **Advisory 706.1 General.** Assistive listening systems are generally categorized by their mode of transmission. There are hard-wired systems and three types of wireless systems: induction loop, infrared, and FM radio transmission. Each has different advantages and disadvantages that can help determine which system is best for a given application. For example, an FM system may be better than an infrared system in some open-air assemblies since infrared signals are less effective in sunlight. On the other hand, an infrared system is typically a better choice than an FM system where confidential transmission is important because it will be contained within a given space.
>
> The technical standards for assistive listening systems describe minimum performance levels for volume, interference, and distortion. Sound pressure levels (SPL), expressed in decibels, measure output sound volume. Signal-to-noise ratio (SNR or S/N), also expressed in decibels, represents the relationship between the loudness of a desired sound (the signal) and the background noise in a space or piece of equipment. The higher the SNR, the more intelligible the signal. The peak clipping level limits the distortion in signal output produced when high-volume sound waves are manipulated to serve assistive listening devices.
>
> Selecting or specifying an effective assistive listening system for a large or complex venue requires assistance from a professional sound engineer. The Access Board has published technical assistance on assistive listening devices and systems.

706.2 Receiver Jacks. Receivers required for use with an *assistive listening system* shall include a 1/8 inch (3.2 mm) standard mono jack.

706.3 Receiver Hearing-Aid Compatibility. Receivers required to be hearing-aid compatible shall interface with telecoils in hearing aids through the provision of neckloops.

> **Advisory 706.3 Receiver Hearing-Aid Compatibility.** Neckloops and headsets that can be worn as neckloops are compatible with hearing aids. Receivers that are not compatible include earbuds, which may require removal of hearing aids, earphones, and headsets that must be worn over the ear, which can create disruptive interference in the transmission and can be uncomfortable for people wearing hearing aids.

706.4 Sound Pressure Level. *Assistive listening systems* shall be capable of providing a sound pressure level of 110 dB minimum and 118 dB maximum with a dynamic range on the volume control of 50 dB.

706.5 Signal-to-Noise Ratio. The signal-to-noise ratio for internally generated noise in *assistive listening systems* shall be 18 dB minimum.

706.6 Peak Clipping Level. Peak clipping shall not exceed 18 dB of clipping relative to the peaks of speech.

707 Automatic Teller Machines and Fare Machines

> **Advisory 707 Automatic Teller Machines and Fare Machines.** Interactive transaction machines (ITMs), other than ATMs, are not covered by Section 707. However, for entities covered by the ADA, the Department of Justice regulations that implement the ADA provide additional guidance regarding the relationship between these requirements and elements that are not directly addressed by these requirements. Federal procurement law requires that ITMs purchased by the Federal government comply with standards issued by the Access Board under Section 508 of the Rehabilitation Act of 1973, as amended. This law covers a variety of products, including computer hardware and software, websites, phone systems, fax machines, copiers, and similar technologies. For more information on Section 508 consult the Access Board's website at www.access-board.gov.

707.1 General. Automatic teller machines and fare machines shall comply with 707.

> **Advisory 707.1 General.** If farecards have one tactually distinctive corner they can be inserted with greater accuracy. Token collection devices that are designed to accommodate tokens which are perforated can allow a person to distinguish more readily between tokens and common coins. Place accessible gates and fare vending machines in close proximity to other accessible elements when feasible so the facility is easier to use.

707.2 Clear Floor or Ground Space. A clear floor or ground *space* complying with 305 shall be provided.

EXCEPTION: Clear floor or ground *space* shall not be required at drive-up only automatic teller machines and fare machines.

707.3 Operable Parts. *Operable parts* shall comply with 309. Unless a clear or correct key is provided, each *operable part* shall be able to be differentiated by sound or touch, without activation.

EXCEPTION: Drive-up only automatic teller machines and fare machines shall not be required to comply with 309.2 and 309.3.

707.4 Privacy. Automatic teller machines shall provide the opportunity for the same degree of privacy of input and output available to all individuals.

> **Advisory 707.4 Privacy.** In addition to people who are blind or visually impaired, people with limited reach who use wheelchairs or have short stature, who cannot effectively block the ATM screen with their bodies, may prefer to use speech output. Speech output users can benefit from an option to render the visible screen blank, thereby affording them greater personal security and privacy.

707.5 Speech Output. Machines shall be speech enabled. Operating instructions and orientation, visible transaction prompts, user input verification, error messages, and all displayed information for full use shall be *accessible* to and independently usable by individuals with vision impairments. Speech shall be delivered through a mechanism that is readily available to all users, including but not limited to, an industry standard connector or a telephone handset. Speech shall be recorded or digitized human, or synthesized.

EXCEPTIONS: 1. Audible tones shall be permitted instead of speech for visible output that is not displayed for security purposes, including but not limited to, asterisks representing personal identification numbers.

2. Advertisements and other similar information shall not be required to be audible unless they convey information that can be used in the transaction being conducted.

3. Where speech synthesis cannot be supported, dynamic alphabetic output shall not be required to be audible.

> **Advisory 707.5 Speech Output.** If an ATM provides additional functions such as dispensing coupons, selling theater tickets, or providing copies of monthly statements, all such functions must be available to customers using speech output. To avoid confusion at the ATM, the method of initiating the speech mode should be easily discoverable and should not require specialized training. For example, if a telephone handset is provided, lifting the handset can initiate the speech mode.

707.5.1 User Control. Speech shall be capable of being repeated or interrupted. Volume control shall be provided for the speech function.

EXCEPTION: Speech output for any single function shall be permitted to be automatically interrupted when a transaction is selected.

707.5.2 Receipts. Where receipts are provided, speech output devices shall provide audible balance inquiry information, error messages, and all other information on the printed receipt necessary to complete or verify the transaction.

EXCEPTIONS: 1. Machine location, date and time of transaction, customer account number, and the machine identifier shall not be required to be audible.

2. Information on printed receipts that duplicates information available on-screen shall not be required to be presented in the form of an audible receipt.
3. Printed copies of bank statements and checks shall not be required to be audible.

707.6 Input. Input devices shall comply with 707.6.

707.6.1 Input Controls. At least one *tactilely* discernible input control shall be provided for each function. Where provided, key surfaces not on active areas of display screens, shall be raised above surrounding surfaces. Where membrane keys are the only method of input, each shall be *tactilely* discernable from surrounding surfaces and adjacent keys.

707.6.2 Numeric Keys. Numeric keys shall be arranged in a 12-key ascending or descending telephone keypad layout. The number five key shall be *tactilely* distinct from the other keys.

Advisory 707.6.2 Numeric Keys. Telephone keypads and computer keyboards differ in one significant feature, ascending versus descending numerical order. Both types of keypads are acceptable, provided the computer-style keypad is organized similarly to the number pad located at the right on most computer keyboards, and does not resemble the line of numbers located above the computer keys.

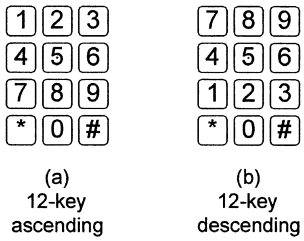

Figure 707.6.2
Numeric Key Layout

707.6.3 Function Keys. Function keys shall comply with 707.6.3.

707.6.3.1 Contrast. Function keys shall contrast visually from background surfaces. *Characters* and symbols on key surfaces shall contrast visually from key surfaces. Visual contrast shall be either light-on-dark or dark-on-light.

EXCEPTION: *Tactile* symbols required by 707.6.3.2 shall not be required to comply with 707.6.3.1.

707.6.3.2 Tactile Symbols. Function key surfaces shall have *tactile* symbols as follows: Enter or Proceed key: raised circle; Clear or Correct key: raised left arrow; Cancel key: raised letter ex; Add Value key: raised plus sign; Decrease Value key: raised minus sign.

707.7 Display Screen. The display screen shall comply with 707.7.

EXCEPTION: Drive-up only automatic teller machines and fare machines shall not be required to comply with 707.7.1.

707.7.1 Visibility. The display screen shall be visible from a point located 40 inches (1015 mm) above the center of the clear floor *space* in front of the machine.

707.7.2 Characters. *Characters* displayed on the screen shall be in a sans serif font. *Characters* shall be 3/16 inch (4.8 mm) high minimum based on the uppercase letter "I". *Characters* shall contrast with their background with either light *characters* on a dark background or dark *characters* on a light background.

707.8 Braille Instructions. Braille instructions for initiating the speech mode shall be provided. Braille shall comply with 703.3.

708 Two-Way Communication Systems

708.1 General. Two-way communication systems shall comply with 708.

> **Advisory 708.1 General.** Devices that do not require handsets are easier to use by people who have a limited reach.

708.2 Audible and Visual Indicators. The system shall provide both audible and visual signals.

> **Advisory 708.2 Audible and Visual Indicators.** A light can be used to indicate visually that assistance is on the way. Signs indicating the meaning of visual signals should be provided.

708.3 Handsets. Handset cords, if provided, shall be 29 inches (735 mm) long minimum.

708.4 Residential Dwelling Unit Communication Systems. Communications systems between a *residential dwelling unit* and a *site*, *building*, or floor *entrance* shall comply with 708.4.

708.4.1 Common Use or Public Use System Interface. The *common use* or *public use* system interface shall include the capability of supporting voice and *TTY* communication with the *residential dwelling unit* interface.

708.4.2 Residential Dwelling Unit Interface. The *residential dwelling unit* system interface shall include a telephone jack capable of supporting voice and *TTY* communication with the *common use* or *public use* system interface.

CHAPTER 8: SPECIAL ROOMS, SPACES, AND ELEMENTS

801 General

801.1 Scope. The provisions of Chapter 8 shall apply where required by Chapter 2 or where referenced by a requirement in this document.

> **Advisory 801.1 Scope.** Facilities covered by these requirements are also subject to the requirements of the other chapters. For example, 806 addresses guest rooms in transient lodging facilities while 902 contains the technical specifications for dining surfaces. If a transient lodging facility contains a restaurant, the restaurant must comply with requirements in other chapters such as those applicable to certain dining surfaces.

802 Wheelchair Spaces, Companion Seats, and Designated Aisle Seats

802.1 Wheelchair Spaces. *Wheelchair spaces* shall comply with 802.1.

802.1.1 Floor or Ground Surface. The floor or ground surface of *wheelchair spaces* shall comply with 302. Changes in level are not permitted.

EXCEPTION: Slopes not steeper than 1:48 shall be permitted.

802.1.2 Width. A single *wheelchair space* shall be 36 inches (915 mm) wide minimum Where two adjacent *wheelchair spaces* are provided, each *wheelchair space* shall be 33 inches (840 mm) wide minimum.

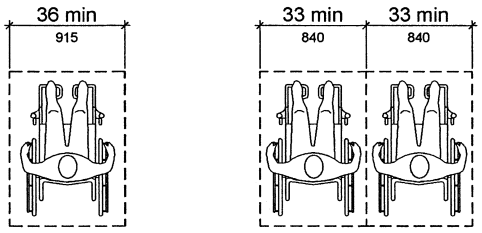

(a) single space (b) two spaces

Figure 802.1.2
Width of Wheelchair Spaces

802.1.3 Depth. Where a *wheelchair space* can be entered from the front or rear, the *wheelchair space* shall be 48 inches (1220 mm) deep minimum. Where a *wheelchair space* can be entered only from the side, the *wheelchair space* shall be 60 inches (1525 mm) deep minimum.

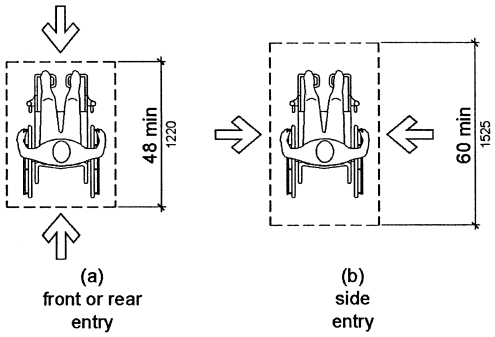

Figure 802.1.3
Depth of Wheelchair Spaces

802.1.4 Approach. *Wheelchair spaces* shall adjoin *accessible* routes. *Accessible* routes shall not overlap *wheelchair spaces.*

> **Advisory 802.1.4 Approach.** Because accessible routes serving wheelchair spaces are not permitted to overlap the clear floor space at wheelchair spaces, access to any wheelchair space cannot be through another wheelchair space.

802.1.5 Overlap. *Wheelchair spaces* shall not overlap *circulation paths.*

> **Advisory 802.1.5 Overlap.** The term "circulation paths" used in Section 802.1.5 means aisle width required by applicable building or life safety codes for the specific assembly occupancy. Where the circulation path provided is wider than the required aisle width, the wheelchair space may intrude into that portion of the circulation path that is provided in excess of the required aisle width.

802.2 Lines of Sight. Lines of sight to the screen, performance area, or playing field for spectators in *wheelchair spaces* shall comply with 802.2.

802.2.1 Lines of Sight Over Seated Spectators. Where spectators are expected to remain seated during events, spectators in *wheelchair spaces* shall be afforded lines of sight complying with 802.2.1.

802.2.1.1 Lines of Sight Over Heads. Where spectators are provided lines of sight over the heads of spectators seated in the first row in front of their seats, spectators seated in *wheelchair spaces* shall be afforded lines of sight over the heads of seated spectators in the first row in front of *wheelchair spaces.*

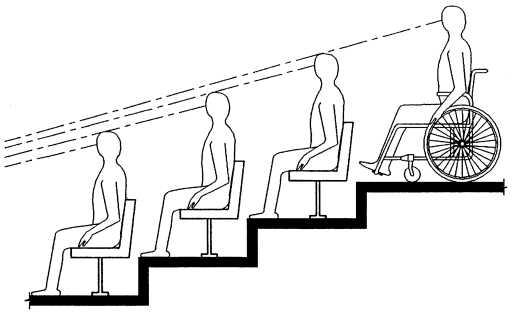

Figure 802.2.1.1
Lines of Sight Over the Heads of Seated Spectators

802.2.1.2 Lines of Sight Between Heads. Where spectators are provided lines of sight over the shoulders and between the heads of spectators seated in the first row in front of their seats, spectators seated in *wheelchair spaces* shall be afforded lines of sight over the shoulders and between the heads of seated spectators in the first row in front of *wheelchair spaces.*

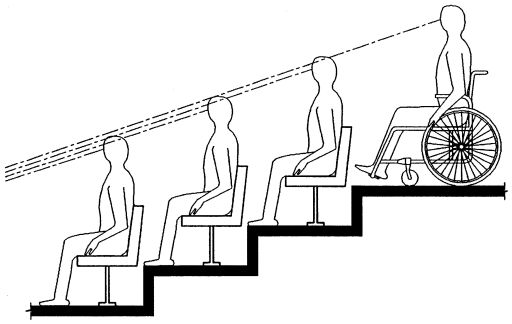

Figure 802.2.1.2
Lines of Sight Between the Heads of Seated Spectators

802.2.2 Lines of Sight Over Standing Spectators. Where spectators are expected to stand during events, spectators in *wheelchair spaces* shall be afforded lines of sight complying with 802.2.2.

802.2.2.1 Lines of Sight Over Heads. Where standing spectators are provided lines of sight over the heads of spectators standing in the first row in front of their seats, spectators seated in

wheelchair spaces shall be afforded lines of sight over the heads of standing spectators in the first row in front of *wheelchair spaces*.

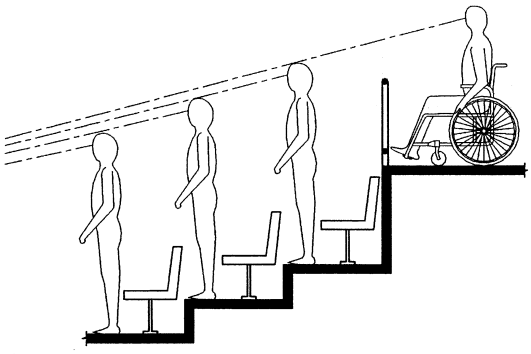

Figure 802.2.2.1
Lines of Sight Over the Heads of Standing Spectators

802.2.2.2 Lines of Sight Between Heads. Where standing spectators are provided lines of sight over the shoulders and between the heads of spectators standing in the first row in front of their seats, spectators seated in *wheelchair spaces* shall be afforded lines of sight over the shoulders and between the heads of standing spectators in the first row in front of *wheelchair spaces*.

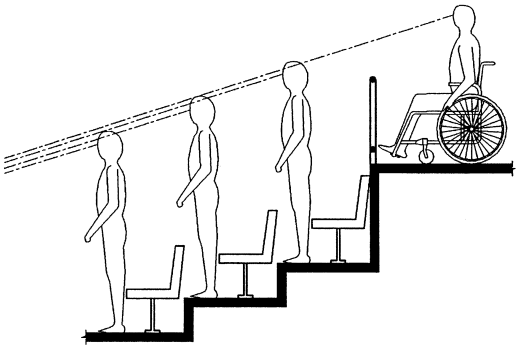

Figure 802.2.2.2
Lines of Sight Between the Heads of Standing Spectators

802.3 Companion Seats. Companion seats shall comply with 802.3.

802.3.1 Alignment. In row seating, companion seats shall be located to provide shoulder alignment with adjacent *wheelchair spaces*. The shoulder alignment point of the *wheelchair space* shall be measured 36 inches (915 mm) from the front of the *wheelchair space*. The floor surface of the companion seat shall be at the same elevation as the floor surface of the *wheelchair space*.

802.3.2 Type. Companion seats shall be equivalent in size, quality, comfort, and amenities to the seating in the immediate area. Companion seats shall be permitted to be movable.

802.4 Designated Aisle Seats. Designated aisle seats shall comply with 802.4.

802.4.1 Armrests. Where armrests are provided on the seating in the immediate area, folding or retractable armrests shall be provided on the aisle side of the seat.

802.4.2 Identification. Each designated aisle seat shall be identified by a sign or marker.

> **Advisory 802.4.2 Identification.** Seats with folding or retractable armrests are intended for use by individuals who have difficulty walking. Consider identifying such seats with signs that contrast (light-on-dark or dark-on-light) and that are also photo luminescent.

803 Dressing, Fitting, and Locker Rooms

803.1 General. Dressing, fitting, and locker rooms shall comply with 803.

> **Advisory 803.1 General.** Partitions and doors should be designed to ensure people using accessible dressing and fitting rooms privacy equivalent to that afforded other users of the facility. Section 903.5 requires dressing room bench seats to be installed so that they are at the same height as a typical wheelchair seat, 17 inches (430 mm) to 19 inches (485 mm). However, wheelchair seats can be lower than dressing room benches for people of short stature or children using wheelchairs.

803.2 Turning Space. Turning *space* complying with 304 shall be provided within the room.

803.3 Door Swing. Doors shall not swing into the room unless a clear floor or ground *space* complying with 305.3 is provided beyond the arc of the door swing.

803.4 Benches. A bench complying with 903 shall be provided within the room.

803.5 Coat Hooks and Shelves. Coat hooks provided within the room shall be located within one of the reach ranges specified in 308. Shelves shall be 40 inches (1015 mm) minimum and 48 inches (1220 mm) maximum above the finish floor or ground.

804 Kitchens and Kitchenettes

804.1 General. Kitchens and kitchenettes shall comply with 804.

804.2 Clearance. Where a pass through kitchen is provided, clearances shall comply with 804.2.1. Where a U-shaped kitchen is provided, clearances shall comply with 804.2.2.

EXCEPTION: *Spaces* that do not provide a cooktop or conventional range shall not be required to comply with 804.2.

> **Advisory 804.2 Clearance.** Clearances are measured from the furthest projecting face of all opposing base cabinets, counter tops, appliances, or walls, excluding hardware.

804.2.1 Pass Through Kitchen. In pass through kitchens where counters, appliances or cabinets are on two opposing sides, or where counters, appliances or cabinets are opposite a parallel wall, clearance between all opposing base cabinets, counter tops, appliances, or walls within kitchen work areas shall be 40 inches (1015 mm) minimum. Pass through kitchens shall have two entries.

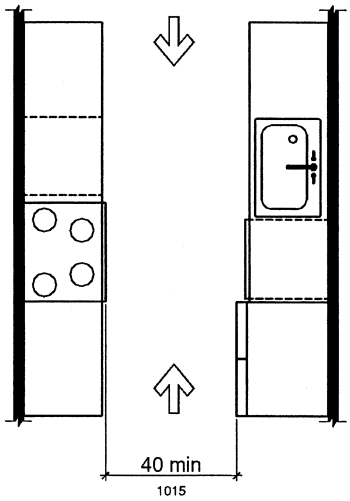

Figure 804.2.1
Pass Through Kitchens

804.2.2 U-Shaped. In U-shaped kitchens enclosed on three contiguous sides, clearance between all opposing base cabinets, counter tops, appliances, or walls within kitchen work areas shall be 60 inches (1525 mm) minimum.

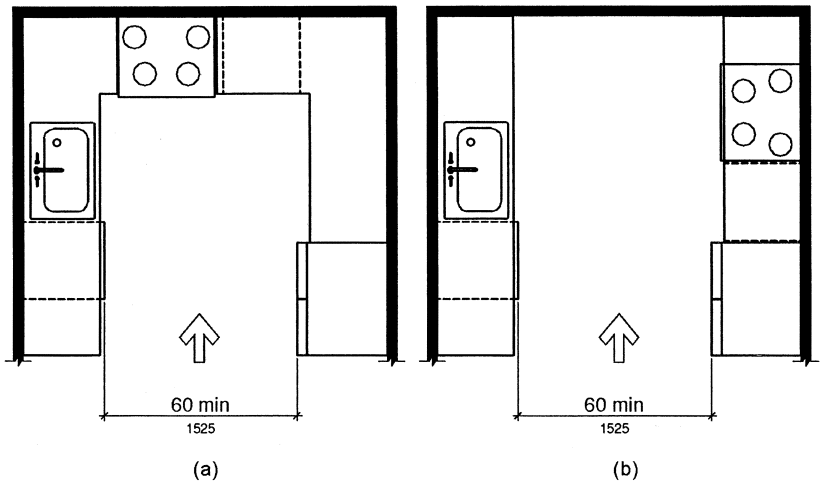

Figure 804.2.2
U-Shaped Kitchens

804.3 Kitchen Work Surface. In *residential dwelling units* required to comply with 809, at least one 30 inches (760 mm) wide minimum section of counter shall provide a kitchen work surface that complies with 804.3.

804.3.1 Clear Floor or Ground Space. A clear floor *space* complying with 305 positioned for a forward approach shall be provided. The clear floor or ground *space* shall be centered on the kitchen work surface and shall provide knee and toe clearance complying with 306.

EXCEPTION: Cabinetry shall be permitted under the kitchen work surface provided that all of the following conditions are met:
(a) the cabinetry can be removed without removal or replacement of the kitchen work surface;
(b) the finish floor extends under the cabinetry; and
(c) the walls behind and surrounding the cabinetry are finished.

804.3.2 Height. The kitchen work surface shall be 34 inches (865 mm) maximum above the finish floor or ground.

EXCEPTION: A counter that is adjustable to provide a kitchen work surface at variable heights, 29 inches (735 mm) minimum and 36 inches (915 mm) maximum, shall be permitted.

804.3.3 Exposed Surfaces. There shall be no sharp or abrasive surfaces under the work surface counters.

804.4 Sinks. Sinks shall comply with 606.

804.5 Storage. At least 50 percent of shelf *space* in storage *facilities* shall comply with 811.

804.6 Appliances. Where provided, kitchen appliances shall comply with 804.6.

804.6.1 Clear Floor or Ground Space. A clear floor or ground *space* complying with 305 shall be provided at each kitchen appliance. Clear floor or ground *spaces* shall be permitted to overlap.

804.6.2 Operable Parts. All appliance controls shall comply with 309.
EXCEPTIONS: 1. Appliance doors and door latching devices shall not be required to comply with 309.4.
2. Bottom-hinged appliance doors, when in the open position, shall not be required to comply with 309.3.

804.6.3 Dishwasher. Clear floor or ground *space* shall be positioned adjacent to the dishwasher door. The dishwasher door, in the open position, shall not obstruct the clear floor or ground *space* for the dishwasher or the sink.

804.6.4 Range or Cooktop. Where a forward approach is provided, the clear floor or ground *space* shall provide knee and toe clearance complying with 306. Where knee and toe *space* is provided, the underside of the range or cooktop shall be insulated or otherwise configured to prevent burns, abrasions, or electrical shock. The location of controls shall not require reaching across burners.

804.6.5 Oven. Ovens shall comply with 804.6.5.

804.6.5.1 Side-Hinged Door Ovens. Side-hinged door ovens shall have the work surface required by 804.3 positioned adjacent to the latch side of the oven door.

804.6.5.2 Bottom-Hinged Door Ovens. Bottom-hinged door ovens shall have the work surface required by 804.3 positioned adjacent to one side of the door.

804.6.5.3 Controls. Ovens shall have controls on front panels.

804.6.6 Refrigerator/Freezer. Combination refrigerators and freezers shall have at least 50 percent of the freezer *space* 54 inches (1370 mm) maximum above the finish floor or ground. The clear floor or ground *space* shall be positioned for a parallel approach to the *space* dedicated to a refrigerator/freezer with the centerline of the clear floor or ground *space* offset 24 inches (610 mm) maximum from the centerline of the dedicated *space*.

805 Medical Care and Long-Term Care Facilities

805.1 General. Medical care *facility* and long-term care *facility* patient or resident sleeping rooms required to provide mobility features shall comply with 805.

805.2 Turning Space. Turning *space* complying with 304 shall be provided within the room.

805.3 Clear Floor or Ground Space. A clear floor *space* complying with 305 shall be provided on each side of the bed. The clear floor *space* shall be positioned for parallel approach to the side of the bed.

805.4 Toilet and Bathing Rooms. Toilet and bathing rooms that are provided as part of a patient or resident sleeping room shall comply with 603. Where provided, no fewer than one water closet, one lavatory, and one bathtub or shower shall comply with the applicable requirements of 603 through 610.

806 Transient Lodging Guest Rooms

806.1 General. *Transient lodging* guest rooms shall comply with 806. Guest rooms required to provide mobility features shall comply with 806.2. Guest rooms required to provide communication features shall comply with 806.3.

806.2 Guest Rooms with Mobility Features. Guest rooms required to provide mobility features shall comply with 806.2.

> **Advisory 806.2 Guest Rooms.** The requirements in Section 806.2 do not include requirements that are common to all accessible spaces. For example, closets in guest rooms must comply with the applicable provisions for storage specified in scoping.

806.2.1 Living and Dining Areas. Living and dining areas shall be *accessible*.

806.2.2 Exterior Spaces. Exterior *spaces*, including patios, terraces and balconies, that serve the guest room shall be *accessible*.

806.2.3 Sleeping Areas. At least one sleeping area shall provide a clear floor *space* complying with 305 on both sides of a bed. The clear floor *space* shall be positioned for parallel approach to the side of the bed.

EXCEPTION: Where a single clear floor *space* complying with 305 positioned for parallel approach is provided between two beds, a clear floor or ground *space* shall not be required on both sides of a bed.

806.2.4 Toilet and Bathing Facilities. At least one bathroom that is provided as part of a guest room shall comply with 603. No fewer than one water closet, one lavatory, and one bathtub or shower shall comply with applicable requirements of 603 through 610. In addition, required roll-in shower compartments shall comply with 608.2.2 or 608.2.3. Toilet and bathing fixtures required to comply with 603 through 610 shall be permitted to be located in more than one toilet or bathing area, provided that travel between fixtures does not require travel between other parts of the guest room.

806.2.4.1 Vanity Counter Top Space. If vanity counter top *space* is provided in non-accessible guest toilet or bathing rooms, comparable vanity counter top *space*, in terms of size and proximity to the lavatory, shall also be provided in *accessible* guest toilet or bathing rooms.

> **Advisory 806.2.4.1 Vanity Counter Top Space.** This provision is intended to ensure that accessible guest rooms are provided with comparable vanity counter top space.

806.2.5 Kitchens and Kitchenettes. Kitchens and kitchenettes shall comply with 804.

806.2.6 Turning Space. Turning *space* complying with 304 shall be provided within the guest room.

806.3 Guest Rooms with Communication Features. Guest rooms required to provide communication features shall comply with 806.3.

> **Advisory 806.3 Guest Rooms with Communication Features.** In guest rooms required to have accessible communication features, consider ensuring compatibility with adaptive equipment used by people with hearing impairments. To ensure communication within the facility, as well as on commercial lines, provide telephone interface jacks that are compatible with both digital and analog signal use. If an audio headphone jack is provided on a speaker phone, a cutoff switch can be included in the jack so that insertion of the jack cuts off the speaker. If a telephone-like handset is used, the external speakers can be turned off when the handset is removed from the cradle. For headset or external amplification system compatibility, a standard subminiature jack installed in the telephone will provide the most flexibility.

806.3.1 Alarms. Where emergency warning systems are provided, alarms complying with 702 shall be provided.

806.3.2 Notification Devices. Visible notification devices shall be provided to alert room occupants of incoming telephone calls and a door knock or bell. Notification devices shall not be connected to visible alarm signal appliances. Telephones shall have volume controls compatible with the telephone system and shall comply with 704.3. Telephones shall be served by an electrical outlet complying with 309 located within 48 inches (1220 mm) of the telephone to facilitate the use of a *TTY.*

807 Holding Cells and Housing Cells

807.1 General. Holding cells and housing cells shall comply with 807.

807.2 Cells with Mobility Features. Cells required to provide mobility features shall comply with 807.2.

807.2.1 Turning Space. Turning *space* complying with 304 shall be provided within the cell.

807.2.2 Benches. Where benches are provided, at least one bench shall comply with 903.

807.2.3 Beds. Where beds are provided, clear floor *space* complying with 305 shall be provided on at least one side of the bed. The clear floor *space* shall be positioned for parallel approach to the side of the bed.

807.2.4 Toilet and Bathing Facilities. Toilet *facilities* or bathing *facilities* that are provided as part of a cell shall comply with 603. Where provided, no fewer than one water closet, one lavatory, and one bathtub or shower shall comply with the applicable requirements of 603 through 610.

Advisory 807.2.4 Toilet and Bathing Facilities. In holding cells, housing cells, or rooms required to be accessible, these requirements do not require a separate toilet room.

807.3 Cells with Communication Features. Cells required to provide communication features shall comply with 807.3.

807.3.1 Alarms. Where audible emergency alarm systems are provided to serve the occupants of cells, visible alarms complying with 702 shall be provided.

EXCEPTION: Visible alarms shall not be required where inmates or detainees are not allowed independent means of egress.

807.3.2 Telephones. Telephones, where provided within cells, shall have volume controls complying with 704.3.

808 Courtrooms

808.1 General. Courtrooms shall comply with 808.

808.2 Turning Space. Where provided, areas that are raised or depressed and accessed by *ramps* or platform lifts with entry *ramps* shall provide unobstructed turning *space* complying with 304.

808.3 Clear Floor Space. Each jury box and witness stand shall have, within its defined area, clear floor *space* complying with 305.

EXCEPTION: In *alterations*, *wheelchair spaces* are not required to be located within the defined area of raised jury boxes or witness stands and shall be permitted to be located outside these *spaces* where *ramp* or platform lift access poses a hazard by restricting or projecting into a means of egress required by the appropriate *administrative authority.*

808.4 Judges' Benches and Courtroom Stations. Judges' benches, clerks' stations, bailiffs' stations, deputy clerks' stations, court reporters' stations and litigants' and counsel stations shall comply with 902.

809 Residential Dwelling Units

809.1 General. *Residential dwelling units* shall comply with 809. *Residential dwelling units* required to provide mobility features shall comply with 809.2 through 809.4. *Residential dwelling units* required to provide communication features shall comply with 809.5.

809.2 Accessible Routes. *Accessible* routes complying with Chapter 4 shall be provided within *residential dwelling units* in accordance with 809.2.

EXCEPTION: *Accessible* routes shall not be required to or within unfinished attics or unfinished basements.

809.2.1 Location. At least one *accessible* route shall connect all *spaces* and *elements* which are a part of the *residential dwelling unit.* Where only one *accessible* route is provided, it shall not pass through bathrooms, closets, or similar *spaces.*

809.2.2 Turning Space. All rooms served by an *accessible* route shall provide a turning *space* complying with 304.

EXCEPTION: Turning *space* shall not be required in exterior *spaces* 30 inches (760 mm) maximum in depth or width.

Advisory 809.2.2 Turning Space. It is generally acceptable to use required clearances to provide wheelchair turning space. For example, in kitchens, 804.3.1 requires at least one work surface with clear floor space complying with 306 to be centered beneath. If designers elect to provide clear floor space that is at least 36 inches (915 mm) wide, as opposed to the required 30 inches (760 mm) wide, that clearance can be part of a T-turn, thereby maximizing efficient use of the kitchen area. However, the overlap of turning space must be limited to one segment of the T-turn so that back-up maneuvering is not restricted. It would, therefore, be unacceptable to use both the clearances under the work surface and the sink as part of a T-turn. See Section 304.3.2 regarding T-turns.

809.3 Kitchen. Where a kitchen is provided, it shall comply with 804.

809.4 Toilet Facilities and Bathing Facilities. At least one bathroom shall comply with 603. No fewer than one of each type of fixture provided shall comply with applicable requirements of 603 through 610. Toilet and bathing fixtures required to comply with 603 through 610 shall be located in the same toilet and bathing area, such that travel between fixtures does not require travel between other parts of the *residential dwelling unit.*

Advisory 809.4 Toilet Facilities and Bathing Facilities. In an effort to promote space efficiency, vanity counter top space in accessible residential dwelling units is often omitted. This omission does not promote equal access or equal enjoyment of the unit. Where comparable units have vanity counter tops, accessible units should also have vanity counter tops located as close as possible to the lavatory for convenient access to toiletries.

809.5 Residential Dwelling Units with Communication Features. *Residential dwelling units* required to provide communication features shall comply with 809.5.

809.5.1 Building Fire Alarm System. Where a *building* fire alarm system is provided, the system wiring shall be extended to a point within the *residential dwelling unit* in the vicinity of the *residential dwelling unit* smoke detection system.

809.5.1.1 Alarm Appliances. Where alarm appliances are provided within a *residential dwelling unit* as part of the *building* fire alarm system, they shall comply with 702.

809.5.1.2 Activation. All visible alarm appliances provided within the *residential dwelling unit* for *building* fire alarm notification shall be activated upon activation of the *building* fire alarm in the portion of the *building* containing the *residential dwelling unit.*

809.5.2 Residential Dwelling Unit Smoke Detection System. *Residential dwelling unit* smoke detection systems shall comply with NFPA 72 (1999 or 2002 edition) (incorporated by reference, see "Referenced Standards" in Chapter 1).

809.5.2.1 Activation. All visible alarm appliances provided within the *residential dwelling unit* for smoke detection notification shall be activated upon smoke detection.

809.5.3 Interconnection. The same visible alarm appliances shall be permitted to provide notification of *residential dwelling unit* smoke detection and *building* fire alarm activation.

809.5.4 Prohibited Use. Visible alarm appliances used to indicate *residential dwelling unit* smoke detection or *building* fire alarm activation shall not be used for any other purpose within the *residential dwelling unit*.

809.5.5 Residential Dwelling Unit Primary Entrance. Communication features shall be provided at the *residential dwelling unit* primary *entrance* complying with 809.5.5.

809.5.5.1 Notification. A hard-wired electric doorbell shall be provided. A button or switch shall be provided outside the *residential dwelling unit* primary *entrance*. Activation of the button or switch shall initiate an audible tone and visible signal within the *residential dwelling unit*. Where visible doorbell signals are located in sleeping areas, they shall have controls to deactivate the signal.

809.5.5.2 Identification. A means for visually identifying a visitor without opening the *residential dwelling unit* entry door shall be provided and shall allow for a minimum 180 degree range of view.

> **Advisory 809.5.5.2 Identification.** In doors, peepholes that include prisms clarify the image and should offer a wide-angle view of the hallway or exterior for both standing persons and wheelchair users. Such peepholes can be placed at a standard height and permit a view from several feet from the door.

809.5.6 Site, Building, or Floor Entrance. Where a system, including a closed-circuit system, permitting voice communication between a visitor and the occupant of the *residential dwelling unit* is provided, the system shall comply with 708.4.

810 Transportation Facilities

810.1 General. Transportation *facilities* shall comply with 810.

810.2 Bus Boarding and Alighting Areas. Bus boarding and alighting areas shall comply with 810.2.

> **Advisory 810.2 Bus Boarding and Alighting Areas.** At bus stops where a shelter is provided, the bus stop pad can be located either within or outside of the shelter.

810.2.1 Surface. Bus stop boarding and alighting areas shall have a firm, stable surface.

810.2.2 Dimensions. Bus stop boarding and alighting areas shall provide a clear length of 96 inches (2440 mm) minimum, measured perpendicular to the curb or vehicle roadway edge, and a clear width of 60 inches (1525 mm) minimum, measured parallel to the vehicle roadway.

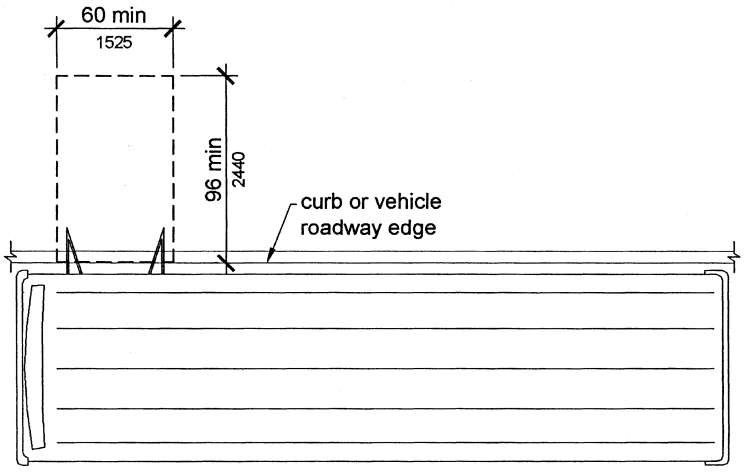

Figure 810.2.2
Dimensions of Bus Boarding and Alighting Areas

810.2.3 Connection. Bus stop boarding and alighting areas shall be connected to streets, sidewalks, or pedestrian paths by an *accessible* route complying with 402.

810.2.4 Slope. Parallel to the roadway, the slope of the bus stop boarding and alighting area shall be the same as the roadway, to the maximum extent practicable. Perpendicular to the roadway, the slope of the bus stop boarding and alighting area shall not be steeper than1:48.

810.3 Bus Shelters. Bus shelters shall provide a minimum clear floor or ground *space* complying with 305 entirely within the shelter. Bus shelters shall be connected by an *accessible* route complying with 402 to a boarding and alighting area complying with 810.2.

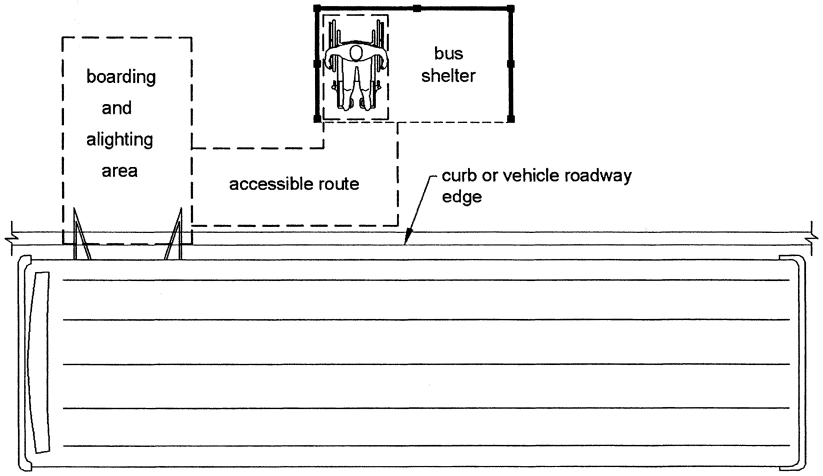

Figure 810.3
Bus Shelters

810.4 Bus Signs. Bus route identification signs shall comply with 703.5.1 through 703.5.4, and 703.5.7 and 703.5.8. In addition, to the maximum extent practicable, bus route identification signs shall comply with 703.5.5.

EXCEPTION: Bus schedules, timetables and maps that are posted at the bus stop or bus bay shall not be required to comply.

810.5 Rail Platforms. Rail platforms shall comply with 810.5.

810.5.1 Slope. Rail platforms shall not exceed a slope of 1:48 in all directions.

EXCEPTION: Where platforms serve vehicles operating on existing track or track laid in existing roadway, the slope of the platform parallel to the track shall be permitted to be equal to the slope (grade) of the roadway or existing track.

810.5.2 Detectable Warnings. Platform boarding edges not protected by platform screens or guards shall have *detectable warnings* complying with 705 along the full length of the *public use* area of the platform.

810.5.3 Platform and Vehicle Floor Coordination. Station platforms shall be positioned to coordinate with vehicles in accordance with the applicable requirements of 36 CFR Part 1192. Low-level platforms shall be 8 inches (205 mm) minimum above top of rail.

EXCEPTION: Where vehicles are boarded from sidewalks or street-level, low-level platforms shall be permitted to be less than 8 inches (205 mm).

Advisory 810.5.3 Platform and Vehicle Floor Coordination. The height and position of a platform must be coordinated with the floor of the vehicles it serves to minimize the vertical and horizontal gaps, in accordance with the ADA Accessibility Guidelines for Transportation Vehicles (36 CFR Part 1192). The vehicle guidelines, divided by bus, van, light rail, rapid rail, commuter rail, intercity rail, are available at www.access-board.gov. The preferred alignment is a high platform, level with the vehicle floor. In some cases, the vehicle guidelines permit use of a low platform in conjunction with a lift or ramp. Most such low platforms must have a minimum height of eight inches above the top of the rail. Some vehicles are designed to be boarded from a street or the sidewalk along the street and the exception permits such boarding areas to be less than eight inches high.

810.6 Rail Station Signs. Rail station signs shall comply with 810.6.

EXCEPTION. Signs shall not be required to comply with 810.6.1 and 810.6.2 where audible signs are remotely transmitted to hand-held receivers, or are user- or proximity-actuated.

Advisory 810.6 Rail Station Signs Exception. Emerging technologies such as an audible sign systems using infrared transmitters and receivers may provide greater accessibility in the transit environment than traditional Braille and raised letter signs. The transmitters are placed on or next to print signs and transmit their information to an infrared receiver that is held by a person. By scanning an area, the person will hear the sign. This means that signs can be placed well out of reach of Braille readers, even on parapet walls and on walls beyond barriers. Additionally, such signs can be used to provide wayfinding information that cannot be efficiently conveyed on Braille signs.

810.6.1 Entrances. Where signs identify a station or its *entrance*, at least one sign at each *entrance* shall comply with 703.2 and shall be placed in uniform locations to the maximum extent practicable. Where signs identify a station that has no defined *entrance*, at least one sign shall comply with 703.2 and shall be placed in a central location.

810.6.2 Routes and Destinations. Lists of stations, routes and destinations served by the station which are located on boarding areas, platforms, or *mezzanines* shall comply with 703.5. At least one *tactile* sign identifying the specific station and complying with 703.2 shall be provided on each platform or boarding area. Signs covered by this requirement shall, to the maximum extent practicable, be placed in uniform locations within the system.

EXCEPTION: Where sign *space* is limited, *characters* shall not be required to exceed 3 inches (75 mm).

Advisory 810.6.2 Routes and Destinations. Route maps are not required to comply with the informational sign requirements in this document.

810.6.3 Station Names. Stations covered by this section shall have identification signs complying with 703.5. Signs shall be clearly visible and within the sight lines of standing and sitting passengers from within the vehicle on both sides when not obstructed by another vehicle.

> **Advisory 810.6.3 Station Names.** It is also important to place signs at intervals in the station where passengers in the vehicle will be able to see a sign when the vehicle is either stopped at the station or about to come to a stop in the station. The number of signs necessary may be directly related to the size of the lettering displayed on the sign.

810.7 Public Address Systems. Where public address systems convey audible information to the public, the same or equivalent information shall be provided in a visual format.

810.8 Clocks. Where clocks are provided for use by the public, the clock face shall be uncluttered so that its *elements* are clearly visible. Hands, numerals and digits shall contrast with the background either light-on-dark or dark-on-light. Where clocks are installed overhead, numerals and digits shall comply with 703.5.

810.9 Escalators. Where provided, escalators shall comply with the sections 6.1.3.5.6 and 6.1.3.6.5 of ASME A17.1 (incorporated by reference, see "Referenced Standards" in Chapter 1) and shall have a clear width of 32 inches (815 mm) minimum.

EXCEPTION: Existing escalators in *key stations* shall not be required to comply with 810.9.

810.10 Track Crossings. Where a *circulation path* serving boarding platforms crosses tracks, it shall comply with 402.

EXCEPTION: Openings for wheel flanges shall be permitted to be 2½ inches (64 mm) maximum.

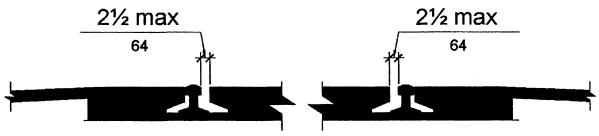

Figure 810.10 (Exception)
Track Crossings

811 Storage

811.1 General. Storage shall comply with 811.

811.2 Clear Floor or Ground Space. A clear floor or ground *space* complying with 305 shall be provided.

811.3 Height. Storage *elements* shall comply with at least one of the reach ranges specified in 308.

811.4 Operable Parts. *Operable parts* shall comply with 309.

CHAPTER 9: BUILT-IN ELEMENTS

901 General

901.1 Scope. The provisions of Chapter 9 shall apply where required by Chapter 2 or where referenced by a requirement in this document.

902 Dining Surfaces and Work Surfaces

902.1 General. Dining surfaces and work surfaces shall comply with 902.2 and 902.3.
EXCEPTION: Dining surfaces and work surfaces for *children's use* shall be permitted to comply with 902.4.

> **Advisory 902.1 General.** Dining surfaces include, but are not limited to, bars, tables, lunch counters, and booths. Examples of work surfaces include writing surfaces, study carrels, student laboratory stations, baby changing and other tables or fixtures for personal grooming, coupon counters, and where covered by the ABA scoping provisions, employee work stations.

902.2 Clear Floor or Ground Space. A clear floor *space* complying with 305 positioned for a forward approach shall be provided. Knee and toe clearance complying with 306 shall be provided.

902.3 Height. The tops of dining surfaces and work surfaces shall be 28 inches (710 mm) minimum and 34 inches (865 mm) maximum above the finish floor or ground.

902.4 Dining Surfaces and Work Surfaces for Children's Use. *Accessible* dining surfaces and work surfaces for *children's use* shall comply with 902.4.
EXCEPTION: Dining surfaces and work surfaces that are used primarily by children 5 years and younger shall not be required to comply with 902.4 where a clear floor or ground *space* complying with 305 positioned for a parallel approach is provided.

902.4.1 Clear Floor or Ground Space. A clear floor *space* complying with 305 positioned for forward approach shall be provided. Knee and toe clearance complying with 306 shall be provided, except that knee clearance 24 inches (610 mm) minimum above the finish floor or ground shall be permitted.

902.4.2 Height. The tops of tables and counters shall be 26 inches (660 mm) minimum and 30 inches (760 mm) maximum above the finish floor or ground.

903 Benches

903.1 General. Benches shall comply with 903.

903.2 Clear Floor or Ground Space. Clear floor or ground *space* complying with 305 shall be provided and shall be positioned at the end of the bench seat and parallel to the short axis of the bench.

903.3 Size. Benches shall have seats that are 42 inches (1065 mm) long minimum and 20 inches (510 mm) deep minimum and 24 inches (610 mm) deep maximum.

903.4 Back Support. The bench shall provide for back support or shall be affixed to a wall. Back support shall be 42 inches (1065 mm) long minimum and shall extend from a point 2 inches (51 mm) maximum above the seat surface to a point 18 inches (455 mm) minimum above the seat surface. Back support shall be 2½ inches (64 mm) maximum from the rear edge of the seat measured horizontally.

> **Advisory 903.4 Back Support.** To assist in transferring to the bench, consider providing grab bars on a wall adjacent to the bench, but not on the seat back. If provided, grab bars cannot obstruct transfer to the bench.

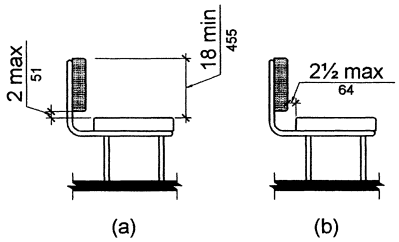

Figure 903.4
Bench Back Support

903.5 Height. The top of the bench seat surface shall be 17 inches (430 mm) minimum and 19 inches (485 mm) maximum above the finish floor or ground.

903.6 Structural Strength. Allowable stresses shall not be exceeded for materials used when a vertical or horizontal force of 250 pounds (1112 N) is applied at any point on the seat, fastener, mounting device, or supporting structure.

903.7 Wet Locations. Where installed in wet locations, the surface of the seat shall be slip resistant and shall not accumulate water.

904 Check-Out Aisles and Sales and Service Counters

904.1 General. Check-out aisles and sales and service counters shall comply with the applicable requirements of 904.

904.2 Approach. All portions of counters required to comply with 904 shall be located adjacent to a walking surface complying with 403.

Advisory 904.2 Approach. If a cash register is provided at the sales or service counter, locate the accessible counter close to the cash register so that a person using a wheelchair is visible to sales or service personnel and to minimize the reach for a person with a disability.

904.3 Check-Out Aisles. Check-out aisles shall comply with 904.3.

904.3.1 Aisle. Aisles shall comply with 403.

904.3.2 Counter. The counter surface height shall be 38 inches (965 mm) maximum above the finish floor or ground. The top of the counter edge protection shall be 2 inches (51 mm) maximum above the top of the counter surface on the aisle side of the check-out counter.

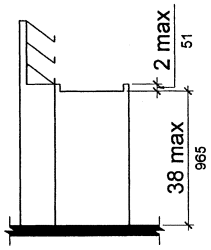

Figure 904.3.2
Check-Out Aisle Counters

904.3.3 Check Writing Surfaces. Where provided, check writing surfaces shall comply with 902.3.

904.4 Sales and Service Counters. Sales counters and service counters shall comply with 904.4.1 or 904.4.2. The *accessible* portion of the counter top shall extend the same depth as the sales or service counter top.

EXCEPTION: In *alterations*, when the provision of a counter complying with 904.4 would result in a reduction of the number of existing counters at work stations or a reduction of the number of existing *mail boxes*, the counter shall be permitted to have a portion which is 24 inches (610 mm) long minimum complying with 904.4.1 provided that the required clear floor or ground *space* is centered on the *accessible* length of the counter.

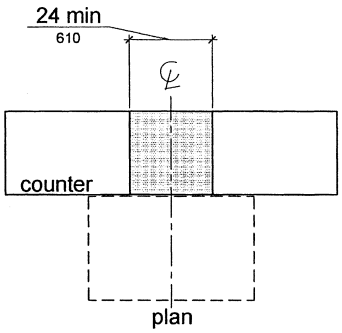

Figure 904.4 (Exception)
Alteration of Sales and Service Counters

904.4.1 Parallel Approach. A portion of the counter surface that is 36 inches (915 mm) long minimum and 36 inches (915 mm) high maximum above the finish floor shall be provided. A clear floor or ground *space* complying with 305 shall be positioned for a parallel approach adjacent to the 36 inch (915 mm) minimum length of counter.

EXCEPTION: Where the provided counter surface is less than 36 inches (915 mm) long, the entire counter surface shall be 36 inches (915 mm) high maximum above the finish floor.

904.4.2 Forward Approach. A portion of the counter surface that is 30 inches (760 mm) long minimum and 36 inches (915 mm) high maximum shall be provided. Knee and toe *space* complying with 306 shall be provided under the counter. A clear floor or ground *space* complying with 305 shall be positioned for a forward approach to the counter.

904.5 Food Service Lines. Counters in food service lines shall comply with 904.5.

904.5.1 Self-Service Shelves and Dispensing Devices. Self-service shelves and dispensing devices for tableware, dishware, condiments, food and beverages shall comply with 308.

904.5.2 Tray Slides. The tops of tray slides shall be 28 inches (710 mm) minimum and 34 inches (865 mm) maximum above the finish floor or ground.

904.6 Security Glazing. Where counters or teller windows have security glazing to separate personnel from the public, a method to facilitate voice communication shall be provided. Telephone handset devices, if provided, shall comply with 704.3.

Advisory 904.6 Security Glazing. Assistive listening devices complying with 706 can facilitate voice communication at counters or teller windows where there is security glazing which promotes distortion in audible information. Where assistive listening devices are installed, place signs complying with 703.7.2.4 to identify those facilities which are so equipped. Other voice communication methods include, but are not limited to, grilles, slats, talk-through baffles, intercoms, or telephone handset devices.

CHAPTER 10: RECREATION FACILITIES

1001 General

1001.1 Scope. The provisions of Chapter 10 shall apply where required by Chapter 2 or where referenced by a requirement in this document.

> **Advisory 1001.1 Scope.** Unless otherwise modified or specifically addressed in Chapter 10, all other ADAAG provisions apply to the design and construction of recreation facilities and elements. The provisions in Section 1001.1 apply wherever these elements are provided. For example, office buildings may contain a room with exercise equipment to which these sections would apply.

1002 Amusement Rides

1002.1 General. *Amusement rides* shall comply with 1002.

1002.2 Accessible Routes. *Accessible* routes serving *amusement rides* shall comply with Chapter 4.
EXCEPTIONS: 1. In load or unload areas and on *amusement rides*, where compliance with 405.2 is not structurally or operationally feasible, *ramp* slope shall be permitted to be 1:8 maximum.
2. In load or unload areas and on *amusement rides*, handrails provided along walking surfaces complying with 403 and required on *ramps* complying with 405 shall not be required to comply with 505 where compliance is not structurally or operationally feasible.

> **Advisory 1002.2 Accessible Routes Exception 1.** Steeper slopes are permitted on accessible routes connecting the amusement ride in the load and unload position where it is "structurally or operationally infeasible." In most cases, this will be limited to areas where the accessible route leads directly to the amusement ride and where there are space limitations on the ride, not the queue line. Where possible, the least possible slope should be used on the accessible route that serves the amusement ride.

1002.3 Load and Unload Areas. A turning *space* complying with 304.2 and 304.3 shall be provided in load and unload areas.

1002.4 Wheelchair Spaces in Amusement Rides. *Wheelchair spaces* in *amusement rides* shall comply with 1002.4.

1002.4.1 Floor or Ground Surface. The floor or ground surface of *wheelchair spaces* shall be stable and firm.

1002.4.2 Slope. The floor or ground surface of *wheelchair spaces* shall have a slope not steeper than 1:48 when in the load and unload position.

1002.4.3 Gaps. Floors of *amusement rides* with *wheelchair spaces* and floors of load and unload areas shall be coordinated so that, when *amusement rides* are at rest in the load and unload

position, the vertical difference between the floors shall be within plus or minus 5/8 inches (16 mm) and the horizontal gap shall be 3 inches (75 mm) maximum under normal passenger load conditions.

EXCEPTION: Where compliance is not operationally or structurally feasible, *ramps*, bridge plates, or similar devices complying with the applicable requirements of 36 CFR 1192.83(c) shall be provided.

Advisory 1002.4.3 Gaps Exception. 36 CFR 1192.83(c) ADA Accessibility Guidelines for Transportation Vehicles - Light Rail Vehicles and Systems - Mobility Aid Accessibility is available at www.access-board.gov. It includes provisions for bridge plates and ramps that can be used at gaps between wheelchair spaces and floors of load and unload areas.

1002.4.4 Clearances. Clearances for *wheelchair spaces* shall comply with 1002.4.4.

EXCEPTIONS: 1. Where provided, securement devices shall be permitted to overlap required clearances.

2. *Wheelchair spaces* shall be permitted to be mechanically or manually repositioned.

3. *Wheelchair spaces* shall not be required to comply with 307.4.

Advisory 1002.4.4 Clearances Exception 3. This exception for protruding objects applies to the ride devices, not to circulation areas or accessible routes in the queue lines or the load and unload areas.

1002.4.4.1 Width and Length. *Wheelchair spaces* shall provide a clear width of 30 inches (760 mm) minimum and a clear length of 48 inches (1220 mm) minimum measured to 9 inches (230 mm) minimum above the floor surface.

1002.4.4.2 Side Entry. Where *wheelchair spaces* are entered only from the side, *amusement rides* shall be designed to permit sufficient maneuvering clearance for individuals using a wheelchair or mobility aid to enter and exit the ride.

Advisory 1002.4.4.2 Side Entry. The amount of clear space needed within the ride, and the size and position of the opening are interrelated. A 32 inch (815 mm) clear opening will not provide sufficient width when entered through a turn into an amusement ride. Additional space for maneuvering and a wider door will be needed where a side opening is centered on the ride. For example, where a 42 inch (1065 mm) opening is provided, a minimum clear space of 60 inches (1525 mm) in length and 36 inches (915mm) in depth is needed to ensure adequate space for maneuvering.

1002.4.4.3 Permitted Protrusions in Wheelchair Spaces. Objects are permitted to protrude a distance of 6 inches (150 mm) maximum along the front of the *wheelchair space*, where located 9 inches (230 mm) minimum and 27 inches (685 mm) maximum above the floor or ground surface of the *wheelchair space*. Objects are permitted to protrude a distance of 25 inches (635 mm) maximum along the front of the *wheelchair space*, where located more than 27 inches (685 mm) above the floor or ground surface of the *wheelchair space*.

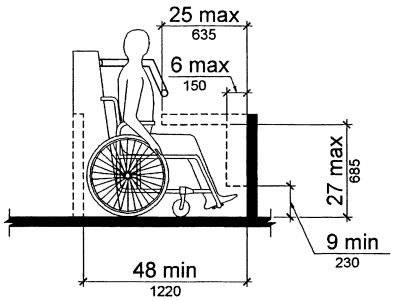

Figure 1002.4.4.3
Protrusions in Wheelchair Spaces in Amusement Rides

1002.4.5 Ride Entry. Openings providing entry to *wheelchair spaces* on *amusement rides* shall be 32 inches (815 mm) minimum clear.

1002.4.6 Approach. One side of the *wheelchair space* shall adjoin an *accessible* route when in the load and unload position.

1002.4.7 Companion Seats. Where the interior width of the *amusement ride* is greater than 53 inches (1345 mm), seating is provided for more than one rider, and the wheelchair is not required to be centered within the *amusement ride*, a companion seat shall be provided for each *wheelchair space*.

1002.4.7.1 Shoulder-to-Shoulder Seating. Where an *amusement ride* provides shoulder-to-shoulder seating, companion seats shall be shoulder-to-shoulder with the adjacent *wheelchair space*.

EXCEPTION: Where shoulder-to-shoulder companion seating is not operationally or structurally feasible, compliance with this requirement shall be required to the maximum extent practicable.

1002.5 Amusement Ride Seats Designed for Transfer. *Amusement ride seats* designed for transfer shall comply with 1002.5 when positioned for loading and unloading.

Advisory 1002.5 Amusement Ride Seats Designed for Transfer. The proximity of the clear floor or ground space next to an element and the height of the element one is transferring to are both critical for a safe and independent transfer. Providing additional clear floor or ground space both in front of and diagonal to the element will provide flexibility and will increase usability for a more diverse population of individuals with disabilities. Ride seats designed for transfer should involve only one transfer. Where possible, designers are encouraged to locate the ride seat no higher than 17 to 19 inches (430 to 485 mm) above the load and unload surface. Where greater distances are required for transfers, providing gripping surfaces, seat padding, and avoiding sharp objects in the path of transfer will facilitate the transfer.

1002.5.1 Clear Floor or Ground Space. A clear floor or ground *space* complying with 305 shall be provided in the load and unload area adjacent to the *amusement ride seats* designed for transfer.

1002.5.2 Transfer Height. The height of *amusement ride seats* designed for transfer shall be 14 inches (355 mm) minimum and 24 inches (610 mm) maximum measured from the surface of the load and unload area.

1002.5.3 Transfer Entry. Where openings are provided for transfer to *amusement ride seats*, the openings shall provide clearance for transfer from a wheelchair or mobility aid to the *amusement ride seat*.

1002.5.4 Wheelchair Storage Space. Wheelchair storage *spaces* complying with 305 shall be provided in or adjacent to unload areas for each required *amusement ride seat* designed for transfer and shall not overlap any required means of egress or *accessible* route.

1002.6 Transfer Devices for Use with Amusement Rides. *Transfer devices* for use with *amusement rides* shall comply with 1002.6 when positioned for loading and unloading.

Advisory 1002.6 Transfer Devices for Use with Amusement Rides. Transfer devices for use with amusement rides should permit individuals to make independent transfers to and from their wheelchairs or mobility devices. There are a variety of transfer devices available that could be adapted to provide access onto an amusement ride. Examples of devices that may provide for transfers include, but are not limited to, transfer systems, lifts, mechanized seats, and custom designed systems. Operators and designers have flexibility in developing designs that will facilitate individuals to transfer onto amusement rides. These systems or devices should be designed to be reliable and sturdy.

Designs that limit the number of transfers required from a wheelchair or mobility device to the ride seat are encouraged. When using a transfer device to access an amusement ride, the least number of transfers and the shortest distance is most usable. Where possible, designers are encouraged to locate the transfer device seat no higher than 17 to 19 inches (430 to 485 mm) above the load and unload surface. Where greater distances are required for transfers, providing gripping surfaces, seat padding, and avoiding sharp objects in the path of transfer will facilitate the transfer. Where a series of transfers are required to reach the amusement ride seat, each vertical transfer should not exceed 8 inches (205 mm).

1002.6.1 Clear Floor or Ground Space. A clear floor or ground *space* complying with 305 shall be provided in the load and unload area adjacent to the *transfer device*.

1002.6.2 Transfer Height. The height of *transfer device* seats shall be 14 inches (355 mm) minimum and 24 inches (610 mm) maximum measured from the load and unload surface.

1002.6.3 Wheelchair Storage Space. Wheelchair storage *spaces* complying with 305 shall be provided in or adjacent to unload areas for each required *transfer device* and shall not overlap any required means of egress or *accessible* route.

1003 Recreational Boating Facilities

1003.1 General. Recreational boating *facilities* shall comply with 1003.

1003.2 Accessible Routes. *Accessible* routes serving recreational boating *facilities*, including *gangways* and floating piers, shall comply with Chapter 4 except as modified by the exceptions in 1003.2.

1003.2.1 Boat Slips. *Accessible* routes serving *boat slips* shall be permitted to use the exceptions in 1003.2.1.

EXCEPTIONS: 1. Where an existing *gangway* or series of *gangways* is replaced or *altered*, an increase in the length of the *gangway* shall not be required to comply with 1003.2 unless required by 202.4.

2. *Gangways* shall not be required to comply with the maximum rise specified in 405.6.

3. Where the total length of a *gangway* or series of *gangways* serving as part of a required *accessible* route is 80 feet (24 m) minimum, *gangways* shall not be required to comply with 405.2.

4. Where *facilities* contain fewer than 25 *boat slips* and the total length of the *gangway* or series of *gangways* serving as part of a required *accessible* route is 30 feet (9145 mm) minimum, *gangways* shall not be required to comply with 405.2.

5. Where *gangways* connect to *transition plates*, landings specified by 405.7 shall not be required.

6. Where *gangways* and *transition plates* connect and are required to have handrails, handrail extensions shall not be required. Where handrail extensions are provided on *gangways* or *transition plates*, the handrail extensions shall not be required to be parallel with the ground or floor surface.

7. The *cross slope* specified in 403.3 and 405.3 for *gangways*, *transition plates*, and floating piers that are part of *accessible* routes shall be measured in the static position.

8. Changes in level complying with 303.3 and 303.4 shall be permitted on the surfaces of *gangways* and *boat launch ramps*.

Advisory 1003.2.1 Boat Slips Exception 3. The following example shows how exception 3 would be applied: A gangway is provided to a floating pier which is required to be on an accessible route. The vertical distance is 10 feet (3050 mm) between the elevation where the gangway departs the landside connection and the elevation of the pier surface at the lowest water level. Exception 3 permits the gangway to be 80 feet (24 m) long. Another design solution would be to have two 40 foot (12 m) plus continuous gangways joined together at a float, where the float (as the water level falls) will stop dropping at an elevation five feet below the landside connection. The length of transition plates would not be included in determining if the gangway(s) meet the requirements of the exception.

1003.2.2 Boarding Piers at Boat Launch Ramps. *Accessible* routes serving *boarding piers* at *boat launch ramps* shall be permitted to use the exceptions in 1003.2.2.

EXCEPTIONS: 1. *Accessible* routes serving floating *boarding piers* shall be permitted to use Exceptions 1, 2, 5, 6, 7 and 8 in 1003.2.1.

2. Where the total length of the *gangway* or series of *gangways* serving as part of a required *accessible* route is 30 feet (9145 mm) minimum, *gangways* shall not be required to comply with 405.2.

3. Where the *accessible* route serving a floating *boarding pier* or skid pier is located within a *boat launch ramp*, the portion of the *accessible* route located within the *boat launch ramp* shall not be required to comply with 405.

1003.3 Clearances. Clearances at *boat slips* and on *boarding piers* at *boat launch ramps* shall comply with 1003.3.

Advisory 1003.3 Clearances. Although the minimum width of the clear pier space is 60 inches (1525 mm), it is recommended that piers be wider than 60 inches (1525 mm) to improve the safety for persons with disabilities, particularly on floating piers.

1003.3.1 Boat Slip Clearance. *Boat slips* shall provide clear pier *space* 60 inches (1525 mm) wide minimum and at least as long as the *boat slips*. Each 10 feet (3050 mm) maximum of linear pier edge serving *boat slips* shall contain at least one continuous clear opening 60 inches (1525 mm) wide minimum.

EXCEPTIONS: 1. Clear pier *space* shall be permitted to be 36 inches (915 mm) wide minimum for a length of 24 inches (610 mm) maximum, provided that multiple 36 inch (915 mm) wide segments are separated by segments that are 60 inches (1525 mm) wide minimum and 60 inches (1525 mm) long minimum.

2. Edge protection shall be permitted at the continuous clear openings, provided that it is 4 inches (100 mm) high maximum and 2 inches (51 mm) wide maximum.

3. In existing piers, clear pier *space* shall be permitted to be located perpendicular to the *boat slip* and shall extend the width of the *boat slip*, where the *facility* has at least one *boat slip* complying with 1003.3, and further compliance with 1003.3 would result in a reduction in the number of *boat slips* available or result in a reduction of the widths of existing slips.

Advisory 1003.3.1 Boat Slip Clearance Exception 3. Where the conditions in exception 3 are satisfied, existing facilities are only required to have one accessible boat slip with a pier clearance which runs the length of the slip. All other accessible slips are allowed to have the required pier clearance at the head of the slip. Under this exception, at piers with perpendicular boat slips, the width of most "finger piers" will remain unchanged. However, where mooring systems for floating piers are replaced as part of pier alteration projects, an opportunity may exist for increasing accessibility. Piers may be reconfigured to allow an increase in the number of wider finger piers, and serve as accessible boat slips.

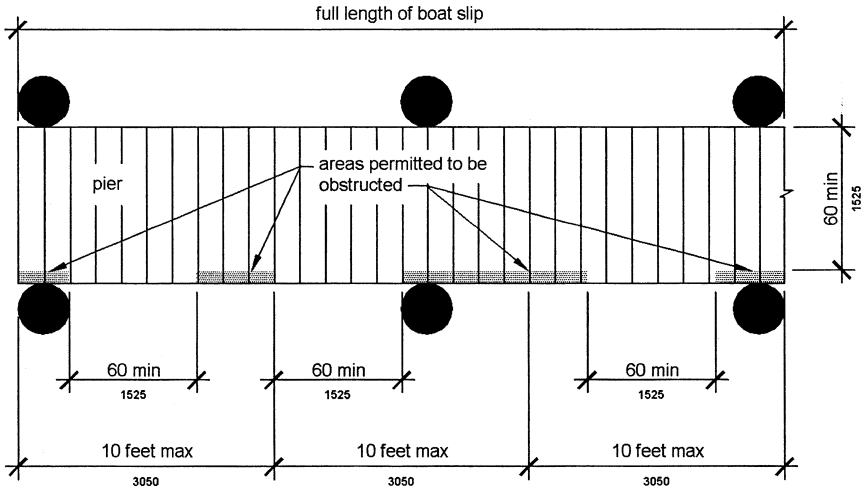

Figure 1003.3.1
Boat Slip Clearance

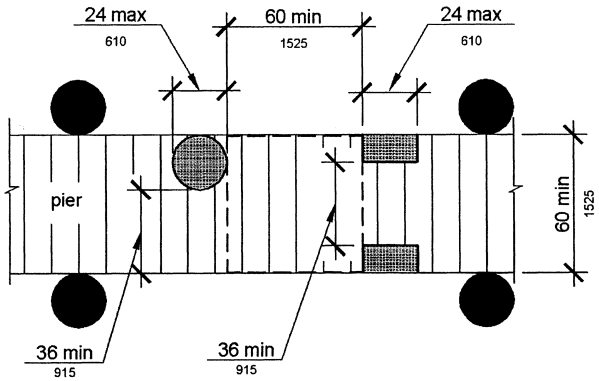

Figure 1003.3.1 (Exception 1)
Clear Pier Space Reduction at Boat Slips

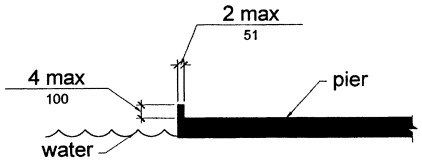

Figure 1003.3.1 (Exception 2)
Edge Protection at Boat Slips

1003.3.2 Boarding Pier Clearances. *Boarding piers* at *boat launch ramps* shall provide clear pier *space* 60 inches (1525 mm) wide minimum and shall extend the full length of the *boarding pier.* Every 10 feet (3050 mm) maximum of linear pier edge shall contain at least one continuous clear opening 60 inches (1525 mm) wide minimum.

EXCEPTIONS: 1. The clear pier *space* shall be permitted to be 36 inches (915 mm) wide minimum for a length of 24 inches (610 mm) maximum provided that multiple 36 inch (915 mm) wide segments are separated by segments that are 60 inches (1525 mm) wide minimum and 60 inches (1525 mm) long minimum.

2. Edge protection shall be permitted at the continuous clear openings provided that it is 4 inches (100 mm) high maximum and 2 inches (51 mm) wide maximum.

Advisory 1003.3.2 Boarding Pier Clearances. These requirements do not establish a minimum length for accessible boarding piers at boat launch ramps. The accessible boarding pier should have a length at least equal to that of other boarding piers provided at the facility. If no other boarding pier is provided, the pier would have a length equal to what would have been provided if no access requirements applied. The entire length of accessible boarding piers would be required to comply with the same technical provisions that apply to accessible boat slips. For example, at a launch ramp, if a 20 foot (6100 mm) long accessible boarding pier is provided, the entire 20 feet (6100 mm) must comply with the pier clearance requirements in 1003.3. Likewise, if a 60 foot (18 m) long accessible boarding pier is provided, the pier clearance requirements in 1003.3 would apply to the entire 60 feet (18 m).

The following example applies to a boat launch ramp boarding pier: A chain of floats is provided on a launch ramp to be used as a boarding pier which is required to be accessible by 1003.3.2. At high water, the entire chain is floating and a transition plate connects the first float to the surface of the launch ramp. As the water level decreases, segments of the chain end up resting on the launch ramp surface, matching the slope of the launch ramp.

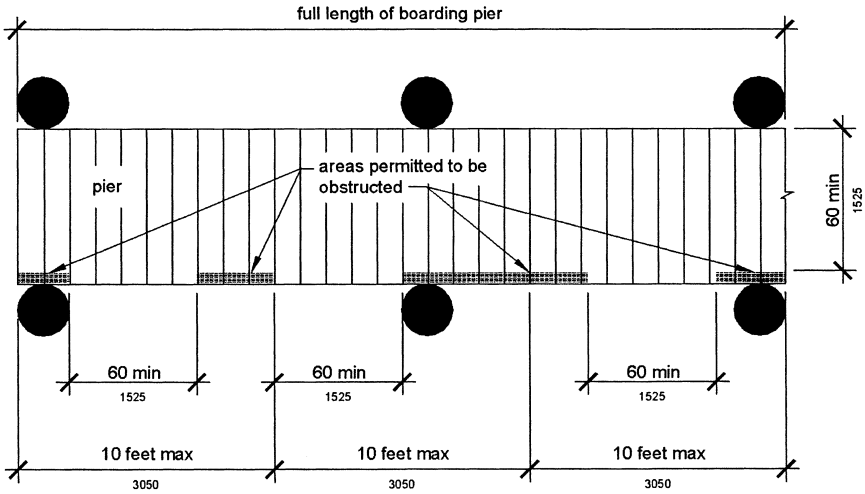

Figure 1003.3.2
Boarding Pier Clearance

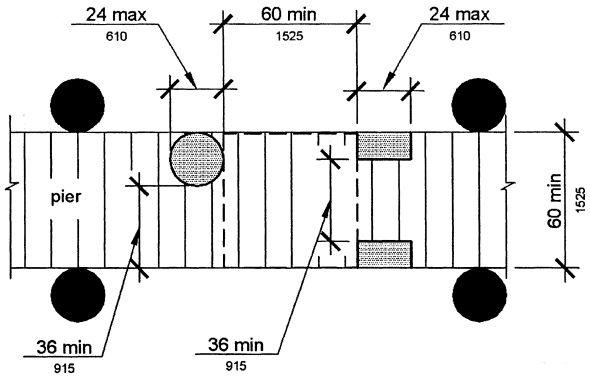

Figure 1003.3.2 (Exception 1)
Clear Pier Space Reduction at Boarding Piers

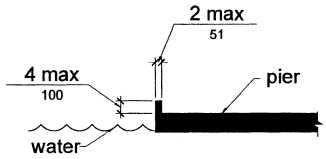

Figure 1003.3.2 (Exception 2)
Edge Protection at Boarding Piers

1004 Exercise Machines and Equipment

1004.1 Clear Floor Space. Exercise machines and equipment shall have a clear floor *space* complying with 305 positioned for transfer or for use by an individual seated in a wheelchair. Clear floor or ground *spaces* required at exercise machines and equipment shall be permitted to overlap.

> **Advisory 1004.1 Clear Floor Space.** One clear floor or ground space is permitted to be shared between two pieces of exercise equipment. To optimize space use, designers should carefully consider layout options such as connecting ends of the row and center aisle spaces. The position of the clear floor space may vary greatly depending on the use of the equipment or machine. For example, to provide access to a shoulder press machine, clear floor space next to the seat would be appropriate to allow for transfer. Clear floor space for a bench press machine designed for use by an individual seated in a wheelchair, however, will most likely be centered on the operating mechanisms.

1005 Fishing Piers and Platforms

1005.1 Accessible Routes. *Accessible* routes serving fishing piers and platforms, including *gangways* and floating piers, shall comply with Chapter 4.

EXCEPTIONS: 1. *Accessible* routes serving floating fishing piers and platforms shall be permitted to use Exceptions 1, 2, 5, 6, 7 and 8 in 1003.2.1.

2. Where the total length of the *gangway* or series of *gangways* serving as part of a required *accessible* route is 30 feet (9145 mm) minimum, *gangways* shall not be required to comply with 405.2.

1005.2 Railings. Where provided, railings, guards, or handrails shall comply with 1005.2.

1005.2.1 Height. At least 25 percent of the railings, guards, or handrails shall be 34 inches (865 mm) maximum above the ground or deck surface.

EXCEPTION: Where a guard complying with sections 1003.2.12.1 and 1003.2.12.2 of the International Building Code (2000 edition) or sections 1012.2 and 1012.3 of the International Building Code (2003 edition) (incorporated by reference, see "Referenced Standards" in Chapter 1) is provided, the guard shall not be required to comply with 1005.2.1.

1005.2.1.1 Dispersion. Railings, guards, or handrails required to comply with 1005.2.1 shall be dispersed throughout the fishing pier or platform.

Advisory 1005.2.1.1 Dispersion. Portions of the railings that are lowered to provide fishing opportunities for persons with disabilities must be located in a variety of locations on the fishing pier or platform to give people a variety of locations to fish. Different fishing locations may provide varying water depths, shade (at certain times of the day), vegetation, and proximity to the shoreline or bank.

1005.3 Edge Protection. Where railings, guards, or handrails complying with 1005.2 are provided, edge protection complying with 1005.3.1 or 1005.3.2 shall be provided.

Advisory 1005.3 Edge Protection. Edge protection is required only where railings, guards, or handrails are provided on a fishing pier or platform. Edge protection will prevent wheelchairs or other mobility devices from slipping off the fishing pier or platform. Extending the deck of the fishing pier or platform 12 inches (305 mm) where the 34 inch (865 mm) high railing is provided is an alternative design, permitting individuals using wheelchairs or other mobility devices to pull into a clear space and move beyond the face of the railing. In such a design, curbs or barriers are not required.

1005.3.1 Curb or Barrier. Curbs or barriers shall extend 2 inches (51 mm) minimum above the surface of the fishing pier or platform.

1005.3.2 Extended Ground or Deck Surface. The ground or deck surface shall extend 12 inches (305 mm) minimum beyond the inside face of the railing. Toe clearance shall be provided and shall

be 30 inches (760 mm) wide minimum and 9 inches (230 mm) minimum above the ground or deck surface beyond the railing.

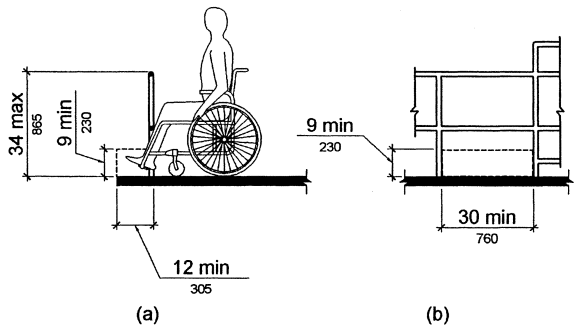

Figure 1005.3.2
Extended Ground or Deck Surface at Fishing Piers and Platforms

1005.4 Clear Floor or Ground Space. At each location where there are railings, guards, or handrails complying with 1005.2.1, a clear floor or ground *space* complying with 305 shall be provided. Where there are no railings, guards, or handrails, at least one clear floor or ground *space* complying with 305 shall be provided on the fishing pier or platform.

1005.5 Turning Space. At least one turning *space* complying with 304.3 shall be provided on fishing piers and platforms.

1006 Golf Facilities

1006.1 General. Golf *facilities* shall comply with 1006.

1006.2 Accessible Routes. *Accessible* routes serving *teeing grounds*, practice *teeing grounds*, putting greens, practice putting greens, teeing stations at driving ranges, course weather shelters, golf car rental areas, bag drop areas, and course toilet rooms shall comply with Chapter 4 and shall be 48 inches (1220 mm) wide minimum. Where handrails are provided, *accessible* routes shall be 60 inches (1525 mm) wide minimum.

EXCEPTION: Handrails shall not be required on golf courses. Where handrails are provided on golf courses, the handrails shall not be required to comply with 505.

Advisory 1006.2 Accessible Routes. The 48 inch (1220 mm) minimum width for the accessible route is necessary to ensure passage of a golf car on either the accessible route or the golf car passage. This is important where the accessible route is used to connect the golf car rental area, bag drop areas, practice putting greens, practice teeing grounds, course toilet rooms, and course weather shelters. These are areas outside the boundary of the golf course, but are areas where an individual using an adapted golf car may travel. A golf car passage may not be substituted for other accessible routes to be located outside the boundary of the course. For example, an accessible route connecting an accessible parking space to the entrance of a golf course clubhouse is not covered by this provision.

Providing a golf car passage will permit a person that uses a golf car to practice driving a golf ball from the same position and stance used when playing the game. Additionally, the space required for a person using a golf car to enter and maneuver within the teeing stations required to be accessible should be considered.

1006.3 Golf Car Passages. *Golf car passages* shall comply with 1006.3.

1006.3.1 Clear Width. The clear width of *golf car passages* shall be 48 inches (1220 mm) minimum.

1006.3.2 Barriers. Where curbs or other constructed barriers prevent golf cars from entering a fairway, openings 60 inches (1525 mm) wide minimum shall be provided at intervals not to exceed 75 yards (69 m).

1006.4 Weather Shelters. A clear floor or ground *space* 60 inches (1525 mm) minimum by 96 inches (2440 mm) minimum shall be provided within weather shelters.

1007 Miniature Golf Facilities

1007.1 General. Miniature golf *facilities* shall comply with 1007.

1007.2 Accessible Routes. *Accessible* routes serving holes on miniature golf courses shall comply with Chapter 4. *Accessible* routes located on playing surfaces of miniature golf holes shall be permitted to use the exceptions in 1007.2.

EXCEPTIONS: 1. Playing surfaces shall not be required to comply with 302.2.

2. Where *accessible* routes intersect playing surfaces of holes, a 1 inch (25 mm) maximum curb shall be permitted for a width of 32 inches (815 mm) minimum.

3. A slope not steeper than 1:4 for a 4 inch (100 mm) maximum rise shall be permitted.

4. *Ramp* landing slopes specified by 405.7.1 shall be permitted to be 1:20 maximum.

5. *Ramp* landing length specified by 405.7.3 shall be permitted to be 48 inches (1220 mm) long minimum.

6. *Ramp* landing size specified by 405.7.4 shall be permitted to be 48 inches (1220 mm) minimum by 60 inches (1525 mm) minimum.

7. Handrails shall not be required on holes. Where handrails are provided on holes, the handrails shall not be required to comply with 505.

1007.3 Miniature Golf Holes. Miniature golf holes shall comply with 1007.3.

1007.3.1 Start of Play. A clear floor or ground *space* 48 inches (1220 mm) minimum by 60 inches (1525 mm) minimum with slopes not steeper than 1:48 shall be provided at the start of play.

1007.3.2 Golf Club Reach Range Area. All areas within holes where golf balls rest shall be within 36 inches (915 mm) maximum of a clear floor or ground *space* 36 inches (915 mm) wide minimum and 48 inches (1220 mm) long minimum having a *running slope* not steeper than 1:20. The clear floor or ground *space* shall be served by an *accessible* route.

Advisory 1007.3.2 Golf Club Reach Range Area. The golf club reach range applies to all holes required to be accessible. This includes accessible routes provided adjacent to or, where provided, on the playing surface of the hole.

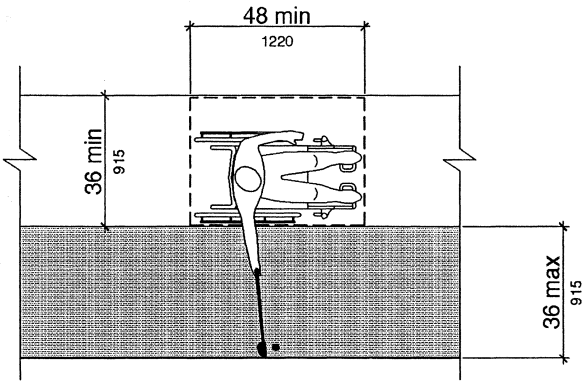

Note: Running Slope of Clear Floor or Ground Space Not Steeper Than 1:20

Figure 1007.3.2
Golf Club Reach Range Area

1008 Play Areas

1008.1 General. *Play areas* shall comply with 1008.

1008.2 Accessible Routes. *Accessible* routes serving *play areas* shall comply with Chapter 4 and 1008.2 and shall be permitted to use the exceptions in 1008.2.1 through 1008.2.3. Where *accessible* routes serve *ground level play components*, the vertical clearance shall be 80 inches high (2030 mm) minimum.

1008.2.1 Ground Level and Elevated Play Components. *Accessible* routes serving *ground level play components* and *elevated play components* shall be permitted to use the exceptions in 1008.2.1.

EXCEPTIONS: 1. Transfer systems complying with 1008.3 shall be permitted to connect *elevated play components* except where 20 or more *elevated play components* are provided no more than 25 percent of the *elevated play components* shall be permitted to be connected by transfer systems.

2. Where transfer systems are provided, an *elevated play component* shall be permitted to connect to another *elevated play component* as part of an *accessible* route.

1008.2.2 Soft Contained Play Structures. *Accessible* routes serving *soft contained play structures* shall be permitted to use the exception in 1008.2.2.

EXCEPTION: Transfer systems complying with 1008.3 shall be permitted to be used as part of an *accessible* route.

1008.2.3 Water Play Components. *Accessible* routes serving water *play components* shall be permitted to use the exceptions in 1008.2.3.

EXCEPTIONS: 1. Where the surface of the *accessible* route, clear floor or ground *spaces*, or turning *spaces* serving water *play components* is submerged, compliance with 302, 403.3, 405.2, 405.3, and 1008.2.6 shall not be required.

2. Transfer systems complying with 1008.3 shall be permitted to connect *elevated play components* in water.

Advisory 1008.2.3 Water Play Components. Personal wheelchairs and mobility devices may not be appropriate for submerging in water when using play components in water. Some may have batteries, motors, and electrical systems that when submerged in water may cause damage to the personal mobility device or wheelchair or may contaminate the water. Providing an aquatic wheelchair made of non-corrosive materials and designed for access into the water will protect the water from contamination and avoid damage to personal wheelchairs.

1008.2.4 Clear Width. *Accessible* routes connecting *play components* shall provide a clear width complying with 1008.2.4.

1008.2.4.1 Ground Level. At ground level, the clear width of *accessible* routes shall be 60 inches (1525 mm) minimum.

EXCEPTIONS: 1. In *play areas* less than 1000 square feet (93 m^2), the clear width of *accessible* routes shall be permitted to be 44 inches (1120 mm) minimum, if at least one turning *space* complying with 304.3 is provided where the restricted *accessible* route exceeds 30 feet (9145 mm) in length.

2. The clear width of *accessible* routes shall be permitted to be 36 inches (915 mm) minimum for a distance of 60 inches (1525 mm) maximum provided that multiple reduced width segments are separated by segments that are 60 inches (1525 mm) wide minimum and 60 inches (1525 mm) long minimum.

1008.2.4.2 Elevated. The clear width of *accessible* routes connecting *elevated play components* shall be 36 inches (915 mm) minimum.

EXCEPTIONS: 1. The clear width of *accessible* routes connecting *elevated play components* shall be permitted to be reduced to 32 inches (815 mm) minimum for a distance of 24 inches (610 mm) maximum provided that reduced width segments are separated by segments that are 48 inches (1220 mm) long minimum and 36 inches (915 mm) wide minimum.

2. The clear width of transfer systems connecting *elevated play components* shall be permitted to be 24 inches (610 mm) minimum.

1008.2.5 Ramps. Within *play areas*, *ramps* connecting *ground level play components* and *ramps* connecting *elevated play components* shall comply with 1008.2.5.

1008.2.5.1 Ground Level. *Ramp* runs connecting *ground level play components* shall have a *running slope* not steeper than 1:16.

1008.2.5.2 Elevated. The rise for any *ramp* run connecting *elevated play components* shall be 12 inches (305 mm) maximum.

1008.2.5.3 Handrails. Where required on *ramps* serving *play components*, the handrails shall comply with 505 except as modified by 1008.2.5.3.

EXCEPTIONS: 1. Handrails shall not be required on *ramps* located within ground level *use zones*.

2. Handrail extensions shall not be required.

1008.2.5.3.1 Handrail Gripping Surfaces. Handrail gripping surfaces with a circular cross section shall have an outside diameter of 0.95 inch (24 mm) minimum and 1.55 inches (39 mm) maximum. Where the shape of the gripping surface is non-circular, the handrail shall provide an equivalent gripping surface.

1008.2.5.3.2 Handrail Height. The top of handrail gripping surfaces shall be 20 inches (510 mm) minimum and 28 inches (710 mm) maximum above the *ramp* surface.

1008.2.6 Ground Surfaces. Ground surfaces on *accessible* routes, clear floor or ground *spaces*, and turning *spaces* shall comply with 1008.2.6.

Advisory 1008.2.6 Ground Surfaces. Ground surfaces must be inspected and maintained regularly to ensure continued compliance with the ASTM F 1951 standard. The type of surface material selected and play area use levels will determine the frequency of inspection and maintenance activities.

1008.2.6.1 Accessibility. Ground surfaces shall comply with ASTM F 1951 (incorporated by reference, see "Referenced Standards" in Chapter 1). Ground surfaces shall be inspected and maintained regularly and frequently to ensure continued compliance with ASTM F 1951.

1008.2.6.2 Use Zones. Ground surfaces located within *use zones* shall comply with ASTM F 1292 (1999 edition or 2004 edition) (incorporated by reference, see "Referenced Standards" in Chapter 1).

1008.3 Transfer Systems. Where transfer systems are provided to connect to *elevated play components*, transfer systems shall comply with 1008.3.

> **Advisory 1008.3 Transfer Systems.** Where transfer systems are provided, consideration should be given to the distance between the transfer system and the elevated play components. Moving between a transfer platform and a series of transfer steps requires extensive exertion for some children. Designers should minimize the distance between the points where a child transfers from a wheelchair or mobility device and where the elevated play components are located. Where elevated play components are used to connect to another elevated play component instead of an accessible route, careful consideration should be used in the selection of the play components used for this purpose.

1008.3.1 Transfer Platforms. Transfer platforms shall be provided where transfer is intended from wheelchairs or other mobility aids. Transfer platforms shall comply with 1008.3.1.

1008.3.1.1 Size. Transfer platforms shall have level surfaces 14 inches (355 mm) deep minimum and 24 inches (610 mm) wide minimum.

1008.3.1.2 Height. The height of transfer platforms shall be 11 inches (280 mm) minimum and 18 inches (455 mm) maximum measured to the top of the surface from the ground or floor surface.

1008.3.1.3 Transfer Space. A transfer *space* complying with 305.2 and 305.3 shall be provided adjacent to the transfer platform. The 48 inch (1220 mm) long minimum dimension of the transfer *space* shall be centered on and parallel to the 24 inch (610 mm) long minimum side of the transfer platform. The side of the transfer platform serving the transfer *space* shall be unobstructed.

1008.3.1.4 Transfer Supports. At least one means of support for transferring shall be provided.

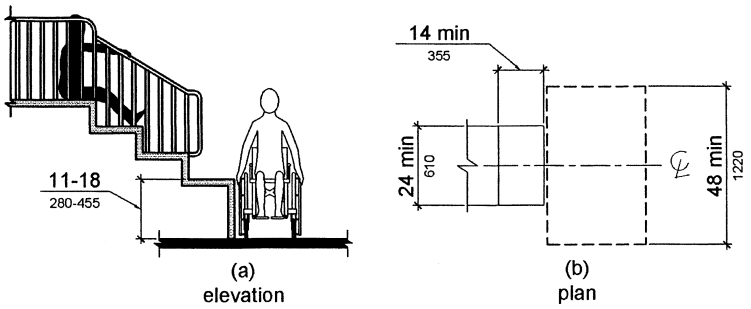

Figure 1008.3.1
Transfer Platforms

1008.3.2 Transfer Steps. Transfer steps shall be provided where movement is intended from transfer platforms to levels with *elevated play components* required to be on *accessible* routes. Transfer steps shall comply with 1008.3.2.

1008.3.2.1 Size. Transfer steps shall have level surfaces 14 inches (355 mm) deep minimum and 24 inches (610 mm) wide minimum.

1008.3.2.2 Height. Each transfer step shall be 8 inches (205 mm) high maximum.

1008.3.2.3 Transfer Supports. At least one means of support for transferring shall be provided.

Advisory 1008.3.2.3 Transfer Supports. Transfer supports are required on transfer platforms and transfer steps to assist children when transferring. Some examples of supports include a rope loop, a loop type handle, a slot in the edge of a flat horizontal or vertical member, poles or bars, or D rings on the corner posts.

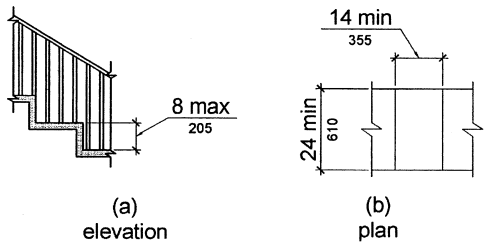

Figure 1008.3.2
Transfer Steps

1008.4 Play Components. *Ground level play components* on *accessible* routes and *elevated play components* connected by *ramps* shall comply with 1008.4.

1008.4.1 Turning Space. At least one turning *space* complying with 304 shall be provided on the same level as *play components*. Where swings are provided, the turning *space* shall be located immediately adjacent to the swing.

1008.4.2 Clear Floor or Ground Space. Clear floor or ground *space* complying with 305.2 and 305.3 shall be provided at *play components*.

Advisory 1008.4.2 Clear Floor or Ground Space. Clear floor or ground spaces, turning spaces, and accessible routes are permitted to overlap within play areas. A specific location has not been designated for the clear floor or ground spaces or turning spaces, except swings, because each play component may require that the spaces be placed in a unique location. Where play components include a seat or entry point, designs that provide for an unobstructed transfer from a wheelchair or other mobility device are recommended. This will enhance the ability of children with disabilities to independently use the play component.

When designing play components with manipulative or interactive features, consider appropriate reach ranges for children seated in wheelchairs. The following table provides guidance on reach ranges for children seated in wheelchairs. These dimensions apply to either forward or side reaches. The reach ranges are appropriate for use with those play components that children seated in wheelchairs may access and reach. Where transfer systems provide access to elevated play components, the reach ranges are not appropriate.

Children's Reach Ranges

Forward or Side Reach	Ages 3 and 4	Ages 5 through 8	Ages 9 through 12
High (maximum)	36 in (915 mm)	40 in (1015 mm)	44 in (1120 mm)
Low (minimum)	20 in (510 mm)	18 in (455 mm)	16 in (405 mm)

1008.4.3 Play Tables. Where play tables are provided, knee clearance 24 inches (610 mm) high minimum, 17 inches deep (430 mm) minimum, and 30 inches (760 mm) wide minimum shall be provided. The tops of rims, curbs, or other obstructions shall be 31 inches (785 mm) high maximum.

EXCEPTION: Play tables designed and constructed primarily for children 5 years and younger shall not be required to provide knee clearance where the clear floor or ground *space* required by 1008.4.2 is arranged for a parallel approach.

1008.4.4 Entry Points and Seats. Where *play components* require transfer to entry points or seats, the entry points or seats shall be 11 inches (280 mm) minimum and 24 inches (610 mm) maximum from the clear floor or ground *space*.

EXCEPTION: Entry points of slides shall not be required to comply with 1008.4.4.

1008.4.5 Transfer Supports. Where *play components* require transfer to entry points or seats, at least one means of support for transferring shall be provided.

1009 Swimming Pools, Wading Pools, and Spas

1009.1 General. Where provided, pool lifts, sloped entries, transfer walls, transfer systems, and pool stairs shall comply with 1009.

1009.2 Pool Lifts. Pool lifts shall comply with 1009.2.

Advisory 1009.2 Pool Lifts. There are a variety of seats available on pool lifts ranging from sling seats to those that are preformed or molded. Pool lift seats with backs will enable a larger population of persons with disabilities to use the lift. Pool lift seats that consist of materials that resist corrosion and provide a firm base to transfer will be usable by a wider range of people with disabilities. Additional options such as armrests, head rests, seat belts, and leg support will enhance accessibility and better accommodate people with a wide range of disabilities.

1009.2.1 Pool Lift Location. Pool lifts shall be located where the water level does not exceed 48 inches (1220 mm).

EXCEPTIONS: 1. Where the entire pool depth is greater than 48 inches (1220 mm), compliance with 1009.2.1 shall not be required.

2. Where multiple pool lift locations are provided, no more than one pool lift shall be required to be located in an area where the water level is 48 inches (1220 mm) maximum.

1009.2.2 Seat Location. In the raised position, the centerline of the seat shall be located over the deck and 16 inches (405 mm) minimum from the edge of the pool. The deck surface between the centerline of the seat and the pool edge shall have a slope not steeper than 1:48.

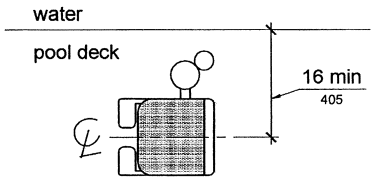

Figure 1009.2.2
Pool Lift Seat Location

1009.2.3 Clear Deck Space. On the side of the seat opposite the water, a clear deck *space* shall be provided parallel with the seat. The *space* shall be 36 inches (915 mm) wide minimum and shall extend forward 48 inches (1220 mm) minimum from a line located 12 inches (305 mm) behind the rear edge of the seat. The clear deck *space* shall have a slope not steeper than 1:48.

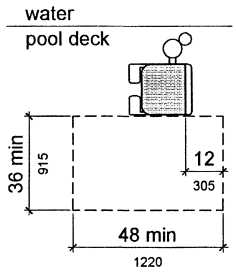

Figure 1009.2.3
Clear Deck Space at Pool Lifts

1009.2.4 Seat Height. The height of the lift seat shall be designed to allow a stop at 16 inches (405 mm) minimum to 19 inches (485 mm) maximum measured from the deck to the top of the seat surface when in the raised (load) position.

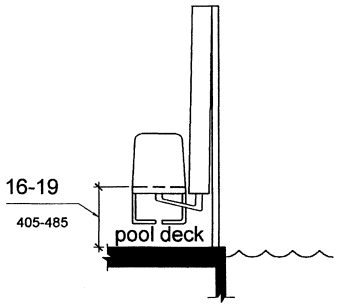

Figure 1009.2.4
Pool Lift Seat Height

1009.2.5 Seat Width. The seat shall be 16 inches (405 mm) wide minimum.

1009.2.6 Footrests and Armrests. Footrests shall be provided and shall move with the seat. If provided, the armrest positioned opposite the water shall be removable or shall fold clear of the seat when the seat is in the raised (load) position.

EXCEPTION: Footrests shall not be required on pool lifts provided in spas.

1009.2.7 Operation. The lift shall be capable of unassisted operation from both the deck and water levels. Controls and operating mechanisms shall be unobstructed when the lift is in use and shall comply with 309.4.

> **Advisory 1009.2.7 Operation.** Pool lifts must be capable of unassisted operation from both the deck and water levels. This will permit a person to call the pool lift when the pool lift is in the opposite position. It is extremely important for a person who is swimming alone to be able to call the pool lift when it is in the up position so he or she will not be stranded in the water for extended periods of time awaiting assistance. The requirement for a pool lift to be independently operable does not preclude assistance from being provided.

1009.2.8 Submerged Depth. The lift shall be designed so that the seat will submerge to a water depth of 18 inches (455 mm) minimum below the stationary water level.

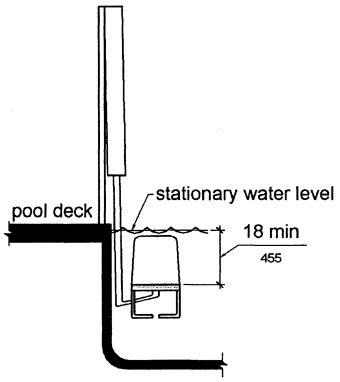

Figure 1009.2.8
Pool Lift Submerged Depth

1009.2.9 Lifting Capacity. Single person pool lifts shall have a weight capacity of 300 pounds. (136 kg) minimum and be capable of sustaining a static load of at least one and a half times the rated load.

> **Advisory 1009.2.9 Lifting Capacity.** Single person pool lifts must be capable of supporting a minimum weight of 300 pounds (136 kg) and sustaining a static load of at least one and a half times the rated load. Pool lifts should be provided that meet the needs of the population they serve. Providing a pool lift with a weight capacity greater than 300 pounds (136 kg) may be advisable.

1009.3 Sloped Entries. Sloped entries shall comply with 1009.3.

> **Advisory 1009.3 Sloped Entries.** Personal wheelchairs and mobility devices may not be appropriate for submerging in water. Some may have batteries, motors, and electrical systems that when submerged in water may cause damage to the personal mobility device or wheelchair or may contaminate the pool water. Providing an aquatic wheelchair made of non-corrosive materials and designed for access into the water will protect the water from contamination and avoid damage to personal wheelchairs or other mobility aids.

1009.3.1 Sloped Entries. Sloped entries shall comply with Chapter 4 except as modified in 1109.3.1 through 1109.3.3.

EXCEPTION: Where sloped entries are provided, the surfaces shall not be required to be slip resistant.

1009.3.2 Submerged Depth. Sloped entries shall extend to a depth of 24 inches (610 mm) minimum and 30 inches (760 mm) maximum below the stationary water level. Where landings are required by 405.7, at least one landing shall be located 24 inches (610 mm) minimum and 30 inches (760 mm) maximum below the stationary water level.

EXCEPTION: In wading pools, the sloped entry and landings, if provided, shall extend to the deepest part of the wading pool.

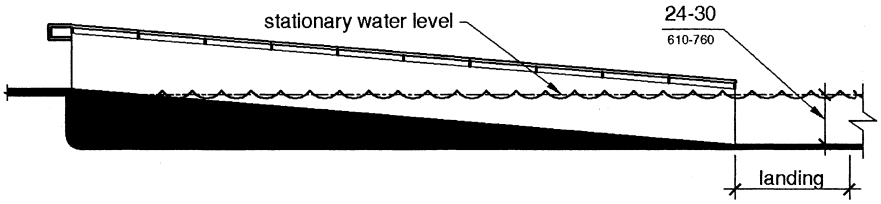

Figure 1009.3.2
Sloped Entry Submerged Depth

1009.3.3 Handrails. At least two handrails complying with 505 shall be provided on the sloped entry. The clear width between required handrails shall be 33 inches (840 mm) minimum and 38 inches (965 mm) maximum.

EXCEPTIONS: 1. Handrail extensions specified by 505.10.1 shall not be required at the bottom landing serving a sloped entry.

2. Where a sloped entry is provided for wave action pools, leisure rivers, sand bottom pools, and other pools where user access is limited to one area, the handrails shall not be required to comply with the clear width requirements of 1009.3.3.

3. Sloped entries in wading pools shall not be required to provide handrails complying with 1009.3.3. If provided, handrails on sloped entries in wading pools shall not be required to comply with 505.

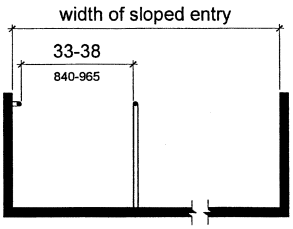

Figure 1009.3.3
Handrails for Sloped Entry

1009.4 Transfer Walls. Transfer walls shall comply with 1009.4.

1009.4.1 Clear Deck Space. A clear deck *space* of 60 inches (1525 mm) minimum by 60 inches (1525 mm) minimum with a slope not steeper than 1:48 shall be provided at the base of the transfer wall. Where one grab bar is provided, the clear deck *space* shall be centered on the grab bar. Where two grab bars are provided, the clear deck *space* shall be centered on the clearance between the grab bars.

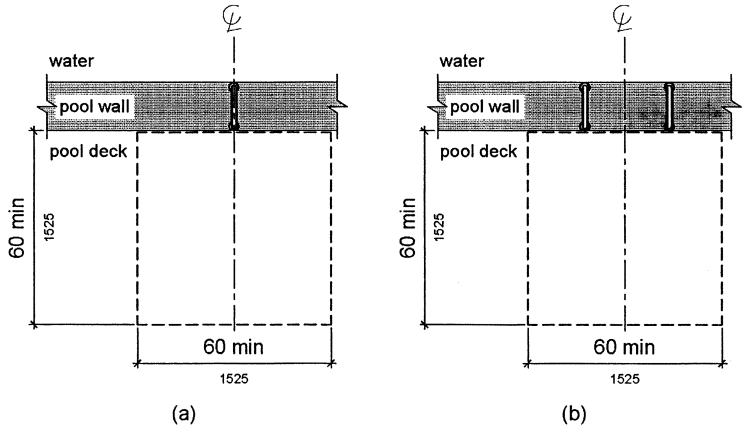

Figure 1009.4.1
Clear Deck Space at Transfer Walls

1009.4.2 Height. The height of the transfer wall shall be 16 inches (405 mm) minimum and 19 inches (485 mm) maximum measured from the deck.

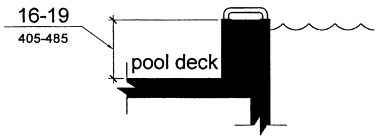

Figure 1009.4.2
Transfer Wall Height

1009.4.3 Wall Depth and Length. The depth of the transfer wall shall be 12 inches (305 mm) minimum and 16 inches (405 mm) maximum. The length of the transfer wall shall be 60 inches (1525 mm) minimum and shall be centered on the clear deck *space*.

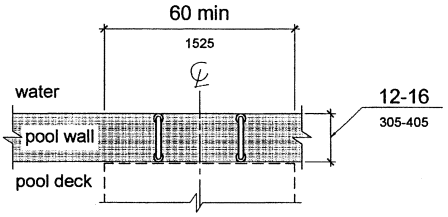

Figure 1009.4.3
Depth and Length of Transfer Walls

1009.4.4 Surface. Surfaces of transfer walls shall not be sharp and shall have rounded edges.

1009.4.5 Grab Bars. At least one grab bar complying with 609 shall be provided on the transfer wall. Grab bars shall be perpendicular to the pool wall and shall extend the full depth of the transfer wall. The top of the gripping surface shall be 4 inches (100 mm) minimum and 6 inches (150 mm) maximum above transfer walls. Where one grab bar is provided, clearance shall be 24 inches (610 mm) minimum on both sides of the grab bar. Where two grab bars are provided, clearance between grab bars shall be 24 inches (610 mm) minimum.

EXCEPTION: Grab bars on transfer walls shall not be required to comply with 609.4.

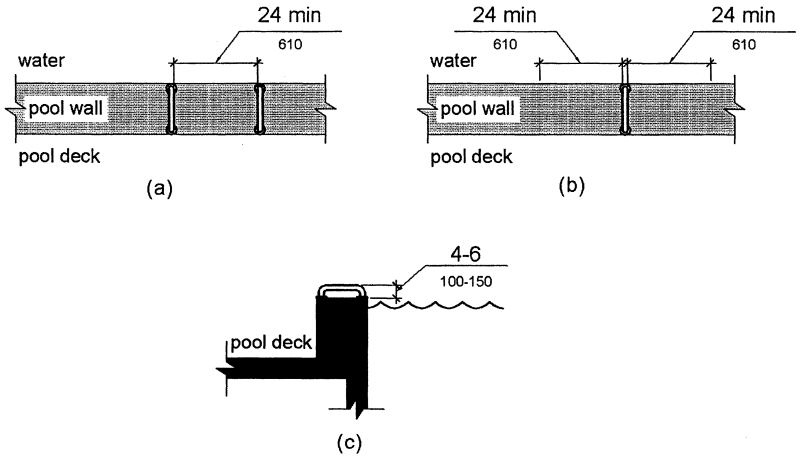

Figure 1009.4.5
Grab Bars for Transfer Walls

1009.5 Transfer Systems. Transfer systems shall comply with 1009.5.

1009.5.1 Transfer Platform. A transfer platform shall be provided at the head of each transfer system. Transfer platforms shall provide 19 inches (485 mm) minimum clear depth and 24 inches (610 mm) minimum clear width.

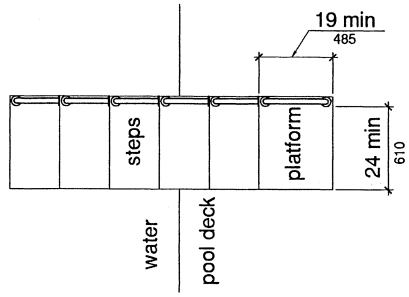

Figure 1009.5.1
Size of Transfer Platform

1009.5.2 Transfer Space. A transfer *space* of 60 inches (1525 mm) minimum by 60 inches (1525 mm) minimum with a slope not steeper than 1:48 shall be provided at the base of the transfer platform surface and shall be centered along a 24 inch (610 mm) minimum side of the transfer platform. The side of the transfer platform serving the transfer *space* shall be unobstructed.

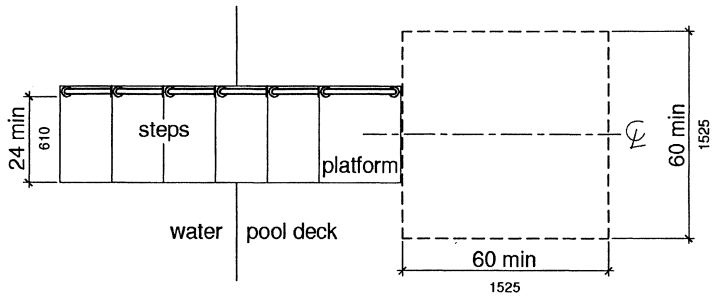

Figure 1009.5.2
Clear Deck Space at Transfer Platform

1009.5.3 Height. The height of the transfer platform shall comply with 1009.4.2.

1009.5.4 Transfer Steps. Transfer step height shall be 8 inches (205 mm) maximum. The surface of the bottom tread shall extend to a water depth of 18 inches (455 mm) minimum below the stationary water level.

> **Advisory 1009.5.4 Transfer Steps.** Where possible, the height of the transfer step should be minimized to decrease the distance an individual is required to lift up or move down to reach the next step to gain access.

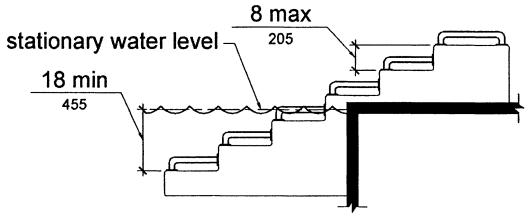

Figure 1009.5.4
Transfer Steps

1009.5.5 Surface. The surface of the transfer system shall not be sharp and shall have rounded edges.

1009.5.6 Size. Each transfer step shall have a tread clear depth of 14 inches (355 mm) minimum and 17 inches (430 mm) maximum and shall have a tread clear width of 24 inches (610 mm) minimum.

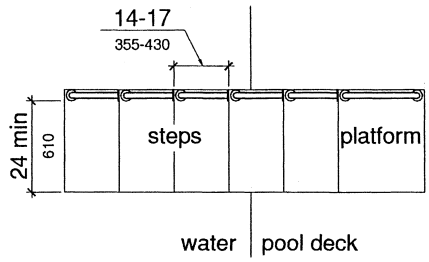

Figure 1009.5.6
Size of Transfer Steps

1009.5.7 Grab Bars. At least one grab bar on each transfer step and the transfer platform or a continuous grab bar serving each transfer step and the transfer platform shall be provided. Where a grab bar is provided on each step, the tops of gripping surfaces shall be 4 inches (100 mm) minimum and 6 inches (150 mm) maximum above each step and transfer platform. Where a continuous grab bar is provided, the top of the gripping surface shall be 4 inches (100 mm) minimum and 6 inches (150 mm) maximum above the step nosing and transfer platform. Grab bars shall comply with 609 and be located on at least one side of the transfer system. The grab bar located at the transfer platform shall not obstruct transfer.

EXCEPTION: Grab bars on transfer systems shall not be required to comply with 609.4.

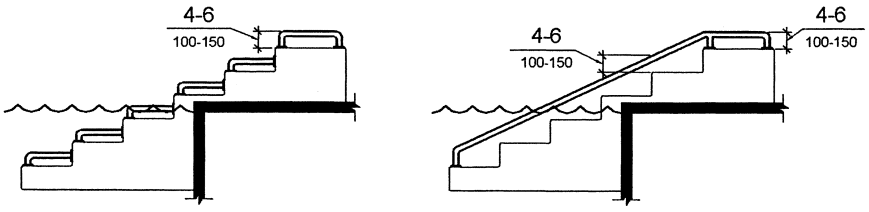

(a)
individual grab bars

(b)
continuous grab bars

Figure 1009.5.7
Grab Bars

1009.6 Pool Stairs. Pool stairs shall comply with 1009.6.

1009.6.1 Pool Stairs. Pool stairs shall comply with 504.
EXCEPTION: Pool step riser heights shall not be required to be 4 inches (100 mm) high minimum and 7 inches (180 mm) high maximum provided that riser heights are uniform.

1009.6.2 Handrails. The width between handrails shall be 20 inches (510 mm) minimum and 24 inches (610 mm) maximum. Handrail extensions required by 505.10.3 shall not be required on pool stairs.

1010 Shooting Facilities with Firing Positions

1010.1 Turning Space. A circular turning *space* 60 inches (1525 mm) diameter minimum with slopes not steeper than 1:48 shall be provided at shooting facilities with firing positions.

[69 FR 44151, July 23, 2004, as amended at 70 FR 45298, Aug. 5, 2005]